Mazda MPV Workshop Manual Supplement

FOREWORD

This manual contains on-vehicle service and diagnosis for the Mazda MPV.

For proper repair and maintenance, a thorough familiarization with this manual is important, and it should always be kept in a handy place for quick and easy reference.

All the contents of this manual, including drawings and specifications, are the latest available at the time of printing.
As modifications affecting repair or maintenance occur, relevant information supplementary to this volume will be made available at Mazda dealers. This manual should be kept up-to-date.

Mazda Motor Corporation reserves the right to alter the specifications and contents of this manual without obligation or advance notice.

All rights reserved. No part of this book may be reproduced or used in any form or by any means, electronic or mechanical—including photocopying and recording and the use of any kind of information storage and retrieval system—without permission in writing.

Mazda Motor Corporation
HIROSHIMA, JAPAN

APPLICATION:
This manual is applicable to vehicles beginning with the Vehicle Identification Numbers (VIN), and related materials shown on the following page.

CONTENTS

Title		Section
General Information		GI
Engine	FS	B1
	GY, AJ	B2
	L3	B3
	MZR-CD (RF Turbo)	B4
Lubrication System		D
Cooling System		E
Fuel and Emission Control Systems	FS	F1
	GY	F2
	L3	F3
	AJ	F4
	MZR-CD (RF Turbo)	F5
Engine Electrical System		G
Clutch		H
Manual Transaxle	G15M–R	J1
	A65M–R	J2
Automatic Transaxle	GF4A–EL	K1
	JA5A–EL	K2
Front and Rear Axles		M
Steering System		N
Braking System		P
Suspension		R
Body		S
Body Electrical System		T
Heater and Air Conditioner Systems		U
Technical Data		TD
Special Tools		ST

There are explanation given only for the sections marked with shadow ( ).

© 2002 Mazda Motor Corporation
PRINTED IN THE NETHERLANDS, APRIL 2002
1737–1E–02D

VEHICLE IDENTIFICATION NUMBERS (VIN)

European (L.H.D.) specs.

JMZ	LW1932*#	200001—
JMZ	LW19R2*#	200001—
JMZ	LW19J7*#	200001—

U.K. specs.

JMZ	LW19320#	200001—
JMZ	LW19R20#	200001—

Australian specs.

JM0	LW10J200	200001—

General (L.H.D. R.H.D.) specs.

JM6	LW10J200	200001—
JM8	LW28A**#	200001—
JM8	LW28J**#	200001—

RELATED MATERIALS

Mazda MPV Training Manual (Australian, European (L.H.D. U.K.), General (L.H.D.) specs.) 3340–1*–99F
Mazda MPV Workshop Manual (Australian, European (L.H.D. U.K.), General (L.H.D.) specs.) 1666–1*–99F
Mazda MPV Workshop Manual Supplement (European (L.H.D. U.K.), General (L.H.D.) specs.) 1700–1*–00H
Engine Workshop Manual L8 LF L3 . . . . . 1731–1*–02C
Engine Workshop Manual MZR–CD (RF Turbo) 1744–1*–02D
Engine Workshop Manual AJ 1743–1*–02D
Manual Transaxle Workshop Manual G25M–R 1441–10–94F
Manual Transaxle Workshop Manual A65M–R 1739–1E–02D
Automatic Transaxle Workshop Manual JA5A–EL . . . 1738–1*–02D
Mazda MPV Wiring Diagram (European (L.H.D.) specs.) 5544–1E–02D
Mazda MPV Wiring Diagram (U.K. specs.) 5545–1E–02D
Mazda MPV Wiring Diagram (Australian, General (R.H.D.) specs.) 5546–1*–02D
Mazda MPV Wiring Diagram (General (L.H.D.) specs.) 5547–10–02D
Mazda MPV Bodyshop Manual (Australian, European (L.H.D. U.K.), General (L.H.D.) specs.) 3341–1*–99F
EOBD Training Manual 3345–1*–00B

* : Indicates the printing location
- A—Australia
- E—Europe
- 0—Japan

WARNING

Servicing a vehicle can be dangerous. If you have not received service-related training, the risks of injury, property damage, and failure of servicing increase. The recommended servicing procedures for the vehicle in this workshop manual were developed with Mazda-trained technicians in mind. This manual may be useful to non-Mazda trained technicians, but a technician with our service-related training and experience will be at less risk when performing service operations. However, all users of this manual are expected to at least know general safety procedures.

This manual contains "Warnings" and "Cautions" applicable to risks not normally encountered in a general technician's experience. They should be followed to reduce the risk of injury and the risk that improper service or repair may damage the vehicle or render it unsafe. It is also important to understand that the "Warnings" and "Cautions" are not exhaustive. It is impossible to warn of all the hazardous consequences that might result from failure to follow the procedures.

The procedures recommended and described in this manual are effective methods of performing service and repair. Some require tools specifically designed for a specific purpose. Persons using procedures and tools which are not recommended by Mazda Motor Corporation must satisfy themselves thoroughly that neither personal safety nor safety of the vehicle will be jeopardized.

The contents of this manual, including drawings and specifications, are the latest available at the time of printing, and Mazda Motor Corporation reserves the right to change the vehicle designs and alter the contents of this manual without notice and without incurring obligation.

Parts should be replaced with genuine Mazda replacement parts or with parts which match the quality of genuine Mazda replacement parts. Persons using replacement parts of lesser quality than that of genuine Mazda replacement parts must satisfy themselves thoroughly that neither personal safety nor safety of the vehicle will be jeopardized.

Mazda Motor Corporation is not responsible for any problems which may arise from the use of this manual. The cause of such problems includes but is not limited to insufficient service-related training, use of improper tools, use of replacement parts of lesser quality than that of genuine Mazda replacement parts, or not being aware of any revision of this manual.

GENERAL INFORMATION

VIN CODE GI-2
VIN CODE GI-2
HOW TO USE THIS MANUAL GI-3
RANGE OF TOPICS GI-3
FUNDAMENTAL PROCEDURES GI-4
SST GI-4
ELECTRICAL SYSTEM GI-4
CONNECTORS GI-4
IDENTIFICATION NUMBER LOCATIONS GI-6
ENGINE IDENTIFICATION NUMBER GI-6
NEW STANDARDS GI-7
NEW STANDARDS TABLE GI-7
ABBREVIATIONS GI-9
ABBREVIATIONS TABLE GI-9
SCHEDULED MAINTENANCE GI-10
SCHEDULED MAINTENANCE TABLE GI-10

VIN CODE

VIN CODE

AME200800021W02

Europe (L.H.D. U.K.), Australian, General (R.H.D.) specs.

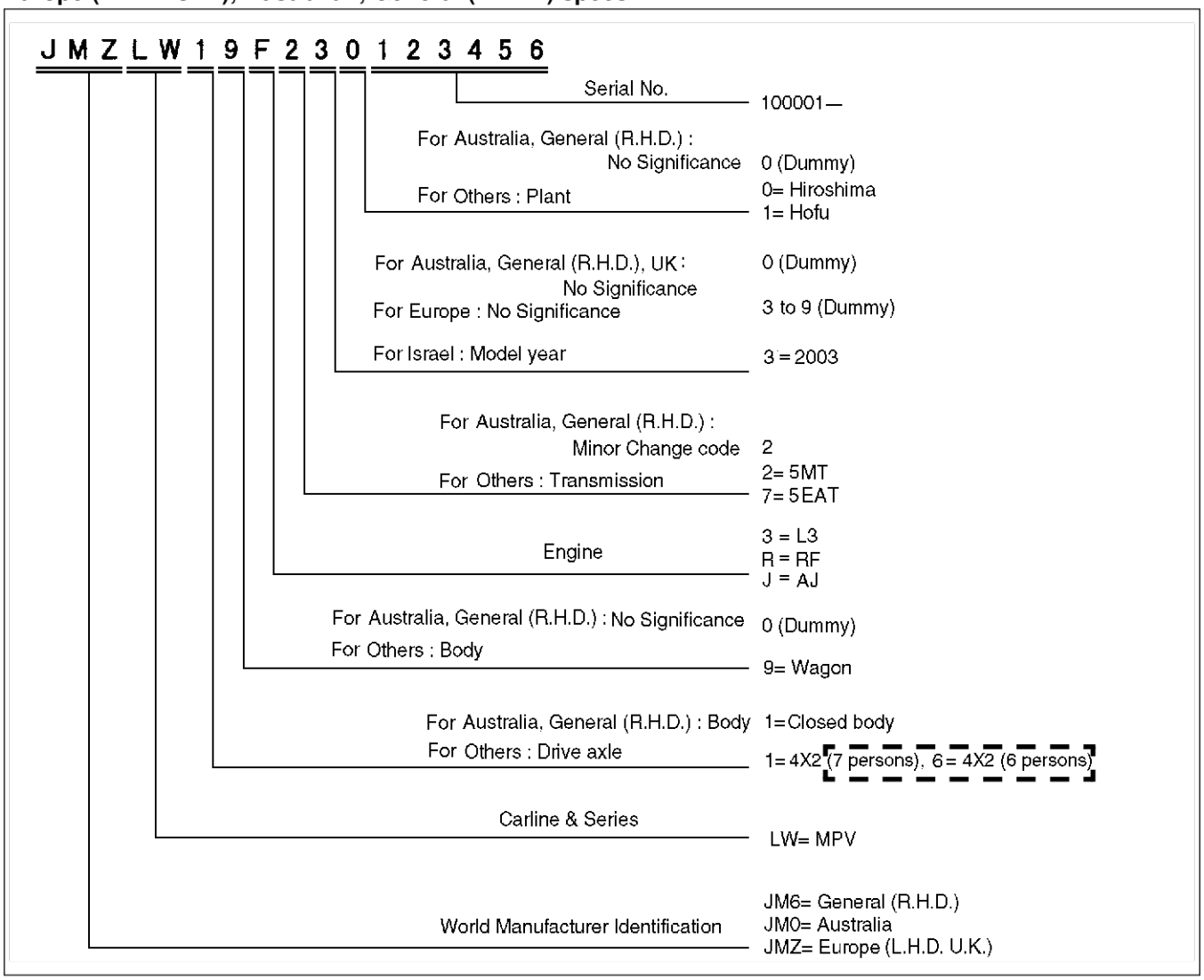

AME2011W001

General (L.H.D.) specs.

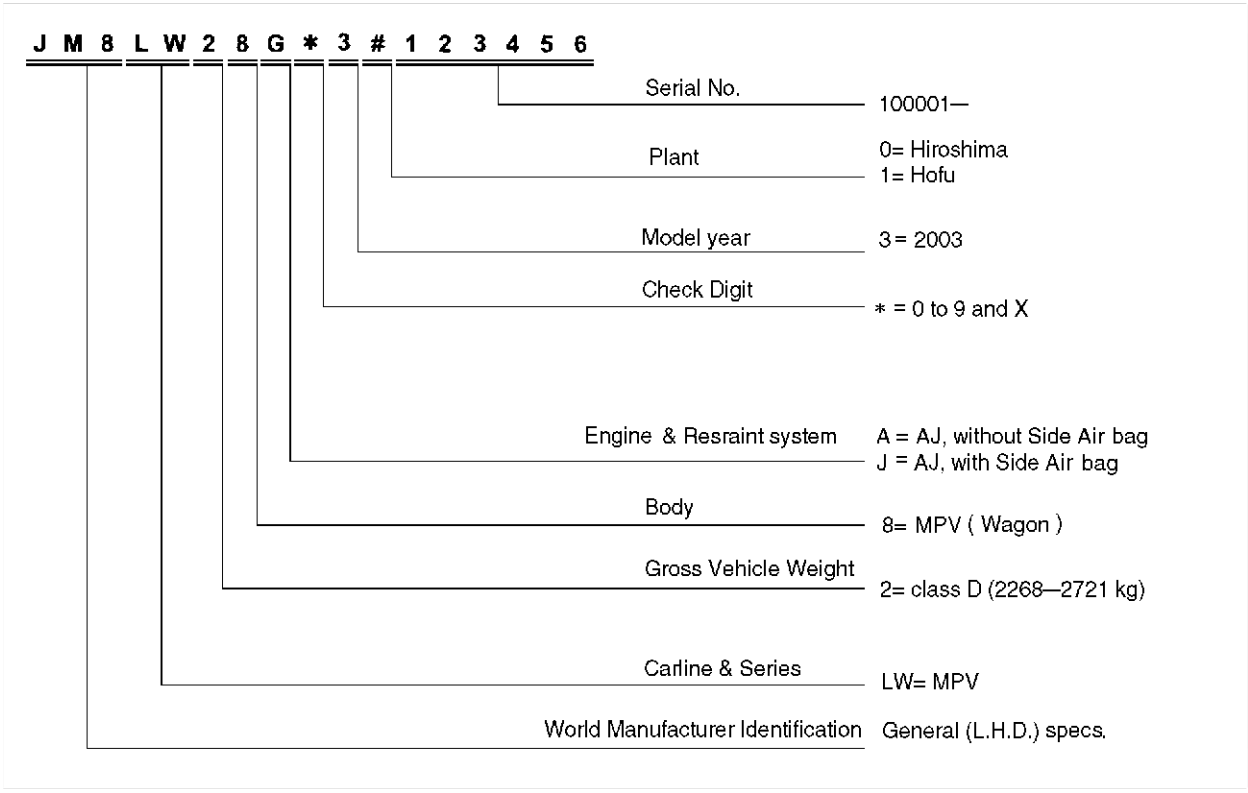

AME2011W002

End Of Sie

HOW TO USE THIS MANUAL

RANGE OF TOPICS

AME201000001W06

- This manual indicates only changes/additions, as it is supplemental to the related materials. Therefore it may not contain the necessary reference service procedures to perform the service indicated in this manual. Only the reference section, e.g. (See Section B.), is indicated. Refer to the appropriate section in the related material for details.

End Of Sie

FUNDAMENTAL PROCEDURES

SST

AME201400004W13

- Some global **SST** or equivalent are used as **SSTs** necessary for repairing. Note that these **SSTs** are marked with global **SST** numbers.
- Note that a global **SST** number is written together with a corresponding Mazda **SST** number as shown below.

Example (section ST)

- Both Mazda and global **SST** numbers are shown.

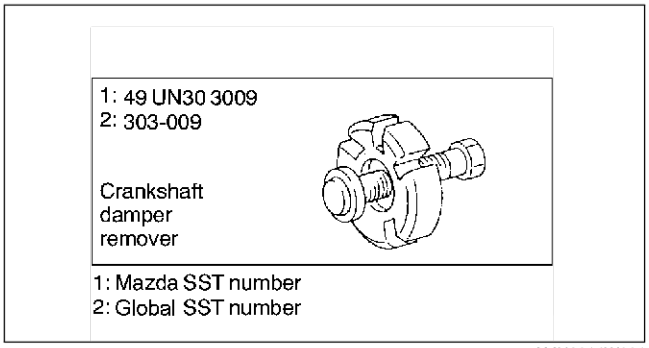

AMU2014W001

Example (except section ST)

- Only Mazda **SST** number is shown.

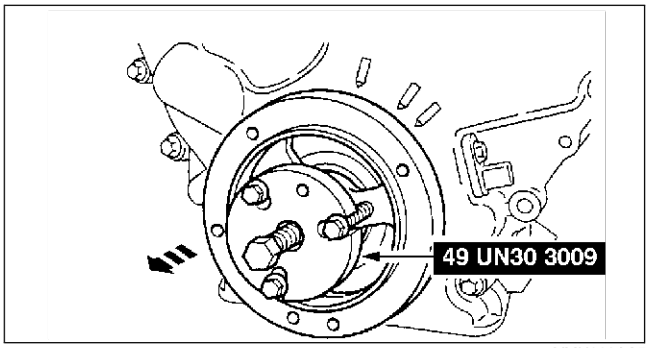

YMU000AA5

End Of Sie

ELECTRICAL SYSTEM

CONNECTORS

AME201700006W05

Direction of View for Connector
Part-side connector

Direction of view is from the terminal side.

* : Part names are shown only when there are multiple connector drawings.

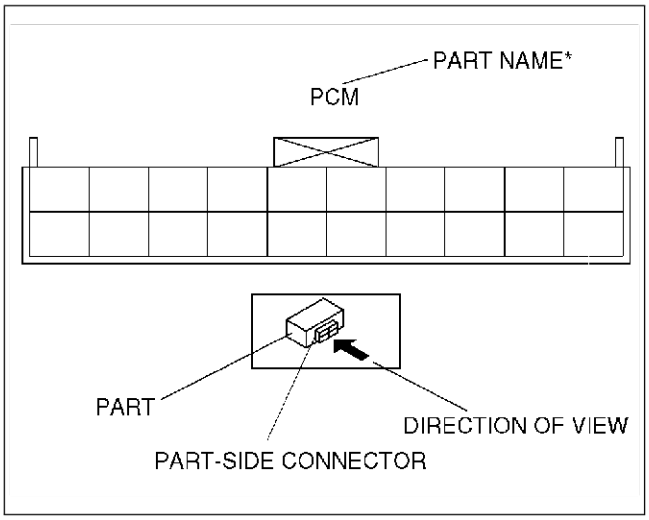

WGIWXX0100E

Vehicle-harness-side connector
Direction of view is from the harness side.

* : Part names are shown only when there are multiple connector drawings.

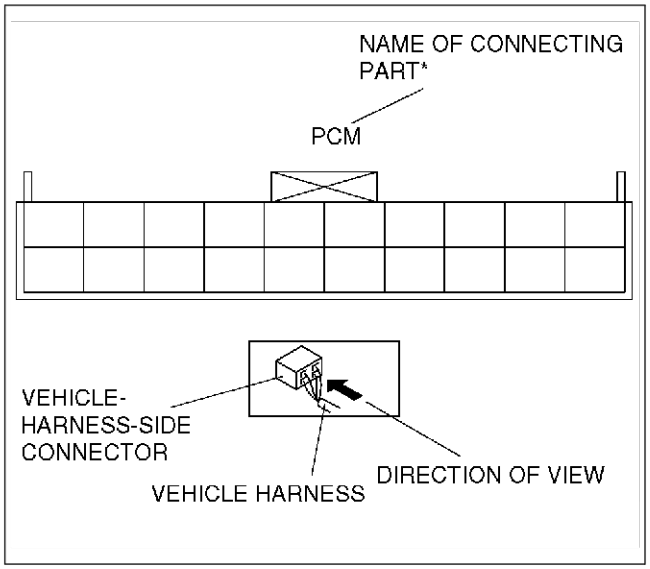

WGIWXX0101E

Other
Because vehicle-harness-side connectors, such as the DLC 2, have to be viewed from the terminal side, the direction of view is from the terminal side.

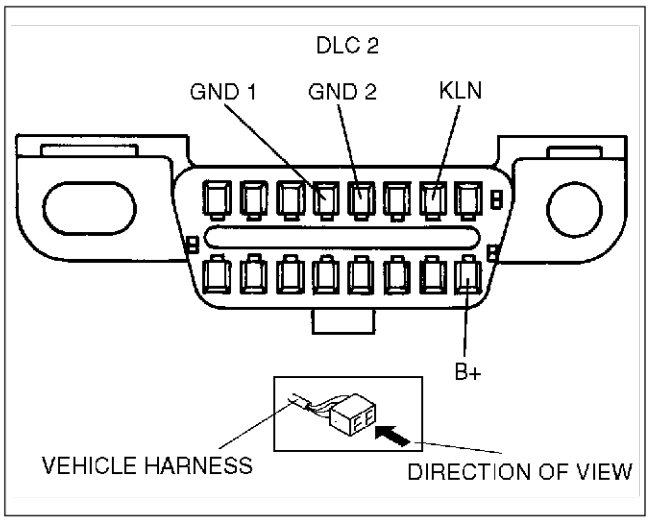

WGIWXX0102E

End Of Site

IDENTIFICATION NUMBER LOCATIONS

ENGINE IDENTIFICATION NUMBER

AME202600010W02

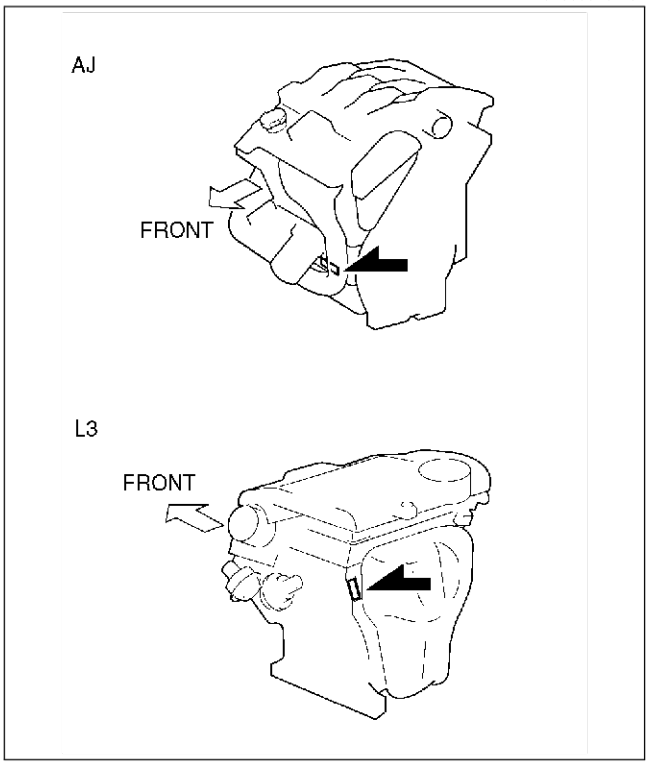

AME2026W002

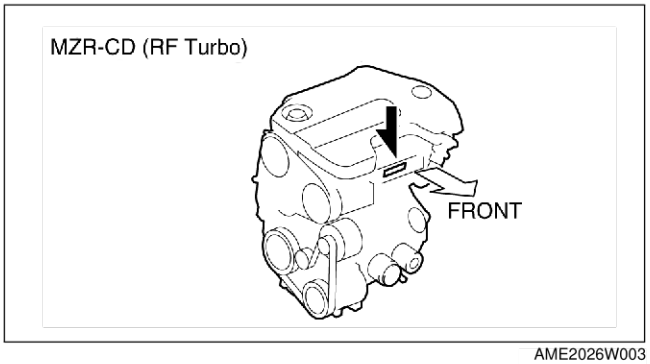

AME2026W003

End Of Sec

NEW STANDARDS

NEW STANDARDS TABLE

AME202800020W01

- The following is a comparison of the previous standard and the new standard.

New Standard		Previous Standard		Remark
Abbreviation	Name	Abbreviation	Name	
AP	Accelerator Pedal	—	Accelerator Pedal	
ACL	Air Cleaner	—	Air Cleaner	
A/C	Air Conditioning	—	Air Conditioning	
BARO	Barometric Pressure	—	Atmospheric Pressure	
B+	Battery Positive Voltage	V_B	Battery Voltage	
—	Brake Switch	—	Stoplight Switch	
—	Calibration Resistor	—	Corrected Resistance	#6
CMP sensor	Camshaft Position Sensor	—	Crank Angle Sensor	
CAC	Charge Air Cooler	—	Intercooler	
CLS	Closed Loop System	—	Feedback System	
CTP	Closed Throttle Position	—	Fully Closed	
—	Closed Throttle Position Switch	—	Idle Switch	
CPP	Clutch Pedal Position	—	Clutch Position	
CIS	Continuous Fuel Injection System	EGI	Electronic Gasoline Injection System	
CS sensor	Control Sleeve Sensor	CSP sensor	Control Sleeve Position Sensor	#6
CKP sensor	Crankshaft Position Sensor	—	Crank Angle Sensor 2	
DLC	Data Link Connector	—	Diagnosis Connector	
DTM	Diagnostic Test Mode	—	Test Mode	#1
DTC	Diagnostic Trouble Code	—	Service Code(s)	
DI	Distributor Ignition	—	Spark Ignition	
DLI	Distributorless Ignition	—	Direct Ignition	
EI	Electronic Ignition	—	Electronic Spark Ignition	#2
ECT	Engine Coolant Temperature	—	Water Thermo	
EM	Engine Modification	—	Engine Modification	
—	Engine Speed Input Signal	—	Engine RPM Signal	
EVAP	Evaporative Emission	—	Evaporative Emission	
EGR	Exhaust Gas Recirculation	—	Exhaust Gas Recirculation	
FC	Fan Control	—	Fan Control	
FF	Flexible Fuel	—	Flexible Fuel	
4GR	Fourth Gear	—	Overdrive	
—	Fuel Pump Relay	—	Circuit Opening Relay	#3
FSO solenoid	Fuel Shut Off Solenoid	FCV	Fuel Cut Valve	#6
GEN	Generator	—	Alternator	
GND	Ground	—	Ground/Earth	
HO2S	Heated Oxygen Sensor	—	Oxygen Sensor	With heater
IAC	Idle Air Control	—	Idle Speed Control	
—	IDM Relay	—	Spill Valve Relay	#6
—	Incorrect Gear Ratio	—	—	
—	Injection Pump	FIP	Fuel Injection Pump	#6
—	Input/Turbine Speed Sensor	—	Pulse Generator	
IAT	Intake Air Temperature	—	Intake Air Thermo	
KS	Knock Sensor	—	Knock Sensor	
MIL	Malfunction Indicator Lamp	—	Malfunction Indicator Light	
MAP	Manifold Absolute Pressure	—	Intake Air Pressure	
MAF sensor	Mass Air Flow Sensor	—	Airflow Sensor	
MFI	Multiport Fuel Injection	—	Multiport Fuel Injection	
OBD	On Board Diagnostic	—	Diagnosis/Self Diagnosis	

New Standard		Previous Standard		Remark
Abbreviation	Name	Abbreviation	Name	
OL	Open Loop	—	Open Loop	
—	Output Speed Sensor	—	Vehicle Speed Sensor 1	
OC	Oxidation Catalytic Converter	—	Catalytic Converter	
O2S	Oxygen Sensor	—	Oxygen Sensor	
PNP	Park/Neutral Position	—	Park/Neutral Range	
—	PCM Control Relay	—	Main Relay	#6
PSP	Power Steering Pressure	—	Power Steering Pressure	
PCM	Powertrain Control Module	ECU	Engine Control Unit	#4
—	Pressure Control Solenoid	—	Line Pressure Solenoid Valve	
PAIR	Pulsed Secondary Air Injection	—	Secondary Air Injection System	Pulsed injection
—	Pump Speed Sensor	—	NE Sensor	#6
AIR	Secondary Air Injection	—	Secondary Air Injection System	Injection with air pump
SAPV	Secondary Air Pulse Valve	—	Reed Valve	
SFI	Sequential Multiport Fuel Injection	—	Sequential Fuel Injection	
—	Shift Solenoid A	—	1–2 Shift Solenoid Valve	
		—	Shift A Solenoid Valve	
—	Shift Solenoid B	—	2–3 Shift Solenoid Valve	
		—	Shift B Solenoid Valve	
—	Shift Solenoid C	—	3–4 Shift Solenoid Valve	
3GR	Third Gear	—	3rd Gear	
TWC	Three Way Catalytic Converter	—	Catalytic Converter	
TB	Throttle Body	—	Throttle Body	
TP sensor	Throttle Position Sensor	—	Throttle Sensor	
TCV	Timer Control Valve	TCV	Timing Control Valve	#6
TCC	Torque Converter Clutch	—	Lockup Position	
TCM	Transmission (Transaxle) Control Module	—	EC-AT Control Unit	
—	Transmission (Transaxle) Fluid Temperature Sensor	—	ATF Thermosensor	
TR	Transmission (Transaxle) Range	—	Inhibitor Position	
TC	Turbocharger	—	Turbocharger	
VSS	Vehicle Speed Sensor	—	Vehicle Speed Sensor	
VR	Voltage Regulator	—	IC Regulator	
VAF sensor	Volume Air Flow Sensor	—	Airflow Meter	
WU-TWC	Warm Up Three Way Catalytic Converter	—	Catalytic Converter	#5
WOT	Wide Open Throttle	—	Fully Open	

#1 : Diagnostic trouble codes depend on the diagnostic test mode.
#2 : Controlled by the PCM
#3 : In some models, there is a fuel pump relay that controls pump speed. That relay is now called the fuel pump relay (speed).
#4 : Device that controls engine and powertrain
#5 : Directly connected to exhaust manifold
#6 : Part name of diesel engine

End Of Sta

ABBREVIATIONS

ABBREVIATIONS TABLE

AME203000011W01

ABS	Antilock brake system
ABDC	After bottom dead center
ACC	Accessories
ATDC	After top dead center
ATF	Automatic transaxle fluid
ATX	Automatic transaxle
BBDC	Before bottom dead center
BDC	Bottom dead center
BTDC	Before top dead center
CAN	Controller area network
CM	Control module
DEI	Double electric ignition
DOHC	Double overhead camshaft
E/L	Electric load
GPS	Global positioning system
HI	High
HU	Hydraulic unit
IDM	Injector driver module
IG	Ignition
IMCC	Intake manifold communication control
KOEO	Key on, engine off
KOER	Key on, engine running
LCD	Liquid crystal display
LF	Left front
LH	Left hand
L.H.D.	Left hand drive
LO	Low
LR	Left rear
M	Motor
MAX	Maximum
MIN	Minimum
MTX	Manual transaxle
O/D	Overdrive
OCV	Oil control valve
OFF	Switch off
ON	Switch on
P/S	Power steering
PID	Parameter identification
PCV	Positive crankcase ventilation
PRC	Pressure regulator control
RDS	Radio data system
RF	Right front
RH	Right hand
R.H.D.	Right hand drive
RR	Right rear
SAS	Sophisticated air bag sensor
SEI	Single electric ignition
SST	Special service tool
SW	Switch
TDC	Top dead center
TFT	Transaxle fluid temperature
TNS	Tail number side lights
VBC	Variable boost control
VENT	Ventilation
VIS	Variable inertia charging system
VSC	Variable swirl control
VTCS	Variable tumble control system
WDS	Worldwide diagnostic system

End Of Sta

SCHEDULED MAINTENANCE

SCHEDULED MAINTENANCE TABLE

AME203400013W01

For Europe (L.H.D. U.K.)
Chart symbols:

I : Inspect: Inspect and clean, repair, adjust, or replace if necessary. (Oil-permeated air cleaner elements cannot be cleaned using the air-blow method.)
R : Replace
T : Tighten
L : Lubricate
C : Clean

Remarks:

- To ensure efficient operation of the engine and all systems related to emission control, the ignition and fuel systems must be serviced regularly. It is strongly recommended that all servicing related to these systems be done by an authorized Mazda Dealer.
- After the described period, continue to follow the described maintenance at the recommended intervals.
- Refer below for a description of items marked* in the maintenance chart.

*1: If the vehicle is operated under any of the following conditions, change the engine oil and oil filter every 10,000 km {6,250 miles} or shorter.
  a. Driving in dusty conditions.
  b. Extended periods of idling or low speed operation.
  c. Driving for long period in cold temperatures or driving regularly at short distance only.

*2: Also inspect and adjust the power steering and air conditioner drive belts, if installed.

*3: If the brakes are used extensively (for example, continuous hard driving or mountain driving) or if the vehicle is operated in extremely humid climates, change the brake fluid annually.

*4: If the vehicle is operated in very dusty or sandy areas, clean and if necessary, replace the air cleaner element more often than the recommended intervals.

*5: Replacement of the timing belt is required at every 100,000 km {62,500 miles}. Failure to replace the timing belt may result in damage to the engine.

*6: Replacement of the timing belt is required at every 120,000 km {75,000 miles}. Failure to replace the timing belt may result in damage to the engine.

Maintenance Item		Maintenance Interval (Number of months or kilometers (miles), whichever comes first)								
	Months	**12**	**24**	**36**	**48**	**60**	**72**	**84**	**96**	**108**
	×1000 km	**20**	**40**	**60**	**80**	**100**	**120**	**140**	**160**	**180**
	×1000 miles	**12.5**	**25**	**37.5**	**50**	**62.5**	**75**	**87.5**	**100**	**112.5**
GASOLINE ENGINE										
Spark plugs		Replace every 100,000 km (62,500 miles)								
Air cleaner element*4				R			R			R
E.G.R. system					I				I	
DIESEL ENGINE										
Engine valve clearance		I					I			
Engine timing belt	Finland, Sweden, Norway*5	Replace every 100,000 km (62,500 miles)								
	Others*6	Replace every 120,000 km (75,000 miles)								
Fuel filter				R			R			R
Fuel injection system		I		I			I			I
Air cleaner element*4		C	C	R	C	C	R	C	C	R
E.G.R.system				I			I			I
GASOLINE and DIESEL ENGINE										
Engine oil*1		R	R	R	R	R	R	R	R	R
Engine oil filter*1		R	R	R	R	R	R	R	R	R
Drive belts*2				I			I			I
Cooling system (Including coolant level adjustment)			I		I		I		I	
Engine coolant		Replace at first 4 years or 100,000 km (62,500 miles); after that, every 2 years								

Maintenance Item	Maintenance Interval (Number of months or kilometers (miles), whichever comes first)									
	Months	**12**	**24**	**36**	**48**	**60**	**72**	**84**	**96**	**108**
	×1000 km	**20**	**40**	**60**	**80**	**100**	**120**	**140**	**160**	**180**
	×1000 miles	**12.5**	**25**	**37.5**	**50**	**62.5**	**75**	**87.5**	**100**	**112.5**
Fuel lines and hoses			I		I		I		I	
Battery electrolyte level and specific gravity		I	I	I	I	I	I	I	I	I
Brake and clutch pedals		I	I	I	I	I	I	I	I	I
Brake fluid*3			R		R		R		R	
Brake lines, hoses and connections		I	I	I	I	I	I	I	I	I
Parking brake		I	I	I	I	I	I	I	I	I
Power brake unit and hoses		I	I	I	I	I	I	I	I	I
Disc brakes		I	I	I	I	I	I	I	I	I
Drum brakes		I	I	I	I	I	I	I	I	I
Power steering fluid, lines, hoses and connections		I	I	I	I	I	I	I	I	I
Steering operations and linkages			I		I		I		I	
Manual transaxle oil						R				
Front and rear suspension and ball joints			I		I		I		I	
Driveshaft dust boots			I		I		I		I	
Exhaust system and heat shields			I		I		I		I	
Cabin air filter (if installed)		R	R	R	R	R	R	R	R	R
Bolts and nuts on seats			I		I		I		I	
Body condition (for rust, corrosion and perforation)		Inspect annually								

For Israel
Chart symbols:

I : Inspect: Inspect and clean, repair, adjust, or replace if necessary. (Oil-permeated air cleaner elements cannot be cleaned using the air-blow method.)
R : Replace
T : Tighten
L : Lubricate
C : Clean

Remarks:

- To ensure efficient operation of the engine and all systems related to emission control, the ignition and fuel systems must be serviced regularly. It is strongly recommended that all servicing related to these systems be done by an authorized Mazda Dealer.
- After the described period, continue to follow the described maintenance at the recommended intervals.
- Refer below for a description of items marked* in the maintenance chart.

*1: If the vehicle is operated under any of the following conditions, change the engine oil and oil filter every 10,000 km {6,000miles} or shorter.
  a. Driving in dusty conditions.
  b. Extended periods of idling or low speed operation.
  c. Driving for long period in cold temperatures or driving regularly at short distance only.

*2: Also inspect and adjust the power steering and air conditioner drive belts, if installed.

*3: If the brakes are used extensively (for example, continuous hard driving or mountain driving) or if the vehicle is operated in extremely humid climates, change the brake fluid annually.

*4: If the vehicle is operated in very dusty or sandy areas, clean and if necessary, replace the air cleaner element more often than the recommended intervals.

*5: This is a full function check of electrical systems such as lights, wiper and washer systems (including wiper blades), and power windows.

Maintenance Item	Maintenance Interval (Number of months or kilometers (miles), whichever comes first)											
Months	**12**	**24**	**36**	**48**	**60**	**72**	**84**	**96**	**108**	**120**	**132**	**144**
×1000 km	**15**	**30**	**45**	**60**	**75**	**90**	**105**	**120**	**135**	**150**	**165**	**180**
×1000 miles	**9**	**18**	**27**	**36**	**45**	**54**	**63**	**72**	**81**	**90**	**99**	**108**
Drive belts*2	I	I	I	I	I	I	I	I	I	I	I	I
Engine oil*1	R	R	R	R	R	R	R	R	R	R	R	R
Engine oil filter*1	R	R	R	R	R	R	R	R	R	R	R	R
Cooling system (Including coolant level adjustment)		I		I		I		I		I		I
Engine coolant	Replace at first 4 years or 90,000km (54,000 miles); after that, every 2 years											
Air cleaner element*4	C	C	C	R	C	C	C	R	C	C	C	R
Fuel filter					R					R		
Fuel lines and hoses		I		I		I		I		I		I
Spark plugs	Replace every 90,000 km (54,000 miles)											
E.G.R. system (if installed)				I				I				I
Evaporative system				I				I				I
Battery electrolyte level and specific gravity	I	I	I	I	I	I	I	I	I	I	I	I
Brake pedal	I	I	I	I	I	I	I	I	I	I	I	I
Brake lines, hoses and connections	I	I	I	I	I	I	I	I	I	I	I	I
Brake fluid*3	I	R	I	R	I	R	I	R	I	R	I	R
Parking brake	I	I	I	I	I	I	I	I	I	I	I	I
Power brake unit and hoses	I	I	I	I	I	I	I	I	I	I	I	I
Disc brakes	I	I	I	I	I	I	I	I	I	I	I	I
Drum brakes	I	I	I	I	I	I	I	I	I	I	I	I
Power steering fluid, lines, hoses and connections	I	I	I	I	I	I	I	I	I	I	I	I
Steering operation and linkages		I		I		I		I		I		I
Automatic transaxle fluid level		I		I		I		I		I		I
Front and rear suspension and ball joints			I		I		I		I		I	

Maintenance Item	Maintenance Interval (Number of months or kilometers (miles), whichever comes first)											
	Months	**12**	**24**	**36**	**48**	**60**	**72**	**84**	**96**	**108**	**120**	**132**	**144**
	×1000 km	**15**	**30**	**45**	**60**	**75**	**90**	**105**	**120**	**135**	**150**	**165**	**180**
	×1000 miles	**9**	**18**	**27**	**36**	**45**	**54**	**63**	**72**	**81**	**90**	**99**	**108**
Driveshaft dust boots				I		I		I		I		I	
Exhaust system and heat shields			I		I		I		I		I		I
Cabin air filter (if installed)		R	R	R	R	R	R	R	R	R	R	R	R
Body condition (for rust, corrosion and perforation)		Inspect annually											
Bolts and nuts on seats			I		I		I		I		I		I
All electrical system*5		I	I	I	I	I	I	I	I	I	I	I	I

For General (L.H.D. R.H.D)
Chart symbols:

I : Inspect: Inspect and clean, repair, adjust, or replace if necessary. (Oil-permeated air cleaner elements cannot be cleaned using the air-blow method.)
R : Replace
T : Tighten
L : Lubricate
C : Clean

Remarks:

- To ensure efficient operation of the engine and all systems related to emission control, the ignition and fuel systems must be serviced regularly. It is strongly recommended that all servicing related to these systems be done by an authorized Mazda Dealer.
- After the described period, continue to follow the described maintenance at the recommended intervals.
- Refer below for a description of items marked* in the maintenance chart.

*1: If the vehicle is operated under any of the following conditions, change the engine oil and oil filter more often than recommended intervals.
  a. Driving in dusty conditions.
  b. Extended periods of idling or low speed operation.
  c. Driving for long period in cold temperatures or driving regularly at short distance only.

*2: Also inspect and adjust the power steering and air conditioner drive belts, if installed.

*3: If the brakes are used extensively (for example, continuous hard driving or mountain driving) or if the vehicle is operated in extremely humid climates, change the brake fluid annually.

*4: If the vehicle is operated in very dusty or sandy areas, clean and if necessary, replace the air cleaner element more often than the recommended intervals.

*5: This is a full function check of electrical systems such as lights, wiper and washer systems (including wiper blades), and power windows.

Maintenance Item	Maintenance Interval (Number of months or kilometers (miles), whichever comes first)															
Months	6	12	18	24	30	36	42	48	54	60	66	72	78	84	90	96
×1000 km	10	20	30	40	50	60	70	80	90	100	110	120	130	140	150	160
×1000 miles	6.25	12.5	18.75	25	31.25	37.5	43.75	50	56.25	62.5	68.75	75	81.25	87.5	93.75	100
Spark plugs	Replace every 100,000 km (62,500 miles)															
Fuel filter				R				R				R				R
Evaporative system (if installed)		I		I		I		I		I		I		I		I
Air cleaner element*4		C		C		R		C		C		R		C		C
Engine oil*1	R	R	R	R	R	R	R	R	R	R	R	R	R	R	R	R
Engine Oil filter*1	R	R	R	R	R	R	R	R	R	R	R	R	R	R	R	R
Drive belts*2	I	I	I	I	I	I	I	I	I	I	I	I	I	I	I	I
Cooling system		I		I		I		I		I		I		I		I
Engine coolant	Replace every 2 years															
Fuel lines and hoses		I		I		I		I		I		I		I		I
E.G.R. system (if installed)		I		I		I		I		I		I		I		I
Battery electrolyte level and specific gravity		I		I		I		I		I		I		I		I
Head light alignment			I			I			I			I			I	
Brake and clutch pedals	I	I	I	I	I	I	I	I	I	I	I	I	I	I	I	I
Brake lines, hoses and connections		I		I		I		I		I		I		I		I
Brake fluid*3	I	I	I	R	I	I	I	R	I	I	I	R	I	I	I	R
Parking brake	I	I	I	I	I	I	I	I	I	I	I	I	I	I	I	I
Power brake unit and hoses		I		I		I		I		I		I		I		I
Disc brakes	I	I	I	I	I	I	I	I	I	I	I	I	I	I	I	I
Drum brakes		I		I		I		I		I		I		I		I
Power steering fluid, lines, hoses and connections	I	I	I	I	I	I	I	I	I	I	I	I	I	I	I	I
Steering operation and linkages		I		I		I		I		I		I		I		I
Manual transaxle oil										R						
Automatic transmission fluid level		I		I		I		I				I		I		I

Maintenance Item	Maintenance Interval (Number of months or kilometers (miles), whichever comes first)															
	Months	6	12	18	24	30	36	42	48	54	60	66	72	78	84	90	96
	×1000 km	10	20	30	40	50	60	70	80	90	100	110	120	130	140	150	160
	×1000 miles	6.25	12.5	18.75	25	31.25	37.5	43.75	50	56.25	62.5	68.75	75	81.25	87.5	93.75	100
Automatic transmission fluid						R					R					R	
Front and rear suspension and ball joints					I				I				I				I
Driveshaft dust boots					I				I				I				I
Bolts and nuts on chassis and body		T		T		T		T		T		T		T		T	
Exhaust system heat shields					I				I				I				I
Cabin air filter (if installed)		R		R		R		R		R		R		R		R	
Body condition (for rust, corrosion & perforation)	Inspect annually																
Tires (including spare tire) (with inflation pressure adjustment)		I		I		I		I		I		I		I		I	
All electrical system*5		I		I		I		I		I		I		I		I	

For Australia

I. Inspect and repair, clean, adjust, or replace if necessary. (Oil-permeated air cleaner elements cannot be cleaned using the air-blow method.)
R. Replace
T. Tighten
L. Lubricate
C. Clean

Remarks:

- To ensure efficient operation of the engine and all systems related to emission control, the ignition and fuel systems must be serviced regularly. It is strongly recommended that all servicing related to these systems be done by an authorized Mazda Dealer.
- After the prescribed period, continue to follow the described maintenance at the recommended intervals.
- Refer below for a description of items marked* in the maintenance chart.

*1: Also inspect and adjust the power steering and air conditioner drive belts, if installed.

*2: If the vehicle is operated under any of the following conditions, change the engine oil and oil filter more often than recommended intervals.
  a. Driving in dusty conditions.
  b. Extended periods of idling or low speed operation.
  c. Driving for long period in cold temperatures or driving regularly at short distance only.

*3: If the vehicle is operated in very dusty or sandy areas, clean and if necessary, replace the air cleaner element more often than the recommended intervals.

*4: This is a full function check of electrical systems such as lights, wiper and washer systems (including wiper blades), and power windows.

*5: If the brakes are used extensively (for example, continuous hard driving or mountain driving) or if the vehicle is operated in extremely humid climates, change the brake fluid annually.

Maintenance Item	Maintenance Interval (Number of months or km (miles), whichever comes first)															
Months	6	12	18	24	30	36	42	48	54	60	66	72	78	84	90	96
×1000 km	10	20	30	40	50	60	70	80	90	100	110	120	130	140	150	160
×1000 miles	6.25	12.5	18.75	25	31.25	37.5	43.75	50	56.25	62.5	68.75	75	81.25	87.5	93.75	100
ENGINE																
Drive belts *1	I	I	I	I	I	I	I	I	I	I	I	I	I	I	I	I
Engine oil *2	R	R	R	R	R	R	R	R	R	R	R	R	R	R	R	R
Engine oil filter *2	R	R	R	R	R	R	R	R	R	R	R	R	R	R	R	R
COOLING SYSTEM																
Cooling system		I		I		I		I		I		I		I		I
Engine coolant	Replace every 2 years															
FUEL SYSTEM																
Air cleaner element *3			C			R			C			R			C	
Fuel filter						R						R				
Fuel lines & hoses		I		I		I		I		I		I		I		I
IGNITION SYSTEM																
Spark plugs	Replace every 100,000 km (62,500 miles)															
EMISSION CONTROL SYSTEM																
Evaporative system (if installed)		I		I		I		I		I		I		I		I
E.G.R. system (if installed)		I		I		I		I		I		I		I		I
ELECTRICAL SYSTEM																
Battery electrolyte level & specific gravity		I		I		I		I		I		I		I		I
All electrical system *4		I		I		I		I		I		I		I		I
Headlight alignment			I			I			I			I			I	
CHASSIS & BODY																
Brake pedal	I	I	I	I	I	I	I	I	I	I	I	I	I	I	I	I
Brake lines, hoses & connections		I		I		I		I		I		I		I		I
Brake fluid *5	I	I	I	R	I	I	I	R	I	I	I	R	I	I	I	R

Maintenance Item	Maintenance Interval (Number of months or km (miles), whichever comes first)															
	Months	6	12	18	24	30	36	42	48	54	60	66	72	78	84	90	96
	×1000 km	10	20	30	40	50	60	70	80	90	100	110	120	130	140	150	160
	×1000 miles	6.25	12.5	18.75	25	31.25	37.5	43.75	50	56.25	62.5	68.75	75	81.25	87.5	93.75	100
Parking brake		I	I	I	I	I	I	I	I	I	I	I	I	I	I	I	I
Power brake unit & hoses			I		I		I		I		I		I		I		I
Disc brakes		I	I	I	I	I	I	I	I	I	I	I	I	I	I	I	I
Drum brakes			I		I		I		I		I		I		I		I
Power steering fluid & lines, hoses and connections		I	I	I	I	I	I	I	I	I	I	I	I	I	I	I	I
Steering operation & linkages			I		I		I		I		I		I		I		I
Automatic transmission fluid level			I		I		I		I		I		I		I		I
Front & rear suspension & ball joints					I				I				I				I
Driveshaft dust boots					I				I				I				I
Bolts & nuts on chassis & body			T		T		T		T		T		T		T		T
Exhaust system heat shields					I				I				I				I
Tyres (including spare tire) (with inflation pressure adjustment)			I		I		I		I		I		I		I		I

Scheduled Maintenance Service (Specific Work Required)

- The specific work required for each maintenance item is listed in the following table. (Please refer to the section applicable to the model serviced.)

For Europe (L.H.D. U.K.)

Maintenance Item	Specific Work Required
ENGINE	
Engine valve clearance	Measure clearance
Drive belts	Inspect for wear, cracks and fraying, and check tension. Replace drive belt.
Engine timing belt	Replace engine timing belt.
Engine oil	Replace engine oil and inspect for leakage.
Oil filter	Replace oil filter and inspect for leakage.
Oil by-pass filter	Replace oil by-pass filter and inspect for leakage.
COOLING SYSTEM	
Cooling system (including coolant level adjustment)	Check coolant level and quality, and inspect for leakage.
Engine coolant	Replace coolant.
FUEL SYSTEM	
Idle speed	Check engine idle rpm.
Idle mixture (for CIS & carburetor leaded fuel)	Check the CO and HC concentrations (see W/M).
Choke system (for carburetor)	Check system operation.
Air cleaner element	Inspect for dirt, oil and damage. Clean air cleaner element (by blowing air). Replace air cleaner element.
Fuel filter	Replace fuel filter.
Fuel lines & hoses	Inspect for cracks, leakage and loose connection.
Fuel injection system (for MZR-CD (RF Turbo))	Update to injection amount correction with WDS. (see W/M)
IGNITION SYSTEM (FOR GASOLINE)	
Initial ignition timing	Check initial ignition timing.
Spark plugs	Inspect for wear, damage, carbon, high-tension lead condition and measure plug gap. Replace spark plugs.
EMISSION CONTROL SYSTEM	
Evaporative system (for gasoline)	Check system operation (see W/M), vapor lines, vacuum fitting hoses and connection.
Throttle positioner system (for gasoline)	Check the diaphragm and system operation, vacuum fitting hoses and connection.
Dash pot (for carburetor) (for gasoline)	Check system operation.
E.G.R. system	Check system operation (see W/M), vacuum fitting hoses and connection.
E.G.R. system (for MZR-CD (RF Turbo))	Check system operation (see W/M), vacuum fitting hoses and connection. Update to MAF correction for E.G.R control with WDS. (see W/M)
ELECTRICAL SYSTEM	
Battery electrolyte level & specific gravity	Check level and specific gravity.
Battery condition	Check the battery for corroded or loose connections and cracks in the case (for maintenance free type).
All electrical system	Check function of lighting system, windshield wiper (including wiper blade condition) and washer and power windows.
Headlight alignment	Check headlight alignment
CHASSIS & BODY	
Brake & clutch pedals	Check pedal height and free play.
Brake fluid	Check fluid level and inspect for leakage. Replace brake fluid.
Clutch fluid	Check fluid level and inspect for leakage.
Brake lines, hoses & connections	Inspect for cracks, damage, chafing, corrosion, scars, swelling and fluid leakage.
Parking brake	Check lever stroke.
Power brake unit & hoses	Check vacuum lines, connections and check valve for improper attachment, air tightness, cracks chafing and deterioration.

Maintenance Item	Specific Work Required
Disc brakes	Test for judder and noise. Inspect caliper for correct operation and fluid leakage, brake pads for wear. Check disc plate condition and thickness.
Drum brakes	Test for judder and noise. Inspect brake drum for wear and scratches; brake lining for wear, peeling and cracks; and wheel cylinder for fluid leakage.
Manual steering gear oil	Check gear oil level.
Power steering fluid & lines	Check fluid level and lines for improper attachment, leakage, cracks, damage, loose connections, chafing and deterioration.
Power steering fluid	Check fluid level.
Power steering system & hoses	Check lines for improper attachment, leakage, cracks, damage, loose connections, chafing and deterioration.
Steering & front suspension	Check free play of steering system, inspect shock absorbers for correct damping force, oil leakage, damage and looseness, and inspect coil springs, arms, links and stabilizer for damage and looseness.
Steering operation & gear housing	Check that the steering wheel has the specified play. Be sure to check for changes, such as excessive play, hard steering or strange noises. Check gear housing and boots for looseness, damage and grease/gear oil leakage.
Steering linkages tie rod ends & arms	Check ball joint, dust cover and other components for looseness, wear, damage and grease leakage.
Front & rear suspension ball joints	Inspect for grease leakage, cracks, damage and looseness.
Manual transmission/transaxle oil	Check oil level and inspect for leakage. Replace manual transmission/transaxle oil.
Automatic transaxle oil level	Check oil level.
Automatic transmission/transaxle fluid level	Check fluid level.
Automatic transmission/transaxle fluid	Replace automatic transmission/transaxle fluid.
Front & rear differential oil	Check oil level and inspect for leakage. Replace front & rear differential oil.
Rear differential oil	Check oil level and inspect for leakage. Replace rear differential oil.
Transfer oil (for 4×4)	Check oil level and inspect for leakage. Replace transfer oil.
Upper arm shafts (for B-Series)	Lubricate the upper arm shafts for looseness or damage.
Front & rear wheel bearing grease	Remove wheel bearing and replace the grease.
Propeller shaft joints (with grease nipple)	Lubricate propeller shaft joints.
Driveshaft dust boots	Inspect for grease leakage, cracks, damage and looseness.
Wheel nuts	Tighten wheel nuts.
Bolts & nuts on chassis & body	Tighten bolts and nuts fastening suspension components, members and seat frames.
Body condition (for rust, corrosion & perforation)	Inspect body surface for paint damage, rust, corrosion and perforation.
Exhaust system heat shields	Inspect for damage, corrosion, looseness of connections and gas leakage.
Tires (including spare tire) (with inflation pressure adjustment)	Check air pressure and inspect tires for tread wear, damage and cracks; and wheels for damage and corrosion.
Hinges & catches	Lubricate hinges and catches of doors, trunk lid and hood.
Seat belts	Inspect seat belt webbing for scratches, tears and wear, and check anchor bolt tightness.
Rear suspension uni-ball & sliding rubber bushing (for RX-7)	Inspect for cracks, damage and looseness.
Underside of vehicle	Inspect underside of vehicle (floor pans, frames, fuel lines, around exhaust system, etc.) for damage and corrosion.
Road test	Check brake operation/clutch operation/steering control/operation of meters and gauges/squeaks, rattles or unusual noises/engine general performance/emergency locking retractors.
AIR CONDITIONER SYSTEM (IF EQUIPPED)	
Refrigerant amount	Check refrigerant amount.
Compressor operation	Check compressor operation, and inspect for noise, oil leakage, cracks and refrigerant leakage.
Cabin air filter	Replace cabin air filter.
4WS SYSTEM	

Maintenance Item	Specific Work Required
Front & rear power steering system & hoses	Check lines for improper attachment, leaks, cracks, damage, loose connections, chafing and deterioration.
4WS operation & linkages	Inspect for leakage, cracks, damage and looseness.
Rear wheel steering angle	Inspect for rear wheel steering angle.
Rear suspension outer ball joints	Inspect for grease leakage, cracks, damage and looseness.

End Of Sie

ENGINE [GY, AJ]

FEATURES

OUTLINE B2-2
OUTLINE OF CONSTRUCTION B2-2
FEATURES B2-2
SPECIFICATIONS B2-2
STRUCTURAL VIEW B2-3
ENGINE B2-4
PISTON DESCRIPTION B2-4
CYLINDER BLOCK DESCRIPTION B2-4
CAMSHAFT DESCRIPTION B2-5
PLUG HOLE PLATE STRUCTURAL VIEW B2-5

SERVICE

OUTLINE B2-6
SUPPLEMENTAL SERVICE INFORMATION ... B2-6
TIMING CHAIN B2-7
TIMING CHAIN REMOVAL/INSTALLATION B2-7
CYLINDER HEAD GASKET B2-23
CYLINDER HEAD GASKET REPLACEMENT B2-23
HYDRAULIC LASH ADJUSTER (HLA) B2-26
HYDRAULIC LASH ADJUSTER (HLA) REMOVAL/INSTALLATION B2-26
ENGINE B2-29
ENGINE REMOVAL/INSTALLATION B2-29

OUTLINE

OUTLINE OF CONSTRUCTION

AME230202000W05

- The AJ engine model has been adopted. (Australian, General (L.H.D. R.H.D.) Specs and Israeli Specs.)
- The construction and operation of the new MPV (LW) AJ engine model is the same as that of the Previous MPV (LW) GY engine model, except for the following features. (See Mazda MPV Training Manual 3340-1*-99F.)

End Of Sie

FEATURES

AME230202000W06

Improved Marketability

- The AJ engine model has been adopted.

Reduced weight

- Cylinder head cover material has been changed from aluminium to plastic.

Improved Design

- A plug hole plate has been adopted.

Improved Driveability

- Piston diameter and cylinder bore have been changed.
- Valve timing has been changed.

End Of Sie

SPECIFICATIONS

AME230202000W07

Item			Specifications	
			New MPV (LW)	Previous MPV (LW)
			AJ	GY
Type			Gasoline, 4-cycle	
Cylinder arrangement and number			60° V configuration, 6-cylinder	
Combustion chamber			Pentroof	
Valve system			DOHC, Timing chain driven, 24 valves	
Displacement (ml {cc, cu in})			2,967 {2,967,181.0}	2,498 {2,498, 152.4}
Bore × stroke (mm {in})			89.0×79.5 {3.50×3.13}	81.7×79.5 {3.22×3.13}
Compression ratio			10.0 : 1	9.7 : 1
Valve timing	IN	Open BTDC	4°	17°
		Close ABDC	48°	47° (Primary), 53° (Secondary)
	EX	Open BBDC	56°	67°
		Close ATDC	12°	13°
Valve clearance (Engine cold)	IN	(mm {in})	0 {0} Maintenance-free	
	EX	(mm {in})	0 {0} Maintenance-free	

Bold frames :New specifications

End Of Sie

STRUCTURAL VIEW

AME230202000W09

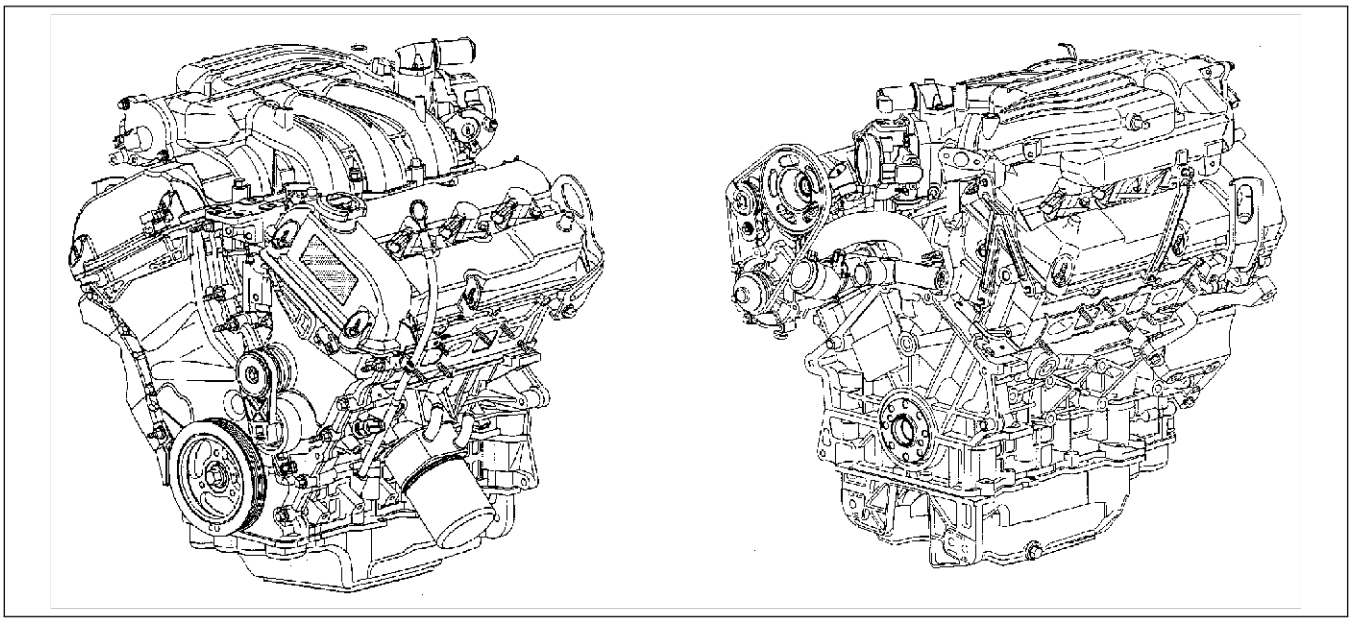

AME2202N002

End Of Sub

ENGINE

PISTON DESCRIPTION

AME000011010W01

- Piston diameter has been changed.

Piston diameter (A)

Size	New MPV (LW)	Previous MPV (LW)
	AJ	GY
Standard	88.990—89.030 mm {3.5035—3.5051 in}	81.630—81.670 mm {3.2138—3.2153 in}

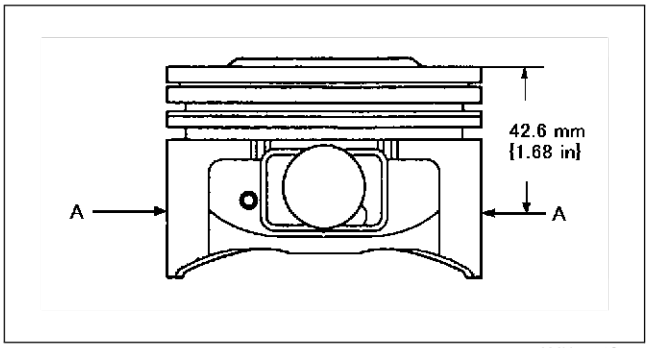

AMU2224S003

End Of Sec

CYLINDER BLOCK DESCRIPTION

AME000010300W01

- Cylinder bore has been changed.

Cylinder bore

Size	New MPV (LW)	Previous MPV (LW)
	AJ	GY
Standard	89.000—89.030 mm {3.5039—3.5051 in}	81.640—81.670 mm {3.2142—3.2153 in}

1	Cylinder block
2	Cylinder bore

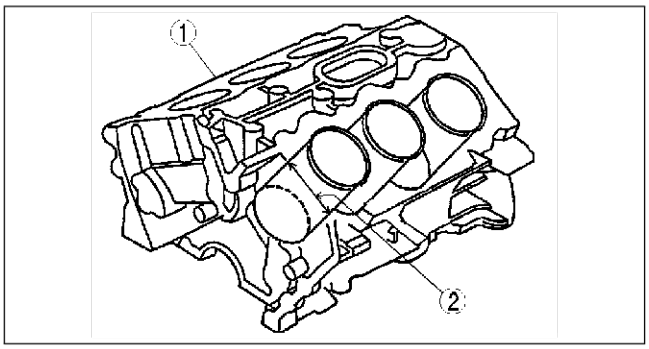

AMU2224S010

End Of Sec

CAMSHAFT DESCRIPTION

AME000012420W01

- AJ and GY engines differ in the valve timing.

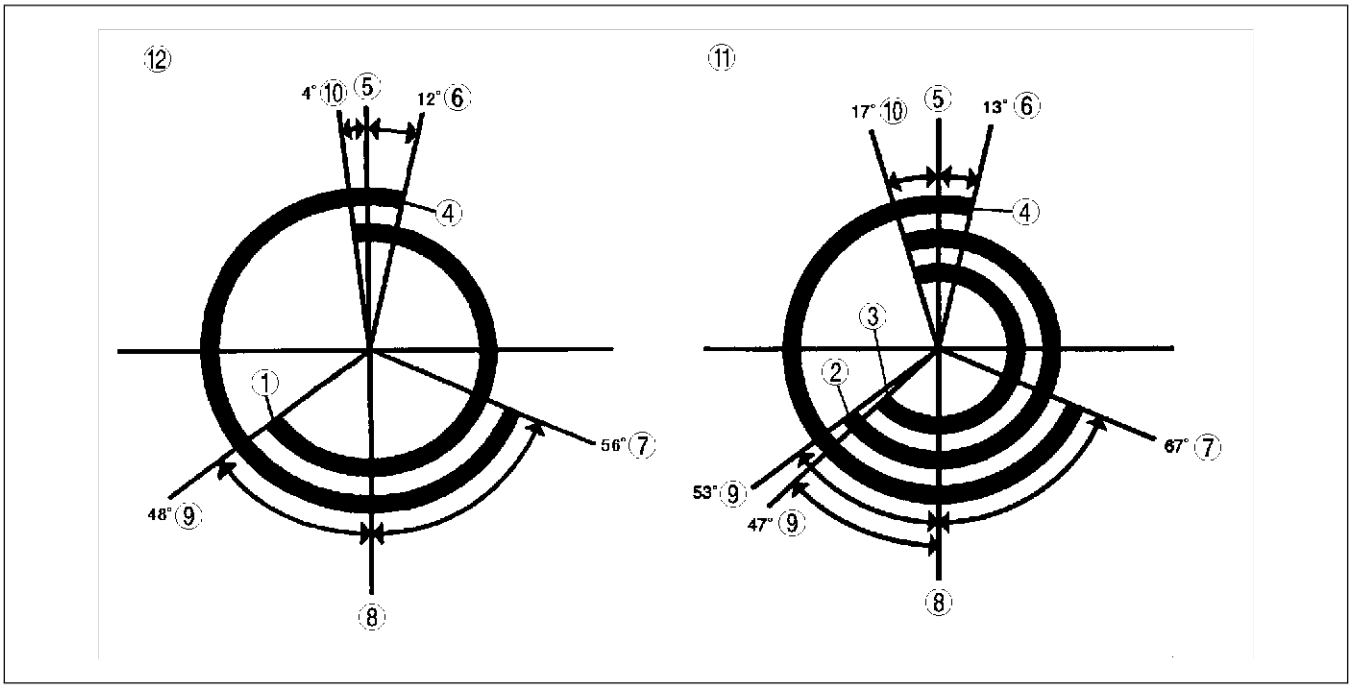

AMU2224S002

1	IN
2	IN (S)
3	IN (P)
4	EX
5	TDC
6	ATDC

7	BBDC
8	BDC
9	ABDC
10	BTDC
11	Previous MPV (LW) GY engine
12	New MPV (LW) AJ engine

End Of Sub

PLUG HOLE PLATE STRUCTURAL VIEW

AME000010100W01

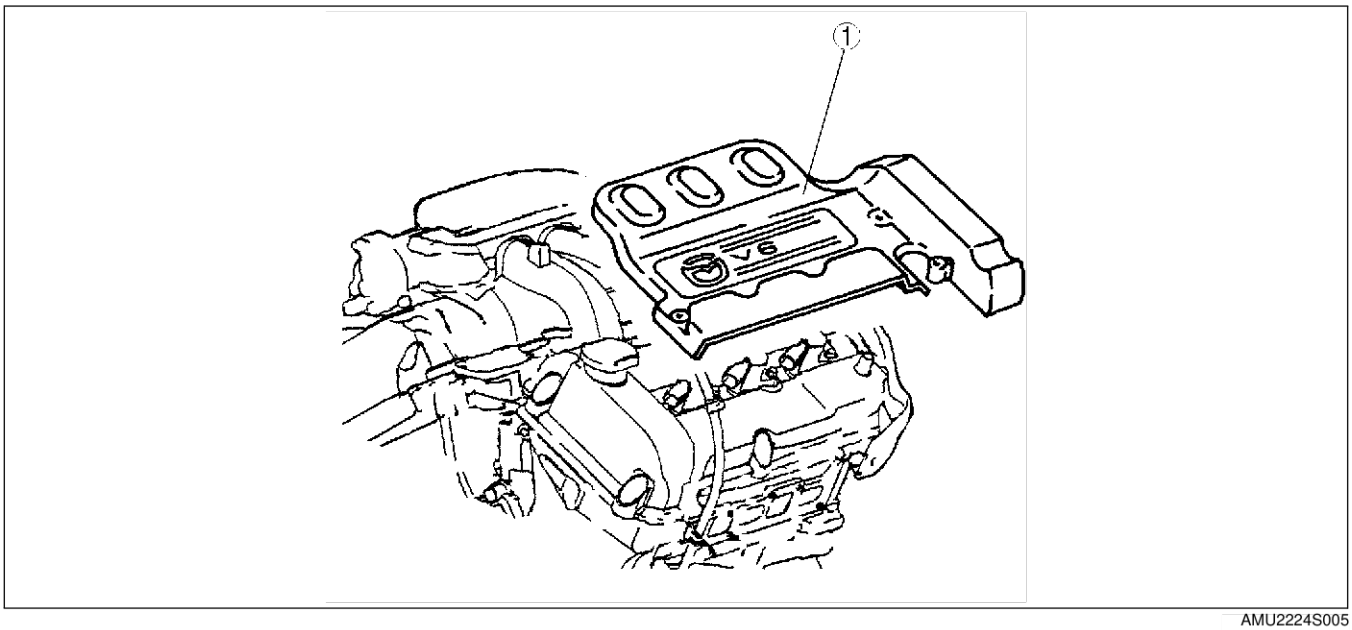

AMU2224S005

1	Plug hole plate

End Of Sub

OUTLINE

SUPPLEMENTAL SERVICE INFORMATION

AME230202000W08

- The following changes and/or additions have been made since publication of the Mazda MPV Workshop Manual (1666-1*-99F).

Timing chain

- Removal/Installation procedure has been added.

Cylinder head gasket

- Removal/Installation procedure has been added.

Hydraulic lash adjuster

- Removal/Installation procedure has been added.

Engine

- Removal/Installation procedure has been added.

End Of Sie

TIMING CHAIN

TIMING CHAIN REMOVAL/INSTALLATION

AME231512201W01

Warning

- **Fuel vapor is hazardous. It can very easily ignite, causing serious injury and damage. Always keep sparks and flames away from fuel.**
- **Fuel line spills and leakage are dangerous. Fuel can ignite and cause serious injures or death and damage. Fuel can also irritate skin and eyes. To prevent this, always complete the "Fuel Line Safety Procedure". (See F4–65 Fuel Line Safety Procedure.)**

1. Disconnect the negative battery cable.
2. Remove the splash shield (RH).
3. Drain the engine oil.
4. Remove the cruise control actuator. (See T–78 CRUISE ACTUATOR REMOVAL/INSTALLATION.)
5. Remove the dynamic chamber. (See F4–60 INTAKE-AIR SYSTEM REMOVAL/INSTALLATION.)
6. Remove the drive belt.
7. Remove the P/S oil pump pulley and P/S oil pump. (See N–13 POWER STEERING OIL PUMP (AJ) REMOVAL/INSTALLATION.)
8. Remove the ignition coils. (See G–15 IGNITION COIL REMOVAL/INSTALLATION.)
9. Remove the TWC (LH). (See F4–81 EXHAUST SYSTEM REMOVAL/INSTALLATION.)
10. Remove the oil pan. (See D–20 OIL PAN REMOVAL/INSTALLATION.)
11. Disconnect the generator, but do not remove it from the vehicle. After disconnection, fix the generator using a rope to prevent it from falling. (See G–11 GENERATOR REMOVAL/INSTALLATION.)
12. Remove the A/C compressor with the A/C pipe connected, and fix the A/C compressor using a rope to prevent it from falling.
13. Remove in the order indicated in the table.
14. Install in the reverse order of removal.
15. Inspect the ignition timing. (See F4–58 IGNITION TIMING INSPECTION.)

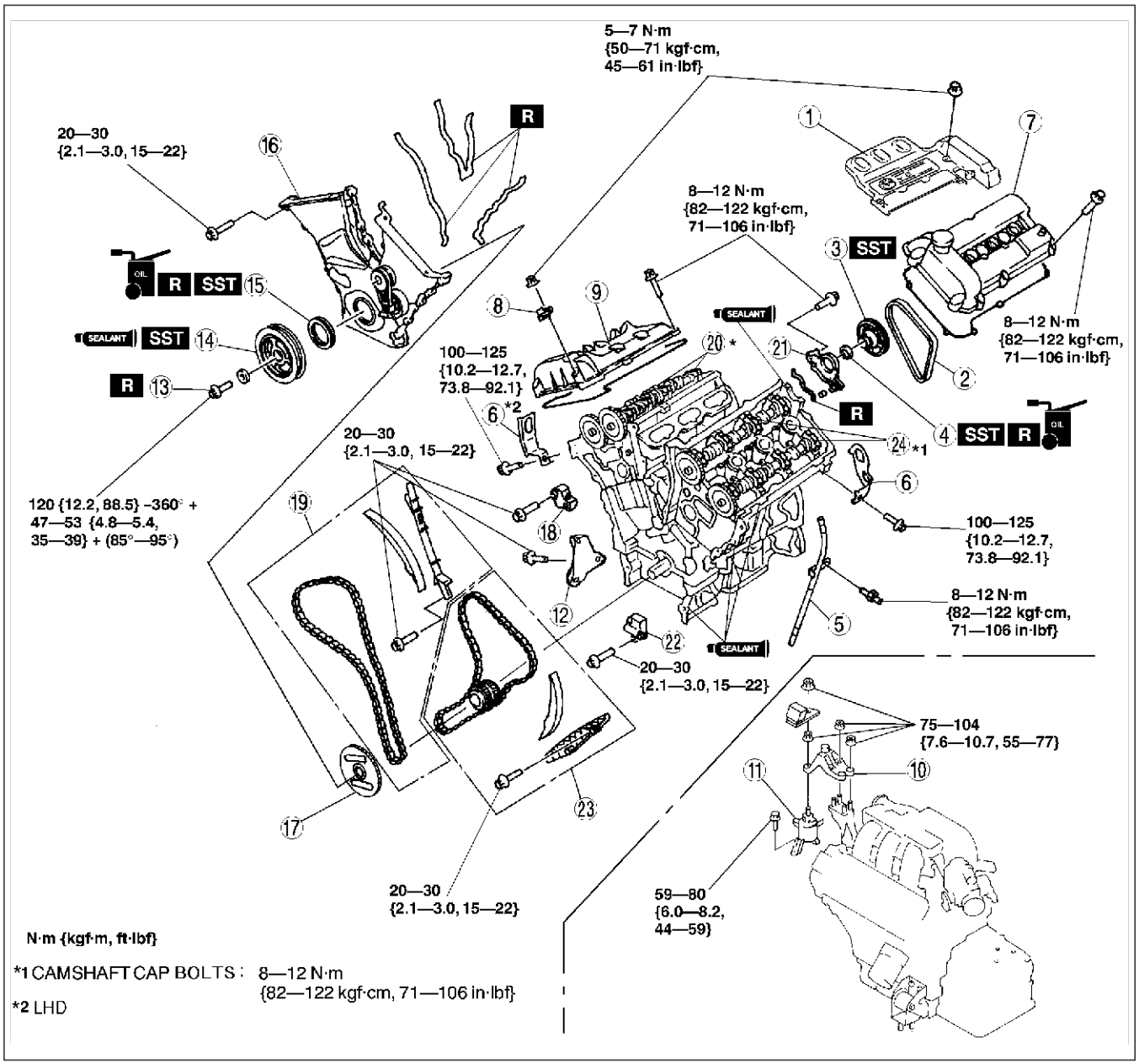

AMU2215W011

1	Plug hole plate
2	Water pump drive belt
3	Water pump drive belt pulley (See B2–9 Water Pump Drive Belt Pulley Removal Note) (See B2–22 Water Pump Drive Belt Pulley Installation Note)
4	Camshaft oil seal (See B2–9 Camshaft Oil Seal Removal Note) (See B2–22 Camshaft Oil Seal Installation Note)
5	Oil level gauge pipe
6	Engine hanger (See B2–9 Engine Hanger Removal Note) (See B2–22 Engine Hanger Installation Note)
7	Cylinder head cover (See B2–10 Cylinder Head Cover (LH) Removal Note) (See B2–22 Cylinder Head Cover (LH) Installation Note)
8	Condenser

9	Cylinder head cover (RH) (See B2–10 Cylinder Head Cover (RH) Removal Note) (See B2–21 Cylinder Head Cover (RH) Installation Note)
10	No.3 engine joint bracket (See B2–10 No.3 Engine Joint Bracket Removal Note (RHD)) (See B2–29 ENGINE REMOVAL/INSTALLATION)
11	No.3 engine mount rubber
12	Generator Bracket
13	Crankshaft pulley lock bolt (See B2–11 Crankshaft Pulley Lock Bolt Removal Note) (See B2–21 Crankshaft Pulley Lock Bolt Installation Note)
14	Crankshaft pulley (See B2–11 Crankshaft Pulley Removal Note) (See B2–21 Crankshaft Pulley Installation Note)

15	Front oil seal (See B2–11 Front Oil Seal Removal Note) (See B2–20 Front Oil Seal Installation Note)
16	Engine front cover (See B2–12 Engine Front Cover Removal Note) (See B2–19 Engine Front Cover Installation Note)
17	Crankshaft position (CKP) sensor pulse wheel (See B2–19 Crankshaft Position (CKP) Sensor Pulse Wheel Installation Note)
18	Chain tensioner (RH) (See B2–18 Chain Tensioner (RH) Installation Note)
19	Timing chain component (RH) (See B2–12 Timing Chain Component (RH) Removal Note) (See B2–17 Timing Chain Component (RH) Installation Note)
20	Camshaft caps (RH) (See B2–13 Camshaft Caps (RH) Removal Note)
21	Camshaft oil seal housing
22	Chain tensioner (LH) (See B2–16 Chain Tensioner (LH) Installation Note)
23	Timing chain component (LH) (See B2–14 Timing Chain Component (LH) Removal Note) (See B2–15 Timing Chain Component (LH) Installation Note)
24	Camshaft caps (LH) (See B2–14 Camshaft Caps (LH) Removal Note)

Water Pump Drive Belt Pulley Removal Note

1. Replace part A of the **SST (49 UN30 3009)** with the **SST (49 UN30 3457)**.

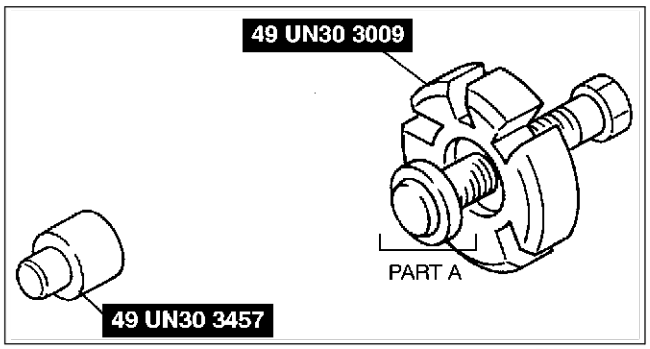

ZMU0110W001

2. Remove the water pump pulley using the **SSTs**.

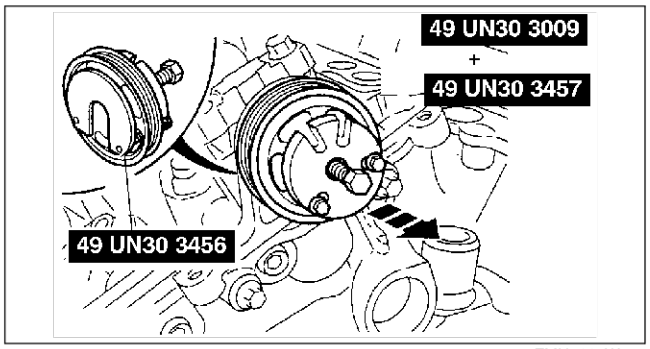

ZMU0110W002

Camshaft Oil Seal Removal Note

1. Cut the oil seal lip using a razor knife.
2. Remove the oil seal using a screwdriver as shown.

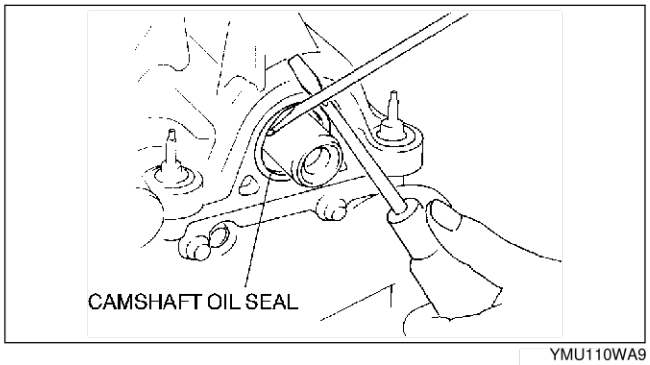

YMU110WA9

Engine Hanger Removal Note

1. Lift up the vehicle and loosen the engine hanger installation bolts from under the vehicle.

Cylinder Head Cover (LH) Removal Note

1. Remove the cylinder head cover bolts in the order shown.

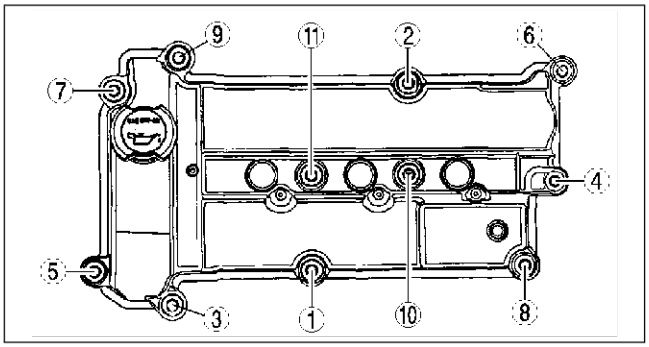

AMU2215W001

Cylinder Head Cover (RH) Removal Note

1. Remove the cylinder head cover bolts in the order shown.

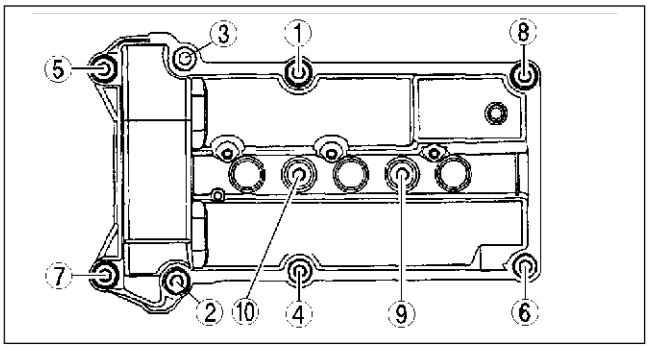

AMU2215W002

No.3 Engine Joint Bracket Removal Note (RHD)

1. Install the **SST** as shown.

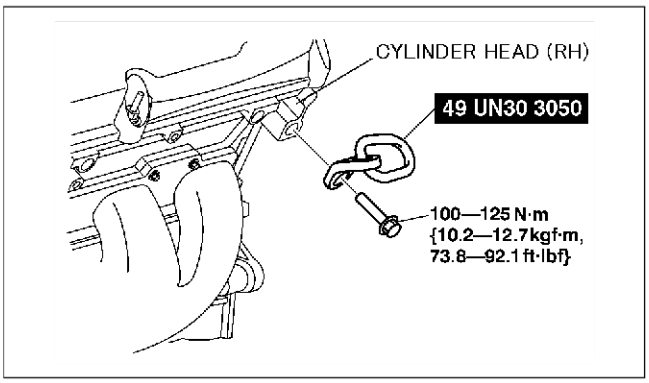

AME2324W001

2. Suspend the engine using the **SSTs**.
3. Remove the No.3 engine joint bracket.

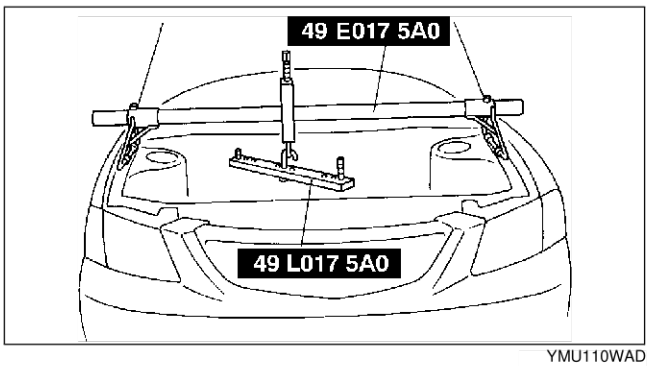

YMU110WAD

Crankshaft Pulley Lock Bolt Removal Note

1. Hold the crankshaft pulley using a commercially available tool and loosen the lock bolt.

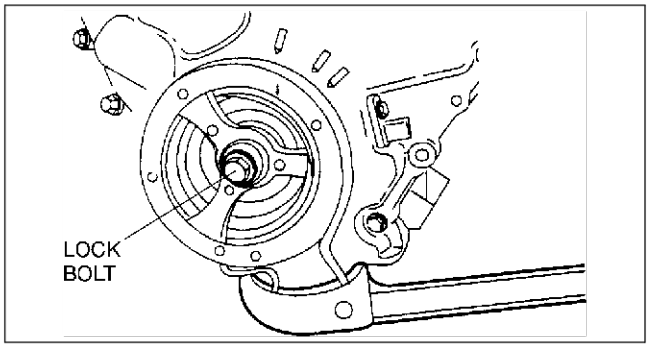

YMU110WAE

Crankshaft Pulley Removal Note

1. Remove the crankshaft pulley using the **SST** and three bolts (**M8 X 1.25 X 45**).

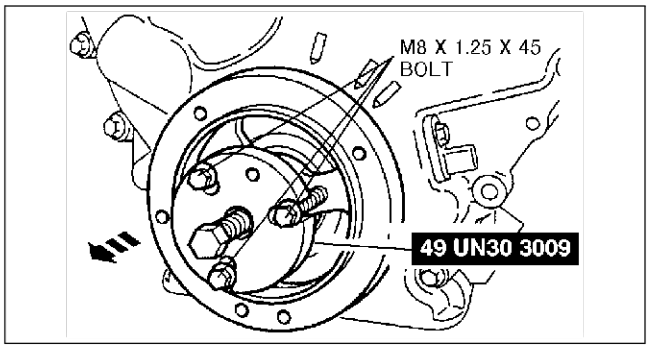

ZMU0110W003

Front Oil Seal Removal Note

1. Remove the front oil seal using a screwdriver as shown.

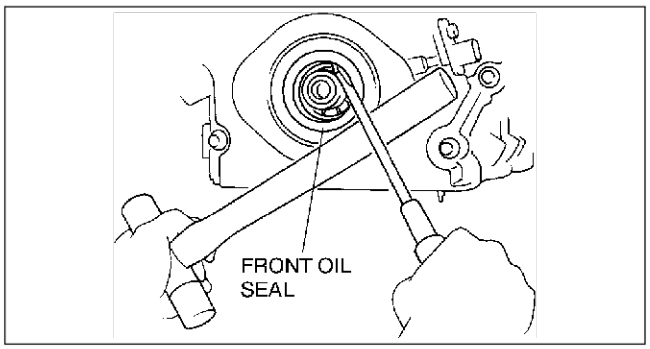

YMU110WAG

Engine Front Cover Removal Note

1. Remove the engine front cover bolts and studs in the order shown.

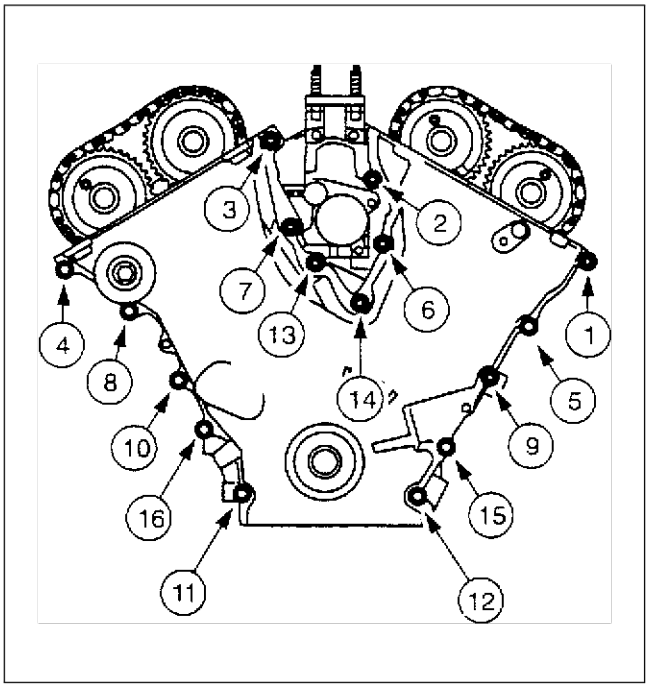

YMU110WAJ

Timing Chain Component (RH) Removal Note

1. Verify that mark on each sprocket is in the TDC position as shown.

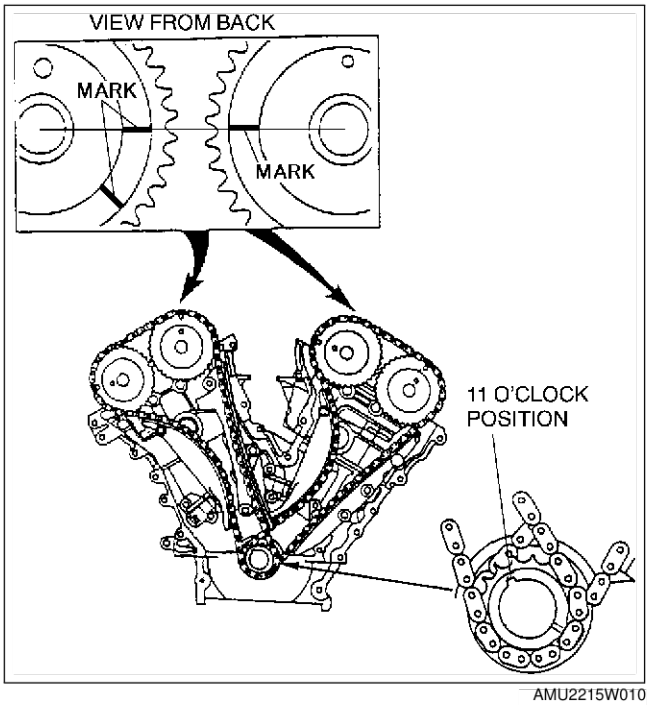

AMU2215W010

2. Turn the crankshaft clockwise so that the crankshaft keyway is in the 3 o'clock position. (The camshafts (RH) are in the neutral position.)

Caution

- **Do not rotate the crankshaft counterclockwise. The timing chains may bind, causing engine damage.**

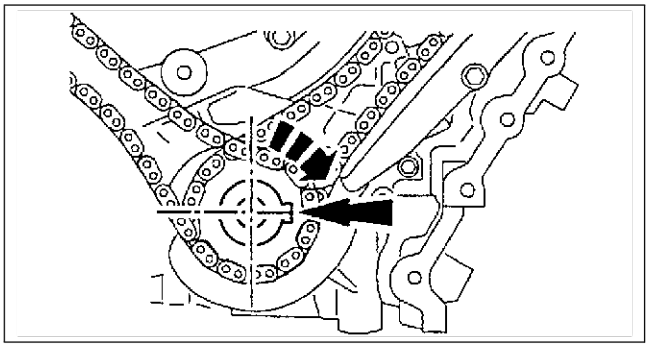

YMU110WAL

3. Remove the timing chain (RH) in the following order.
   (1) Chain tensioner
   (2) Tensioner arm
   (3) Timing chain
   (4) Chain guide

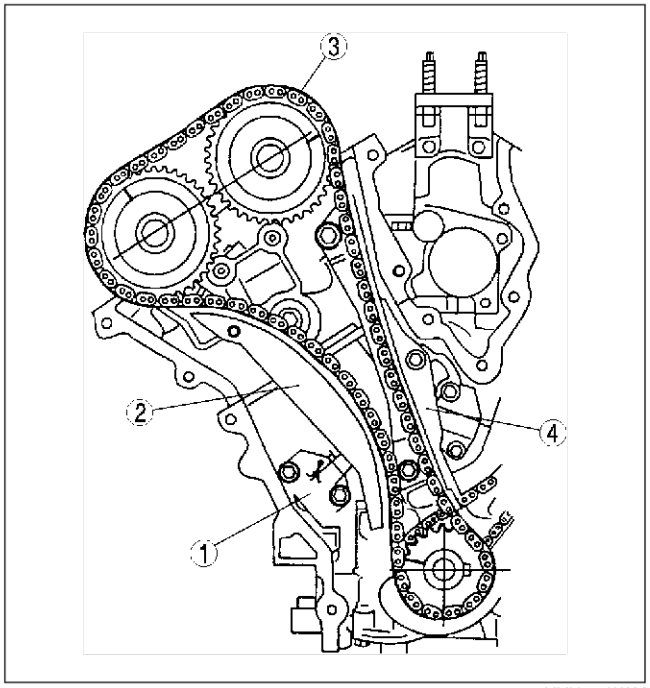

YMU110WAM

Camshaft Caps (RH) Removal Note

Caution
- **Cylinder head and the camshaft bearing caps are numbered to make sure they are assembled in their original position. When removed, keep the bearing caps with the cylinder head they were removed from together. Do not mix the caps.**

1. Remove the RH camshaft thrust caps 1R and 5R.

Caution
- **Remove the camshaft bearing thrust caps Nos. 1R and 5R first. Do not loosen any of the other bolts until the thrust caps are removed, or damage to the thrust caps may occur.**

Note
- Loosen bolts using several passes. Do not remove bolts completely.

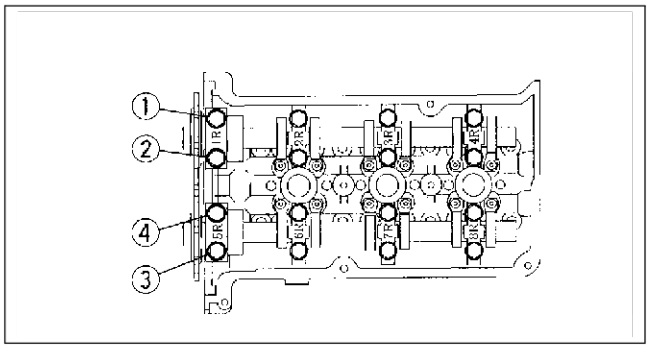

YMU110WBU

2. Loosen the remaining bolts 7–8 turns in the indicated sequence in several passes to allow the camshafts (RH) to be slowly raised.

Note
- Be sure not to loosen any of the other bolts until the thrust caps are removed.

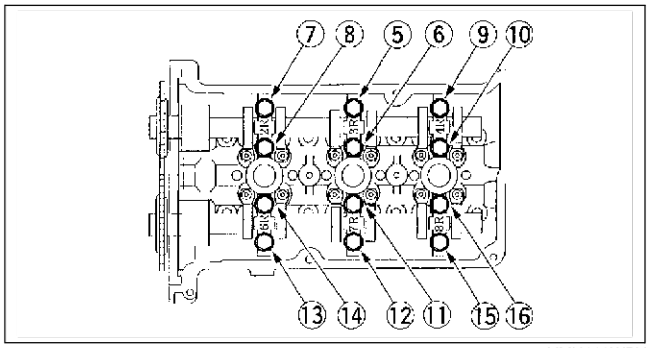

YMU110WBV

Timing Chain Component (LH) Removal Note

1. Rotate the crankshaft clockwise 1 and 2/3 turns until the keyway is in the 11 o'clock position.

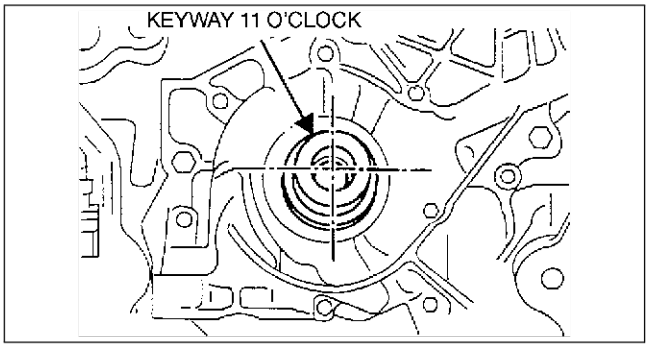

YMU110WC9

2. Remove the timing chain (LH) in the following order.
   (1) Chain tensioner
   (2) Tensioner arm
   (3) Timing chain
   (4) Chain guide
   (5) Timing chain crankshaft sprocket

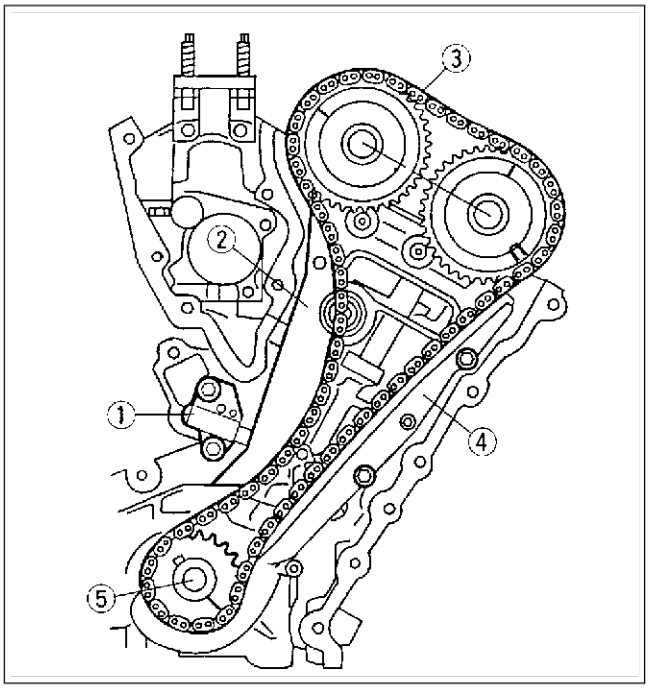

YMU110WAQ

Camshaft Caps (LH) Removal Note

Caution

- **Cylinder head and the camshaft bearing caps are numbered to make sure they are assembled in their original position. When removed, keep the bearing caps with the cylinder head they were removed from. Do not mix the caps.**
- **Remove the camshaft bearing thrust caps Nos. 1L and 5L first. Do not loosen any of the other bolts until the thrust caps are removed, or damage to the thrust caps may occur.**

Note

- Be sure not to loosen any of the other bolts until the thrust caps are removed.

1. Remove the camshaft (LH) thrust caps 1L and 5L.

Note

- Loosen bolts using several passes. Do not remove bolts completely.

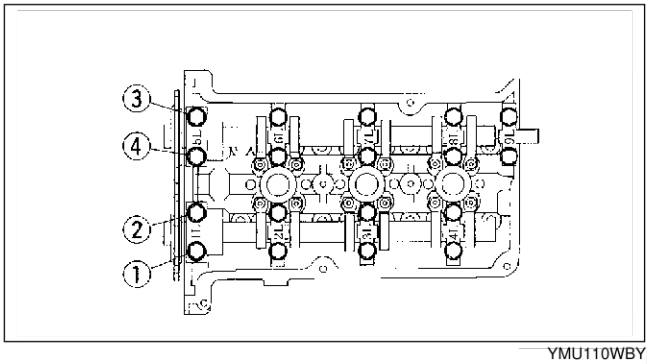

YMU110WBY

2. Loosen the remaining bolts 7—8 turns in the indicated sequence to allow the camshaft (LH) to rise.

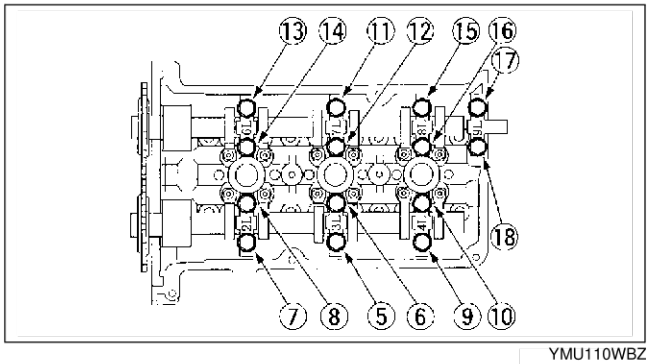

YMU110WBZ

Timing Chain Component (LH) Installation Note

1. Verify that the crankshaft keyway is at 11 o'clock position.
2. Position the mark on the intake camshaft to 9 o'clock position.

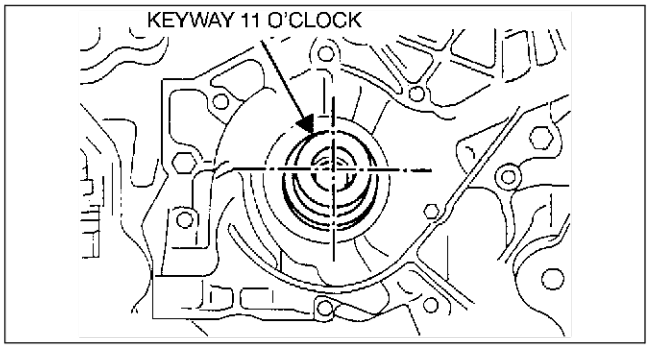

YMU110WC9

3. Position the mark on the exhaust camshaft to 12 o'clock position.

Note

- Install the timing chain by aligning the colored links on the timing chain with the marks on the timing sprockets.

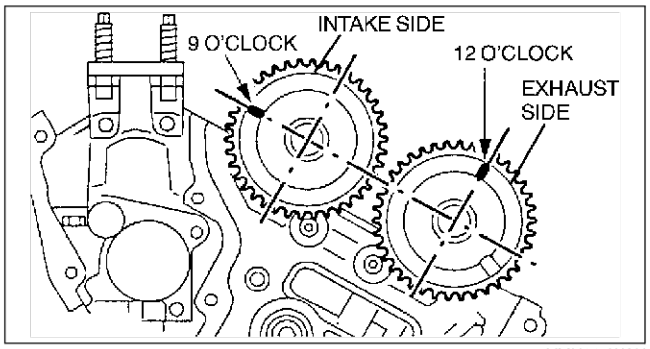

YMU110WAU

4. Install the timing chain (LH) in the following order.
   (1) Timing chain crankshaft sprocket
   (2) Chain guide
   (3) Timing chain
   (4) Tensioner arm

Caution

- **Install the camshaft journal thrust caps last, or damage to the thrust caps may occur.**

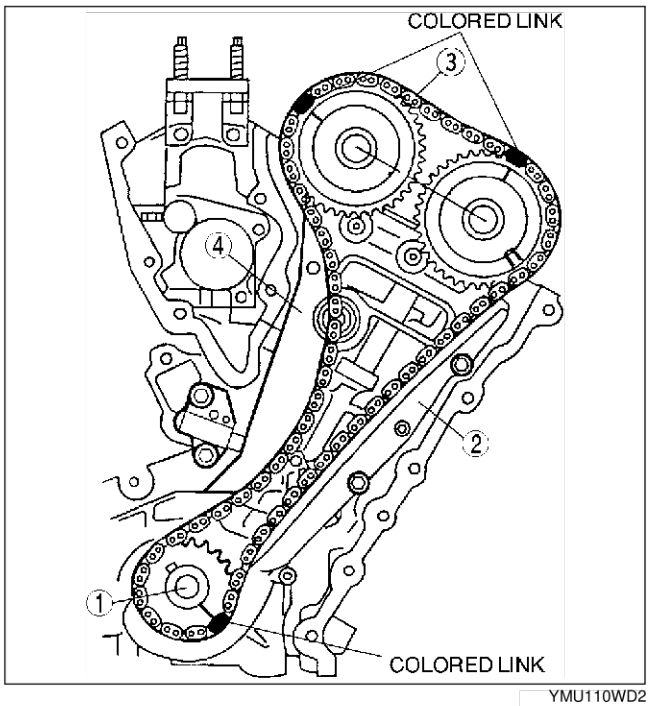

YMU110WD2

5. Tighten the bearing caps evenly in the order shown in several passes.

Note
- After adjusting the camshaft end play using the thrust caps 1L and 5L, tighten the other bearing caps.

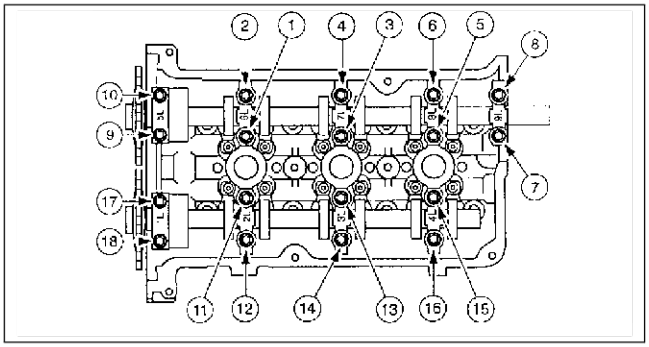

YMU110WAS

Chain Tensioner (LH) Installation Note

1. Set the chain tensioner (LH) in a vise with jaw protectors.

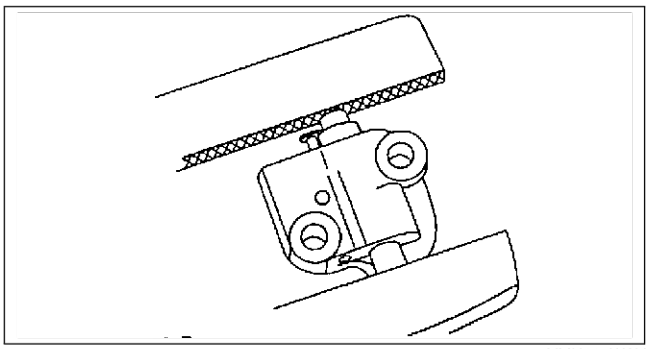
YMU110WAV

2. Using a thin screwdriver, hold the chain tensioner (LH) ratchet lock mechanism away from the ratchet stem.

Note
- The piston should retract with minimal force. If binding occurs, remove the tensioner from the vise and reset it in the vise.

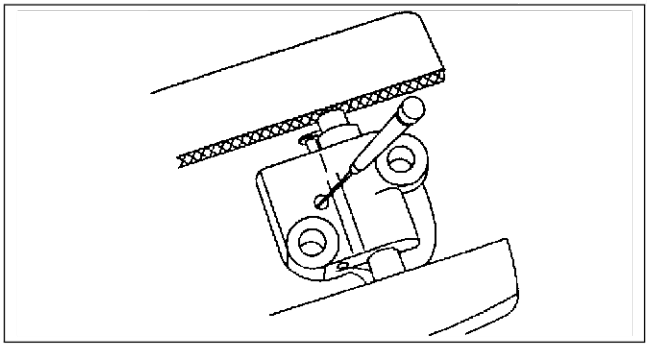
YMU110WAW

3. Slowly compress the tensioner piston.

4. Hold the tensioner piston using a **1.5 mm {0.059 in}** wire or paper clip.

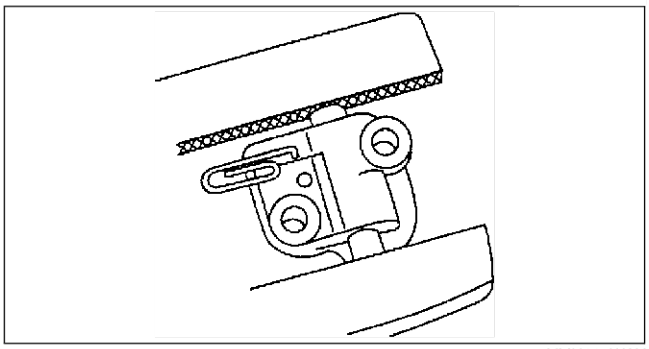
YMU110WAX

5. Install the chain tensioner (LH) and remove the retaining wire.

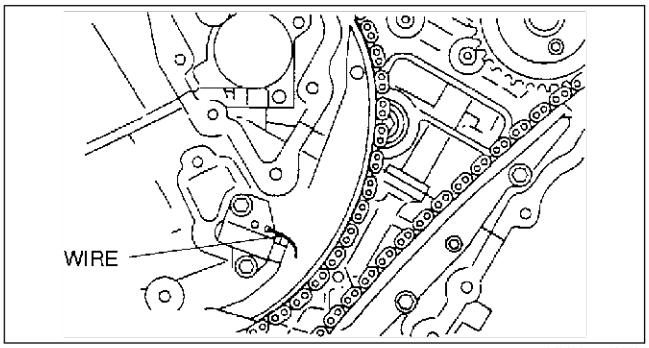

YMU110WAY

Timing Chain Component (RH) Installation Note

1. Rotate the crankshaft clockwise until the keyway is in the 3 o'clock position.
2. Position the mark on the exhaust camshaft to 12 o'clock position.

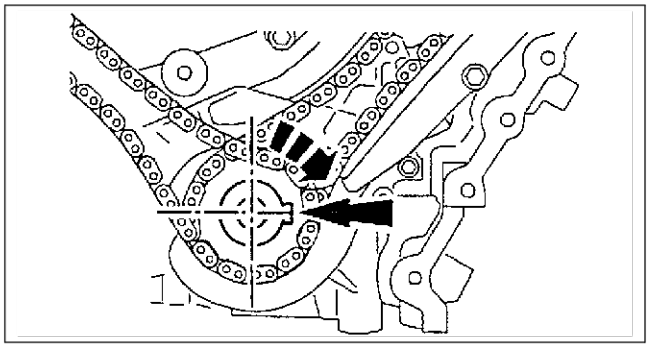

YMU110WAL

3. Position the mark on the intake camshaft to 3 o'clock position.

Note

- Install the timing chain (RH) by aligning the colored links on the timing chain (RH) with the marks on the timing sprockets.

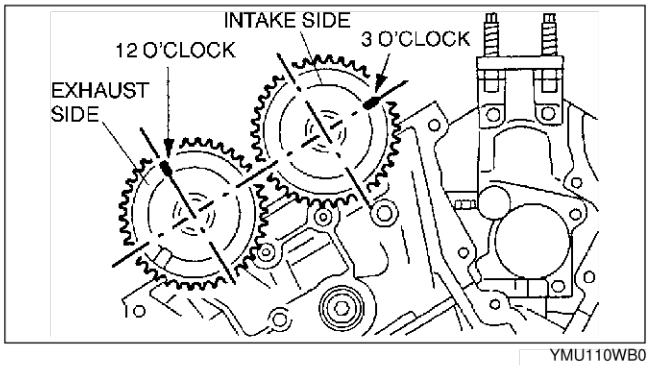

YMU110WB0

4. Install the timing chain (RH) in the following order.
   (1) Chain guide
   (2) Timing chain
   (3) Tensioner arm

Caution

- **Install the camshaft journal thrust cap last, or damage to the thrust cap may occur.**

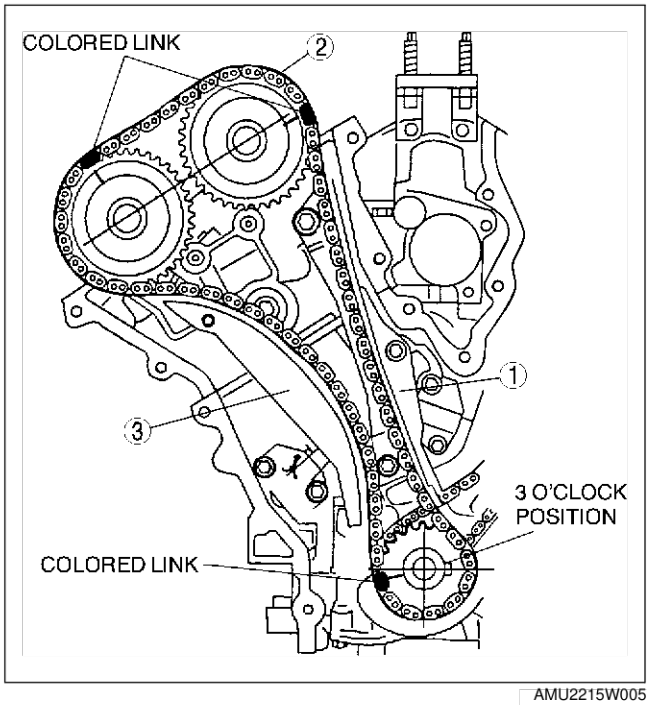

AMU2215W005

5. Tighten the bearing caps evenly in several passes in the order shown.

Note

- After adjusting the camshaft end play using the thrust caps 1R and 5R, tighten the other bearing caps.

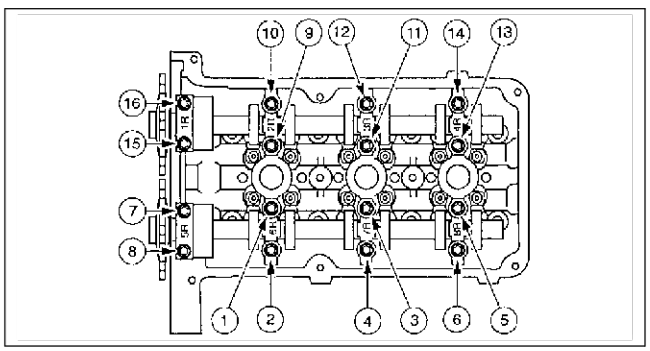

YMU110WB1

Chain Tensioner (RH) Installation Note

1. Set the chain tensioner (RH) in a vise with jaw protectors.

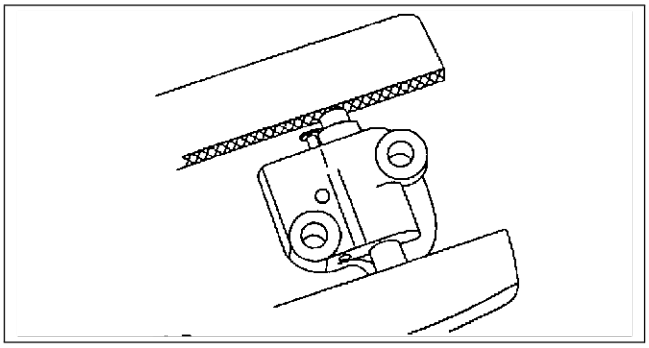

YMU110WAV

2. Using a thin screwdriver, hold the chain tensioner (RH) ratchet lock mechanism away from the ratchet stem.

   Note
   - The piston should retract with minimal force. If binding occurs, remove the tensioner from the vise and reset it in the vise.

3. Slowly compress the tensioner piston.

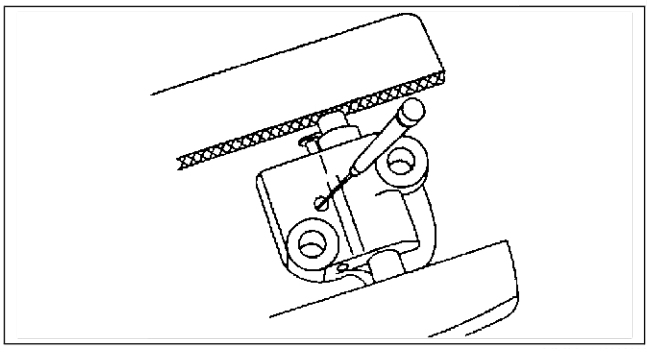

YMU110WAW

4. Hold the tensioner piston using a **1.5 mm {0.059 in}** wire or paper clip.

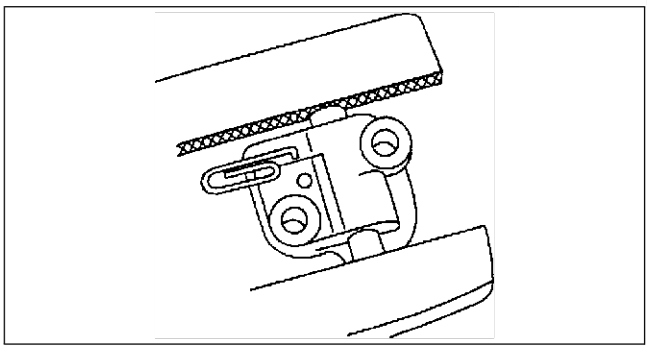

YMU110WAX

5. Install the chain tensioner (RH) and remove the retaining wire.

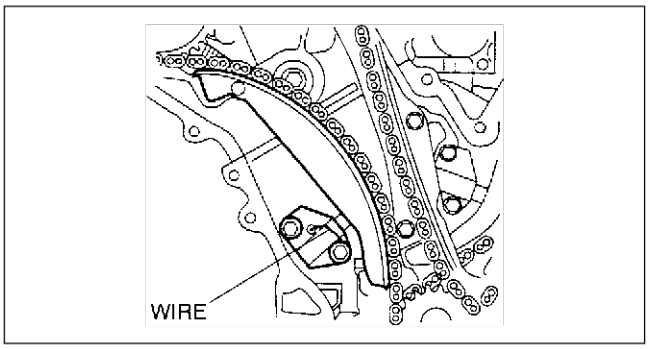

YMU110WB2

6. Rotate the crankshaft clockwise 1 and 2/3 turns until the key is in the 11 o'clock position.
7. Verify that the marks on the back of the camshaft sprockets are aligned.

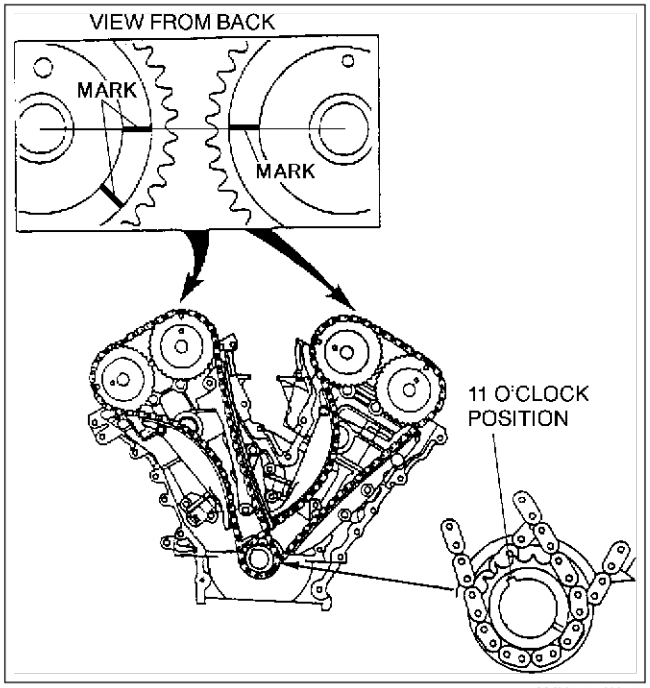

AMU2215W010

Crankshaft Position (CKP) Sensor Pulse Wheel Installation Note

1. Use the keyway marked 25/34Y (blue paint stripe) to install the rotor with the indentation towards the front.

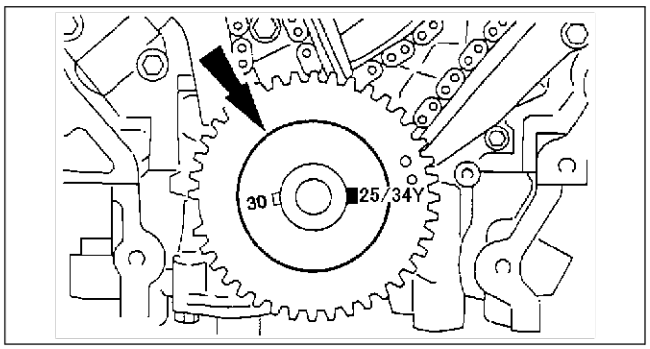

AMU2215W006

Engine Front Cover Installation Note

1. Apply a **6 mm {0.24 in}** dot of silicone sealant at the indicated location.

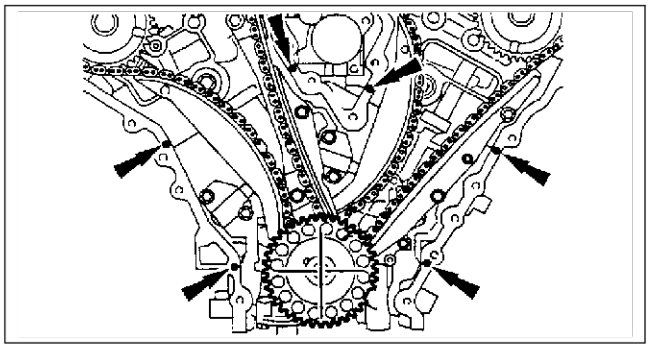
YMU110WB5

2. Install the remaining bolts and studs, and then tighten all bolts and studs in the order shown.

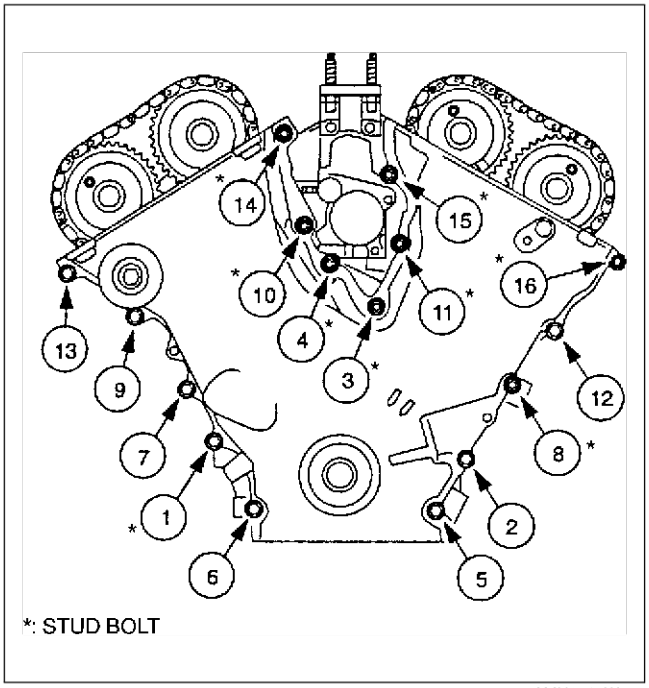

AMU2215W007

Front Oil Seal Installation Note

1. Assemble the front oil seal using part A of the **SST (49 UN30 3335)** and the **SST (49 UN01 002)** in the following order.
2. Apply clean engine oil to the oil seal.
3. Push the oil seal slightly in by hand.

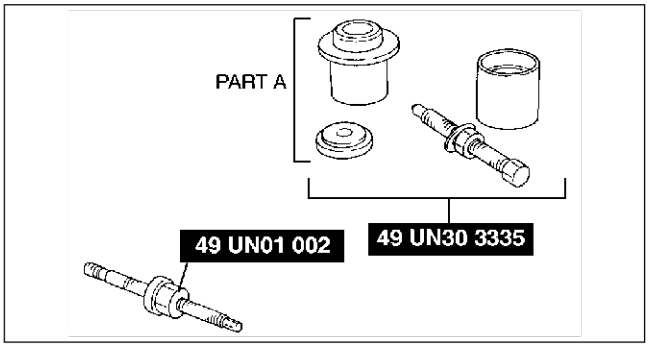

ZMU0110W004

4. Compress the oil seal using the **SSTs**.

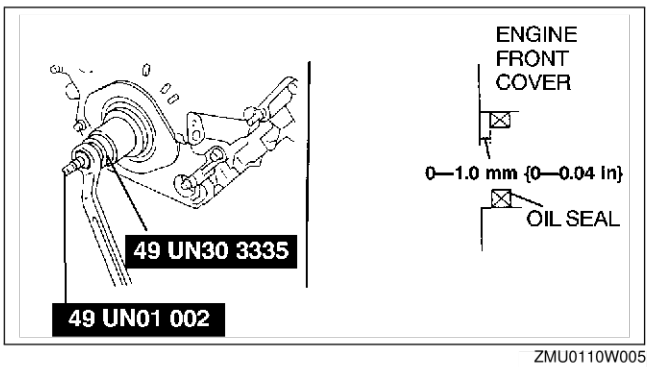

ZMU0110W005

Crankshaft Pulley Installation Note

1. Seal the keyway in the crankshaft pulley using silicone sealant.
2. Install the crankshaft pulley using the **SST** and the crankshaft pulley lock bolt washer.

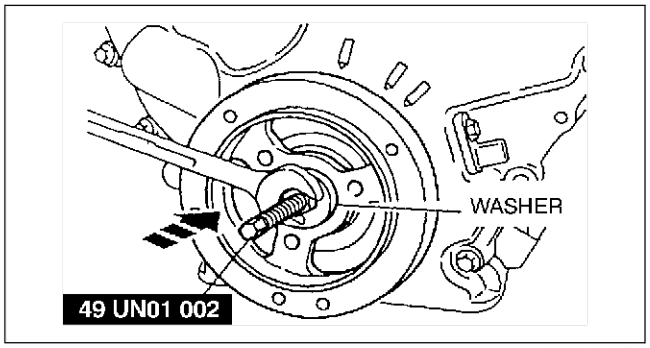

YMU110WB9

Crankshaft Pulley Lock Bolt Installation Note

1. Hold the crankshaft pulley using a commercially available tool.
2. Tighten the new crankshaft pulley lock bolt in four steps.
   (1) Tighten to **120 N·m {12.2 kgf·m, 88.5 ft·lbf}**.
   (2) Loosen **360°** (one full turn) in reverse order.
   (3) Tighten to **47—53 N·m {4.8—5.4 kgf·m, 35—39 ft·lbf}**.
   (4) Tighten **85°—95°**.

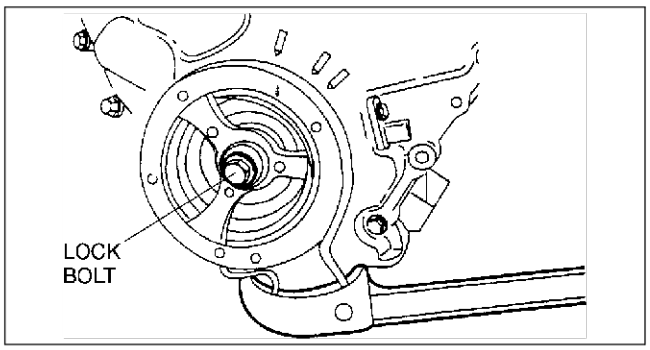

YMU110WAE

Cylinder Head Cover (RH) Installation Note

1. Apply silicone sealant to the mating faces as shown.
2. Install the cylinder head cover with a new gasket.

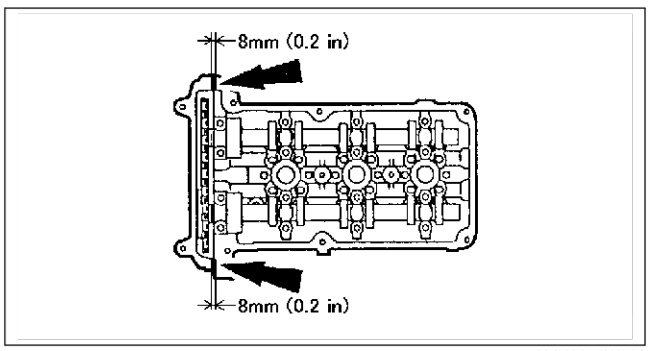

AMU2215W008

3. Tighten the bolts in the order shown.

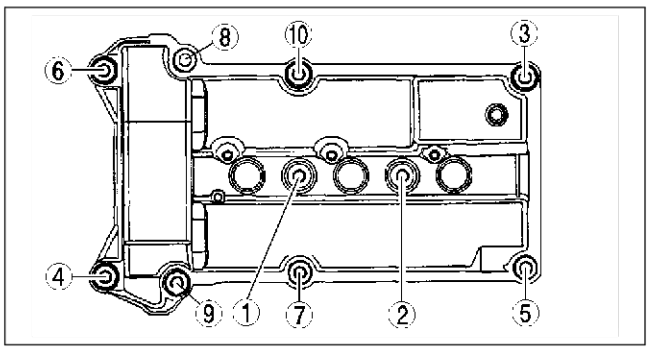

AMU2215W003

Cylinder Head Cover (LH) Installation Note

1. Apply silicone sealant to the mating faces as shown.
2. Install the cylinder head cover with a new gasket.

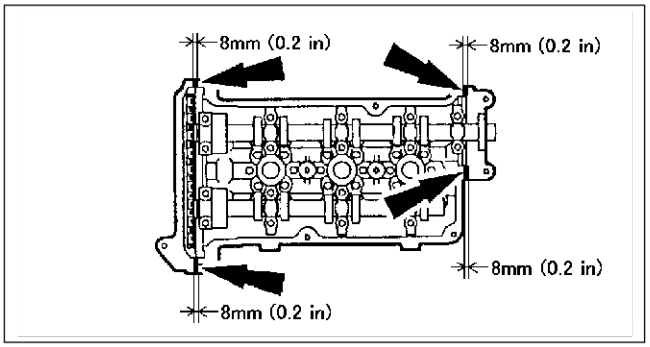

AMU2215W009

3. Tighten the bolts in the order shown.

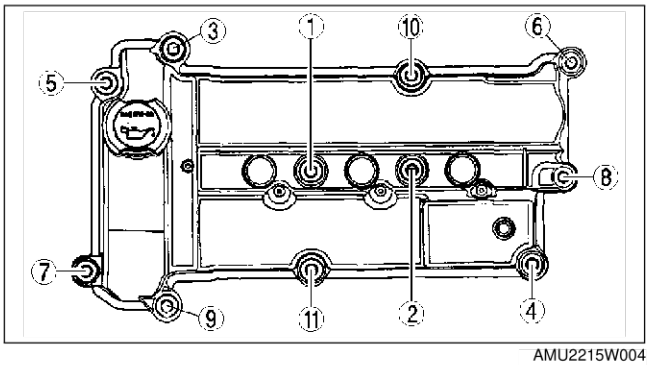

AMU2215W004

Engine Hanger Installation Note

1. Lift up the vehicle and tighten the engine hanger installation bolts from under the vehicle.

Camshaft Oil Seal Installation Note

1. Apply clean engine oil to the camshaft oil seal.
2. Install the camshaft oil seal using the **SSTs**.

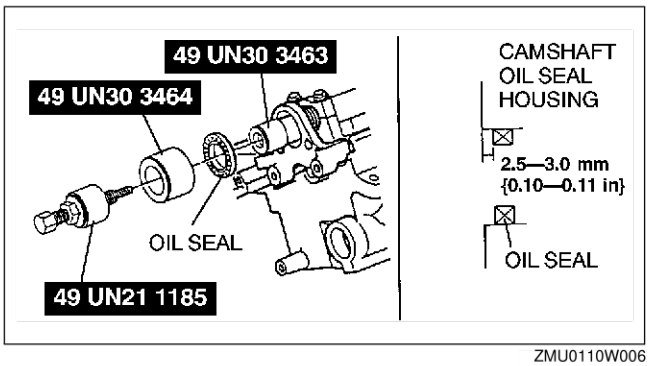

ZMU0110W006

Water Pump Drive Belt Pulley Installation Note

1. Install the water pump pulley using the **SST**.

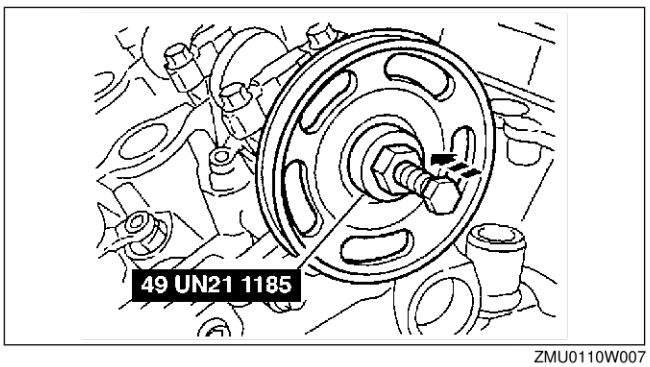

ZMU0110W007

End Of Sie

CYLINDER HEAD GASKET

CYLINDER HEAD GASKET REPLACEMENT

AME231810271W01

Warning

- **Fuel vapor is hazardous. It can very easily ignite, causing serious injury and damage. Always keep sparks and flames away from fuel.**
- **Fuel line spills and leakage are dangerous. Fuel can ignite and cause serious injuries or death and damage. Fuel can also irritate skin and eyes. To prevent this, always complete the "Fuel Line Safety Procedure". (See F4–65 Fuel Line Safety Procedure.)**

1. Drain the engine coolant.
2. Remove the water pump. (See E–18 WATER PUMP REMOVAL/INSTALLATION.)
3. Remove the timing chain. (See B2–7 TIMING CHAIN REMOVAL/INSTALLATION.)
4. Install the No.3 engine mount rubber and joint bracket. (See B2–7 TIMING CHAIN REMOVAL/INSTALLATION.)
5. Remove in the order indicated in the table.
6. Install in the reverse order of removal.

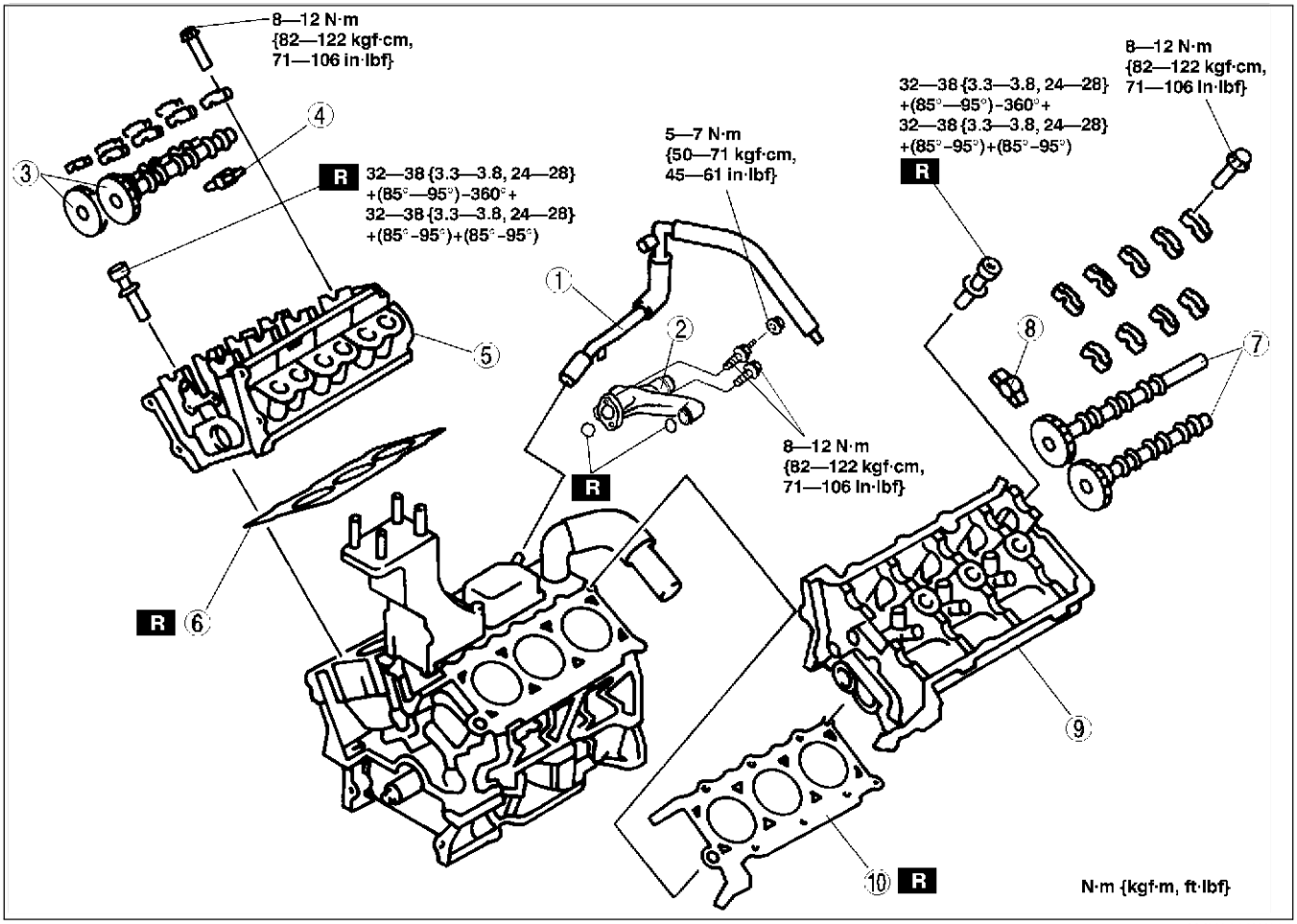

AMU2218W001

1	Ventilation pipe
2	Water bypass tube (See B2–24 Water Bypass Tube Removal Note)
3	Camshaft (RH) (See B2–24 Camshaft (RH) Removal Note) (See B2–25 Camshaft (RH) Installation Note)
4	Rocker arm (RH)
5	Cylinder head (RH) (See B2–24 Cylinder Head (RH) Removal Note) (See B2–25 Cylinder Head (RH) Installation Note)
6	Cylinder head gasket (RH)

7	Camshaft (LH) (See B2–24 Camshaft (LH) Removal Note) (See B2–25 Camshaft (LH) Installation Note)
8	Rocker arm (LH)
9	Cylinder head (LH) (See B2–25 Cylinder Head (LH) Removal Note) (See B2–25 Cylinder Head (LH) Installation Note)
10	Cylinder head gasket (LH)

Water Bypass Tube Removal Note

1. Remove the water bypass tube installation stud bolt and bolt and disconnect the water bypass tube from the cylinder head.

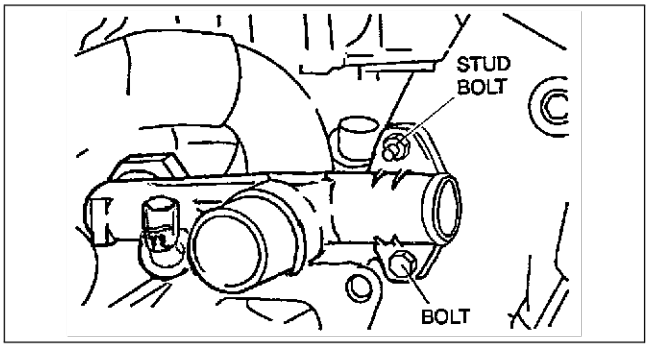

AMU2218W002

Camshaft (RH) Removal Note

Caution

- **Remove the camshaft bearing thrust caps Nos. 1R and 5R first. Do not loosen any of the other bolts until the thrust caps are removed, or damage to the thrust caps may occur.**

Note

- The cylinder head and the camshaft bearing caps are numbered to make sure they are reassembled in their original position. When removed, keep the bearing caps with the cylinder head they were removed from. Do not mix the caps.

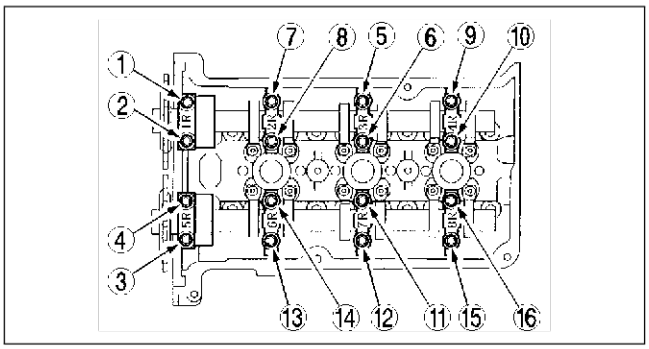

YMU110WAN

Cylinder Head (RH) Removal Note

1. Loosen the cylinder head bolts in several passes in the order shown.

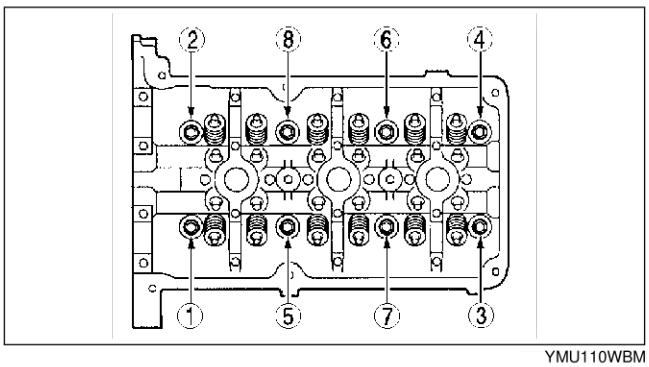

YMU110WBM

Camshaft (LH) Removal Note

Caution

- **Remove the camshaft bearing thrust caps Nos. 1L and 5L first. Do not loosen any of the other bolts until the thrust caps are removed, or damage to the thrust caps may occur.**

Note

- The cylinder head and the camshaft bearing caps are numbered to make sure they are reassembled in their original position. When removed, keep the bearing caps with the cylinder head they were removed from. Do not mix the caps.

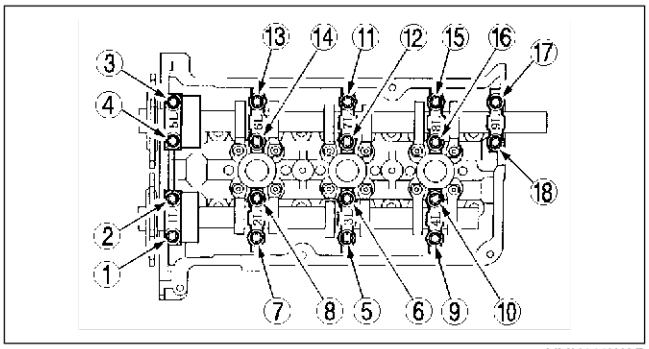

YMU110WAR

Cylinder Head (LH) Removal Note

1. Loosen the cylinder head bolts in several passes in the order shown.

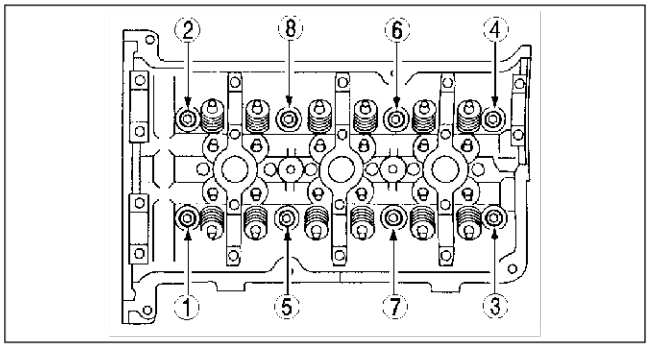

YMU110WBN

Cylinder Head (LH) Installation Note

1. Tighten the cylinder head bolts in the order shown using the following 6 steps.
   (1) Tighten to **32—38 N·m {3.3—3.8 kgf·m, 24—28 ft·lbf}**.
   (2) Tighten **85°—95°**.
   (3) Loosen **360°** (one full turn) in reverse order.
   (4) Tighten to **32—38 N·m {3.3—3.8 kgf·m, 24—28 ft·lbf}**.
   (5) Tighten **85°—95°**.
   (6) Tighten **85°—95°**.

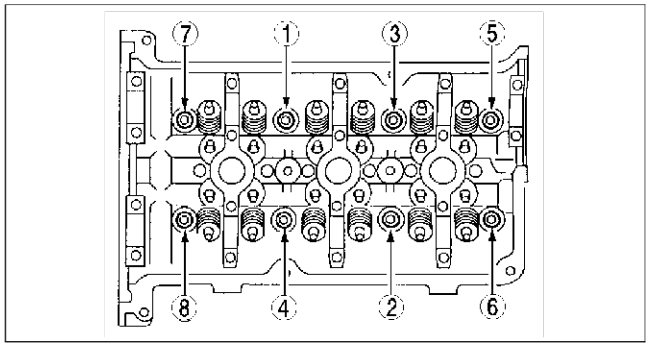

YMU110WBP

Camshaft (LH) Installation Note

1. Install the camshaft (LH) referring to Timing Chain Component (LH) Installation Note in TIMING CHAIN REMOVAL/INSTALLATION. (See B2–15 Timing Chain Component (LH) Installation Note.)

Cylinder Head (RH) Installation Note

1. Tighten the cylinder head bolts in the order shown using the following 6 steps.
   (1) Tighten to **32—38 N·m {3.3—3.8 kgf·m, 24—28 ft·lbf}**.
   (2) Tighten **85°—95°**.
   (3) Loosen **360°** (one full turn) in reverse order.
   (4) Tighten to **32—38 N·m {3.3—3.8 kgf·m, 24—28 ft·lbf}**.
   (5) Tighten **85°—95°**.
   (6) Tighten **85°—95°**.

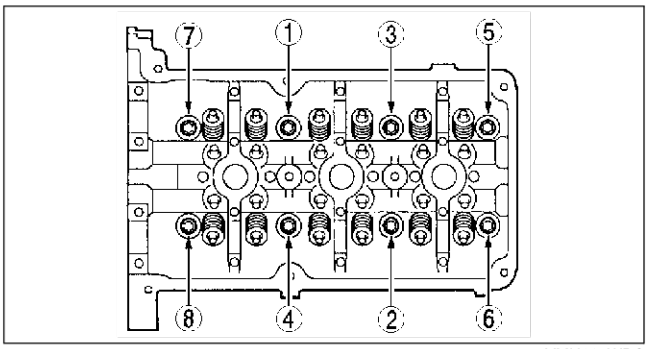

YMU110WBQ

Camshaft (RH) Installation Note

1. Install the camshaft (RH) referring to Timing Chain Component (RH) Installation Note in TIMING CHAIN REMOVAL/INSTALLATION. (See B2–17 Timing Chain Component (RH) Installation Note.)

HYDRAULIC LASH ADJUSTER (HLA)

HYDRAULIC LASH ADJUSTER (HLA) REMOVAL/INSTALLATION

AME231912100W01

1. Disconnect the negative battery cable.
2. Remove the splash shield (RH).
3. Remove the dynamic chamber. (See F4–60 INTAKE-AIR SYSTEM REMOVAL/INSTALLATION.)
4. Remove the drive belt.
5. Remove the ignition coils. (See G–15 IGNITION COIL REMOVAL/INSTALLATION.)
6. Remove the water pump drive belt.
7. Remove the water pump drive belt pulley. (See B2–9 Water Pump Drive Belt Pulley Removal Note.) (See B2–22 Water Pump Drive Belt Pulley Installation Note.)
8. Remove the camshaft oil seal. (See B2–9 Camshaft Oil Seal Removal Note.) (See B2–22 Camshaft Oil Seal Installation Note.)
9. Remove the camshaft oil seal housing.
10. Remove in the order indicated in the table.
11. Install in the reverse order of removal.

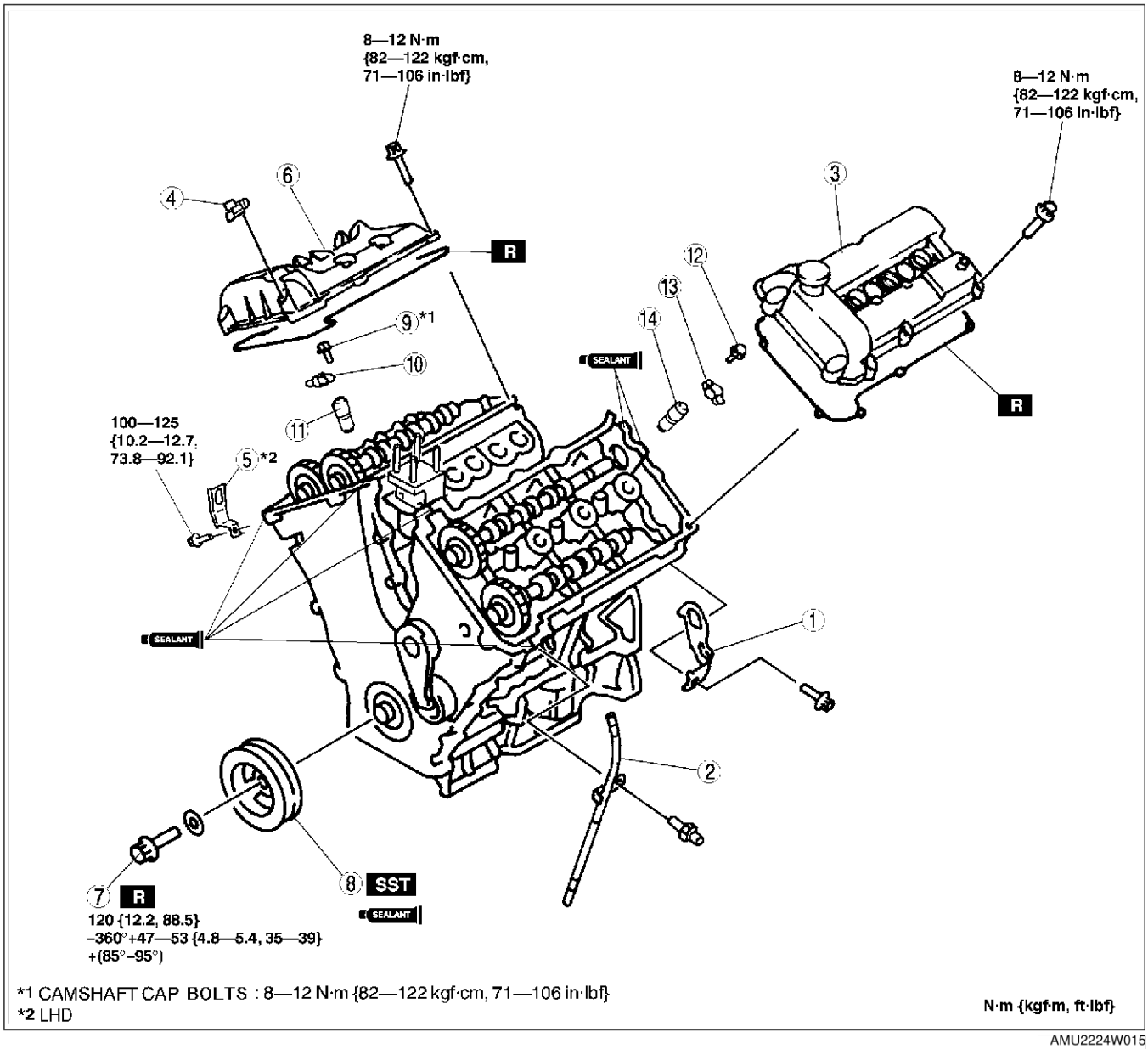

AMU2224W015

1	Engine hanger (LH) (See B2–9 Engine Hanger Removal Note) (See B2–22 Engine Hanger Installation Note)
2	Oil level gauge pipe
3	Cylinder head cover (LH) (See B2–10 Cylinder Head Cover (LH) Removal Note) (See B2–22 Cylinder Head Cover (LH) Installation Note)
4	Condenser
5	Engine hanger (RH) (See B2–9 Engine Hanger Removal Note) (See B2–22 Engine Hanger Installation Note)
6	Cylinder head cover (RH) (See B2–10 Cylinder Head Cover (RH) Removal Note) (See B2–21 Cylinder Head Cover (RH) Installation Note)
7	Crankshaft pulley lock bolt (See B2–11 Crankshaft Pulley Lock Bolt Removal Note) (See B2–21 Crankshaft Pulley Lock Bolt Installation Note)
8	Crankshaft pulley (See B2–11 Crankshaft Pulley Removal Note) (See B2–21 Crankshaft Pulley Installation Note)
9	Camshaft cap bolts (RH) (See B2–27 Camshaft Caps (RH) Removal Note) (See B2–28 Camshaft Caps (RH) Installation Note)
10	Rocker arm (RH) (See B2–27 Rocker Arm (RH) Removal Note)
11	HLA (RH)
12	Camshaft cap bolts (LH) (See B2–27 Camshaft Caps (LH) Removal Note) (See B2–28 Camshaft Caps (LH) Installation Note)
13	Rocker arm (LH) (See B2–28 Rocker Arm (LH) Removal Note)
14	HLA (LH)

Camshaft Caps (RH) Removal Note

1. Perform Step 1 and 2 in TIMING CHAIN REMOVAL/INSTALLATION, Timing Chain Component (RH) Removal Note. (See B2–12 Timing Chain Component (RH) Removal Note.)
2. Perform the same procedures as TIMING CHAIN REMOVAL/INSTALLATION, Camshaft Caps (RH) Removal Note. (See B2–13 Camshaft Caps (RH) Removal Note.)

Rocker Arm (RH) Removal Note

Note

- If the rocker arm and HLA are to be reused, mark their positions to make sure they are assembled in the original location.
- Take care not to let the rocker arm slip into the timing chain cover when removing the rocker arm from engine front.

1. Lift the camshaft slightly.
2. Remove the twelve rocker arms.

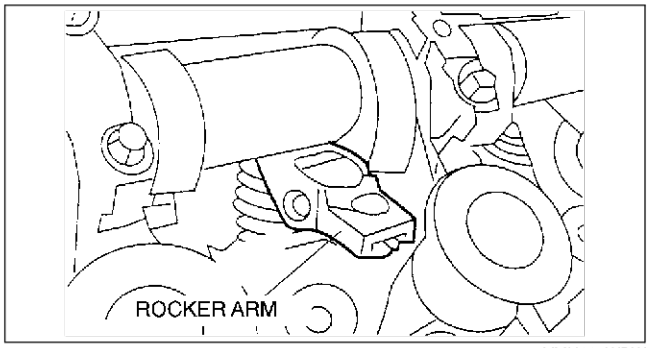

YMU110WBW

Camshaft Caps (LH) Removal Note

1. Perform Step 1 in TIMING CHAIN REMOVAL/INSTALLATION, Timing Chain Component (LH) Removal Note. (See B2–14 Timing Chain Component (LH) Removal Note.)
2. Perform the same procedures as TIMING CHAIN REMOVAL/INSTALLATION, Camshaft Caps (LH) Removal Note. (See B2–14 Timing Chain Component (LH) Removal Note.)

Rocker Arm (LH) Removal Note

Note
- If the rocker arm and HLA are to be reused, mark their positions to make sure they are assembled in the original location.
- Take care not to let the rocker arm slip into the timing chain cover when removing the rocker arm from engine front.

1. Lift the camshaft slightly.
2. Remove the twelve rocker arms.

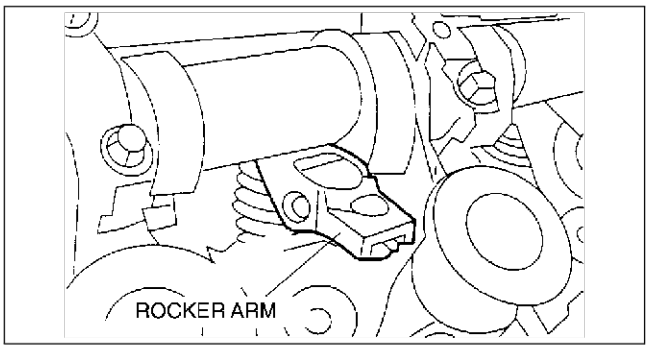

YMU110WBW

Camshaft Caps (LH) Installation Note
1. Perform Steps 1, 2, 3 and 5 in TIMING CHAIN REMOVAL/INSTALLATION, Timing Chain Component (LH) Installation Note. (See B2–15 Timing Chain Component (LH) Installation Note.)

Camshaft Caps (RH) Installation Note
1. Perform Steps 1, 2, 3 and 5 in TIMING CHAIN REMOVAL/INSTALLATION, Timing Chain Component (RH) Installation Note. (See B2–17 Timing Chain Component (RH) Installation Note.)

End Of Sie

ENGINE

ENGINE REMOVAL/INSTALLATION

AME232402000W01

1. Disconnect the negative battery cable.
2. Drain the engine coolant.
3. Drain the ATF. (See K2–75 AUTOMATIC TRANSAXLE FLUID (ATF) REPLACEMENT.)
4. Remove the plug hole plate. (See B2–7 TIMING CHAIN REMOVAL/INSTALLATION.)
5. Disconnect the P/S oil pump pipes and drain the P/S fluid reservoir.
6. Remove the splash shield (RH).
7. Remove the transvers member.
8. Remove the joint shaft (RH). (See M–7 JOINT SHAFT (AJ) REMOVAL/INSTALLATION.)
9. Disconnect the drive shaft (LH) from the transaxle. (See M–20 DRIVE SHAFT (AJ) REMOVAL/INSTALLATION.)
10. Remove the battery and battery tray.
11. Remove the air cleaner, intake air duct, accelerator cable and bracket, and vacuum hose. (See F4–60 INTAKE-AIR SYSTEM REMOVAL/INSTALLATION.)
12. Remove the ATF filter tube and selector cable. (See K2–95 AUTOMATIC TRANSAXLE REMOVAL/INSTALLATION.)
13. Remove the cruise control actuator. (See T–78 CRUISE ACTUATOR REMOVAL/INSTALLATION.)
14. Remove the radiator. (See E–13 RADIATOR REMOVAL/INSTALLATION.)
15. Remove the plastic fuel hose. (See F4–75 Plastic Fuel Hose Removal Note.) (See F4–77 Plastic Fuel Hose Installation Note.)

    Warning
    - **Fuel vapor is hazardous. It can very easily ignite, causing serious injury and damage. Always keep sparks and flames away from fuel.**
    - **Fuel line spills and leakage are dangerous. Fuel can ignite and cause serious injuries or death and damage. Fuel can also irritate skin and eyes. To prevent this, always complete the "Fuel Line Safety Procedure". (See F4–65 Fuel Line Safety Procedure.)**

16. Disconnect the PCM wiring harness (center connector) at the PCM. (See F4–90 PCM REMOVAL/INSTALLATION)

    Note
    - Do not disconnect the engine side of this harness.

17. Pull harness through the dash lower panel and into the engine compartment.
18. Remove the TWC (LH) (See F4–81 EXHAUST SYSTEM REMOVAL/INSTALLATION.)
19. Remove the front pipe. (See F4–81 EXHAUST SYSTEM REMOVAL/INSTALLATION.)
20. Remove the drive belt.
21. Remove the A/C compressor with the pipes still connected. Position the A/C compressor so that it is out of the way. Use wire or rope to secure.
22. Remove the generator and bracket. (See G–11 GENERATOR REMOVAL/INSTALLATION.)
23. Remove in the order indicated in the table.
24. Install in the reverse order of removal.
25. Start the engine and:
    (1) Inspect for the engine oil, engine coolant, transaxle oil and fuel leakage.
    (2) Verify the ignition timing, idle speed and idle mixture. (See F4–58 IGNITION TIMING INSPECTION.) (See F4–58 IDLE SPEED INSPECTION.) (See F4–58 IDLE MIXTURE INSPECTION.)
26. Perform a road test.

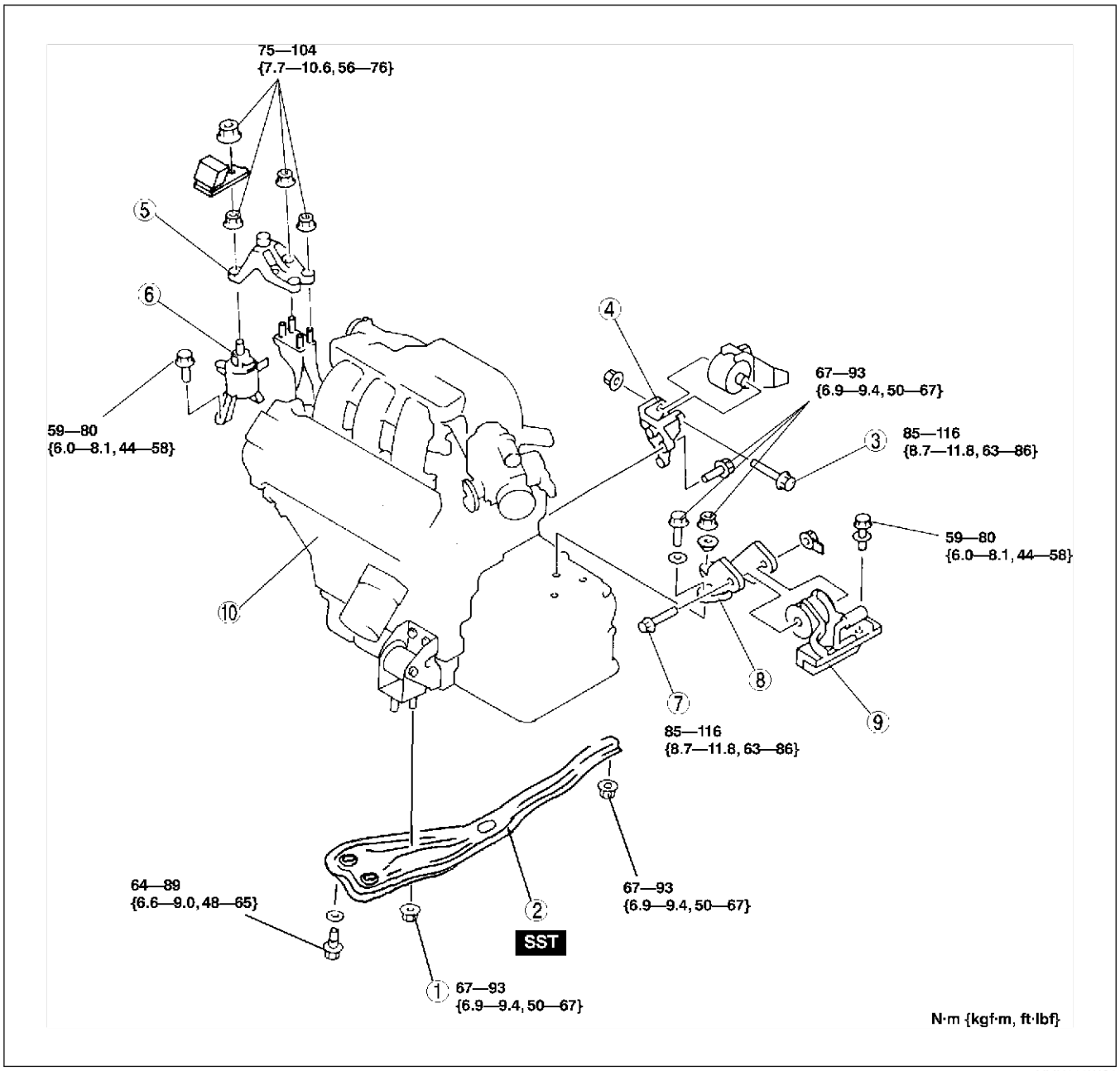

YMU110WC3

1	No.2 engine mount nut
2	Engine mount member (See B2–31 Engine Mount Member Removal Note)
3	No.1 engine mount through bolt (See B2–31 No.1 Engine Mount Through Bolt Removal Note)
4	No.1 engine joint bracket
5	No.3 engine joint bracket

6	No.3 engine mount rubber
7	No.4 engine mount through bolt
8	No.4 engine joint bracket (See B2–32 No.4 Engine Joint Bracket Installation Note)
9	No.4 engine mount rubber (See B2–32 No.4 Engine Mount Rubber Removal Note)
10	Engine, transaxle

Engine Mount Member Removal Note

1. Remove the wiper motor and link (LHD).
2. Remove the dynamic chamber (RHD).
3. Install the **SST** as shown (RHD).

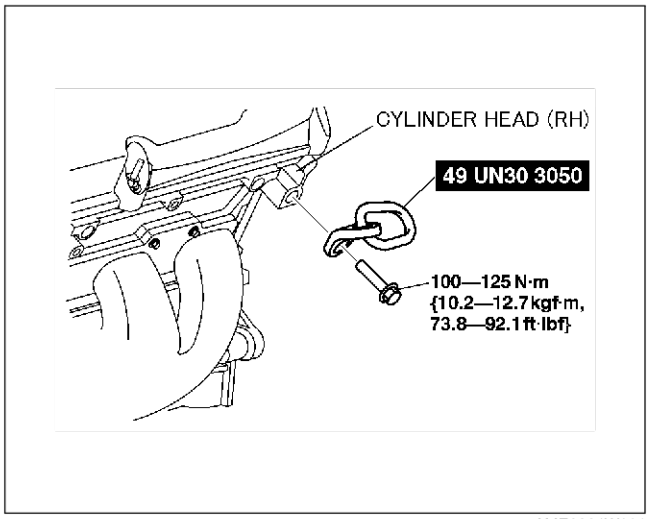

AME2324W001

4. Suspend the engine using the **SSTs**.

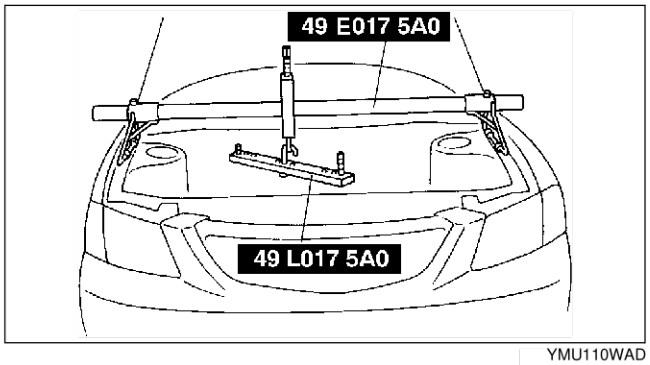

YMU110WAD

5. Remove the No.2 engine mount nut A.

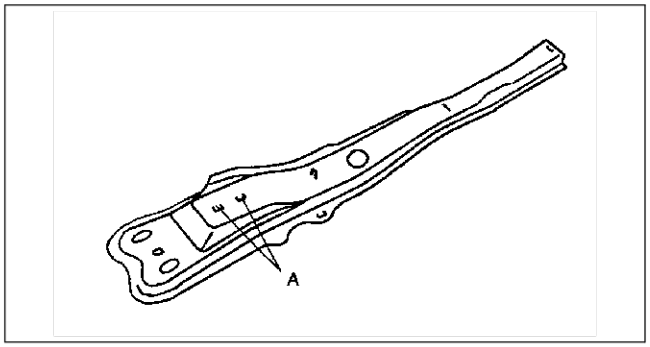

YMU110WC5

No.1 Engine Mount Through Bolt Removal Note

1. Remove the through bolt which mounts the No.1 engine mount rubber and joint bracket. Do not remove the No.1 engine mount rubber from the vehicle.
2. Before removing the No.1 engine joint bracket, set the tool under the transaxle.

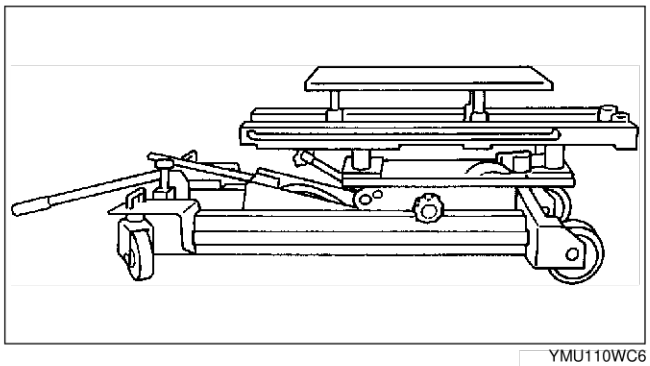

YMU110WC6

No.4 Engine Mount Rubber Removal Note

1. Loosen the No.4 engine mount rubber installation bolt, but do not remove the mount from the vehicle.
2. Remove the through bolt which mounts the mount rubber and joint bracket.

No.4 Engine Joint Bracket Installation Note

1. Tighten the nut on the center of the joint bracket first, then tighten the both side nut.

No.3 Engine Mount Nut Installation Note

1. Install all engine mounts and verify that clearances A and B of the No.3 engine joint bracket are within the specifications.
   - If not as specified, reassemble the engine mounts, according to the following procedure.

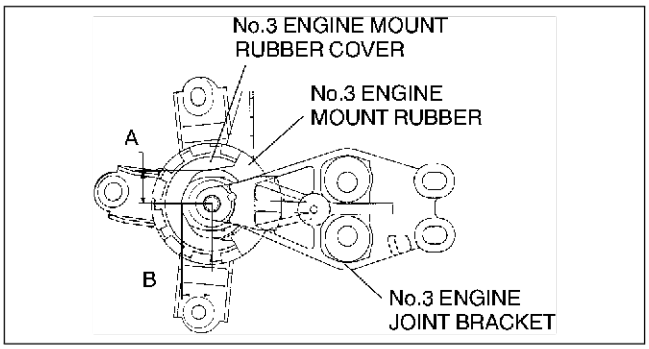

YMU110WE0

Caution

- **If the clearances A and B of the No.3 engine joint bracket are out of specifications, engine vibration and noise can increase. Make sure that the clearances are within the specifications.**

Specifications

A: 23.5—26.5 mm {0.926—1.04 in}
B: 19.5—22.5 mm {0.768—0.885 in}

(1) Remove the No.3 joint bracket. (See B2–31 Engine Mount Member Removal Note.)
(2) Loosen the No.1 and No.4 engine mount through bolts.
(3) Before tightening the No.1 and No.4 engine mount through bolts to fix the engine, position the engine so that the clearances A and B of the No.3 joint bracket are approximately within the specifications.

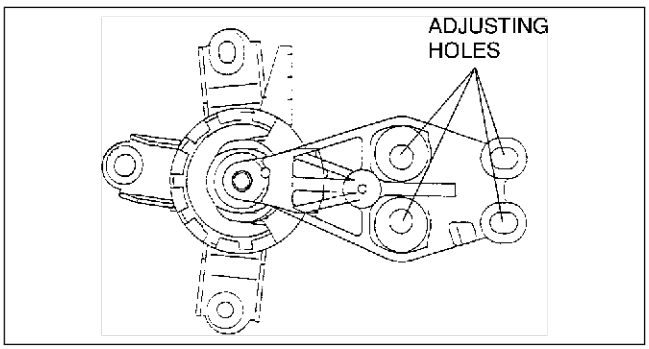

YMU110WE1

Note

- Slight displacement can be adjusted with the adjusting holes of the No.3 engine joint bracket.

(4) Tighten the No.1 and No.4 engine mount through bolts.
(5) Install the No.3 engine joint bracket so that clearances A and B are within the specifications.

End Of Sie

ENGINE [L3]

OUTLINE B3-2
OUTLINE OF CONSTRUCTION B3-2
FEATURES B3-2
ENGINE PERFORMANCE CURVE B3-3
SPECIFICATIONS B3-4
STRUCTURAL VIEW B3-4
ENGINE B3-5
CYLINDER HEAD COVER B3-5
CYLINDER HEAD B3-5
CYLINDER HEAD GASKET B3-6
CYLINDER BLOCK B3-7
CRANKSHAFT, MAIN BEARING B3-8
BALANCER UNIT B3-10
CRANKSHAFT PULLEY B3-12
ENGINE FRONT COVER B3-13
PISTON, PISTON RING, PISTON PIN B3-14
CONNECTING ROD, CONNECTING ROD BEARING B3-15
DRIVE BELT B3-16
VALVE MECHANISM B3-17
VALVE MECHANISM B3-17
CAMSHAFT B3-17
CAMSHAFT SPROCKET B3-19
CRANKSHAFT SPROCKET B3-20
TIMING CHAIN, CHAIN TENSIONER B3-21
VALVE, VALVE SPRING, VALVE SEAL, VALVE GUIDE B3-22
TAPPET B3-23
LOCATION INDEX B3-24
LOCATION INDEX B3-24
DRIVE BELT B3-25
DRIVE BELT INSPECTION B3-25
DRIVE BELT REPLACEMENT B3-25
DRIVE BELT AUTO TENSIONER INSPECTION B3-26
VALVE CLEARANCE B3-26
VALVE CLEARANCE INSPECTION B3-26
VALVE CLEARANCE ADJUSTMENT B3-27
COMPRESSION PRESSURE B3-31
COMPRESSION INSPECTION B3-31
TIMING CHAIN B3-32
TIMING CHAIN REMOVAL/INSTALLATION B3-32
CYLINDER HEAD GASKET B3-39
CYLINDER HEAD GASKET REPLACEMENT B3-39
FRONT OIL SEAL B3-42
FRONT OIL SEAL REPLACEMENT B3-42
REAR OIL SEAL B3-45
REAR OIL SEAL REPLACEMENT B3-45
ENGINE B3-46
ENGINE REMOVAL/INSTALLATION B3-46
ENGINE DISASSEMBLY/ASSEMBLY B3-51

OUTLINE

OUTLINE OF CONSTRUCTION

AME240202000W01

- The new MPV L3 engine (2.3L) model has been adopted for European specs.

End Of Sta

FEATURES

AME240202000W02

Reduced engine weight

- Main parts (cylinder head and cylinder block) are made of aluminium alloy.

Reduced engine noise and vibration

- The cylinder head is made of aluminium alloy.
- The cassette type balancer unit has been adopted.
- Silent timing chain has been adopted.
- A deep skirt type and forms the ladder frame structure with the integrated main bearing cap has been adopted for the cylinder block.
- The crankshaft pulley with torsional damper has been adopted.

Improved serviceability

- The drive belt of serpentine type has been adopted.
- Tension of the drive belt is adjusted automatically with an auto-tensioner.
- Timing chain has been adopted to eliminate the need for its replacement.
- The engine front cover with service hole has been adopted. (for unlocking the chain adjust ratchet, and securing the tensioner arm).

End Of Sta

ENGINE PERFORMANCE CURVE

AME240202000W03

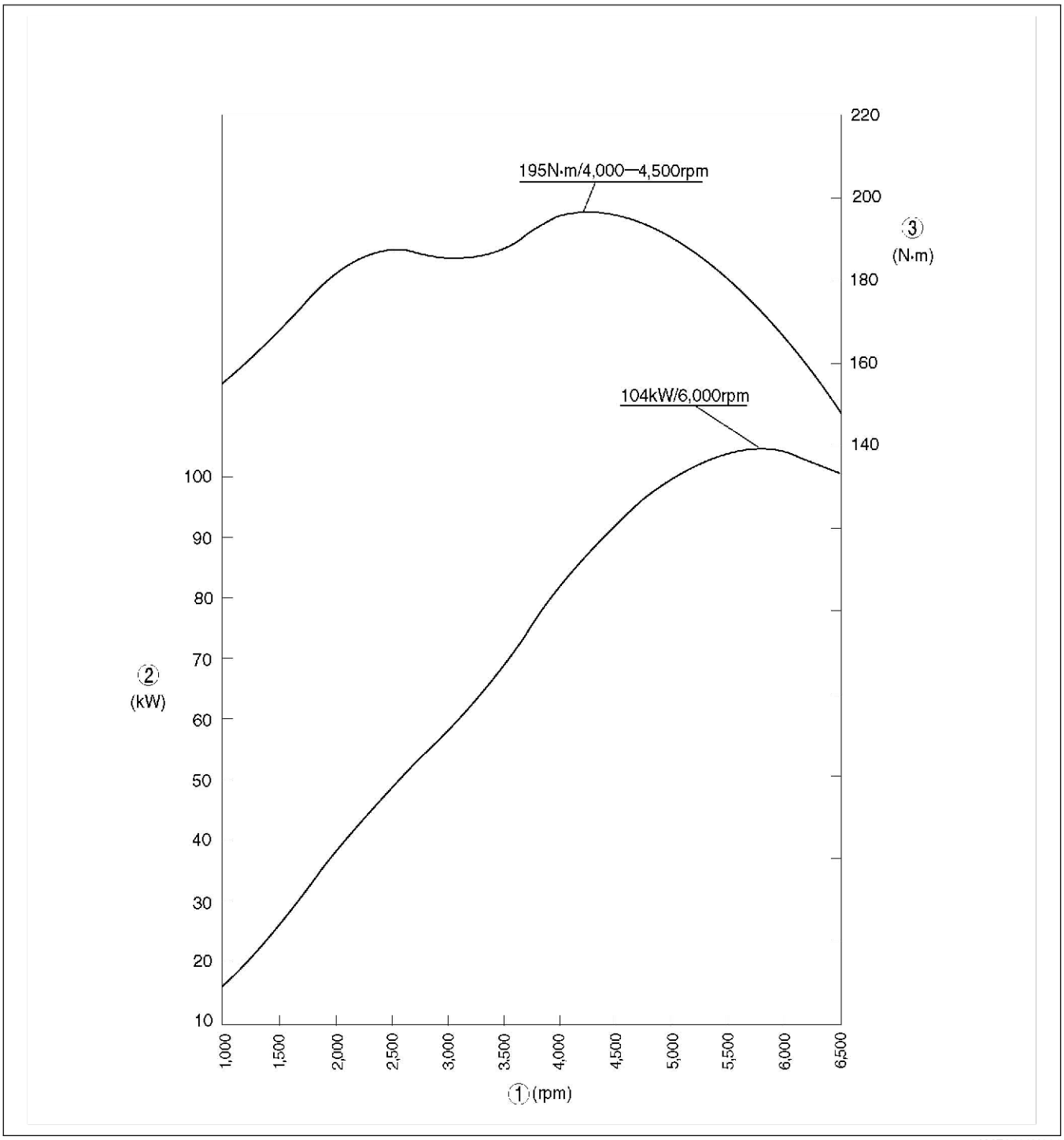

AME2406N001

1	Engine speed
2	Output

3	Torque

End Of Sta

SPECIFICATIONS

AME240202000W04

Item				Engine
				L3
Type				Gasoline, 4-cycle
Cylinder arrangement and number				In-line, 4-cylinder
Combustion chamber				Pentroof
Valve system				DOHC, timing chain driven, 16-valve
Displacement (ml {cc, cu in})				2,261 {2,261, 137.9}
Bore × stroke (mm {in})				87.5 × 94.0 {3.44 × 3.70}
Compression ratio				9.7:1
Compression pressure (kPa {kgf/cm^2, psi} [rpm])				1,530 {15.6, 221.8} [300]
Valve timing	IN	Open	BTDC (°)	4
		Close	ABDC (°)	52
	EX	Open	BBDC (°)	37
		Close	ATDC (°)	4
Valve clearance (mm {in})		IN		0.22 {0.0087}— 0.28 {0.011} [Engine cold]
		EX		0.27 {0.011}— 0.33 {0.012} [Engine cold]

End Of Sie

STRUCTURAL VIEW

AME240202000W05

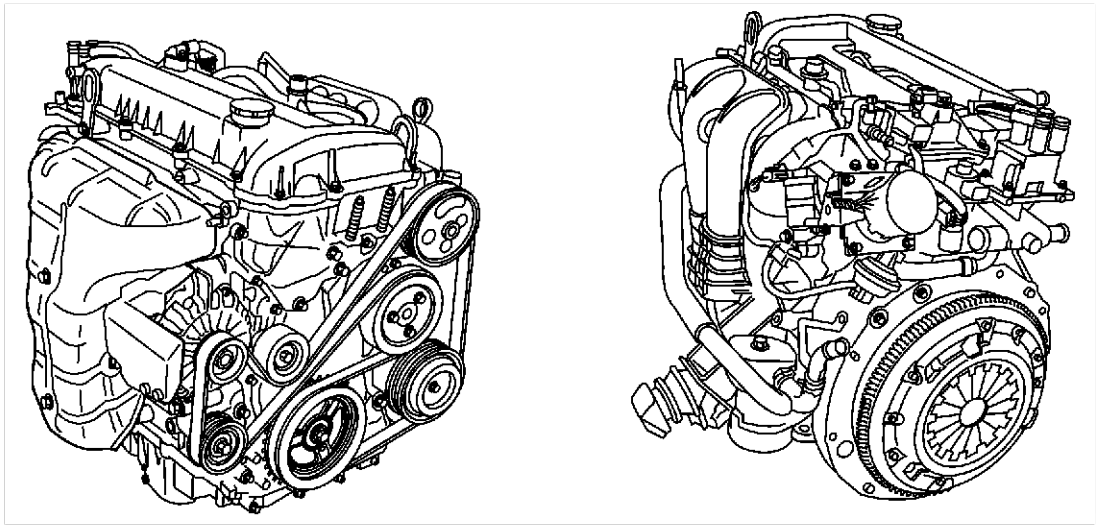

AME2202N102

ENGINE

CYLINDER HEAD COVER

AME242410100W01

Structure

- The cylinder head cover is made of integrated aluminium alloy, which is lightweight and sound absorbent.
- The oil filler cap is a screw-in type. The boss for installing the camshaft position (CMP) sensor is provided at the rear of the cylinder head cover.

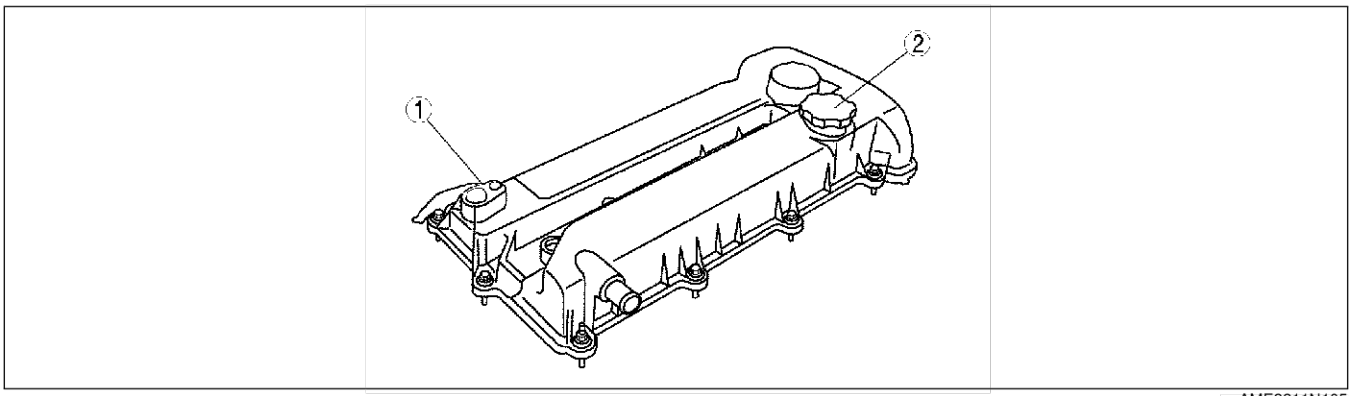

AME2211N105

1	Camshaft position (CMP) sensor
2	Oil filler cap

CYLINDER HEAD

AME242410100W02

Structure

- The cylinder head is made of a high heat conductive, lightweight aluminum alloy, which is quenched.
- Compact, pentroof-type combustion chambers have been adopted. The spark plugs are mounted at the top of the combustion chambers to improve combustion efficiency.
- The intake/exhaust port layout is a cross flow type, (the angle between two valves is 39°, the two intake valves and the two exhaust valves per cylinder) which improves air intake/exhaust efficiency.
- The cylinder head bolts are plastic region tightening bolts to be tightened in five motions to insure tightening stability.

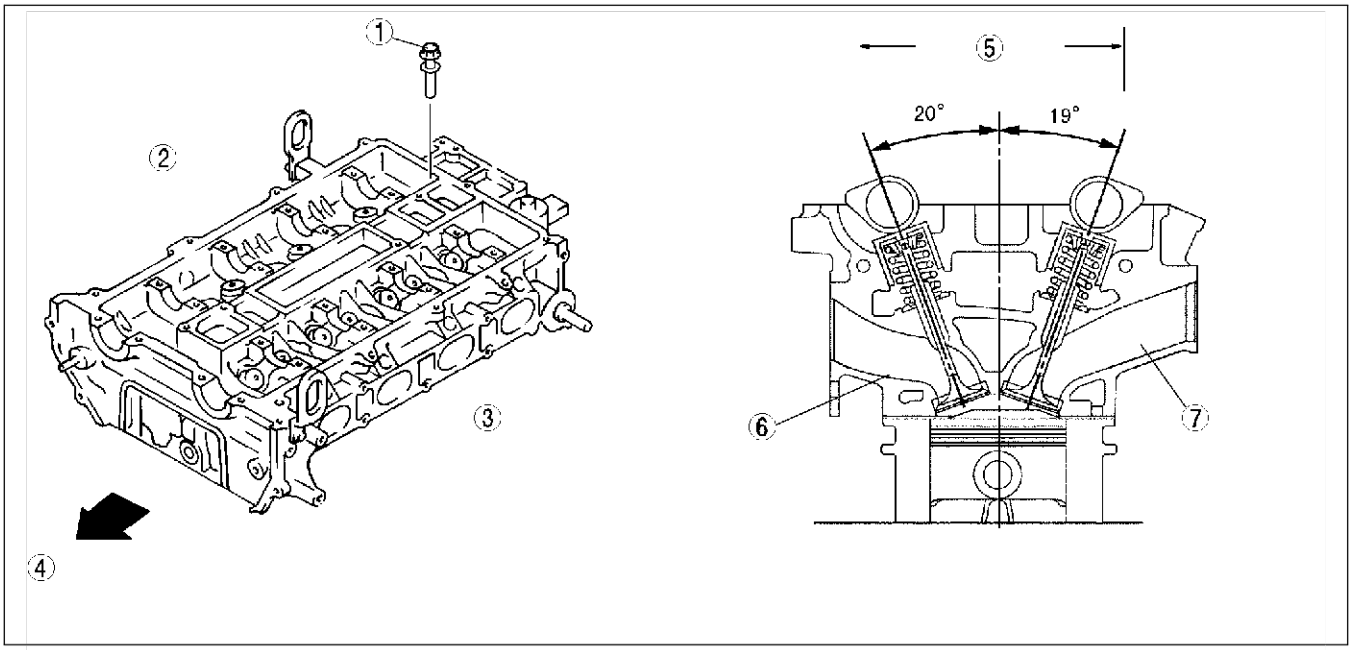

AME2224N002

1	Cylinder head bolt
2	Exhaust side
3	Intake side
4	Engine front side

5	The angle between two valves
6	Intake port
7	Exhaust port

CYLINDER HEAD GASKET

AME242410271W01

Structue

- Cylinder head gaskets are 2 layer-metal gaskets.

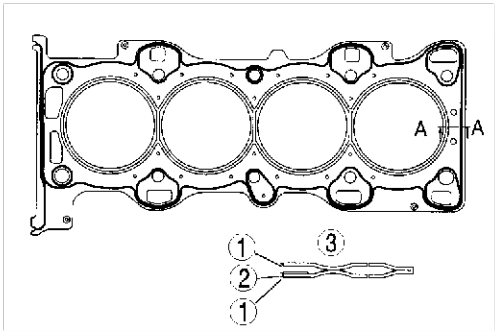

AME2224N400

1	Beat plate
2	Shim

3	A-A sectional view

CYLINDER BLOCK

AME242410300W01

Structure

- The cylinder block is made of aluminum alloy, which is cast with the cast iron liner, improving heat radiation and decreasing weight.
- The cylinder block is a deep skirt type and forms the ladder frame structure with the integrated main bearing cap. The water jacket of the cylinder block is a closed deck type. Its higher rigidity reduces vibration and noise.
- The cylinder block has the oil separator cover on the opposite side of the fresh air intake, the PCV (positive crankcase ventilation) valve and the oil separator function with an part for installing the PCV valve, to improve blow-by gas ventilation efficiency.
- There is no positioning tab where the upper main journal and the lower main bearing are installed.
- The main bearing cap bolts are plastic region tightening bolts to be tightened in two steps to insure tightening stability.

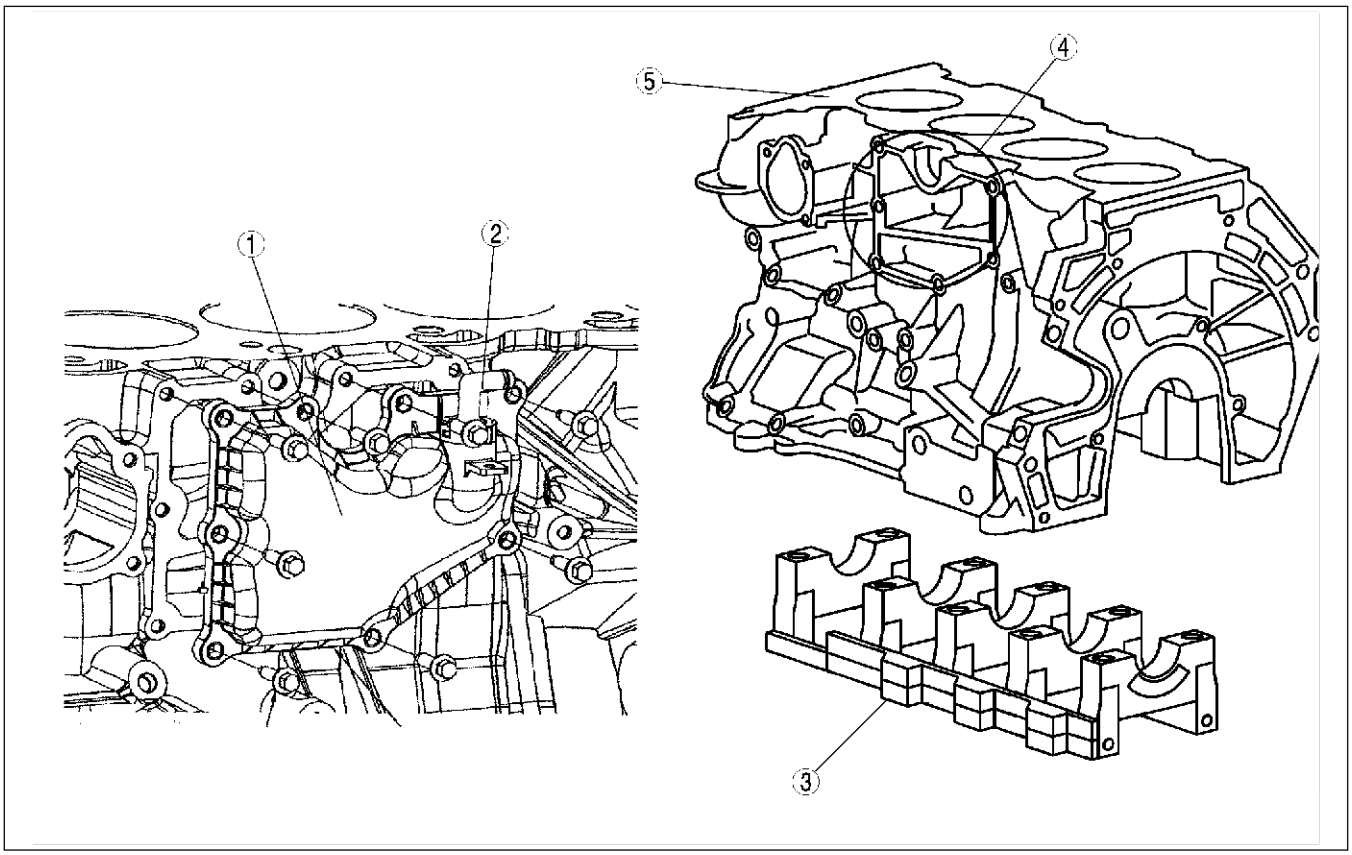

AME2224N003

1	Oil separator cover
2	PCV valve
3	Main bearing cap

4	Oil separator cover attachment part
5	Cylinder block

- The service hole for installing the **SST**, which is used for detect No.1 cylinder's TDC position, is located at the right side of the cylinder block. The TDC position can be detected when the **SST** edge touches the cutting surface of No.1 counter weight.

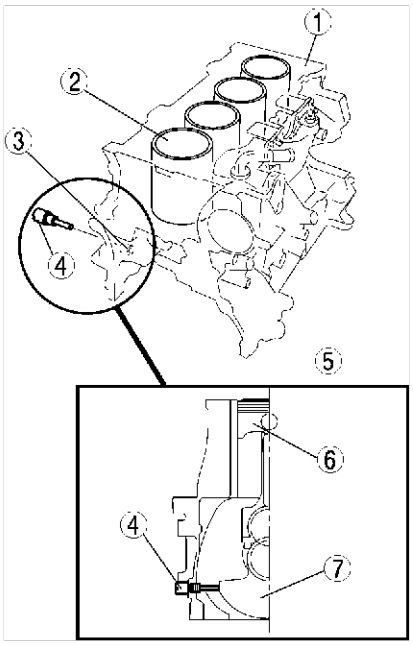

AME2224N004

1	Cylinder block
2	No.1 cylinder
3	Service hole
4	**SST**

5	No.1 cylinder TDC position
6	No.1 piston
7	Crankshaft counter weight

End Of Sec

CRANKSHAFT, MAIN BEARING

AME242411301W01

Structure

- A Five axle-hole, 8 counter weight cast iron crankshaft has been adopted. The shrinkage fitted drive gear is attached to the crankshaft and the crankshaft drives the balance shaft.
- There is no positioning key where the crankshaft sprocket and crankshaft pulley are installed. The crankshaft sprocket is to be installed using the **SST** with No.1 cylinder aligned with TDC position. Tightening pressure on the tightening bolt is used to secure the crankshaft sprocket and crankshaft pulley.

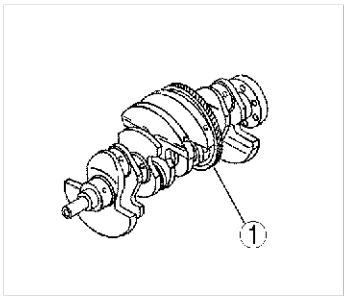

AME2224N005

1	Drive gear

- An oil line for supplying oil to each journal is provided in the crankshaft. Crank pins and fillets on both sides of the journal are rolled to bear heavy loads.

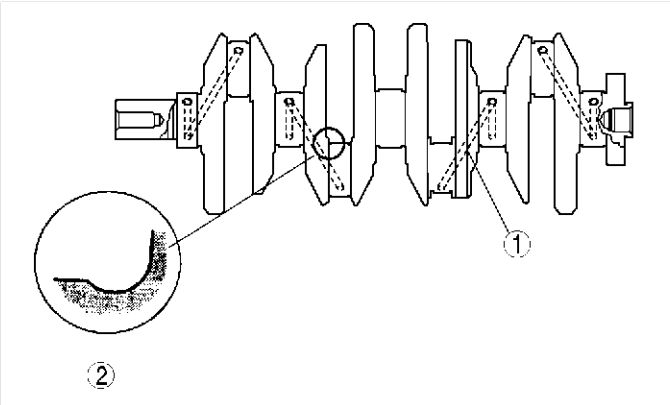

AME2224N006

1	Oil passage	2	Fillet roll area

- Upper and lower main bearings are made of aluminium alloy and upper side No.3 journal bearing is integrated with the thrust bearing. The upper main bearing has oil grooves and oil holes.
- There is no upper and lower bearings' positioning tab for installing the main journal.
- Measure and attach the main bearings (upper and lower) so that they are positioned at the center the main bearing cap.

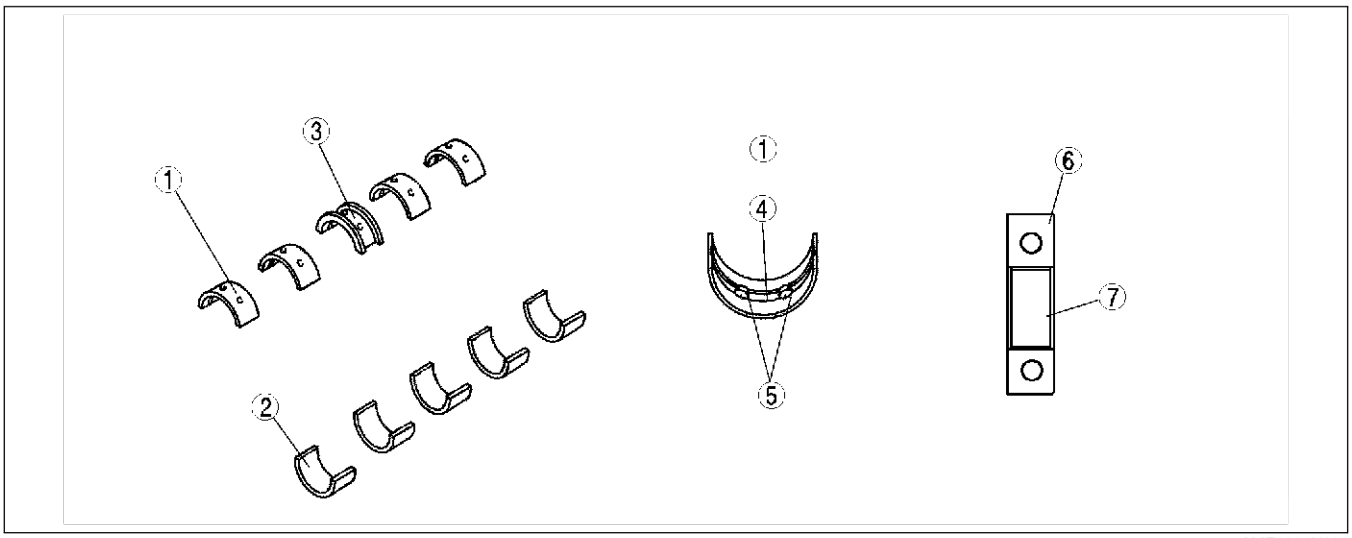

AME2224N007

1	Upper main bearing	5	2 holes Supplying engine oil
2	Lower main bearing	6	Main bearing cap
3	Thrust bearing	7	Main bearing
4	Supplying engine oil		

- Three kinds of main bearings are available depending on the oil clearance.

Bearing size	Color	Bearing thickness (mm {in})
Standard	Green	2.506—2.509 {0.0987—0.0988}
0.25 {0.01} Oversize		2.628—2.634 {0.1035—0.1037}
0.50 {0.02} Oversize		2.753—2.759 {0.1084—0.1086}

End Of Sie

BALANCER UNIT

AME242411301W02

Outline

- The cassette type balancer, which is separated from the engine, has been adopted to reduce vibration from the engine.

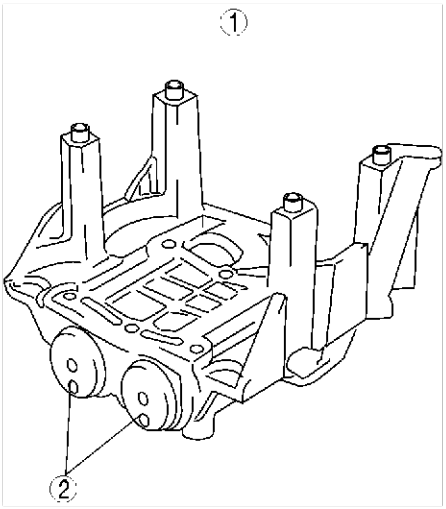

AME2224N401

1	Cassette type balancer unit	2	balance shaft

Structure

- The balancer unit consists of two balancer shafts (No.1 and No.2) with weights, the balancer unit case and the adjust shim which adjusts the amount of backlash in the crankshaft.
- The two balancer shafts (No.1 and No.2) are driven by the drive gear which is attached to the crankshaft.
- The balancer unit cannot be disassembled because it is a precision unit.

Operation

- The rotary motion is transmitted from the drive gear, which is between the back of No.3 cylinder and No.4 main journal, directly to No.1 balance shaft with driven gear. Then the balance unit transmits the rotation motion to No.2 balance shaft. The ratio of gears, which are attached to No.1 and No. 2 balancer shafts, has been set so that the gear rotates at twice the velocity of the crankshaft. The balancer shaft's rotation velocity counterbalances (generate the force in the opposite direction) the rotation inertial force (secondary inertial rotation force) from the crankshaft.

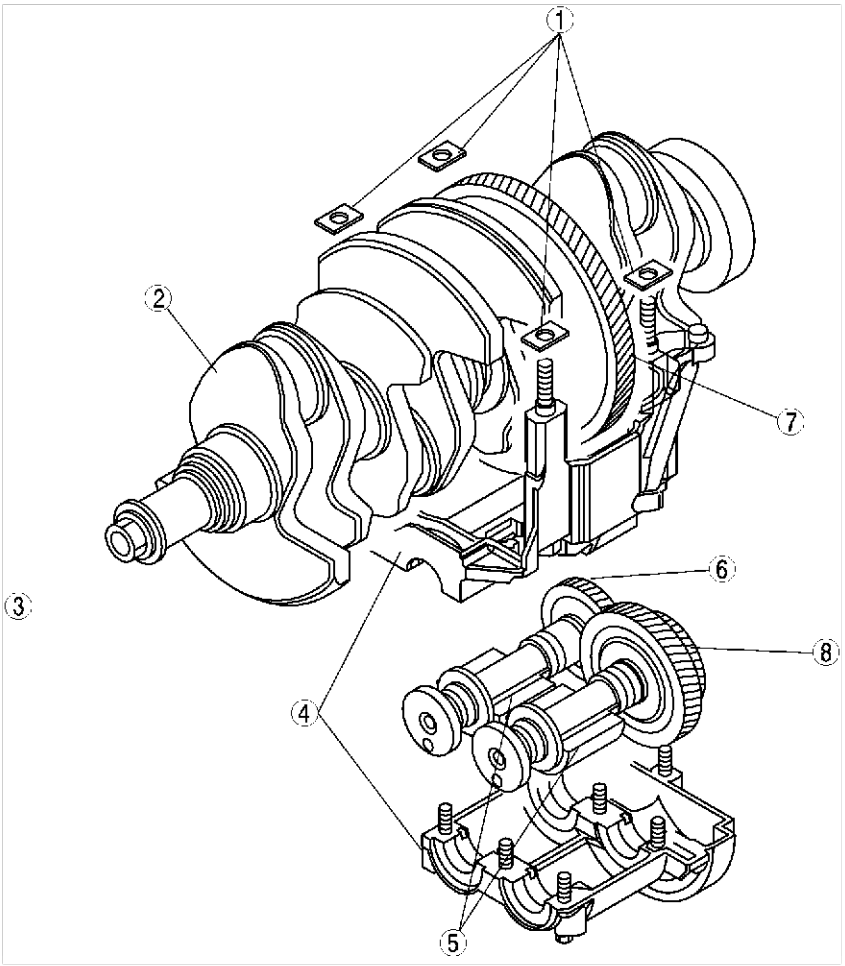

AME2224N402

1	Adjust shim	5	Weights
2	Crankshaft	6	No.2 balance shaft
3	Engine front	7	Drive gear
4	Balancer unit case	8	No.1 balance shaft with driven gear

- Replace the adjust shim to adjust backlash. There are 40 kinds of adjuster shim depending on the thickness. The adjuster shim can be determined by checking the engraved identification mark (2 digits) on it.

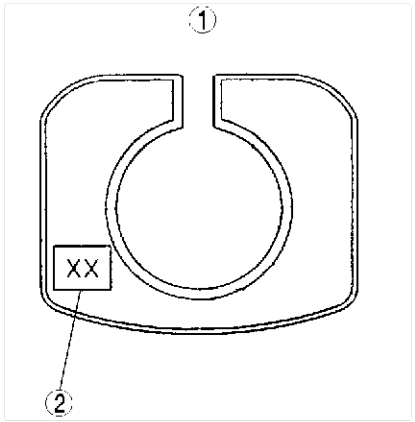

AME2224N403

1	Cylinder block	2	Engraved identification mark (2 digits)

CRANKSHAFT PULLEY

AME242411371W01

Structure

- The crankshaft position (CKP) signal detecting blade has been adopted for the crankshaft pulley. The torsional damper, which prevents the crankshaft from wobbling, has also been adopted for the crankshaft.
- There is no positioning key slot on the crankshaft pulley. Instead, the positioning hole on the crankshaft pulley and the engine front cover are used for aligning the crankshaft pulley with the crankshaft.
- Crankshaft pulley rock bolts are plastic region tightening bolts to be tightened in two steps to insure tightening stability.

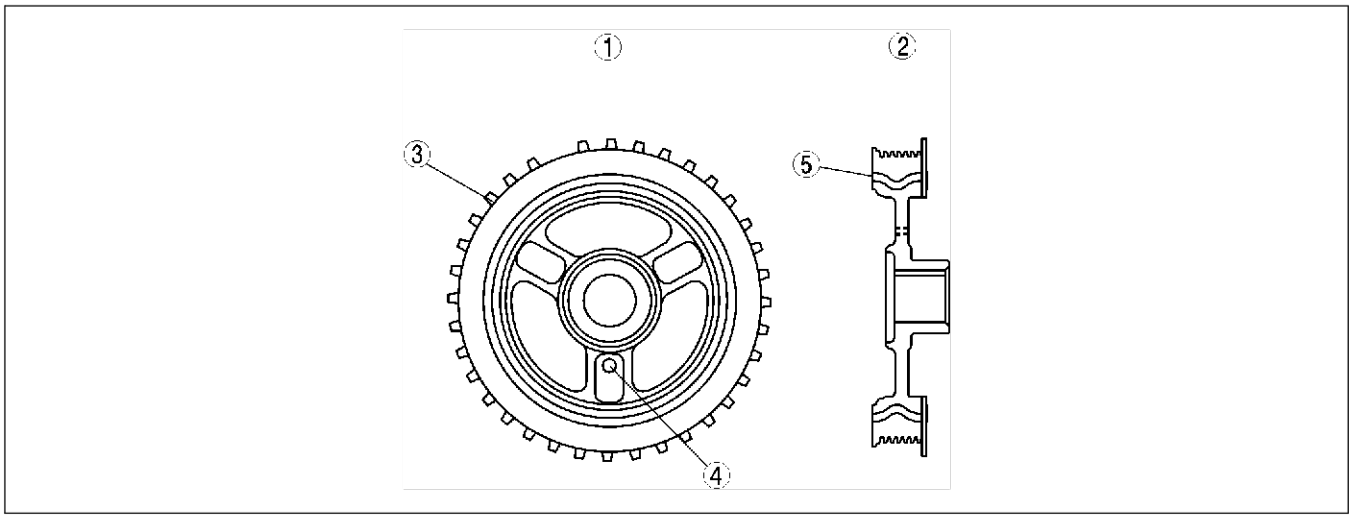

AME2224N012

1	Elevation view
2	Sectional view
3	Braid for CKP sensor signal detection

4	Hole for pulley positioning
5	Torsional damper

ENGINE FRONT COVER

AME242401001W03

Structure

- The engine front cover is made of aluminium alloy, and is integrated with No.3 engine-mounting bracket, to improve noise absorption and weight reduction.
- The bolt hole for crankshaft pulley positioning, the service hole for unlocking the chain adjuster ratchet, and the service hole for securing the tensioner arm when loosening the timing chain, are on the engine front cover.

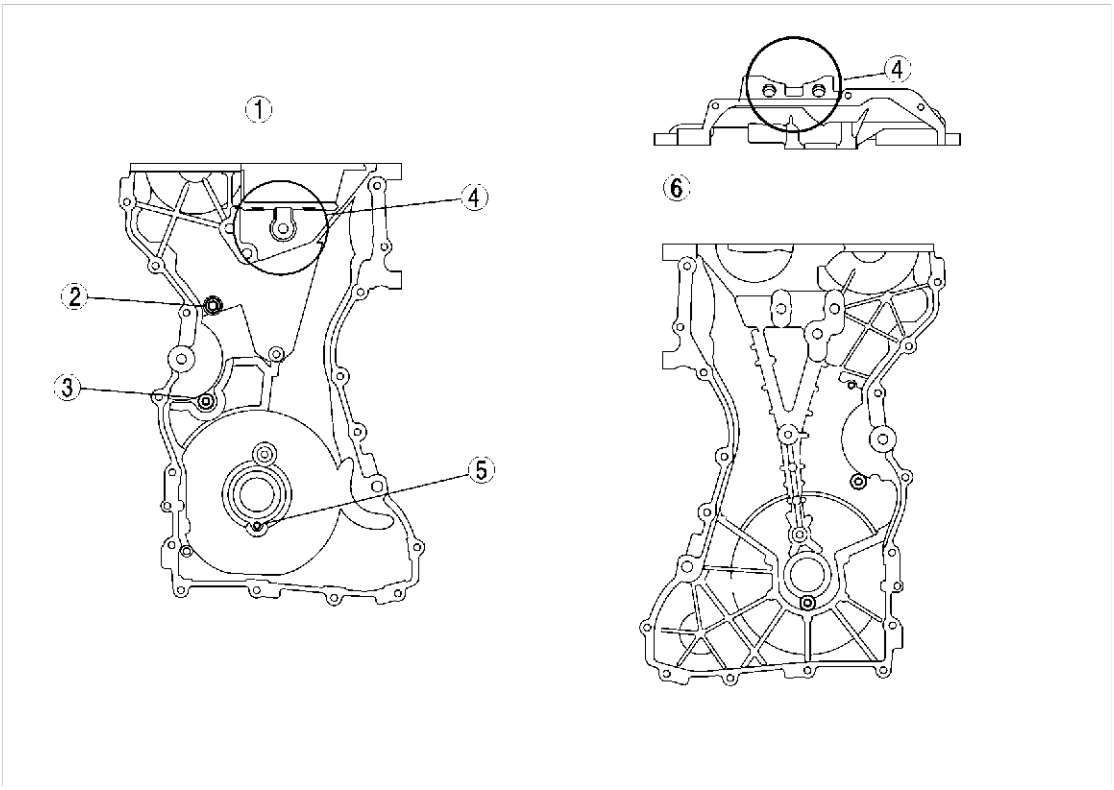

AME2224N011

1	Elevational view
2	Service hole for tensioner arm fixation
3	Service hole for chain tensioner lock release

4	No.3 engine mount bracket
5	Bolt hole crankshaft pulley positioning
6	Back view

PISTON, PISTON RING, PISTON PIN

AME242411010W01

Structure

- The pistons are made of aluminium alloy, which with stands heat and is highly conductive.
- The piston skirt is coated with graphite to reduce friction.
- The offset pistons are used to reduce piston-slapping noise.
- To prevent the piston from being reassembled in the wrong direction, the front mark (←) is on the piston.
- Pistons and connecting rods cannot be disassembled because they are shrinkage fit.

Piston Specification.

ITEM		L3
Outer diameter	mm {in}	87.465—87.495 {3.4435—3.4446}
Offset quantity	mm {in}	0.8 {0.032}
Compression height: HC	mm {in}	28.5 {1.122}
Piston height: HD	mm {in}	51.0 {2.0078}

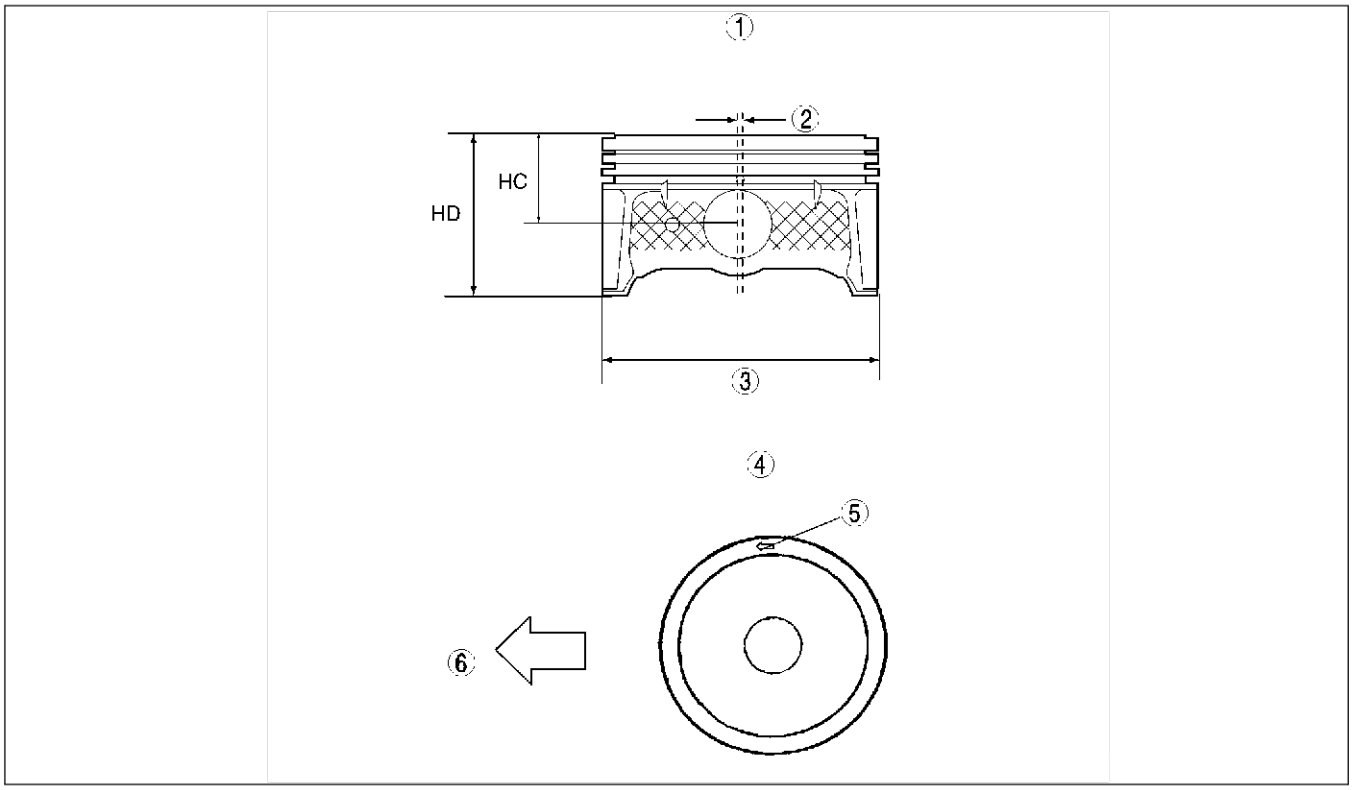

AME2224N008

1	Piston side view
2	Offset
3	Outer diameter

4	Piston upper view
5	Install arrow facing engine front
6	Engine front side

- The following piston rings have been adopted: Barrel face ring for top ring, taper under cut ring for second ring, two scuff rings and an expander for oil ring.
- The piston pin is made of chrome steel alloy, which has superior rigidity.
- The connecting rod and the piston pin are shrinkage fit, so that it cannot be disassembled.

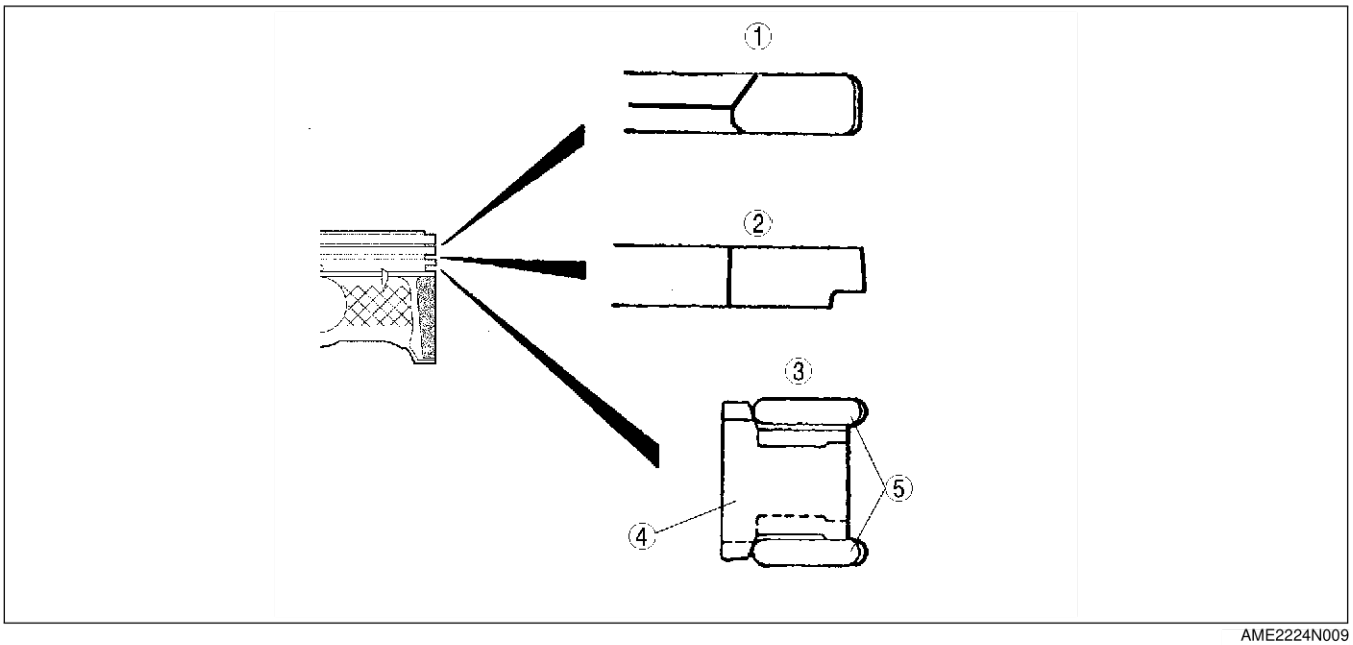

AME2224N009

1	Top ring sectional view
2	Second ring sectional view
3	Oil ring sectional view

4	Side rail
5	Expander

End Of Sre

CONNECTING ROD, CONNECTING ROD BEARING

AME242411211W01

Structure

- Connecting rod is made of structural sintered alloy to improve rigidity.
- The connecting rod, the piston, and the piston pin are shrinkage fit, so that they cannot be disassembled.
- The connecting rod bolts are plastic region tightening bolts, to be tightened in two steps to insure tightening stability.
- There shall be no positioning tab for the connecting rod bearing. When installing the bearing, measure the position of the bearing so that the position gets to the center of the connecting rod and the bearing cap, and install it.
- The big end of the connecting rod and the connecting rod cap were originally formed as a single unit and then it was cut into the connecting rod and the cap. The form of the cutting surface is used for the alignment mark for the connecting rod and the cap.

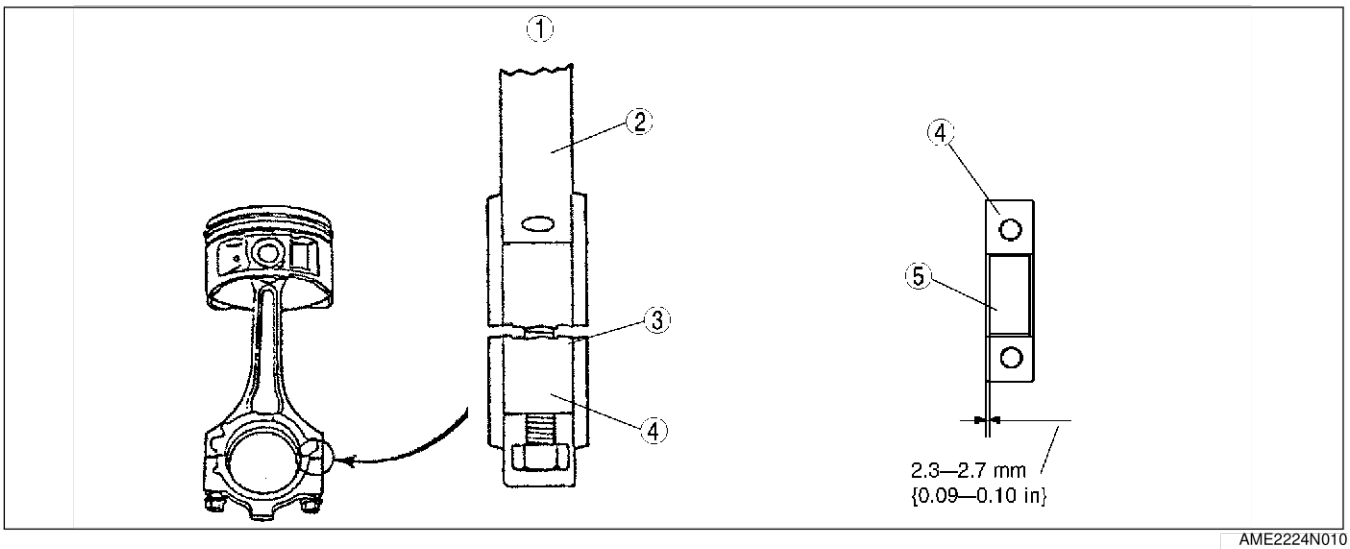

AME2224N010

1	Enlargement
2	Connecting rod
3	Fracture side

4	Connecting rod bearing cap
5	Connecting rod bearing

- The upper lower bearing of the connecting rod bearing is made of aluminium alloy.
- There are three kinds of connecting rod bearings depending on the oil clearance.

Bearing size	Color	Bearing thickness (mm {in})
Standard	Green	1.496—1.502 {0.0589—0.0591}
0.50 {0.02} Oversize	1.748—1.754 {0.0688—0.0690}	
0.25 {0.01} Oversize	1.623—1.629 {0.0639—0.0641}	

End Of Sec

DRIVE BELT

AME242415800W01

Structure

- A serpentine type drive belt with a V-ribbed belt to drive the supplemental units has been adopted. This shortens the engine length and improve serviceability.
- A front drive belt auto tensioner with an embedded coil spring has been adopted to automatically maintain the optimal drive belt tension.

Drive Belt Specification.

ITEM		L3
Belt length size	mm {in}	About 2,305 {90.75}
Belt width size	mm {in}	About 20.5 {0.81}

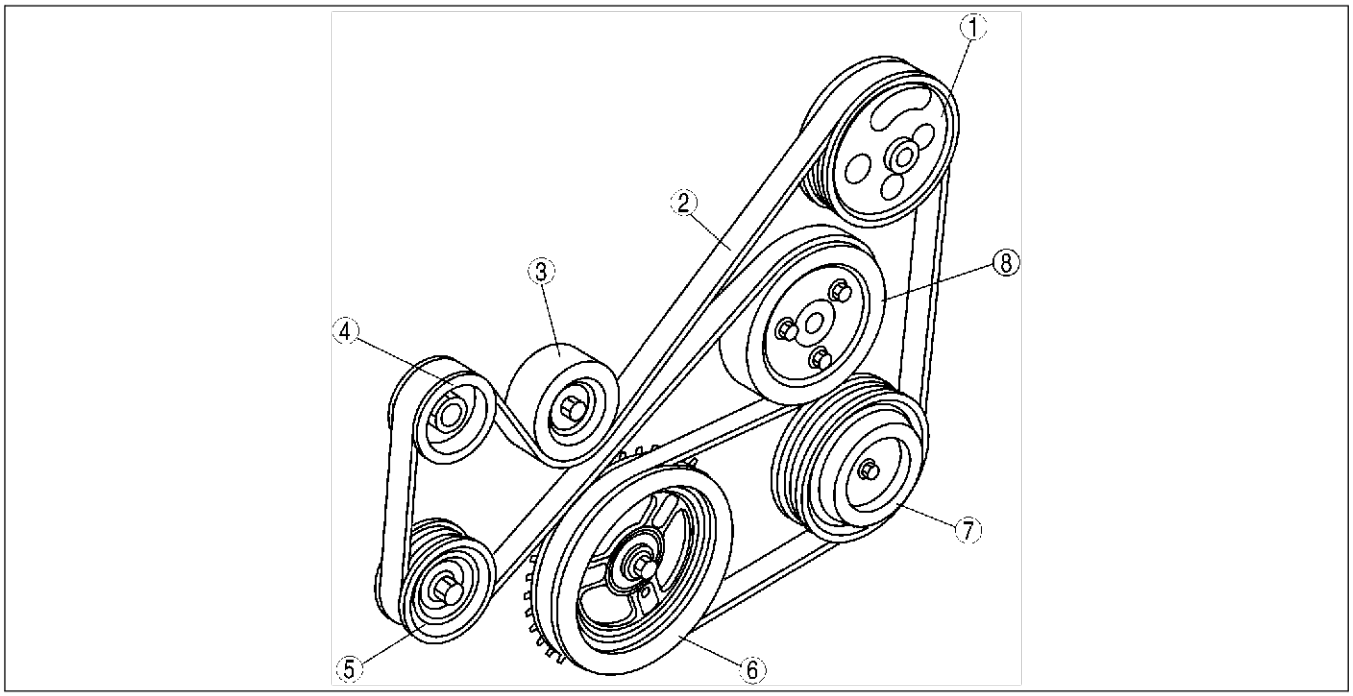

AME2224N013

1	P/S oil pump pulley
2	Drive belt
3	Idler pulley
4	Generator pulley

5	Front drive belt auto tensioner
6	Crankshaft pulley
7	A/C compressor pulley
8	Water pump pulley

VALVE MECHANISM

VALVE MECHANISM

AME241112111W01

Outline

- There are two intake ports and two exhaust ports each cylinder. Totally 16 valves are directly driven by two camshafts.

Structural view

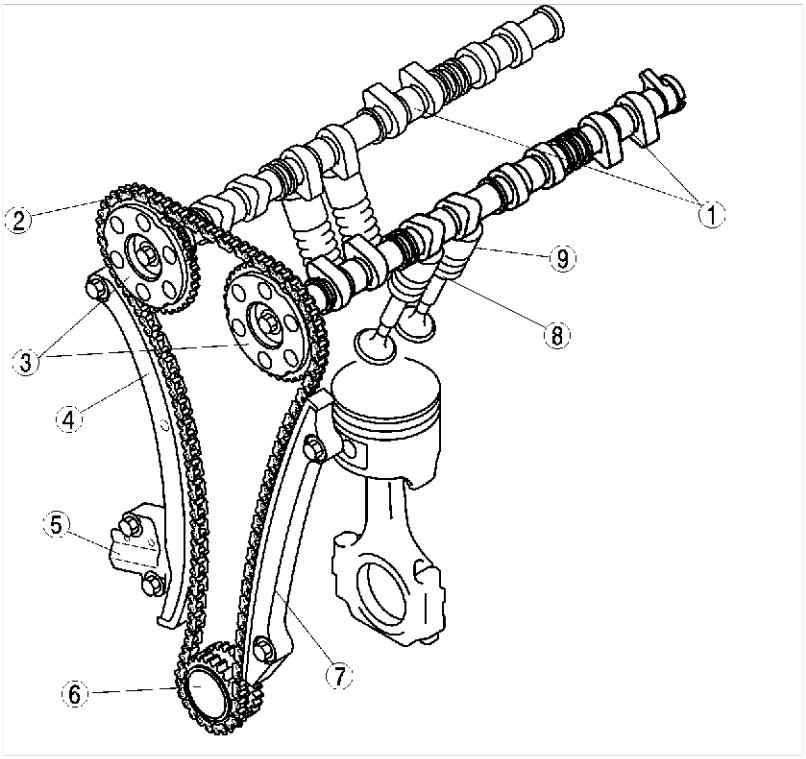

AME2211N001

1	Camshaft
2	Timing chain
3	Camshaft sprocket
4	Tensioner arm
5	Chain tensioner

6	Crankshaft sprocket
7	Chain guide
8	Valve assembly
9	Tappet

End Of Sub

CAMSHAFT

AME241112420W01

Structure

- The cast iron 5 axis-hole, which has great rigidity, has been adopted for the camshaft to insure higher reliability.
- The endplay of the camshaft is regulated at the rear of No. 1 journal.
- The lubricating oil is supplied through the oil supply hole at each journal. Additionally the cam nose part is chill casted to improve the abrasion resistance and the width of cam hill part is shortened to reduce the weight.
- There shall be no positioning pin or key slot for the camshaft sprocket at the edge of the camshaft. The lubrication process has been adopted for the camshaft sprocket tightening bolt to prevent instability in the axis during tightening.

Camshaft Specification.

ITEM		IN	EX
LIFT	(mm{in})	8.8 {0.34}	7.7 {0.30}
Overlap	(°)	8	

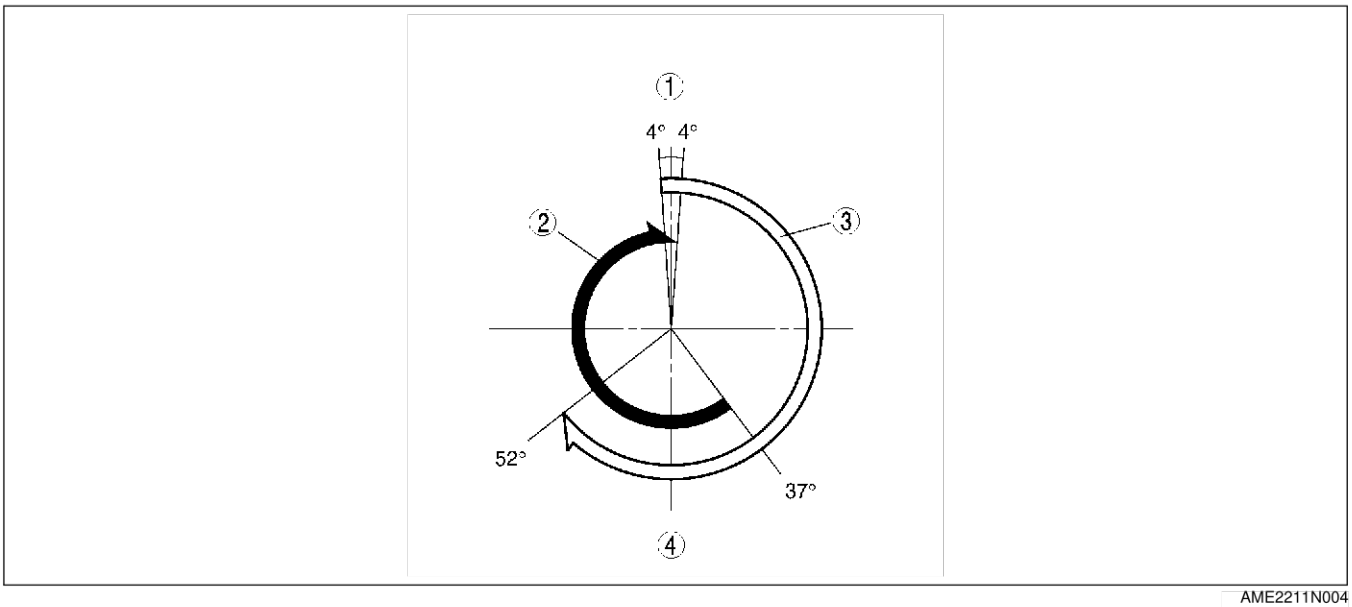

AME2211N004

1	TDC
2	EX

3	IN
4	BDC

- The detection unit or the camshaft position (CMP) sensor, which is integrated with the camshaft, is at the intake port side camshaft.
- The groove for securing No.1 cylinder TDC for the camshaft, is provided at the rear of the intake and exhaust camshaft.

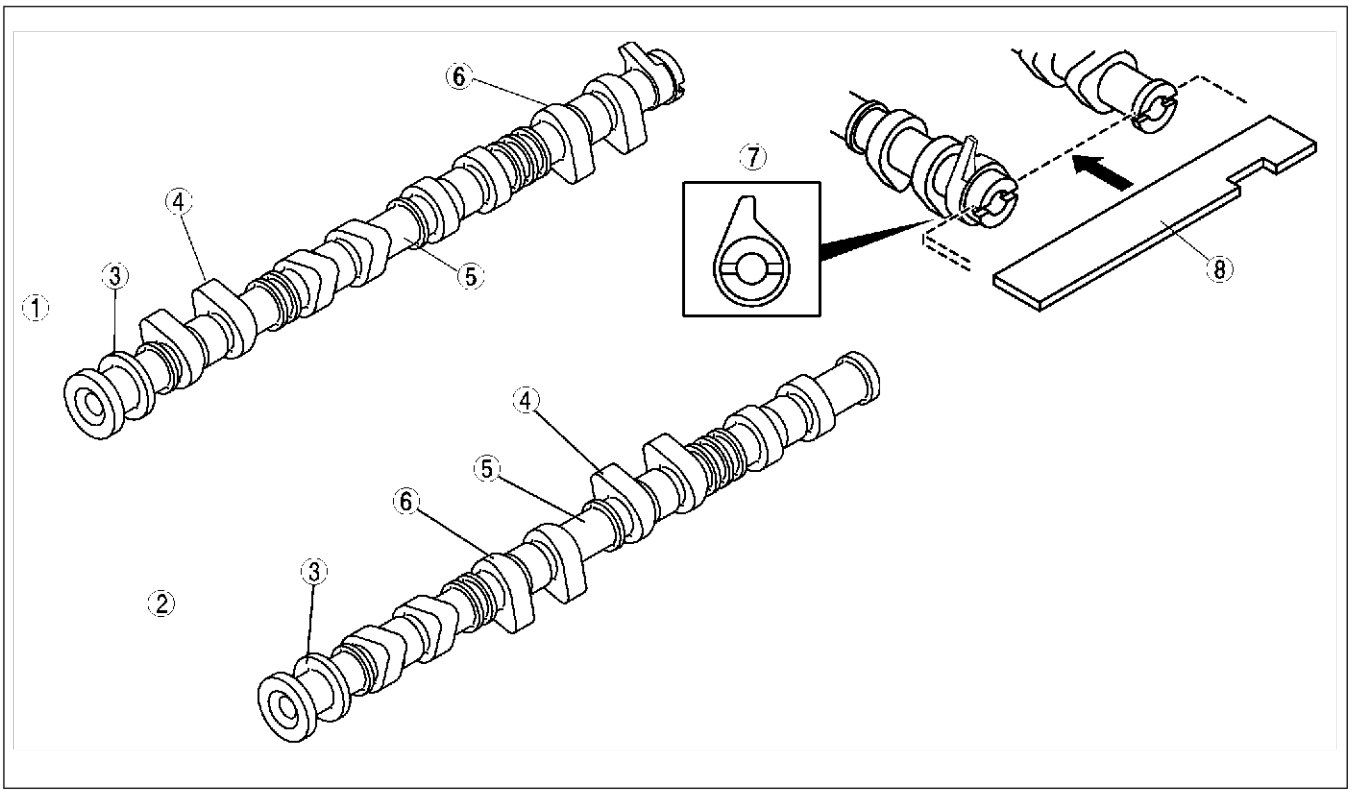

AME2211N005

1	Intake camshaft
2	Exhaust camshaft
3	Thrust
4	Cam nose

5	Cam journal
6	Cam heel
7	Detection part for CKP sensors
8	**SST**

End Of Site

CAMSHAFT SPROCKET

AME241112420W02

Structure

- The sintered alloy, which has high rigidity, has been adopted for the camshaft sprocket and is quenched to improve the abrasion resistance at the contact point with the timing chain.

1	Camshaft sprocket

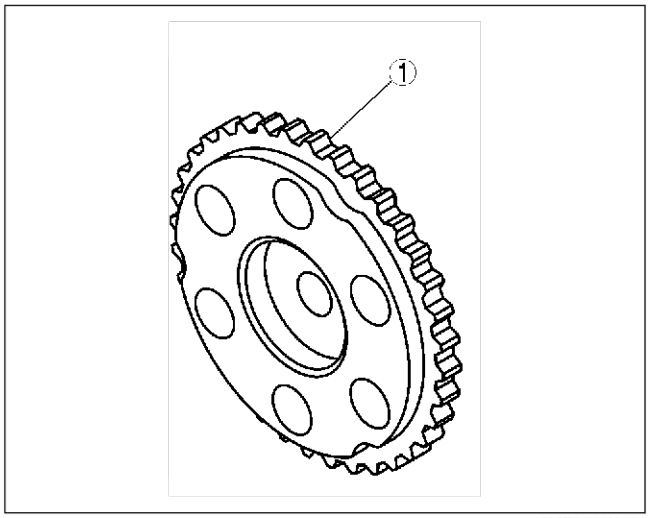

AME2211N009

End Of Site

CRANKSHAFT SPROCKET

AME241112420W03

Structure

- High-strength chromium steel has been adopted for the crankshaft sprocket. Due to carburizing protection, abrasion resistance at all chain contact points is increased.
- The crankshaft sprocket consists of the timing chain sprocket and oil pump sprocket, which are integrated into a single unit.
- The keyway on the crankshaft sprocket, used to position the crankshaft during installation, has been eliminated.

Timing Drive Sprocket Specification.

ITEM	L3
Outer diameter (mm {in})	About 48.495 {1.9093}
Tooth width (mm {in})	About 8.03 {0.316}

Oil Pump Drive Sprocket Specification.

ITEM	L3
Outer diameter (mm {in})	About 48.495 {1.9093}
Tooth width (mm {in})	About 5.93 {0.242}

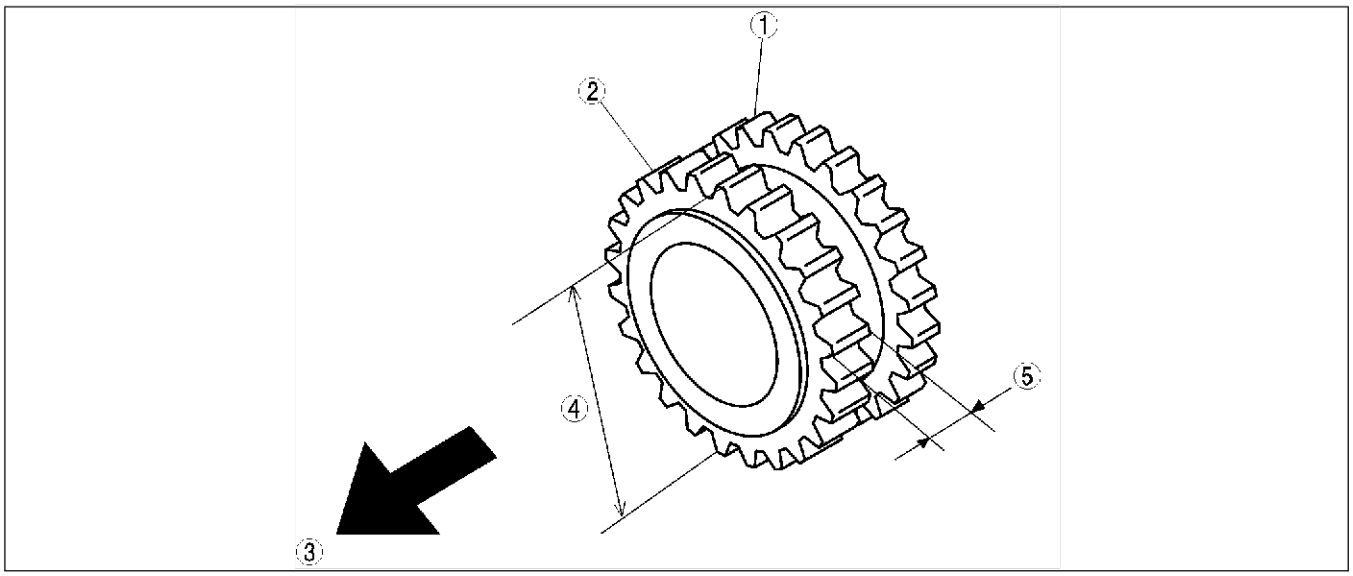

AME2211N010

1	Oil pump drive sprocket
2	Timing chain drive sprocket
3	Engine front

4	Outer diameter
5	Tooth width

TIMING CHAIN, CHAIN TENSIONER

AME241112040W01

Structure

- A silent chain (link grounding type) type has been adopted for the timing chain to reduce tapping noise caused by matching each sprocket.
- Engine oil inside the engine front cover lubricates the timing chain and each sprocket. The pin part of the timing chain is nitrite-treated to improve abrasion resistance.

Timing Chain Specification.

ITEM	L3
Pitch size (mm {in})	6.35 {0.25}
Pitch number	174

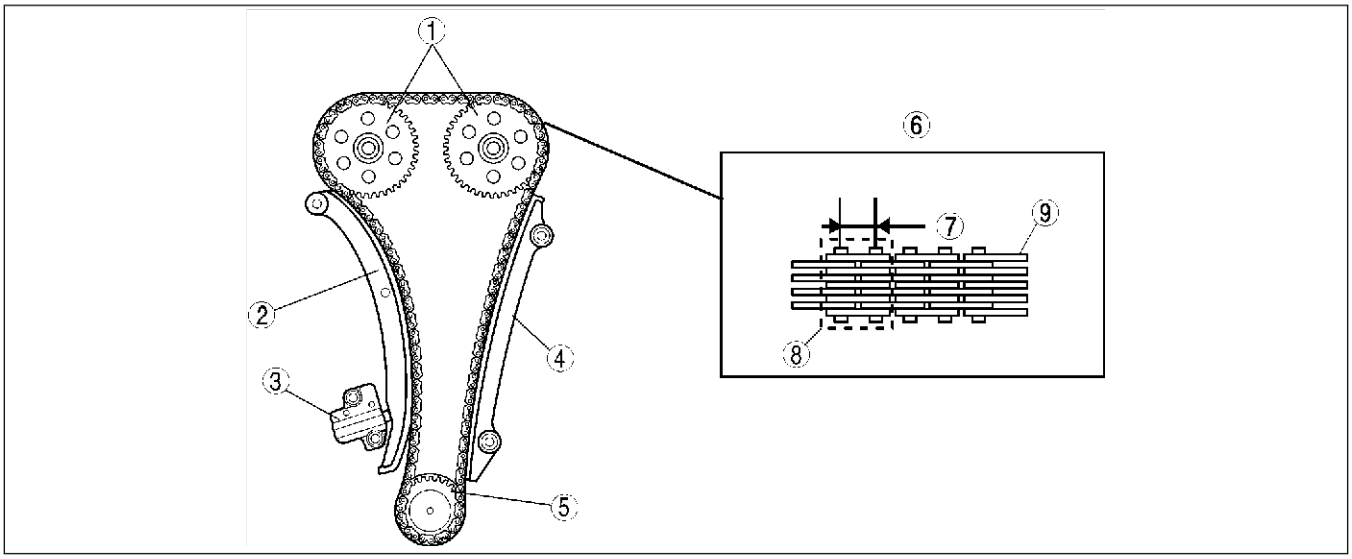

AME2211N002

1	Camshaft sprocket
2	Tensioner arm
3	Chain tensioner
4	Chain guide
5	Crankshaft sprocket

6	Timing chain
7	Pitch size
8	Pitch
9	Link

- Oil pressure type chain tensioner has been adopted for the timing chain tensioner. The tension of the timing chain is maintained constant, using the oil pressure and the spring force in the chain tensioner.
- The oil pressure type chain tensioner consists of the following parts: Piston spring, which depresses the tensioner arm, check ball which maintains pressure to the tensioner arm.

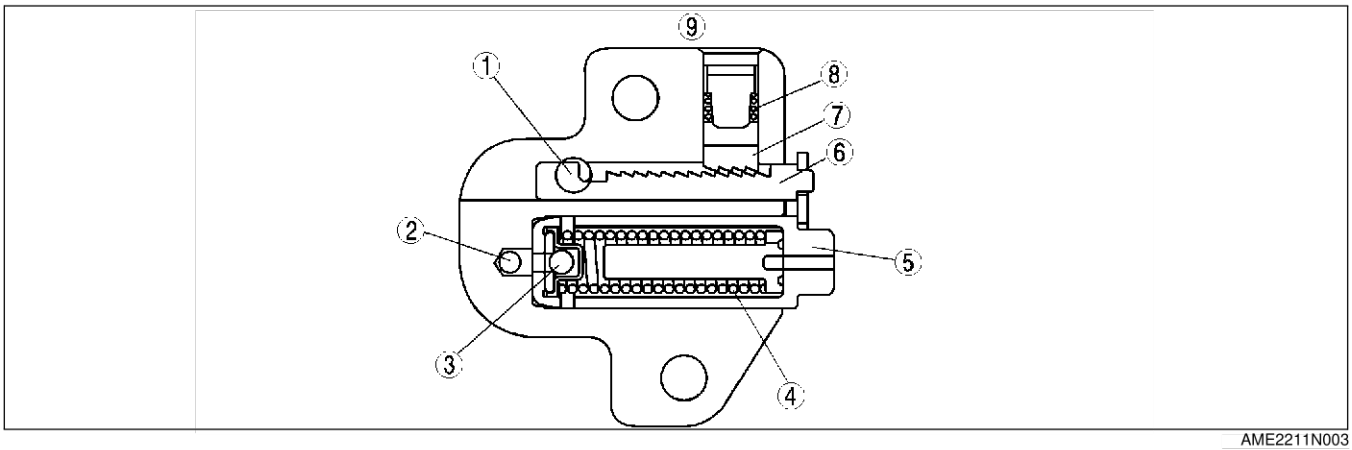

AME2211N003

1	Hole for a ratchet lock
2	Oil supply hole
3	Check ball
4	Piston spring
5	Piston

6	Rack
7	Ratchet
8	Ratchet spring
9	Cross-section

VALVE, VALVE SPRING, VALVE SEAL, VALVE GUIDE

AME241112111W02

Structure

- The valves are heat-resistant steel. There are two intake valves, two exhaust valves per cylinder.

VALVE SPEC.

ITEM		L3
valve full length	(mm {in})	Intake valve: About 101.6 {4.000} Exhaust valve: About102.6 {4.039}
Intake valve umbrella diameter	(mm {in})	About 35 {1.38}
Exhaust valve umbrella diameter	(mm {in})	About 30 {1.18}
Stem diameter	(mm {in})	Intake valve: About 5.5 {0.22} Exhaust valve: About 5.5 {0.22}

- The intake valve and the exhaust valve are treated with the Tufftride process to improve abrasion resistance.
- The valve spring is an uneven outer dimension type. It has been improved by reducing the size of the upper seat.
- The valve guide is made of the sintered alloy to improve abrasion resistance.
- The valve seat is integrated with the lower valve spring seat to simplify the unit and improve its serviceability.

1	Valve keeper
2	Upper valve spring seat
3	Valve spring
4	Valve seal
5	Valve guide
6	Valve

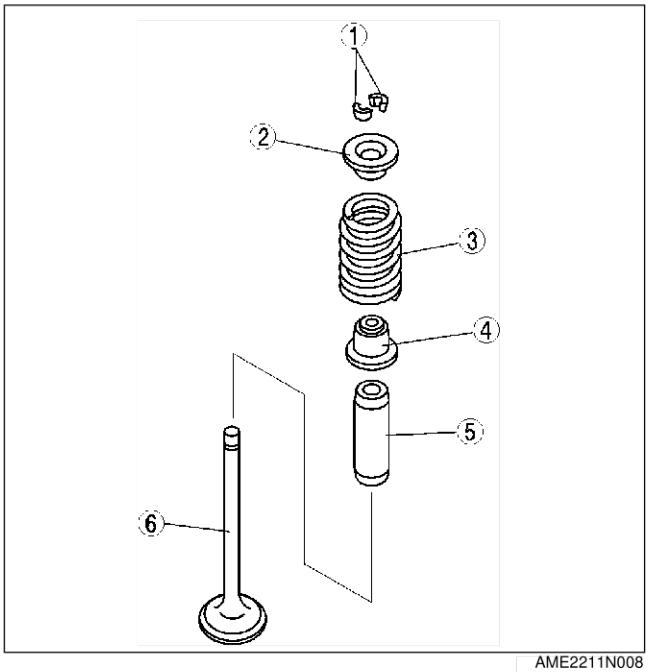

AME2211N008

TAPPET

AME241112111W03

Structure

- The tappet is a shimless tappet which is integrated with the shim.
- The tappet surface is phosphate-coated to smooth the attaching surface to the cam and improve abrasion resistance.
- The valve clearance can be adjusted by replacing the tappet. There are 35 kinds of tappets depending on the thickness. The tapet kind can be determined by the engraved identification mark (3 digits).

Tappet Specification.

Discernment mark	Tappet thickness (mm {in})	The number of jumps (mm {in})
725—625	3.725—3.625 {0.1467—0.1427}	0.025 {0.00098}
602—122	3.602—3.122 {0.1418—0.1229}	0.02 {0.00078}
100—000	3.100—3.000 {0.1220—0.1181}	0.025 {0.00098}

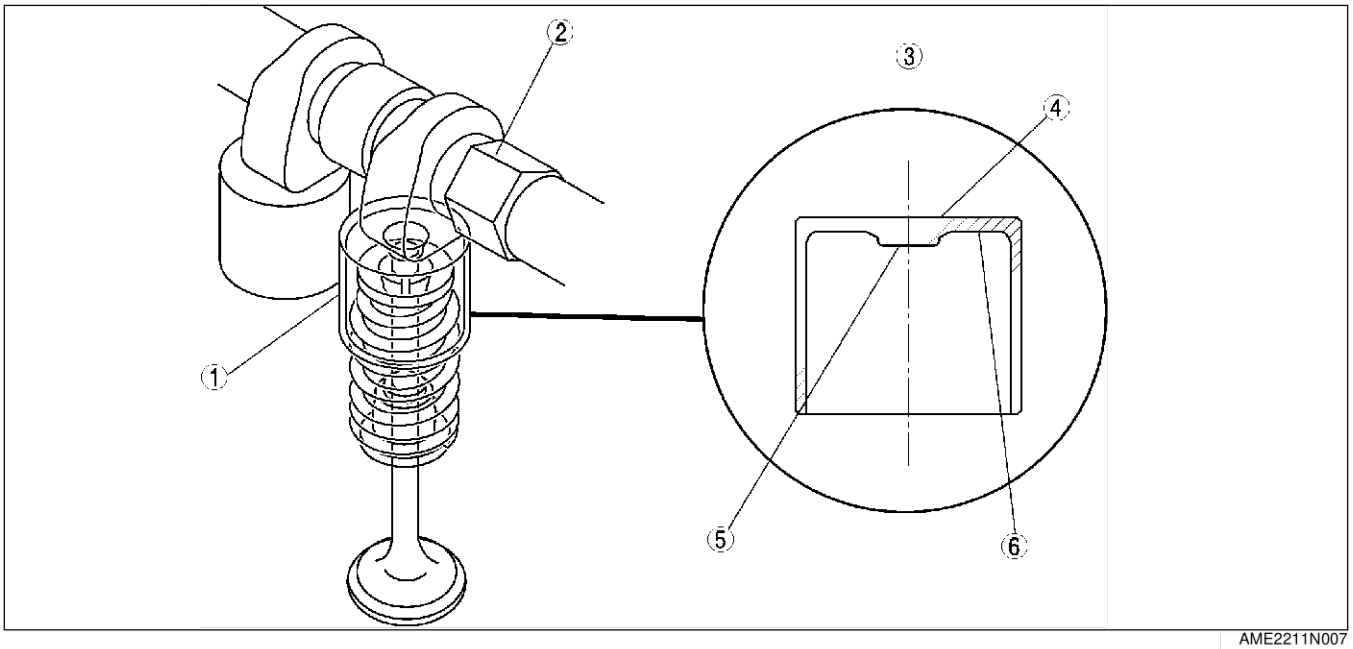

AME2211N007

1	Tappet
2	Camshaft
3	Tappet sectional view

4	Cam lob contact surface
5	Valve stem contact surface
6	Identification mark position

End Of Sec

LOCATION INDEX

LOCATION INDEX

AME240001002W01

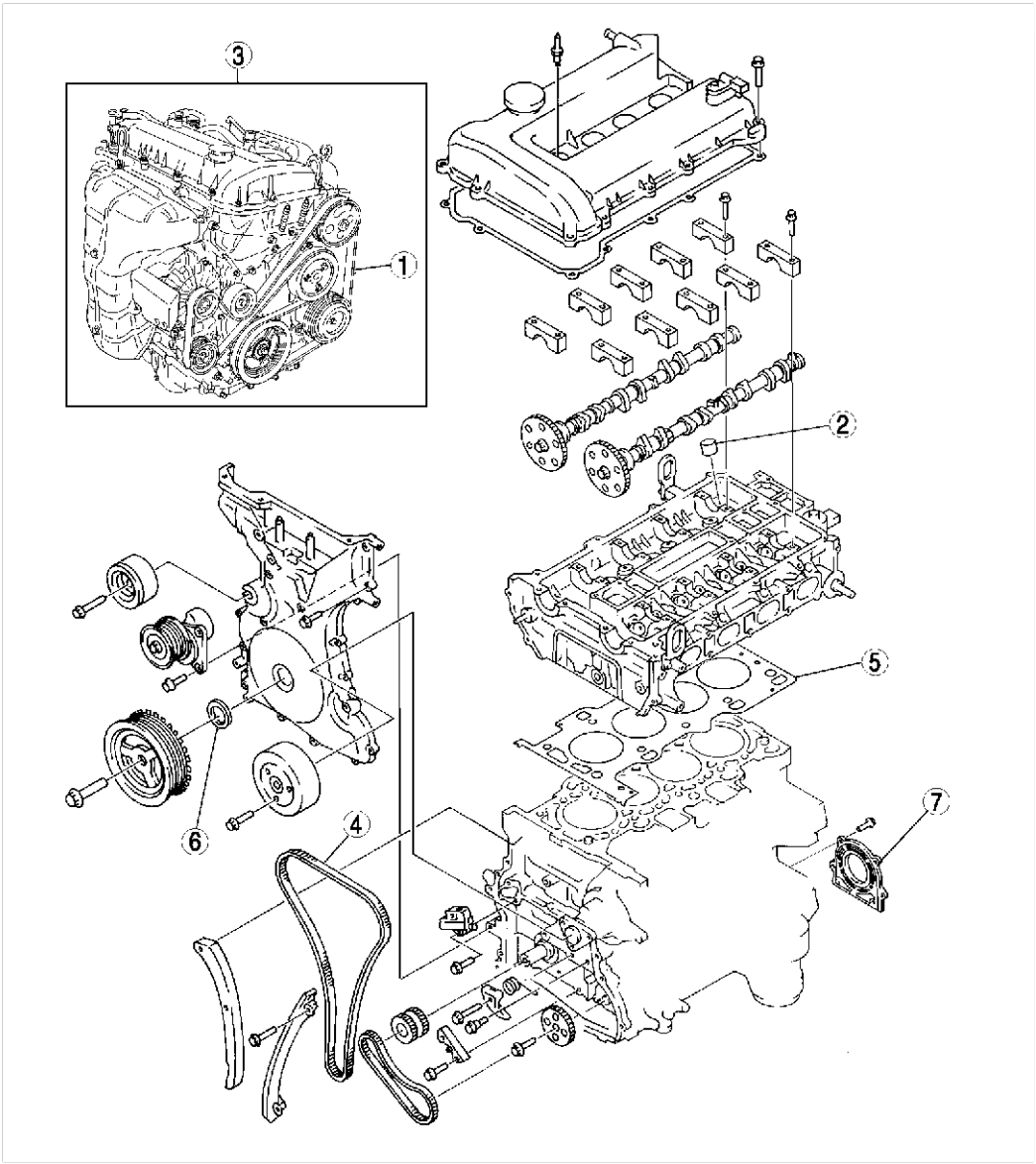

AME2200W001

1	Drive belt (See B3–25 DRIVE BELT INSPECTION) (See B3–25 DRIVE BELT REPLACEMENT) (See B3–26 DRIVE BELT AUTO TENSIONER INSPECTION)
2	Tappet (See B3–26 VALVE CLEARANCE INSPECTION)
3	Engine (See B3–31 COMPRESSION INSPECTION) (See B3–46 ENGINE REMOVAL/INSTALLATION) (See B3–51 ENGINE DISASSEMBLY/ASSEMBLY)

4	Timing Chain (See B3–32 TIMING CHAIN REMOVAL/ INSTALLATION)
5	Cylinder head gasket (See B3–39 CYLINDER HEAD GASKET REPLACEMENT)
6	Front oil seal (See B3–42 FRONT OIL SEAL REPLACEMENT)
7	Rear oil seal (See B3–45 REAR OIL SEAL REPLACEMENT)

End Of Sie

DRIVE BELT

DRIVE BELT INSPECTION

AME241015800W01

Note
- Front and water pump drive belt deflection/tension inspection is not necessary because of the use of the front drive belt auto tensioner.

Front Drive Belt

1. Verify that the drive belt auto tensioner indicator mark does not exceed the limit.
   - If it exceeds the limit, replace the drive belt. (See B3–25 DRIVE BELT REPLACEMENT.)

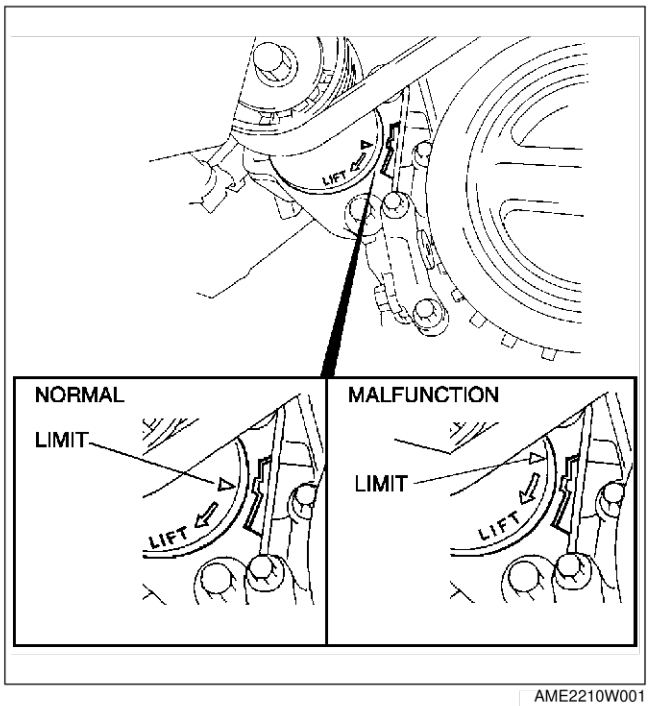

AME2210W001

End Of Ste

DRIVE BELT REPLACEMENT

AME241015800W02

1. Remove the splash shield (RH).
2. Turn the center of the tensioner pulley clockwise to release tension to the drive belt.
3. Remove the drive belt.
4. Reinstall the drive belt or install a new drive belt.
5. Verify that the drive belt auto tensioner indicator mark does not exceed the limit. (See B3–25 DRIVE BELT INSPECTION.)
   - If it exceeds the limit, replace the drive belt.
6. Install the splash shield (RH).

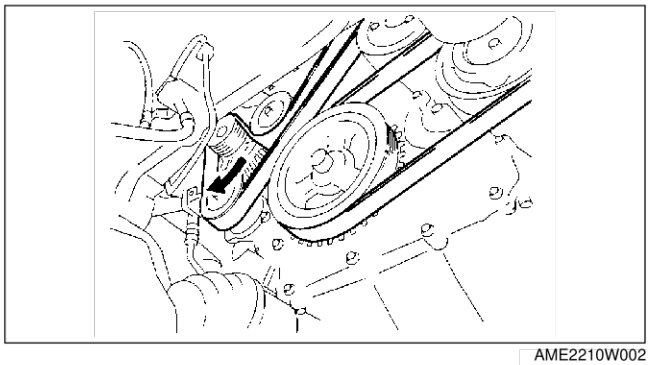

AME2210W002

DRIVE BELT AUTO TENSIONER INSPECTION

AME241015980W01

1. Remove the drive belt. (See B3–25 DRIVE BELT REPLACEMENT.)
2. Verify that the drive belt auto tensioner moves smoothly in the operational direction.
   - Replace the drive belt auto tensioner if necessary.
3. Turn the drive belt auto tensioner pulley by hand and verify that it rotates smoothly.
   - Replace the drive belt auto tensioner if necessary.
4. Install the drive belt. (See B3–25 DRIVE BELT REPLACEMENT.)

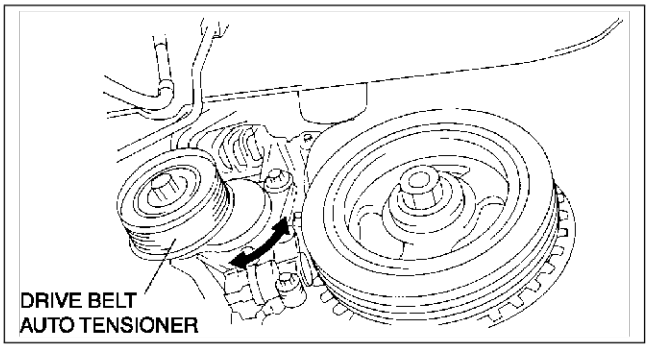

AME2210W003

End Of Sie

VALVE CLEARANCE

VALVE CLEARANCE INSPECTION

AME241212111W01

1. Disconnect the negative battery cable.
2. Remove the splash shield (RH).
3. Remove the spark plugs. (See G–17 SPARK PLUG REMOVAL/INSTALLATION.)
4. Remove the cylinder head cover.
5. Verify that the engine is in cold condition.
6. Measure the valve clearance.
   (1) Turn the crankshaft clockwise so that No.1 piston is at TDC of the compression stroke.
   (2) Measure the valve clearance at A in the figure.
      - If the valve clearance is out of the standard value, adjust it. (See B3–27 VALVE CLEARANCE ADJUSTMENT.)

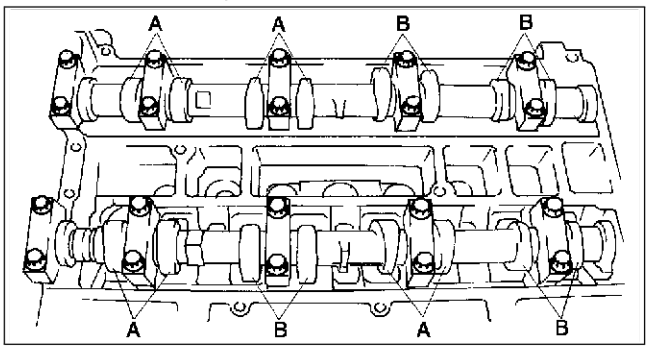

AME2212W001

Note
- Make sure to note down the measured values for choosing the suitable replacement tappets.

Standard [Engine cold]
IN: 0.22—0.28 mm {0.0087—0.0110 in}
(0.25±0.03 mm {0.0098±0.0011 in})
EX: 0.27—0.33 mm {0.0106—0.0130 in} (0.30±0.03 mm {0.0118±0.0011 in})

   (3) Turn the crankshaft **360°** clockwise so that No.4 piston is at TDC of the compression stroke.
   (4) Measure the valve clearance at B in the figure.
      - If the valve clearance is out of the standard value, adjust it. (See B3–27 VALVE CLEARANCE ADJUSTMENT.)

Note
- Make sure to note down the measured values for choosing the suitable replacement tappets.

Standard [Engine cold]
IN: 0.22—0.28 mm {0.0087—0.0110 in} (0.25±0.03 mm {0.0098±0.0011 in})
EX: 0.27—0.33 mm {0.0106—0.0130 in} (0.30±0.03 mm {0.0118±0.0011 in})

7. Install the cylinder head cover. (See B3–38 Cylinder Head Cover Installation Note.)
8. Install the spark plugs. (See G–17 SPARK PLUG REMOVAL/INSTALLATION.)
9. Install the splash shield (RH).

End Of Sie

VALVE CLEARANCE ADJUSTMENT

AME241212111W02

1. Disconnect the negative battery cable.
2. Remove the splash shield (RH).
3. Remove the spark plugs. (See G–17 SPARK PLUG REMOVAL/INSTALLATION.)
4. Remove the cylinder head cover.
5. Remove the drive belt. (See B3–25 DRIVE BELT REPLACEMENT.)
6. Remove the joint shaft from the front drive shaft (RH). (See M–18 DRIVE SHAFT (L3) REMOVAL/INSTALLATION.)
7. Remove the engine front cover lower blind plug.

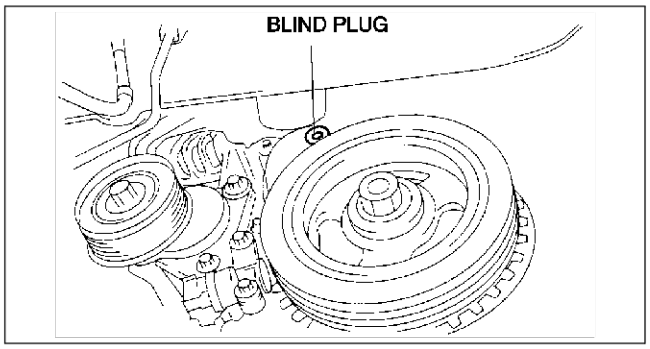

AME2212W002

8. Remove the engine front cover upper blind plug.
9. Remove the cylinder block lower blind plug.

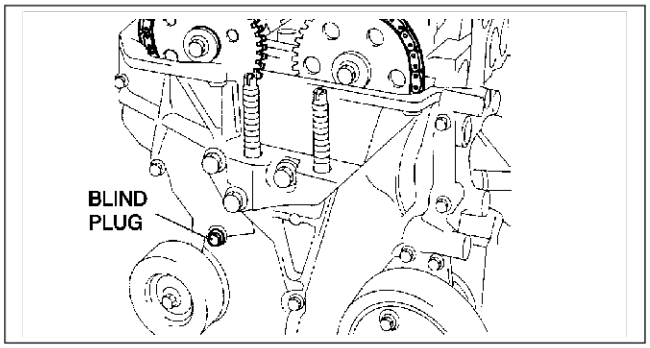

AME2212W003

10. Install the **SST** as shown.
11. Turn the crankshaft clockwise the crankshaft is in No.1 cylinder TDC position.
12. Loosen the timing chain.

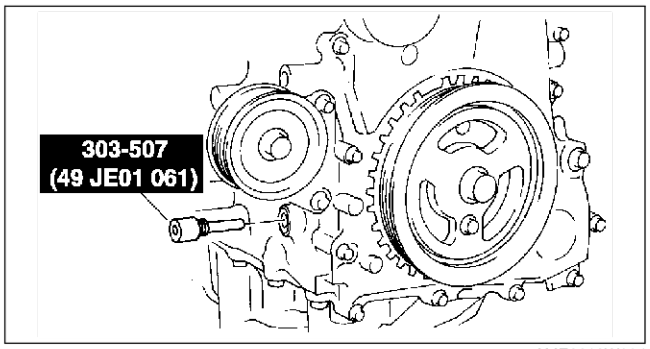

AME2212W004

(1) Unlock the chain tensioner ratchet using a suitable screwdriver or equivalent tool.
(2) Turn the exhaust camshaft clockwise using a suitable wrench on the cast hexagon and loosen the timing chain.
(3) Placing the suitable bolt **(M6×1.0 length 25mm—35mm)** at the engine front cover upper blind plug, secure the chain guide at the position where the tension is released.

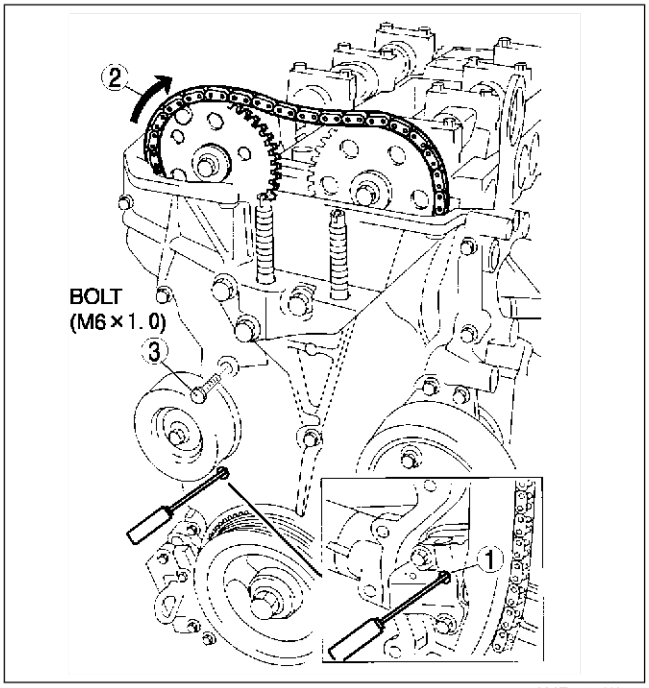

AME2212W005

13. Hold the exhaust camshaft using a suitable wrench on the cast hexagon as shown.

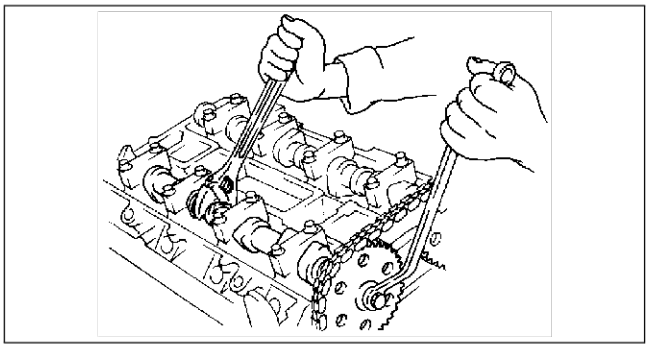
AME2212W006

14. Remove the exhaust camshaft sprocket.

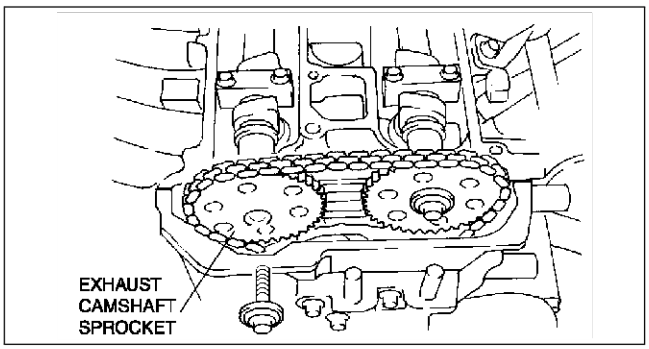

AME2212W007

15. Loosen the camshaft cap bolts in two or three steps in the order shown.

Note
- The cylinder head and the camshaft caps are numbered to be reassembled in their original position correctly. When removed, keep the caps with the cylinder head they were removed from. Do not mix the caps.

16. Remove the camshaft.
17. Remove the tappet.

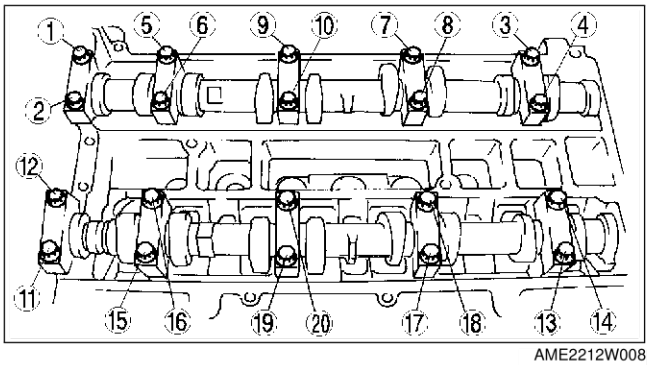

AME2212W008

18. Select proper adjustment shim.

    New adjustment shim
    = Removed shim thickness + Measured valve clearance - Standard valve clearance (IN: 0.25 mm {0.0098 in}, EX: 0.30 mm {0.0118 in})

    Standard [Engine cold]
    IN: 0.22—0.28 mm {0.0087—0.0110 in} (0.25±0.03 mm {0.0098±0.0011 in})
    EX: 0.27—0.33 mm {0.0106—0.0130 in} (0.30±0.03 mm {0.0118±0.0011 in})

19. Install the camshaft with No.1 cylinder aligned with the TDC position.
20. Tighten the camshaft cap bolt with the following two steps.
    (1) Tighten to **5.0—9.0 N·m {51.0—91.7 kgf·cm, 44.3—79.5 in·lbf}**.
    (2) Tighten to **14.0—17.0 N·m {1.5—1.7 kgf·m, 10.4—12.5 ft·lbf}**.

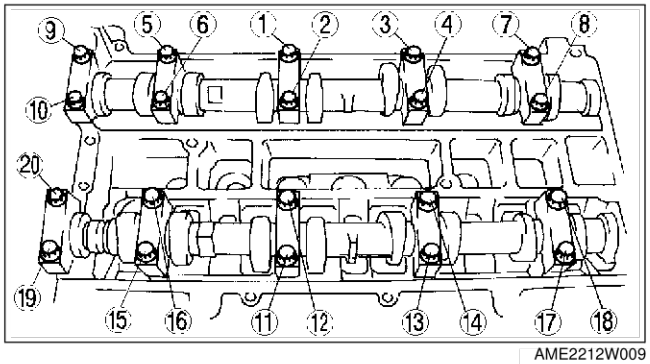

AME2212W009

21. Install the exhaust camshaft sprocket.

    Note
    - Do not tighten the bolt for the camshaft sprocket during this step. First confirm the valve timing, then tighten the bolt.

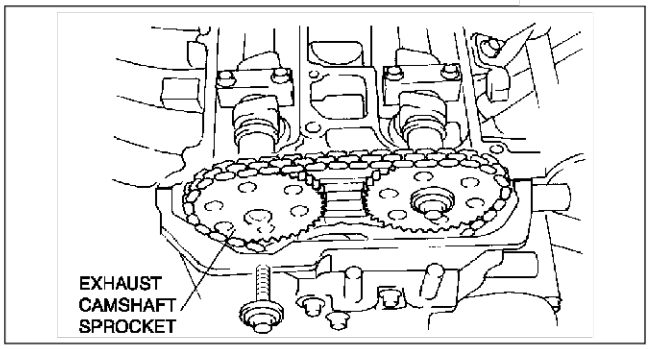

AME2212W007

22. Install the **SST** to the camshaft as shown.
23. Remove the **M6 x 1.0** bolt from the engine front cover to apply tension to the timing chain.
24. Turn the crankshaft clockwise until the crankshaft is in No.1 cylinder TDC position (until the balance weight is attached to the **SST**).

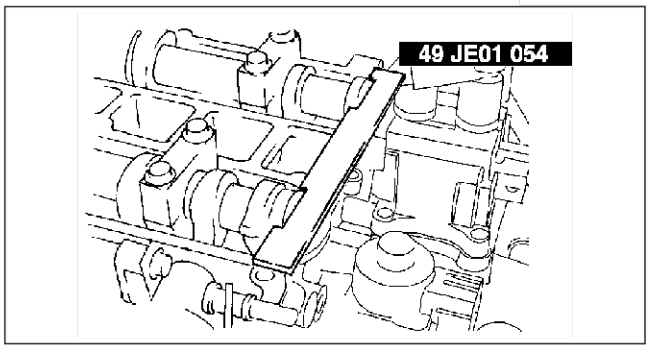

AME2212W010

25. Hold the exhaust camshaft using a suitable wrench on the cast hexagon as shown.
26. Tighten the exhaust camshaft sprocket lock bolt.

N·m {kgf·m, ft·lbf}

Bolt type	Tigtining torque
Bolt and washer assembly	69—75 {7.1—7.6, 50.9—55.3}
Washer based bolt	89—95 {9.1—9.6, 65.7—70.0}

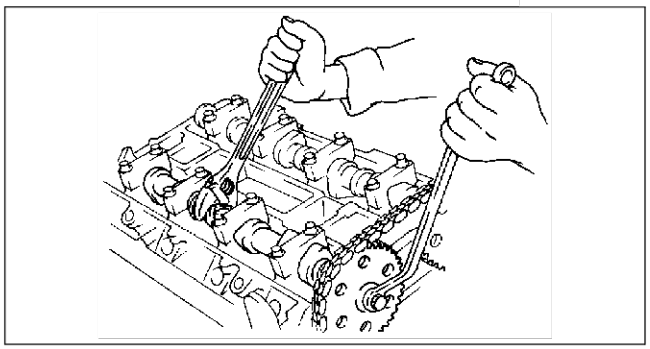
AME2212W006

27. Remove the **SST** from the camshaft.
28. Remove the **SST** from the block lower blind plug.
29. Rotate the crankshaft clockwise two turns until the TDC position.
    - If not aligned, loosen the crankshaft pulley lock bolt and repeat from Step 14.
30. Apply silicone sealant to the engine front cover upper blind plug.

31. Install the engine front cover upper blind plug.

    Tightening torque:
    8.0— 11.5N·m {81.6—117.2 kgf·cm, 70.9—101.7 in·lbf}

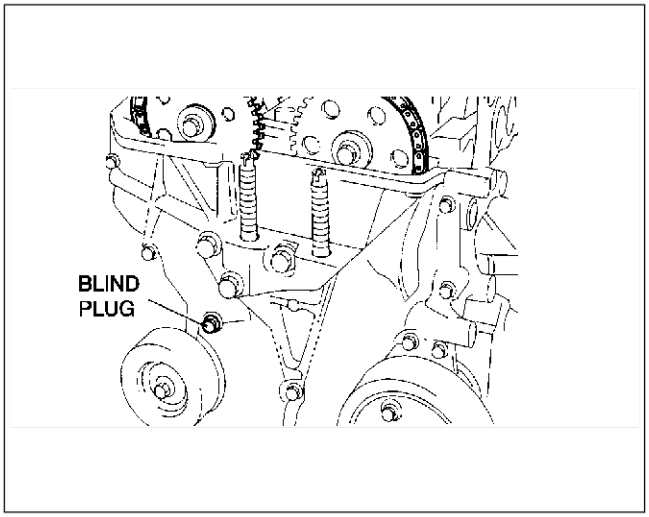

AME2212W003

32. Install the cylinder block lower blind plug.

    Tightening torque:
    18—22 N·m {1.9—2.2 kgf·m, 13.3—16.2 ft·lbf}

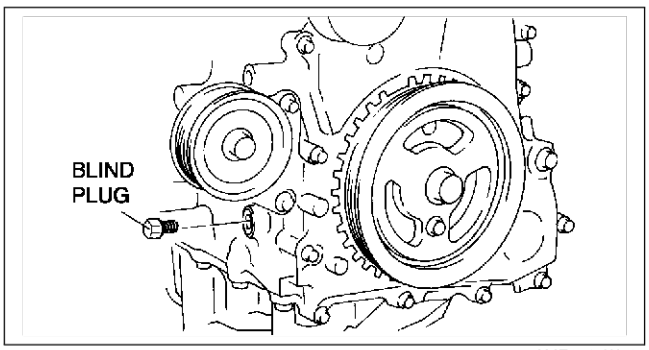

AME2212W012

33. Install the engine front cover lower new blind plug.

    Tightening torque:
    10.0— 14.0N·m {1.0 —1.4kgf·m, 7.4 —10.3ft·lbf}

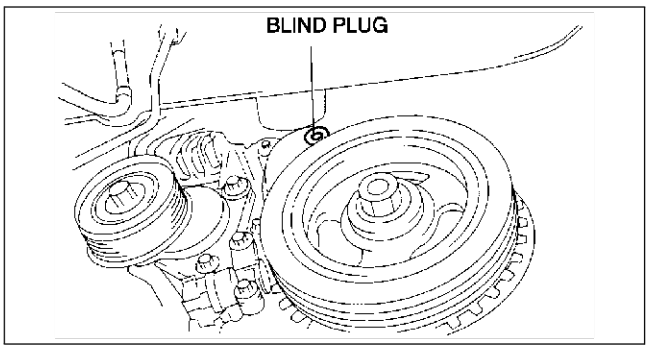

AME2212W002

34. Connect the front drive shaft (RH) and the joint shaft. (See M–18 DRIVE SHAFT (L3) REMOVAL/INSTALLATION.)
35. Install the drive belt. (See B3–25 DRIVE BELT REPLACEMENT.)
36. Install the cylinder head cover. (See B3–38 Cylinder Head Cover Installation Note.)
37. Install the spark plugs. (See G–17 SPARK PLUG REMOVAL/INSTALLATION.)
38. Install the splash shield (RH).

End Of Sie

COMPRESSION PRESSURE

COMPRESSION INSPECTION

AME241402000W01

Warning
- **Hot engines and oil can cause severe burns. Be careful not to burn yourself during removal/ installation of each component.**

1. Verify that the battery is fully charged.
   - Recharge it if necessary. (See G–10 BATTERY INSPECTION.)
2. Warm up the engine to the normal operating temperature.
3. Stop the engine and allow it to cool down for **about 10 min**.
4. Perform “Fuel Line Safety Procedures”. Leave the fuel pump relay removed. (See F3–57 BEFORE REPAIR PROCEDURE.)

Warning
- **Fuel vapor is hazardous. It can very easily ignite, causing serious injury and damage. Always keep sparks and flames away from fuel.**
- **Fuel line spills and leakage are dangerous. Fuel can ignite and cause serious injuries or death and damage. Fuel can also irritate skin and eyes. To prevent this, always complete the “Fuel Line Safety Procedure”. (See F3–57 Fuel Line Safety Procedure.)**

5. Remove the ignition coil connector.
6. Remove the spark plugs. (See G–17 SPARK PLUG REMOVAL/INSTALLATION.)
7. Connect a compression gauge into the spark plug hole.
8. Fully depress the accelerator pedal and crank the engine.
9. Note down the maximum gauge reading.
10. Inspect each cylinder as above.
    - If the measured value is less than the limited value, or there is a cylinder whose compression value varies from that of other cylinders by **196.1 kPa {2.0 kgf/cm^2, 28 psi}** or more, add a small amount of engine oil through the spark plug hole. Then measure the compression pressure and perform the respective operations for the following cases.
      — If the compression increases, the piston, the piston rings, or cylinder wall may be worn and overhaul is required.
      — If the compression stays low, a valve may be stuck or improperly seated and overhaul is required.
      — If the compression in adjacent cylinders stays low, the cylinder head gasket may be damaged or the cylinder head distorted and overhaul is required.

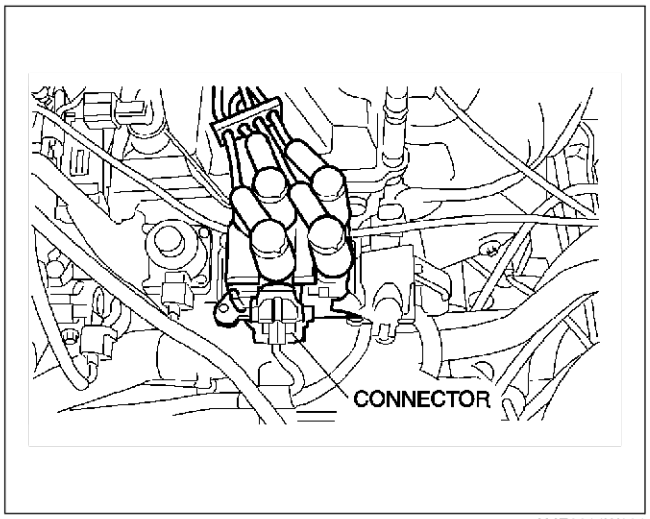

AME2214W001

Compression

kPa {kgf/cm^2, psi} [rpm]

Item	Engine type
	L3
Standard	1,530 {15.6, 221.8} [300]
Minimum	1,070 {10.9, 155.0} [300]
Maximum difference between cylinders	196.1 {2.0, 28}

11. Disconnect the compression gauge.
12. Install the spark plugs. (See G–17 SPARK PLUG REMOVAL/INSTALLATION.)
13. Connect the ignition coil connector.
14. Install the fuel pump relay. (See F3–57 BEFORE REPAIR PROCEDURE.)

End Of Sec

TIMING CHAIN

TIMING CHAIN REMOVAL/INSTALLATION

AME241512201W01

Warning

- **Fuel vapor is hazardous. It can very easily ignite, causing serious injury and damage. Always keep sparks and flames away from fuel.**
- **Fuel line spills and leakage are dangerous. Fuel can ignite and cause serious injures or death and damage. Fuel can also irritate skin and eyes. To prevent this, always complete the "Fuel Line Safety Procedure". (See F3–57 Fuel Line Safety Procedure.)**

1. Disconnect the negative battery cable.
2. Remove the spark plugs. (See G–17 SPARK PLUG REMOVAL/INSTALLATION.)
3. Remove the under cover.
4. Loosen the water pump pulley bolt and removal the drive belt. (See B3–25 DRIVE BELT REPLACEMENT.)
5. Remove the CKP sensor. (See F3–91 CRANKSHAFT POSITION (CKP) SENSOR REMOVAL/INSTALLATION.)
6. Drain the engine oil. (See D–16 ENGINE OIL REPLACEMENT.)
7. Remove the P/S oil pump with the oil hose still connected and position the P/S oil pump so that it is out of the way. (See N–12 POWER STEERING OIL PUMP (L3) REMOVAL/INSTALLATION.)
8. Remove the front drive shaft (RH) from the joint shaft. (See M–4 JOINT SHAFT (L3) REMOVAL/INSTALLATION.)
9. Remove in the order indicated in the table.
10. Install in the reverse order of removal.
11. Start the engine and:
    - Inspect for the engine oil, engine coolant, transaxle oil and fuel leakage.
    - Verify the ignition timing, idle speed and idle mixture. (See F3–49 IGNITION TIMING INSPECTION.) (See F3-49 IDLE SPEED INSPECTION) (SeeF3–49 IDLE MIXTURE INSPECTION.)
12. Perform a road test.

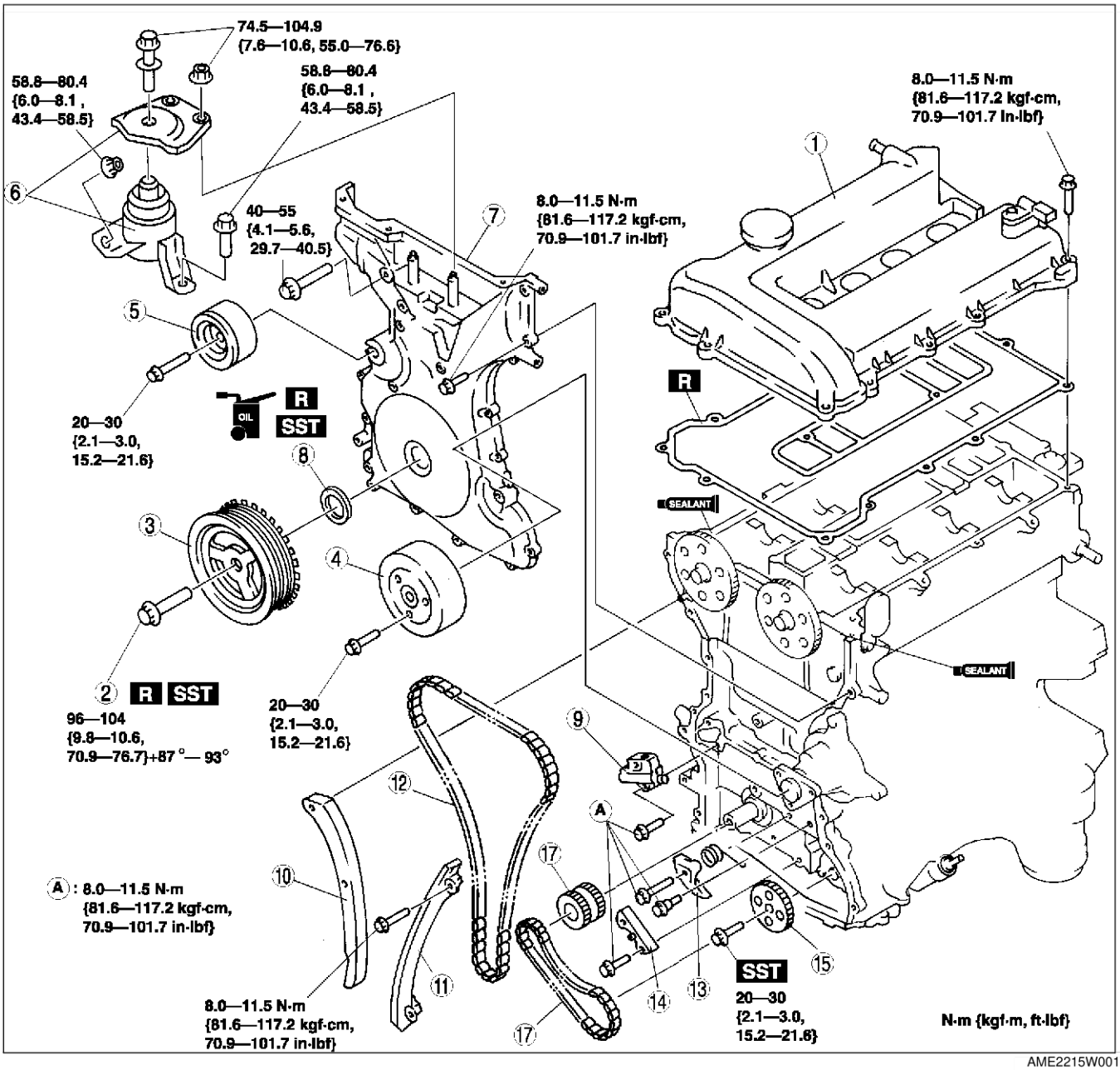

AME2215W001

1	Cylinder head cover (See B3–38 Cylinder Head Cover Installation Note)
2	Crankshaft pulley lock bolt (See B3–34 Crankshaft Pulley Lock Bolt Removal Note) (See B3–37 Crankshaft Pulley Lock Bolt Installation Note)
3	Crankshaft pulley
4	Water pump pulley
5	Drive belt idler pulley
6	No.3 engine mount rubber and No.3 engine joint bracket (See B3–34 No.3 Engine Mount Rubber and No.3 Engine Joint Bracket Removal Note) (See B3–37 No.3 Engine Mount Rubber and No.3 Engine Joint Bracket Installation Note)
7	Engine front cover (See B3–36 Engine Front Cover Installation Note)

8	Front oil seal (See B3–35 Engine Front Cover Removal Note) (See B3–36 Front Oil Seal Installation Note)
9	Chain tensioner (See B3–34 Chain Tensioner Removal Note)
10	Tensioner arm
11	Chain guide
12	Timing chain (See B3–35 Timing Chain Installation Note)
13	Oil pump chain tensioner
14	Oil pump chain guide
15	Oil pump sprocket (See B3–35 Oil Pump Sprocket Removal Note) (See B3–35 Oil Pump Sprocket Installation Note)
16	Oil pump chain
17	Camshaft sprocket

Crankshaft Pulley Lock Bolt Removal Note

1. Remove the cylinder block lower blind plug.
2. Install the **SST**.
3. Turn the crankshaft clockwise the crankshaft is in No.1 cylinder TDC position.

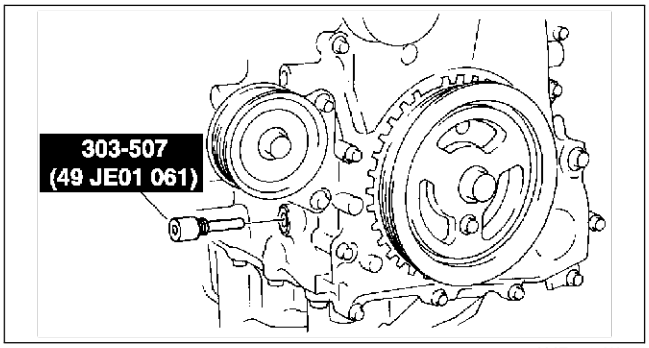

AME2212W004

4. Hold the crankshaft pulley using the **SSTs**.

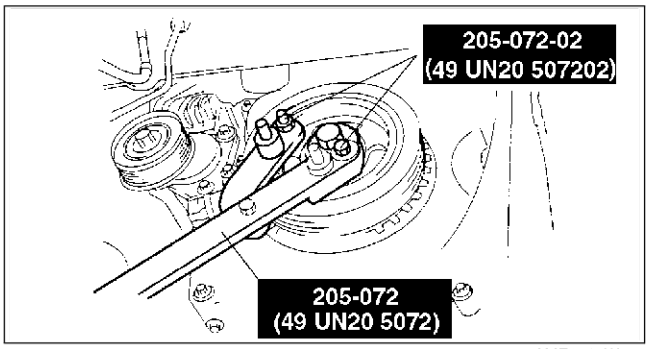

AME2215W002

Chain Tensioner Removal Note

1. Hold the chain tensioner ratchet lock mechanism away from the ratchet stem using a thin screwdriver.
2. Slowly compress the tensioner piston.
3. Hold the tensioner piston using a **1.5 mm {0.059 in}** wire or paper clip.

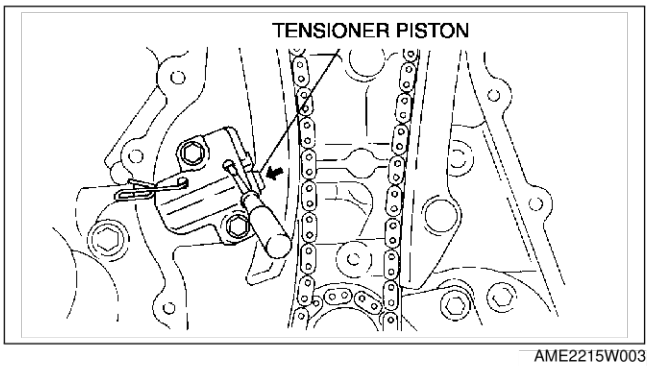

AME2215W003

No.3 Engine Mount Rubber and No.3 Engine Joint Bracket Removal Note

1. Suspend the engine using the **SSTs.**

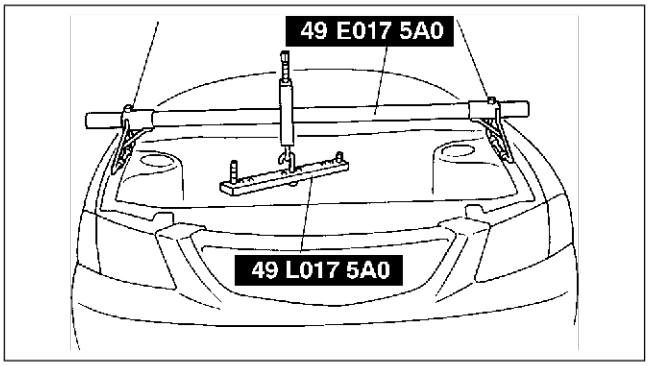

AMJ2224W002

Oil Pump Sprocket Removal Note

1. Hold the oil pump sprocket using the **SST**.

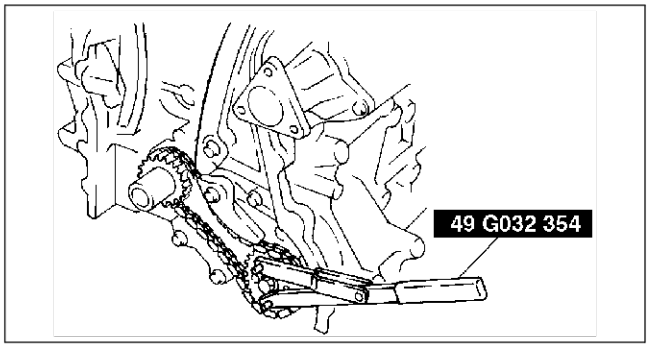

AME2215W005

Engine Front Cover Removal Note

1. Remove the oil seal using a screwdriver as shown.

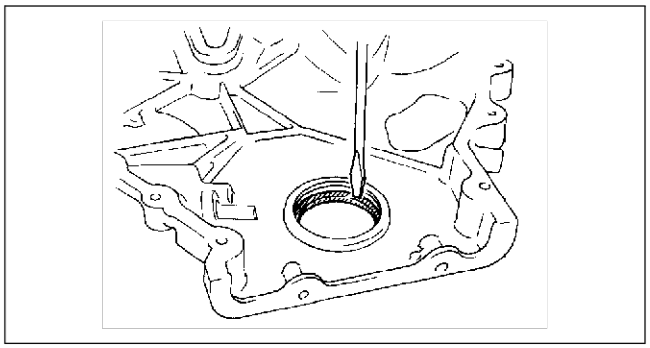

AME2215W006

Oil Pump Sprocket Installation Note

1. Hold the oil pump sprocket using the **SST**.

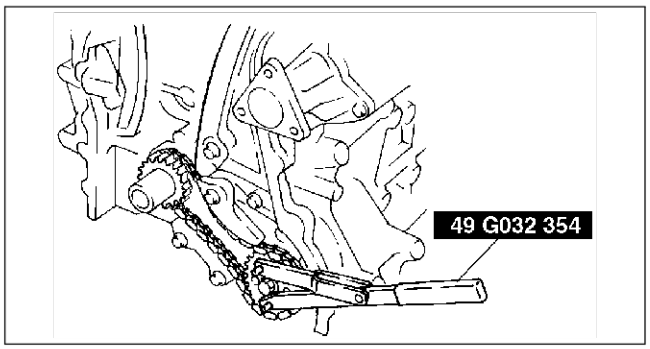

AME2215W005

Timing Chain Installation Note

1. Install the **SST** to the camshaft as shown.
2. Install the timing chain.
3. Remove the retaining wire or paper clip from the auto tensioner to apply tension to the timing chain.

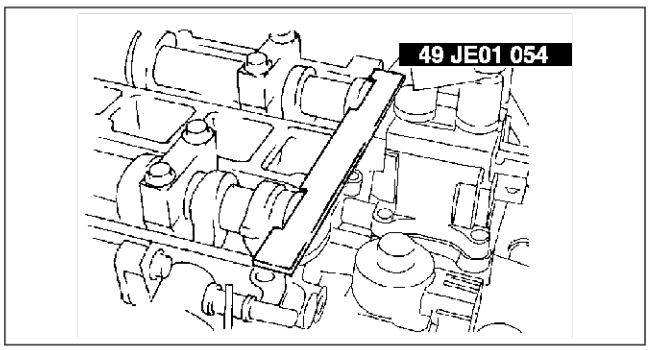

AME2212W010

Engine Front Cover Installation Note

1. Apply silicone sealant to the engine front cover as shown.

Caution
- **Install the cylinder head cover within 10 min of applying the silicone sealant.**

Thickness
A: 2.0—3.0 mm {0.079—0.118 in}
B: 1.5—2.5 mm {0.059—0.098 in}

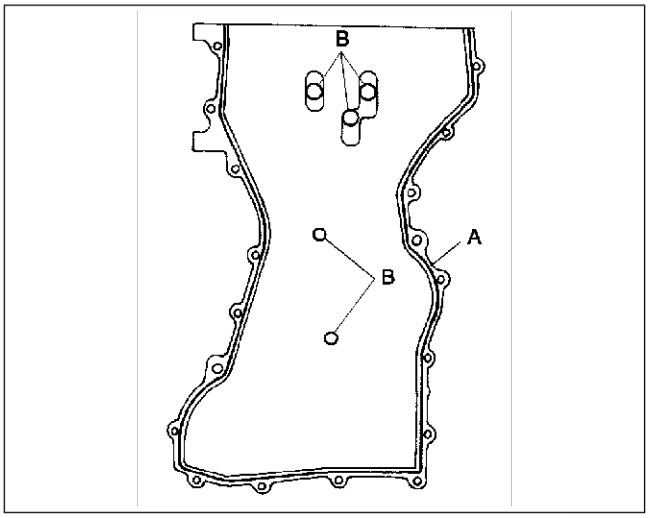

AME2215W007

2. Install the cylinder head cover bolts in the order as shown.

Bolt No.	Tightening torque (N·m {kgf·m, ft·lbf})
1—18	8.0—11.5 {81.6—117.2, 70.9—101.7}
19—22	40—55 {4.1—5.6, 29.7—40.5}

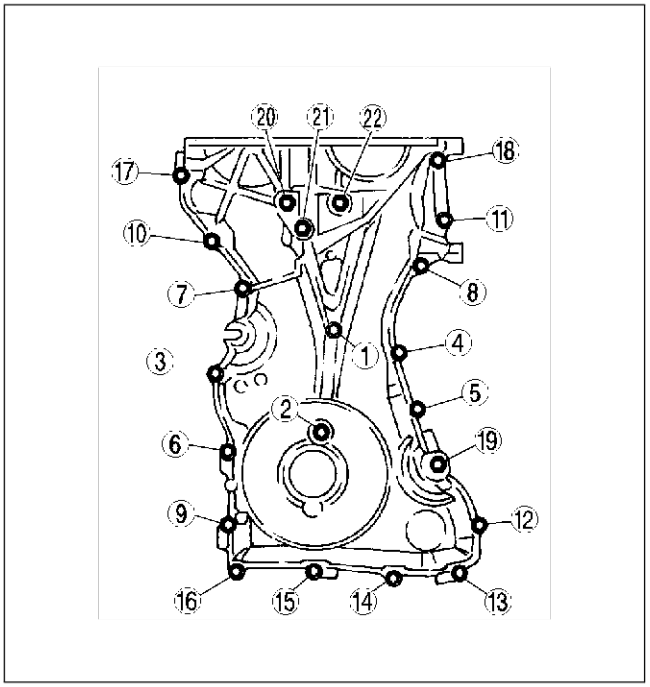

AME2215W008

Front Oil Seal Installation Note

1. Apply clean engine oil to the oil seal.
2. Push the oil seal slightly in by hand.
3. Compress the oil seal using the **SST** and a hammer.

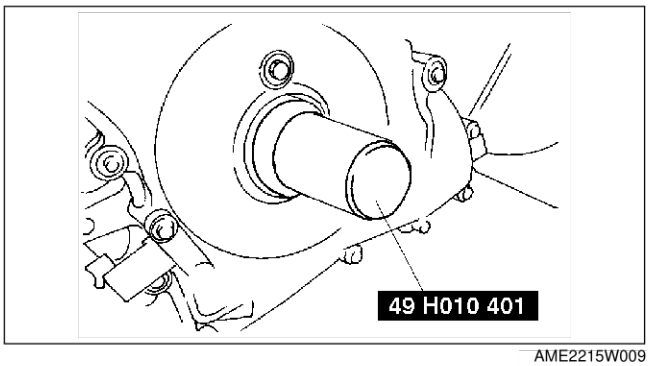

AME2215W009

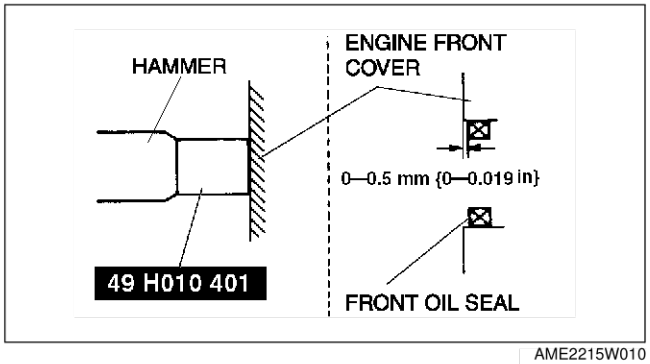

AME2215W010

No.3 Engine Mount Rubber and No.3 Engine Joint Bracket Installation Note

1. Tighten the stud bolt of No.3 engine mount bracket.

   Tightening torque:
   7.0—13 N·m {71.4—132.5 kgf·cm, 62.0—115.0 in·lbf}

2. Hand-tighten No.3 engine mount rubber and No.3 engine joint bracket.

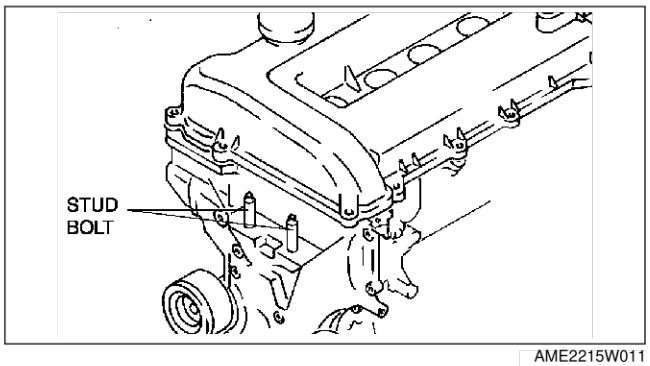

AME2215W011

3. Tighten the bolts and nuts in the order shown.

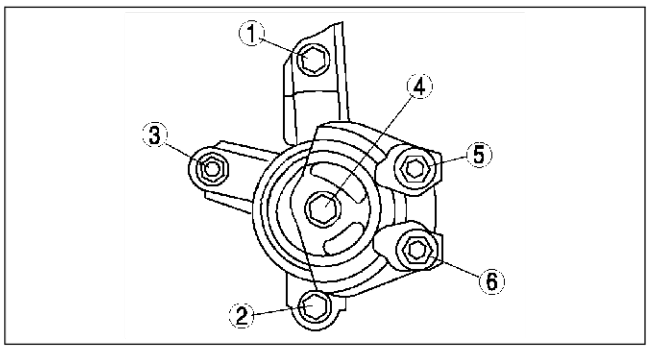

AME2215W012

Crankshaft Pulley Lock Bolt Installation Note

1. Install the **SST** to the camshaft as shown.

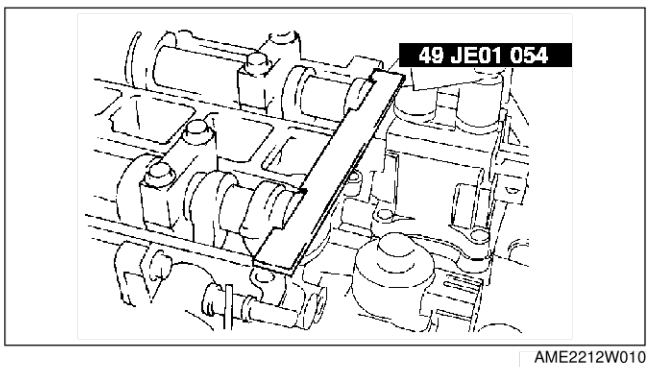

AME2212W010

2. Install the **M6 x 1.0** bolt in by hand.
3. Turn the crankshaft clockwise until the crankshaft is in No.1 cylinder TDC position (until the balance weight is attached to the **SST**).

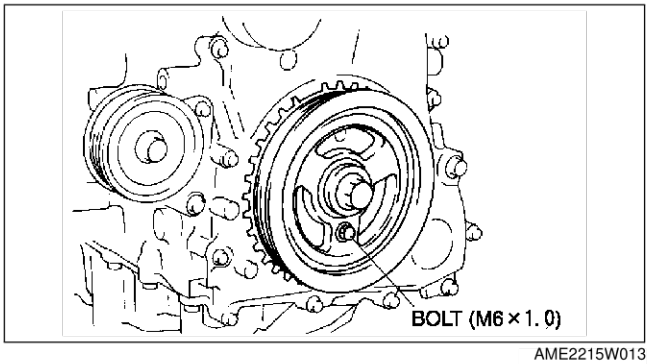

AME2215W013

4. Hold the crankshaft pulley using the **SST**.
5. Tighten the crankshaft pulley lock bolt using the following two steps.
   (1) Tighten to **96—104 N·m {9.8—10.6 kgf·m, 70.9—76.7 ft·lbf}**
   (2) Tighten **87°—93°**
6. Remove the **M6 x 1.0** bolt.
7. Remove the **SST** from the camshaft.
8. Remove the **SST** from the cylinder block lower blind plug.
9. Rotate the crankshaft clockwise two turns until the TDC position.
   - If not aligned, loosen the crankshaft pulley lock bolt and repeat from Step 1.
10. Install the cylinder block lower blind plug.

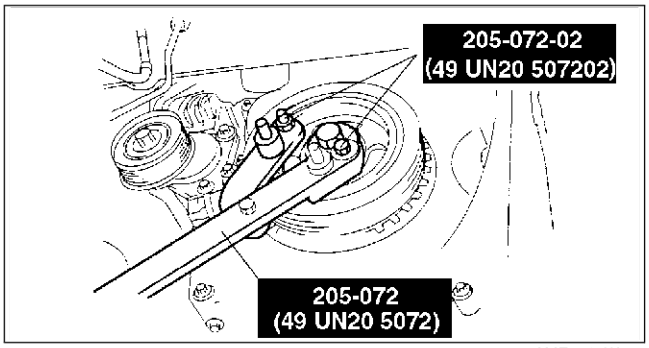

AME2215W002

Tightening torque:
18—22 N·m {1.9—2.2 kgf·m, 13.3—16.2 ft·lbf}

Cylinder Head Cover Installation Note

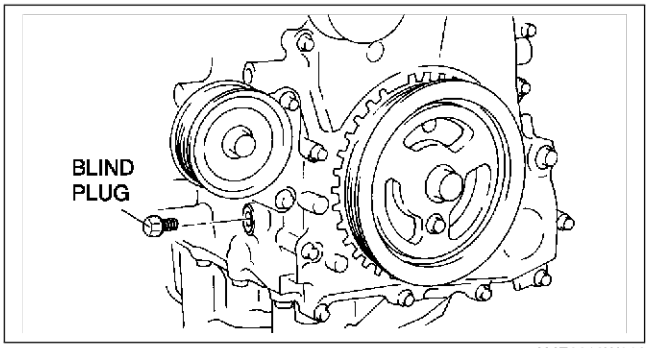

AME2212W012

1. Apply silicone sealant to the mating faces as shown.

Caution
- **Install the cylinder head cover within 10 min of applying the silicone sealant.**

Dot diameter:
4.0—6.0 mm {0.16—0.23 in}

2. Install the cylinder head cover with a new gasket.

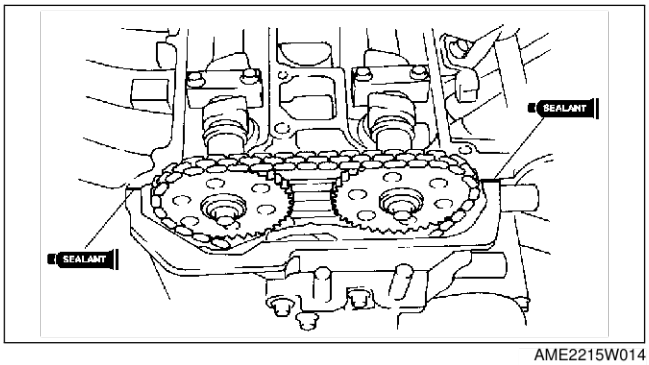

AME2215W014

3. Tighten the bolts in the order shown.

Tightening torque:
8.0—11.5 N·m {81.6—122.3 kgf·cm, 70.9—106.2 in·lbf}

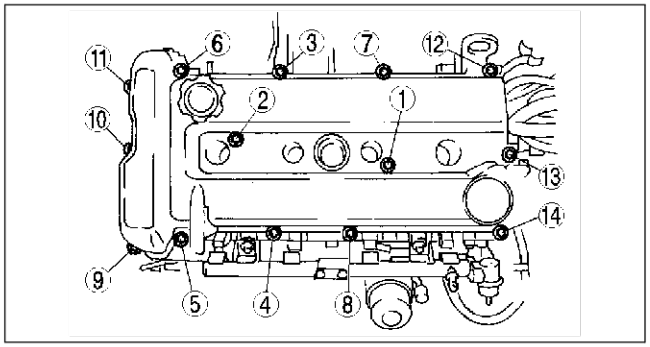

AME2215W015

End Of Sta

CYLINDER HEAD GASKET

CYLINDER HEAD GASKET REPLACEMENT

AME241810271W01

Warning
- **Fuel vapor is hazardous. It can very easily ignite, causing serious injury and damage. Always keep sparks and flames away from fuel.**
- **Fuel line spills and leakage are dangerous. Fuel can ignite and cause serious injuries or death and damage. Fuel can also irritate skin and eyes. To prevent this, always complete the "Fuel Line Safety Procedure". (See F3–57 Fuel Line Safety Procedure.)**

1. Remove the timing chain. (See B3–32 TIMING CHAIN REMOVAL/INSTALLATION.)
2. Remove the ignition coil. (See G–15 IGNITION COIL REMOVAL/INSTALLATION.)
3. Disconnect the generator, but do not remove it from the vehicle.
4. Fix the generator using a rope to prevent it from falling. (See G–11 GENERATOR REMOVAL/INSTALLATION.)
5. Remove the front pipe. (See F3–73 EXHAUST SYSTEM REMOVAL/INSTALLATION.)
6. Remove the intake manifold. (See F3–50 INTAKE-AIR SYSTEM REMOVAL/INSTALLATION.)
7. Disconnect the heater hose, bypass hose, and radiator hose.
8. To firmly support the engine, first set the engine jack and attachment to the oil pan.
9. Remove in the order indicated in the table.
10. Install in the reverse order of removal.
11. Inspect the compression. (See B3–31 COMPRESSION INSPECTION.)

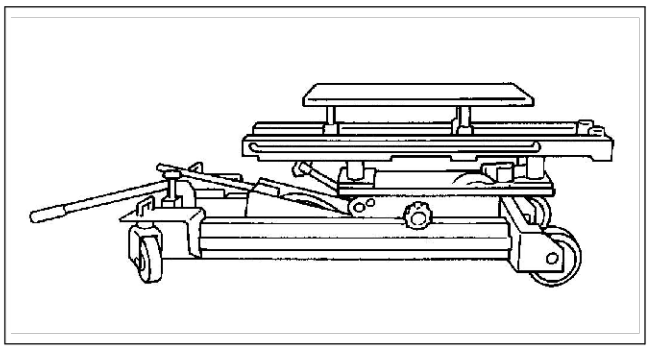

AME2218W001

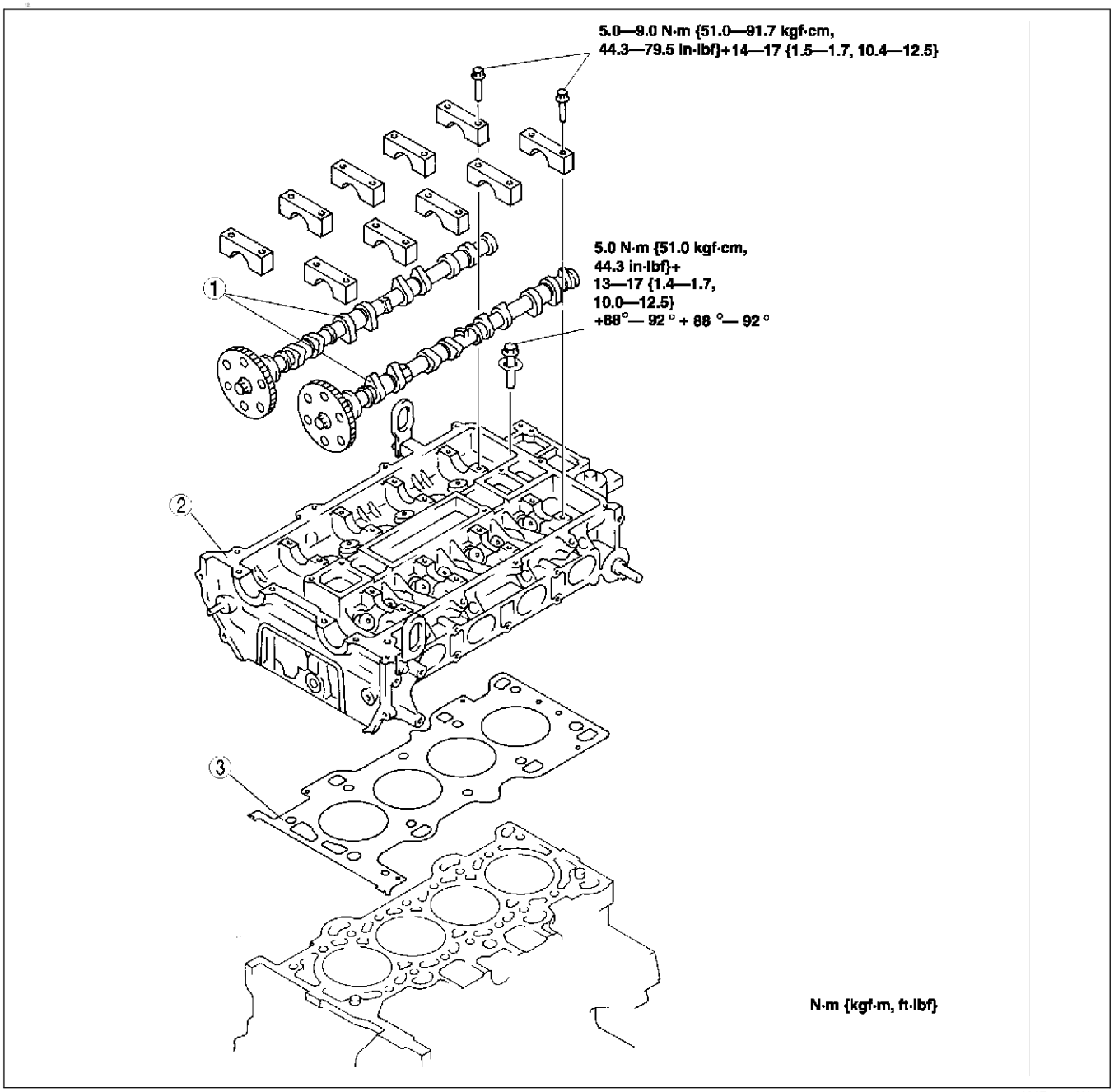

AME2218W002

1	Camshaft (See B3–41 Camshaft Removal Note) (See B3–42 Camshaft Installation Note)

2	Cylinder head (See B3–41 Cylinder Head Removal Note) (See B3–41 Cylinder Head Installation Note)
3	Cylinder head gasket

Camshaft Removal Note

Note
- The cylinder head and the camshaft caps are numbered to be reassembled in their original position correctly. When removed, keep the caps with the cylinder head they were removed from. Do not mix the caps.

1. Loosen the camshaft cap bolts in two or three steps in the order shown.

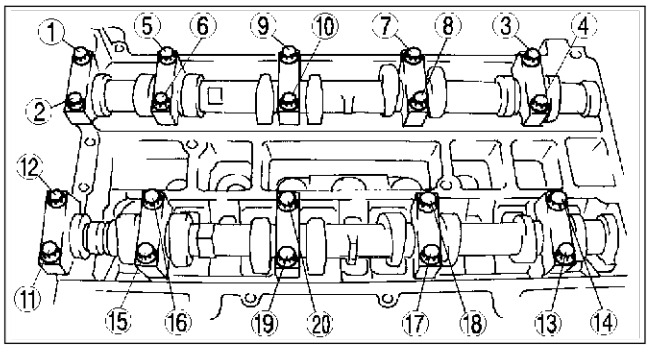

AME2212W008

Cylinder Head Removal Note

1. Loosen the cylinder head bolts in two or three steps in the order shown.

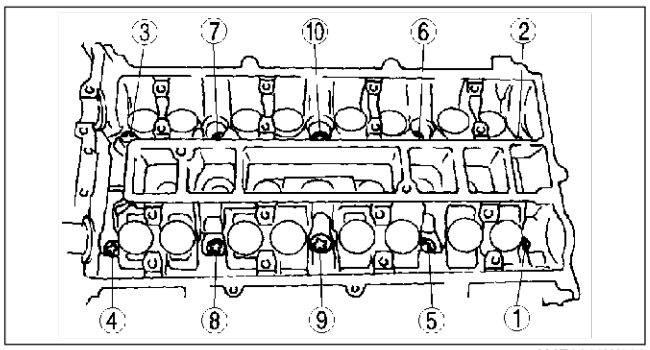

AME2218W003

Cylinder Head Installation Note

1. Measure the length of each cylinder head bolt.
   - Replace any that exceeds maximum length.

   Length L:
   149.0—150.0 mm {5.867—5.905 in}

   Maximum:
   150.5 mm {5.965 in}

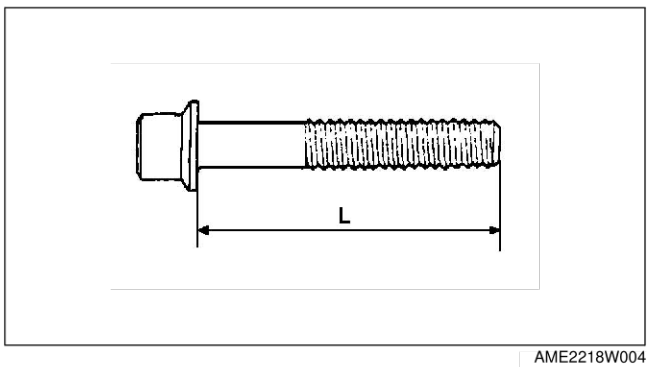

AME2218W004

2. Tighten the cylinder head bolts in the order shown using the following 5 steps.
   (1) Tighten to **5.0 N·m {51.0 kgf·cm, 44.2 in·lbf}**
   (2) Tighten **13—17 N·m {1.4—1.7 kgf·m, 10.0—12.5 ft·lbf}**
   (3) Tighten **44—46 N·m {4.5—4.6 kgf·m, 32.5—33.9 ft·lbf}**
   (4) Tighten **88°—92°**
   (5) Tighten **88°—92°**

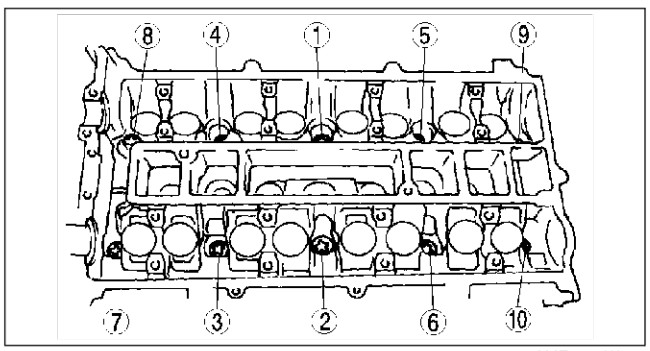

AME2218W005

Camshaft Installation Note

1. Set the cam position of No.1 cylinder at the top dead center (TDC) and install the camshaft.
2. Temporarily tighten the camshaft bearing caps evenly in two or three steps.
3. Tighten the camshaft cap bolts in the order shown with the following two steps.
   (1) Tighten to **5.0—9.0 N·m {51.0—91.7 kgf·cm, 44.6—79.5 in·lbf}**
   (2) Tighten to **14.0—17.0 N·m {1.5—1.7 kgf·m, 10.4—12.5 ft·lbf}**

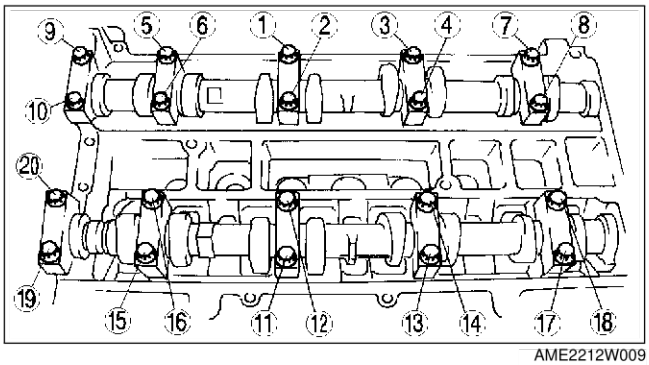

AME2212W009

End Of Se

FRONT OIL SEAL

FRONT OIL SEAL REPLACEMENT

AME242010602W01

1. Disconnect the negative battery cable.
2. Remove the spark plugs. (See G–17 SPARK PLUG REMOVAL/INSTALLATION.)
3. Remove the Cylinder head cover. (See B3–38 Cylinder Head Cover Installation Note.)
4. Remove the drive belt. (See B3–25 DRIVE BELT REPLACEMENT.)
5. Remove the front drive shaft (RH) from the joint shaft. (See M–18 DRIVE SHAFT (L3) REMOVAL/INSTALLATION.)
6. Remove in the order indicated in the table.
7. Install in the reverse order of removal.

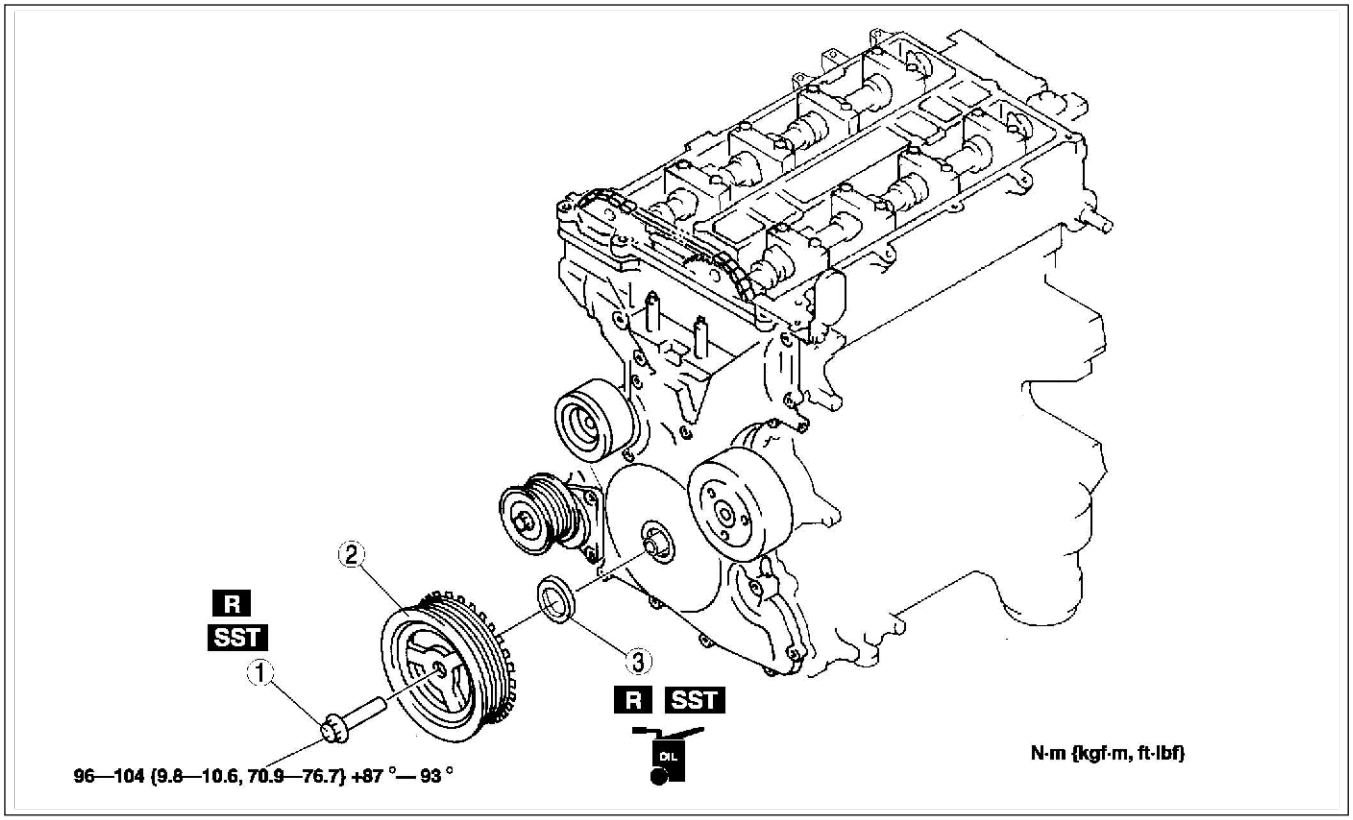

AME2220W001

1	Crankshaft pulley lock bolt (See B3–43 Crankshaft Pulley Lock Bolt Removal Note) (See B3–44 Crankshaft Pulley Lock Bolt Installation Note)

2	Crankshaft pulley
3	Front oil seal (See B3–43 Front Oil Seal Removal Note) (See B3–43 Front Oil Seal Installation Note)

Crankshaft Pulley Lock Bolt Removal Note

1. Remove the cylinder block lower blind plug.
2. Install the **SST**.
3. Turn the crankshaft clockwise until the crankshaft is in No.1 cylinder TDC position (until the balance weight is attached to the **SST**).

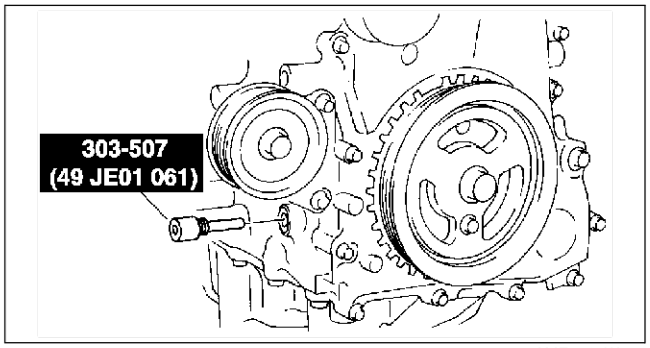

AME2212W004

4. Hold the crankshaft pulley using the **SSTs**.

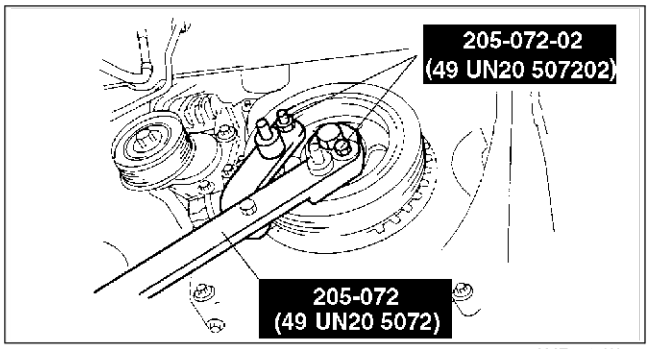

AME2215W002

Front Oil Seal Removal Note

1. Cut the oil seal lip using a razor knife.
2. Remove the oil seal using a screwdriver wrapped with a rag.

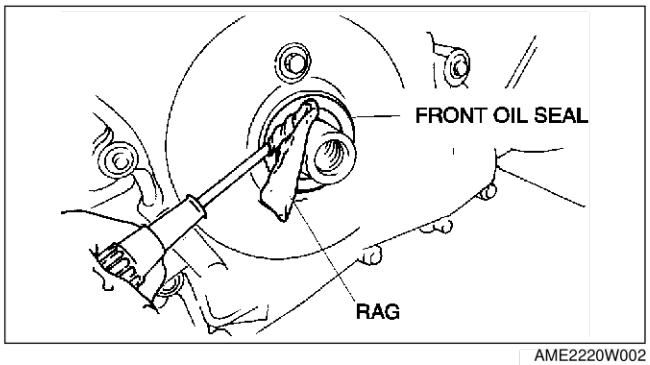

AME2220W002

Front Oil Seal Installation Note

1. Apply clean engine oil to the oil seal lip.
2. Push the oil seal slightly in by hand.
3. Tap the oil seal in evenly using the **SST** and a hammer.

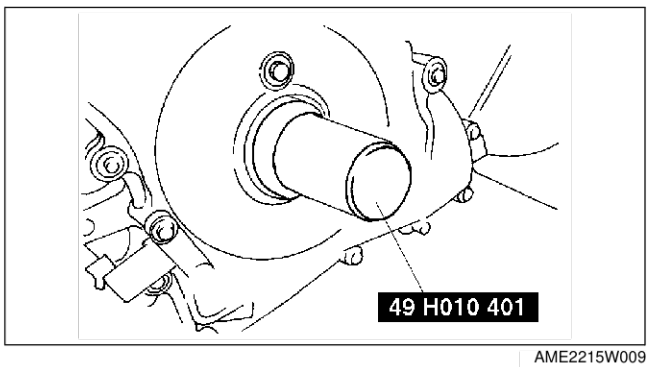

AME2215W009

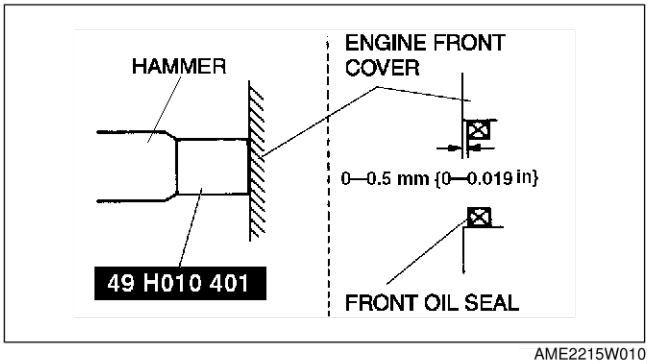

AME2215W010

Crankshaft Pulley Lock Bolt Installation Note

1. Install the **SST** on the camshaft as shown.

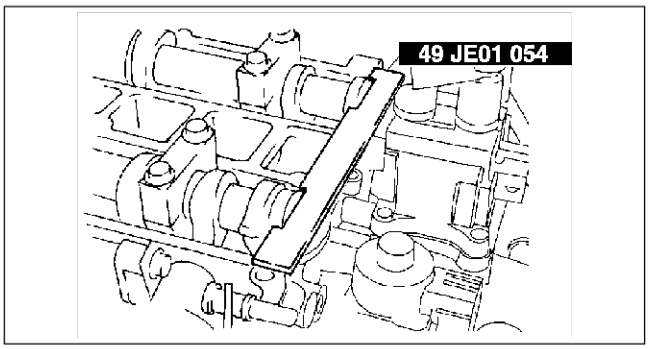

AME2212W010

2. Install the **M6 x 1.0** bolt in by hand.
3. Turn the crankshaft clockwise until the crankshaft is in No.1 cylinder TDC position (until the balance weight is attached to the **SST**).

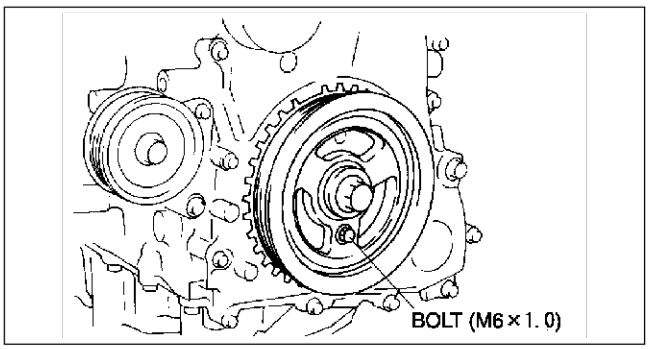

AME2215W013

4. Hold the crankshaft pulley using the **SSTs**.
5. Tighten the crankshaft pulley lock bolt in the order shown using the following two steps.
   (1) Tighten to **96—104 N·m {9.8—10.6 kgf·m, 70.9—76.7 ft·lbf}**
   (2) Tighten **87°—93°**
6. Verify that the crankshaft position sensor is at the TDC position. (See F3–91 CRANKSHAFT POSITION (CKP) SENSOR REMOVAL/INSTALLATION.)
   - If there is not TDC position, adjust the crankshaft position sensor.

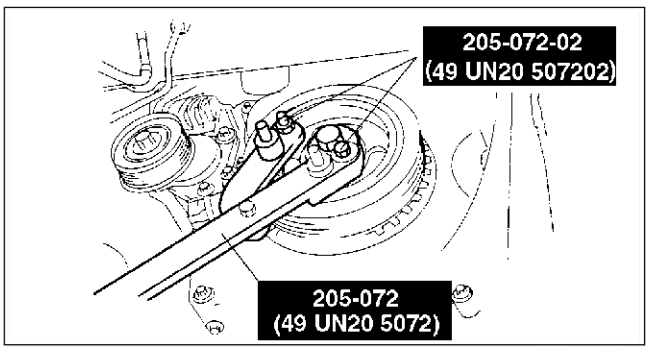

AME2215W002

7. Remove the **M6 x 1.0** bolt.
8. Remove the **SST** from the camshaft.
9. Remove the **SST** from the cylinder block lower blind plug.
10. Rotate the crankshaft clockwise two turns until the TDC position.
    - If not aligned, loosen the crankshaft pulley lock bolt and repeat from Step 1.

11. Install the cylinder block lower blind plug.

    Tightening torque:
    18—22 N·m {1.9—2.2 kgf·m, 13.3—16.2 ft·lbf}

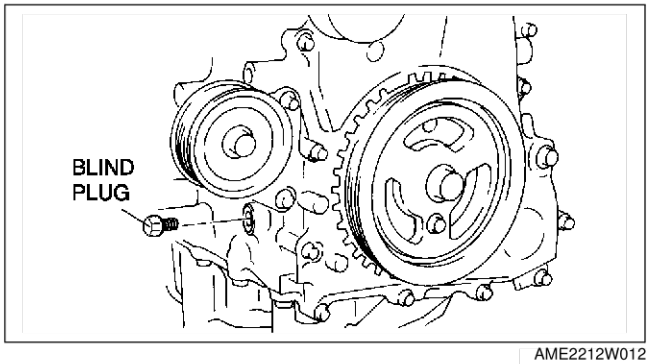

AME2212W012

End Of Sta

REAR OIL SEAL

REAR OIL SEAL REPLACEMENT

AME242211399W01

1. Remove the flywheel. (See H–10 CLUTCH UNIT REMOVAL/INSTALLATION.)
2. Remove in the order indicated in the table.
3. Install in the reverse order of removal.

1	Bolt
2	Rear oil seal (See B3–45 Rear Oil Seal Installation Note)

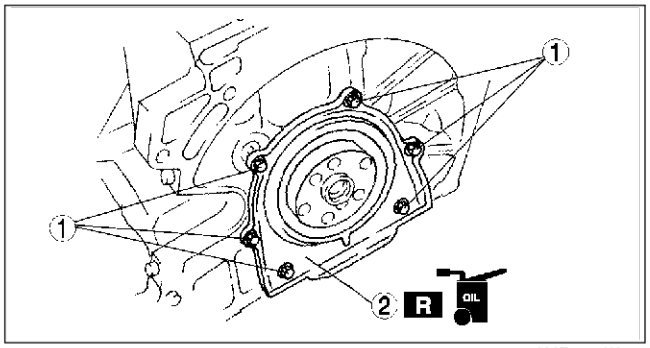

AME2222W001

Rear Oil Seal Installation Note

1. Apply silicone sealant to the mating faces as shown.

   Dot diameter:
   4.0—6.0 mm {0.16—0.23 in}

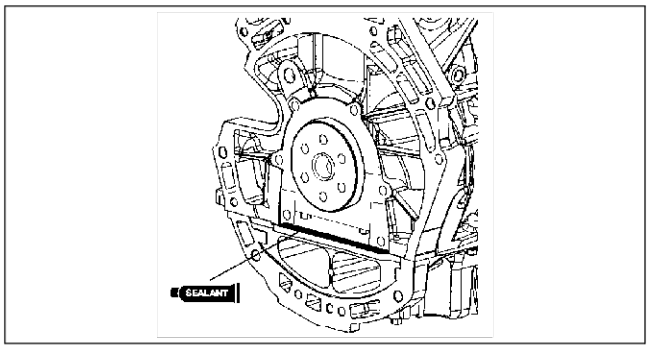

AME2222W002

2. Apply clean engine oil to the new oil seal lip.

3. Install the rear oil seal using the installer as shown.

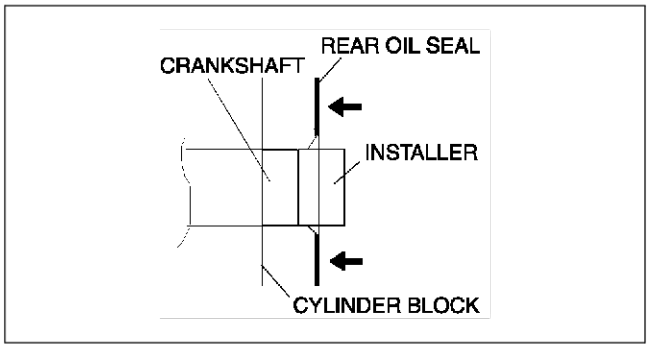

AME2224E326

4. Tighten the rear oil seal bolts in the order as shown.

   Tightening torque:
   8.0—11.5 N·m {81.6—117.2 kgf·m, 70.9—101.7 in·lbf}

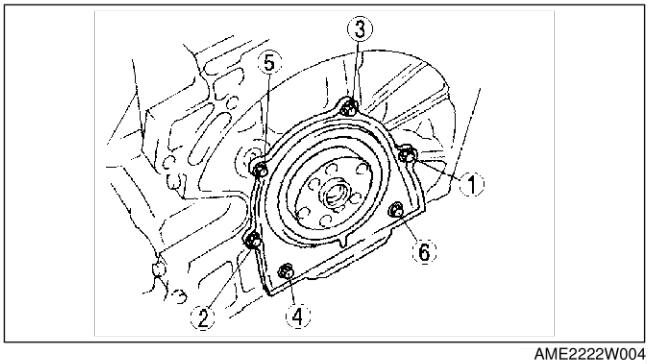

AME2222W004

End Of Sie

ENGINE

ENGINE REMOVAL/INSTALLATION

AME242401001W01

Warning
- **Fuel vapor is hazardous. It can very easily ignite, causing serious injury and damage. Always keep sparks and flames away from fuel.**
- **Fuel line spills and leakage are dangerous. Fuel can ignite and cause serious injures or death and damage. Fuel can also irritate skin and eyes. To prevent this, always complete the "Fuel Line Safety Procedure". (See F3–57 Fuel Line Safety Procedure.)**

1. Remove the battery. (See G–9 BATTERY REMOVAL/INSTALLATION.)
2. Remove the battery tray. (See G–9 BATTERY REMOVAL/INSTALLATION.)
3. Drain the engine coolant. (See E–10 ENGINE COOLANT REPLACEMENT.)
4. Drain the transaxle oil.
5. Remove the P/S oil pump with the oil hose still connected and position the P/S oil pump so that it is out of the way. (SeeN–12 POWER STEERING OIL PUMP (L3) REMOVAL/INSTALLATION)
6. Remove the A/C compressor with the pipes still connected. Position the A/C compressor so that it is out of the way. Use wire or rope to secure.
7. Remove the splash shield (RH).
8. Remove the transverse member.
9. Remove the joint shaft (RH). (See M–18 DRIVE SHAFT (L3) REMOVAL/INSTALLATION.)
10. Disconnect the drive shaft (LH) from the transaxle. (See M–18 DRIVE SHAFT (L3) REMOVAL/INSTALLATION.)
11. Remove the air cleaner, intake air duct, accelerator cable and bracket, and vacuum hose. (See F3–50 INTAKE-AIR SYSTEM REMOVAL/INSTALLATION.)
12. Remove the vacuum hose and heater hose.
13. Remove the plastic fuel hose. (See F3–63 Plastic Fuel Hose Removal Note.) (See F3–64 Plastic Fuel Hose Installation Note.)
14. Disconnect the PCM wiring harness (center connector) at the PCM.(See F3–81 PCM REMOVAL/INSTALLATION)

    Note
    - Do not disconnect the engine side of this harness.

15. Remove the release cylinder and control cable. (See J1–4 MANUAL TRANSAXLE REMOVAL/INSTALLATION.)
16. Remove the front pipe. (See F3–73 EXHAUST SYSTEM REMOVAL/INSTALLATION.)
17. Remove in the order indicated in the table.
18. Install in the reverse order of removal.
19. Start the engine and:
    - Inspect for the engine oil, engine coolant, transaxle oil and fuel leakage.
    - Verify the ignition timing, idle speed and idle mixture. (See F3–49 IGNITION TIMING INSPECTION.) (See F3-49 IDLE SPEED INSPECTION) (SeeF3–49 IDLE MIXTURE INSPECTION.)
20. Perform a road test.

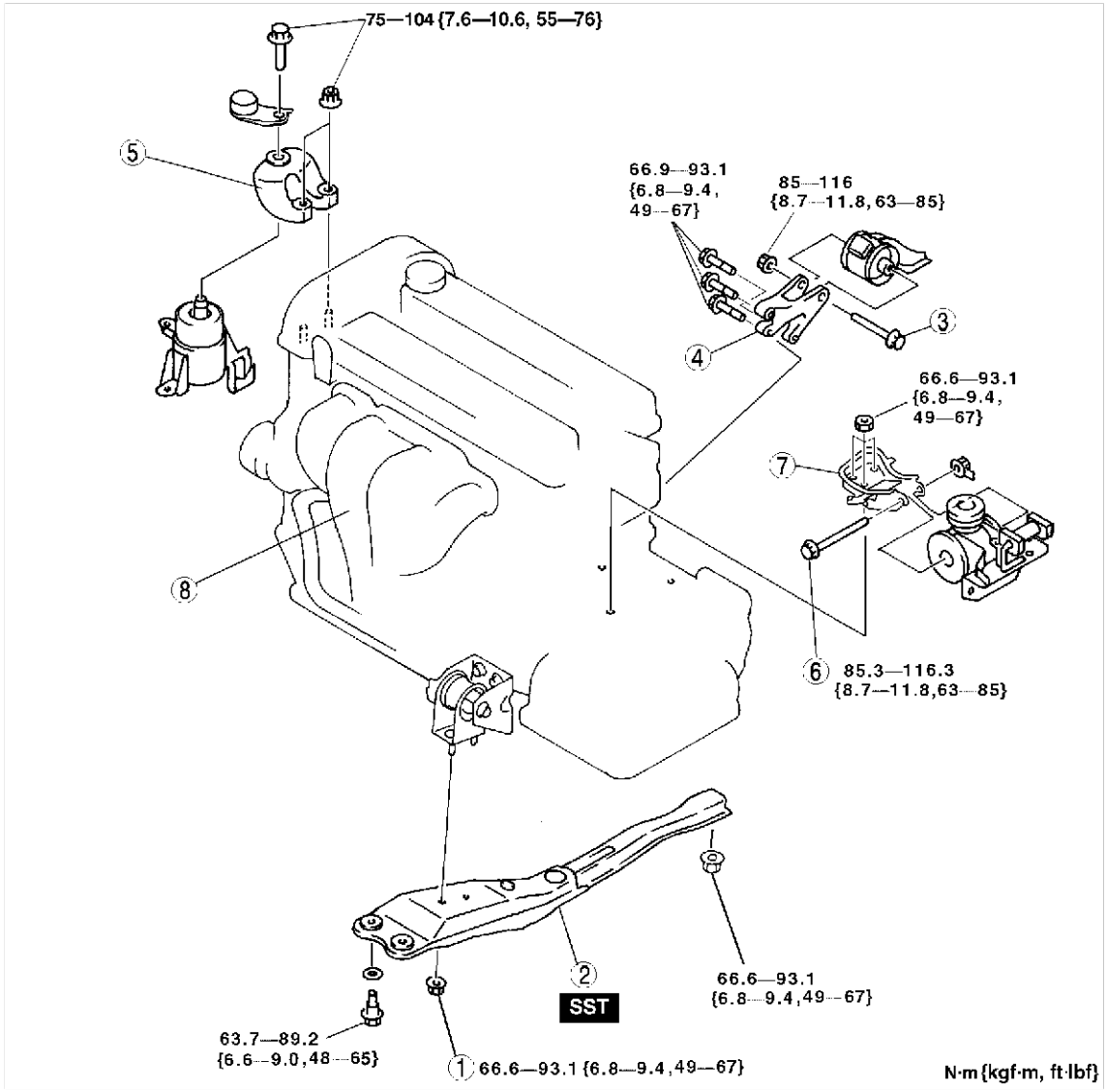

AME2413W001

1	No.2 Engine mount nut
2	Engine mount member (See B3–48 Engine Mount Member Removal Note) (See B3–50 Engine Mount Member Installation Note)
3	No.2 engine mount through bolt
4	No.1 engine mount bracket (See B3–50 No.1 Engine Mount Bracket Installation Note)
5	No.3 engine mount bracket (See B3–48 No.3, No.4 Engine Mount Bracket Removal Note) (See B3–49 No. 3 Engine Mount Bracket Installation Note)

6	No.4 engine mount through bolt
7	No.4 engine mount bracket (See B3–48 No.3, No.4 Engine Mount Bracket Removal Note) (See B3–49 No.4 Engine Mount Bracket Installation Note)
8	Engine, transaxle

Engine Mount Member Removal Note

1. Suspend the engine using the **SSTs**.

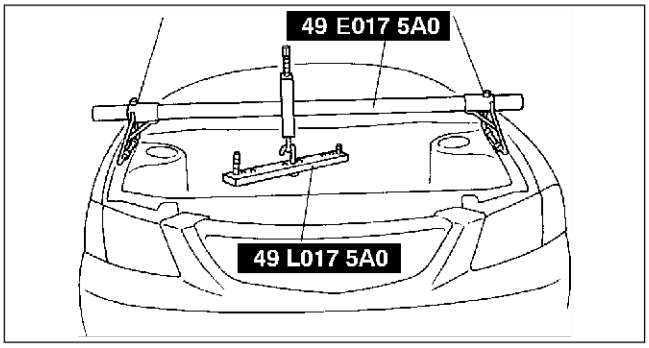

AMJ2224W002

2. Remove No.2 engine mount nut A.
3. Remove the engine mount member.

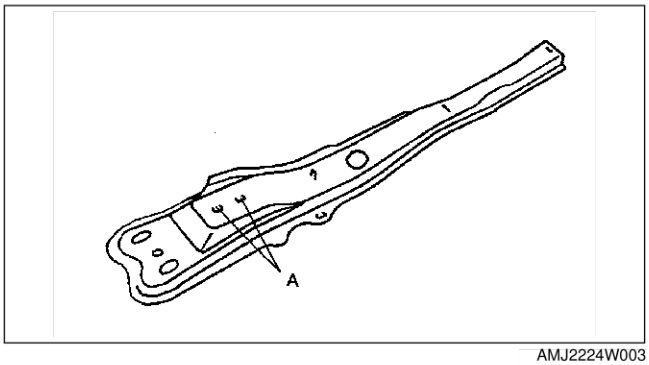

AMJ2224W003

No.3, No.4 Engine Mount Bracket Removal Note

1. Secure the engine and the transaxle using an engine jack and attachment as shown.

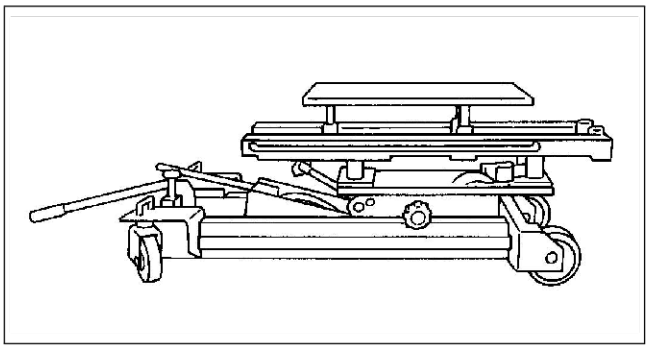

AME2218W001

2. Remove the **SSTs**.

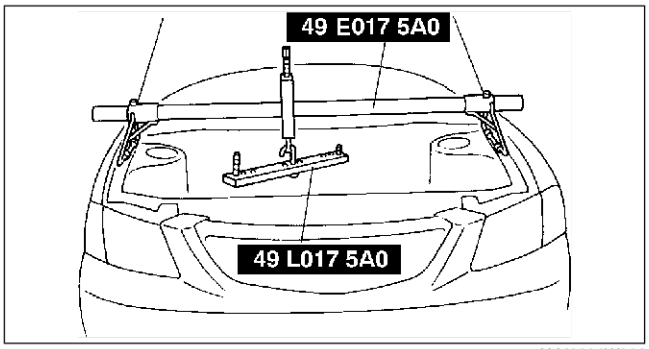

AMJ2224W002

No.4 Engine Mount Bracket Installation Note

1. Secure the engine and the transaxle using an engine jack and attachment as shown.
2. Install No.4 engine mount bracket.
3. Install No.4 engine mount through bolts.

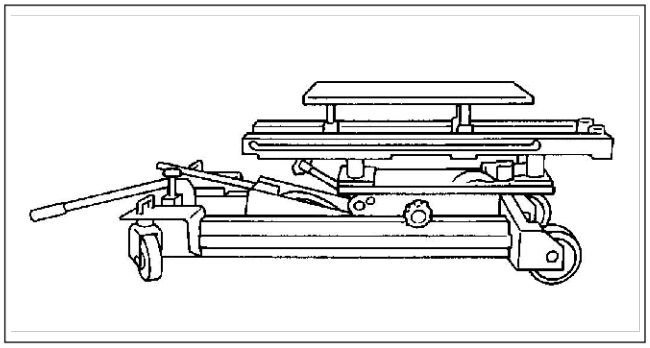

AME2218W001

4. Tighten No.4 engine mount bolt and nut in the order indicated in the figure.

   Tightening torque
   66.6—93.1 N·m
   {6.8—9.4 kgf·m, 49—67 ft·lbf}

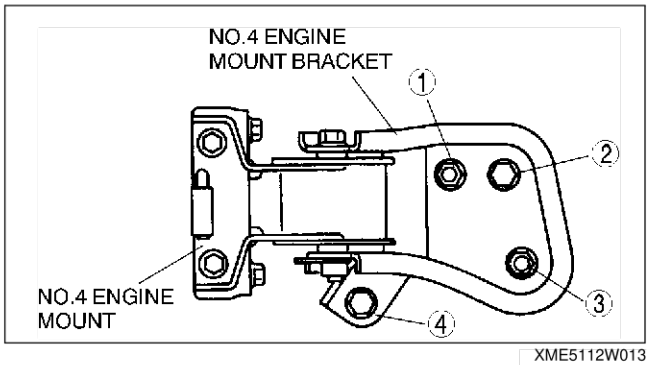

XME5112W013

No. 3 Engine Mount Bracket Installation Note

1. Tighten No.3 engine mount bracket stud bolt.

   Tightening torque:
   7.0—13 N·m {71.4—132.5 kgf·cm, 62.0—115.0 in·lbf}

2. Install No.3 engine mount.

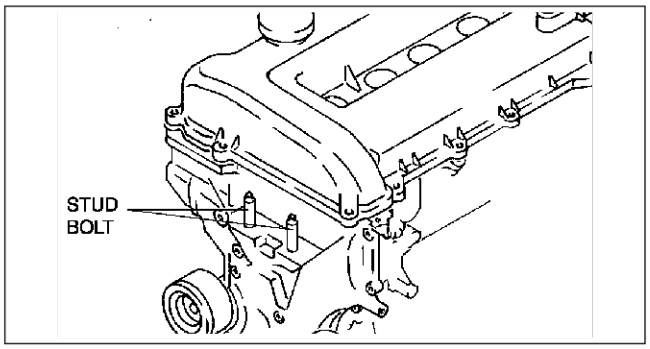

AME2215W011

3. Tighten No.3 engine mount bolts in the order indicated in the figure.

   Tightening torque:
   75—104 N·m {7.6—10.6 kgf·m, 55—76 ft·lbf}

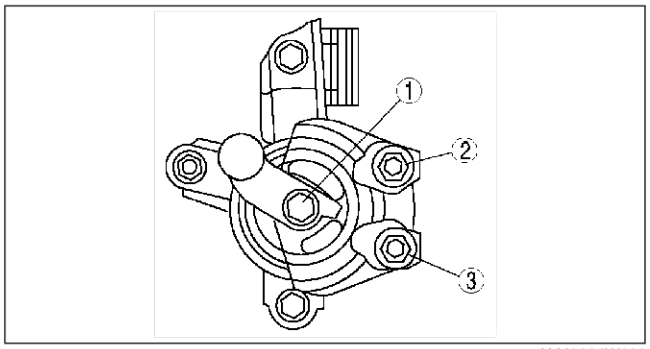

AMJ2224W009

4. Suspend the engine using the **SSTs**.
5. Remove the engine jack and attachment under the engine, transaxle.

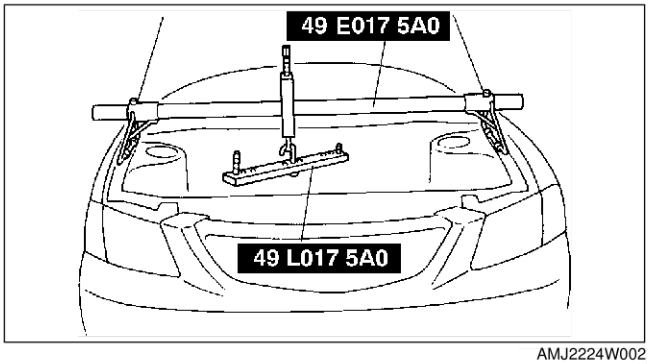

AMJ2224W002

No.1 Engine Mount Bracket Installation Note

1. Install No.1 engine mount bracket.
2. Tighten No.1 engine mount through bolts.

Tightening torque:
85—116 N·m {8.7—11.8 kgf·m, 63—85 ft·lbf}

Engine Mount Member Installation Note

1. Tighten the engine mount member bolt & nut.

Tightening torque:
Bolt: 63.7—89.2 N·m {6.6—9.0 kgf·m, 48—65 ft·lbf}
Nut: 66.6—93.1 N·m {6.8—9.4 kgf·m, 49—67 ft·lbf}

2. Tighten No.2 engine mount nut A.

Tightening torque:
66.6—93.1 N·m {6.8—9.4 kgf·m, 49—67 ft·lbf}

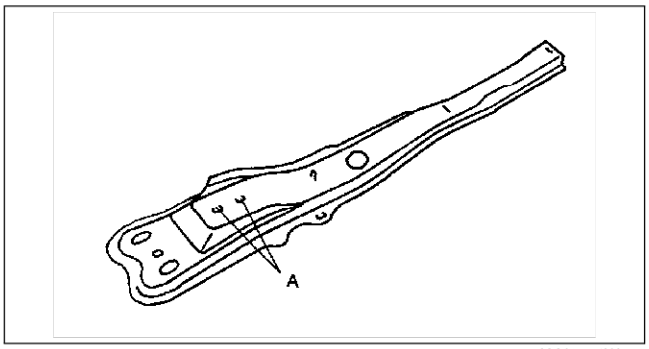

AMJ2224W003

3. Remove the **SSTs**.

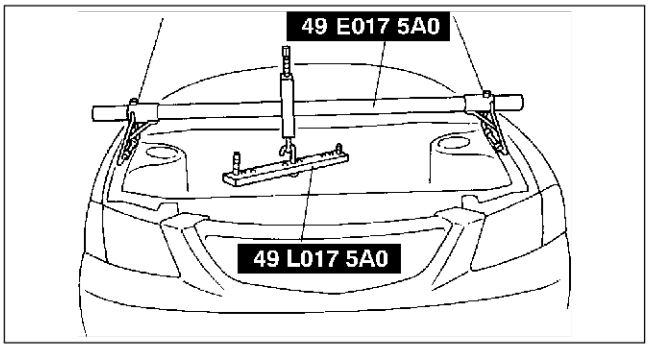

AMJ2224W002

End Of Sie

ENGINE DISASSEMBLY/ASSEMBLY

AME242401001W02

1. Disconnect the engine and transaxle. (See J1–4 MANUAL TRANSAXLE REMOVAL/INSTALLATION.)
2. Remove the Clutch unit. (See H–10 CLUTCH UNIT REMOVAL/INSTALLATION.)
3. Remove the intake-air system. (See F3–50 INTAKE-AIR SYSTEM REMOVAL/INSTALLATION.)
4. Remove the exhaust system. (See F3–73 EXHAUST SYSTEM REMOVAL/INSTALLATION.)
5. Remove the generator. (See G–11 GENERATOR REMOVAL/INSTALLATION.)
6. Remove the ignition coils. (See G–15 IGNITION COIL REMOVAL/INSTALLATION.)
7. Remove the Crankshaft position sensor. (See F3–91 CRANKSHAFT POSITION (CKP) SENSOR REMOVAL/INSTALLATION.)
8. No.2 engine mount bracket.
9. Assemble in the reverse order of disassembly.

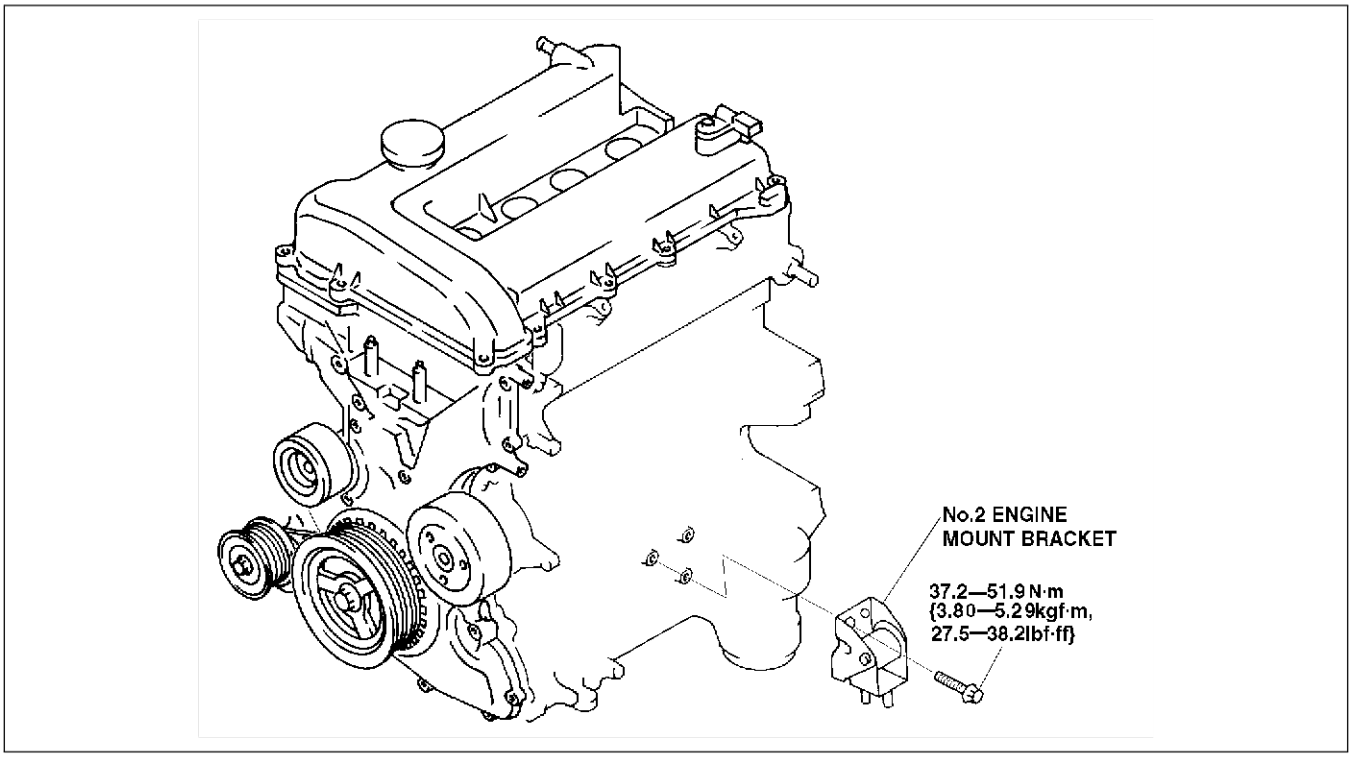

AME2424W006

End Of Sta

ENGINE [MZR-CD (RF Turbo)]

FEATURES

OUTLINE B4-2
- OUTLINE OF CONSTRUCTION B4-2
- FEATURES B4-2
- ENGINE PERFORMANCE CURVE B4-3
- SPECIFICATIONS B4-4
- STRUCTURAL VIEW B4-4

ENGINE B4-5
- OIL PAN UPPER BLOCK B4-5
- CRANKSHAFT, MAIN BEARING B4-6
- CRANKSHAFT PULLEY B4-7
- PISTON B4-8
- CONNECTING ROD, CONNECTING ROD BEARING B4-9
- DRIVE BELT B4-10
- ENGINE COVER B4-10

SERVICE

LOCATION INDEX B4-11
- LOCATION INDEX B4-11

DRIVE BELT B4-12
- DRIVE BELT INSPECTION B4-12
- DRIVE BELT REPLACEMENT B4-12
- DRIVE BELT AUTO TENSIONER INSPECTION B4-13

VALVE CLEARANCE B4-13
- VALVE CLEARANCE INSPECTION B4-13
- VALVE CLEARANCE ADJUSTMENT B4-14

COMPRESSION PRESSURE B4-16
- COMPRESSION INSPECTION B4-16

TIMING BELT B4-17
- TIMING BELT REMOVAL/INSTALLATION B4-17

CYLINDER HEAD GASKET B4-22
- CYLINDER HEAD GASKET REPLACEMENT B4-22

FRONT OIL SEAL B4-30
- FRONT OIL SEAL REPLACEMENT B4-30

REAR OIL SEAL B4-32
- REAR OIL SEAL REPLACEMENT B4-32

ENGINE B4-33
- ENGINE REMOVAL/INSTALLATION B4-33
- ENGINE DISASSEMBLY/ASSEMBLY B4-38

OUTLINE

OUTLINE OF CONSTRUCTION

AME250202000W05

- A new MPV (LW) MZR-CD (RF Turbo) engine model has been adopted for European specs.
- The construction and operation of the new MPV (LW) MZR-CD (RF Turbo) engine is the same as that of the current 323 (BJ) RF Turbo engine model, except for the following features. (See Mazda 323 Workshop Manual Supplement 1633-10-98G.)

End Of Sie

FEATURES

AME250202000W06

Improved engine performance

- Coated piston have been adopted.

Reduced engine noise and vibration

- An aluminium alloy oil pan upper block has been adopted.
- An eight counter weight crankshaft has been adopted.
- A crankshaft pulley cover has been adopted.
- An engine cover with insulator has been adopted.

Improved serviceability

- A serpentine type drive belt has been adopted.
- The drive belt tension is adjusted automatically with an auto-tensioner has been adopted.

Improved design

- An engine cover has been adopted.

End Of Sie

ENGINE PERFORMANCE CURVE

AME250202000W07

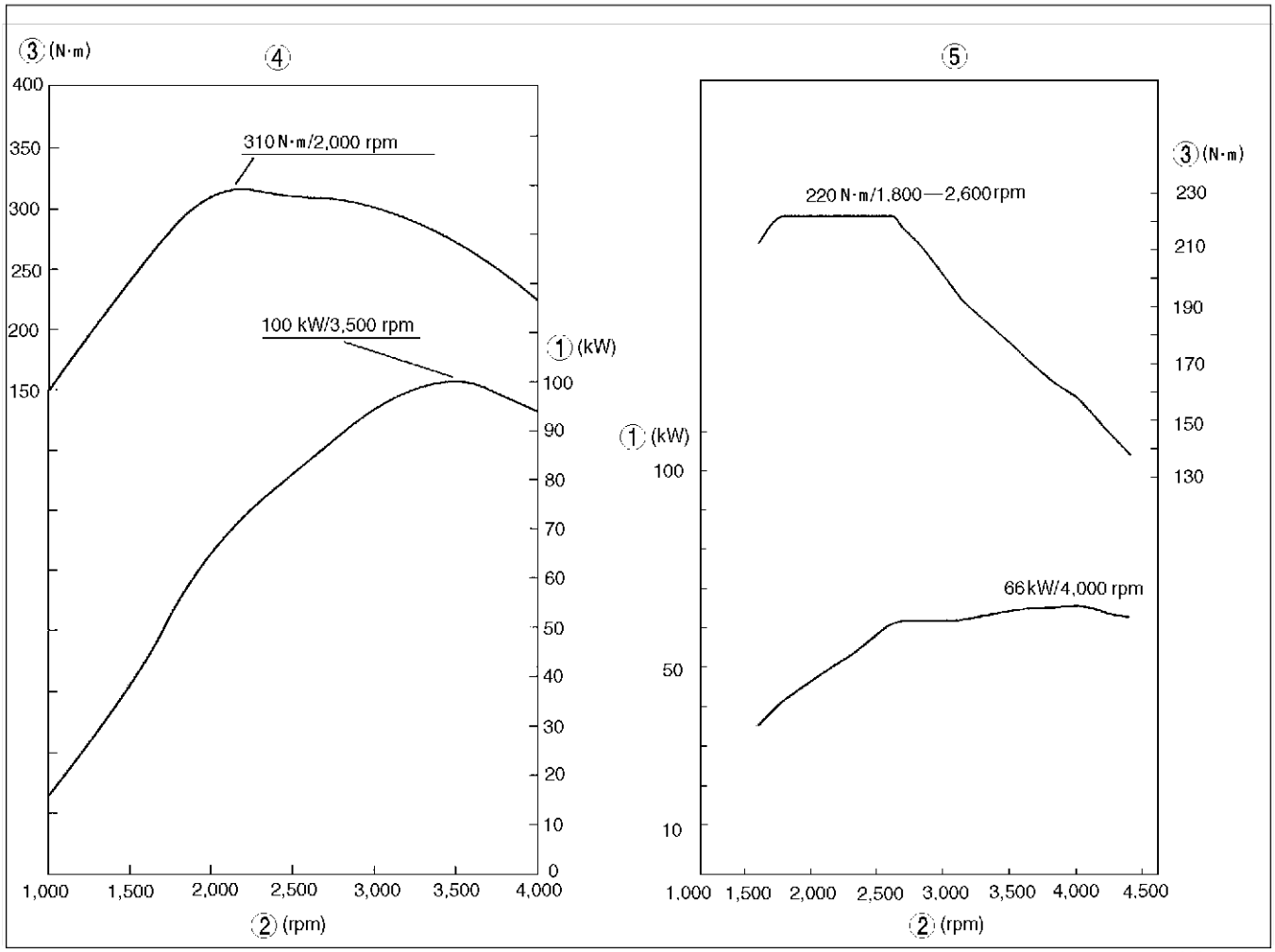

AME2202N002

1	Output
2	Engine speed
3	Torque
4	New MPV (LW) MZR–CD (RF Turbo)
5	Current 323 (BJ) RF Turbo

End Of Sta

SPECIFICATIONS

AME250202000W08

Item			Specifications	
			New MPV (LW)	Current 323 (BJ)
			MZR-CD (RF Turbo)	RF Turbo
Type			Diesel, 4-cycle	
Cylinder arrangement and number			In-line, 4-cylinder	
Combustion chamber			Direct injection	
Valve system			OHC, belt-driven, 16-valve	
Displacement (ml {cc, cu in})			1,998 {1.998, 122}	
Bore × stroke (mm {in})			86.0 × 86.0 {3.39 × 3.39}	
Compression ratio			18.4	18.8
Compression pressure (kPa {kgf/cm^2, psi} [rpm])			3,500 {35.7, 507.7} [250]	2,893 {29.5, 419} [260]
Valve timing	IN	Open BTDC (°)	6	
		Close ABDC (°)	30	
	EX	Open BBDC (°)	41	
		Close ATDC (°)	8	
Valve clearance	IN	(mm {in})	0.12 {0.005}—0.18 {0.007} [Engine cold]	
	EX	(mm {in})	0.32 {0.013}—0.38 {0.014} [Engine cold]	

Bold frames: New specifications

End Of Sie

STRUCTURAL VIEW

AME250202000W09

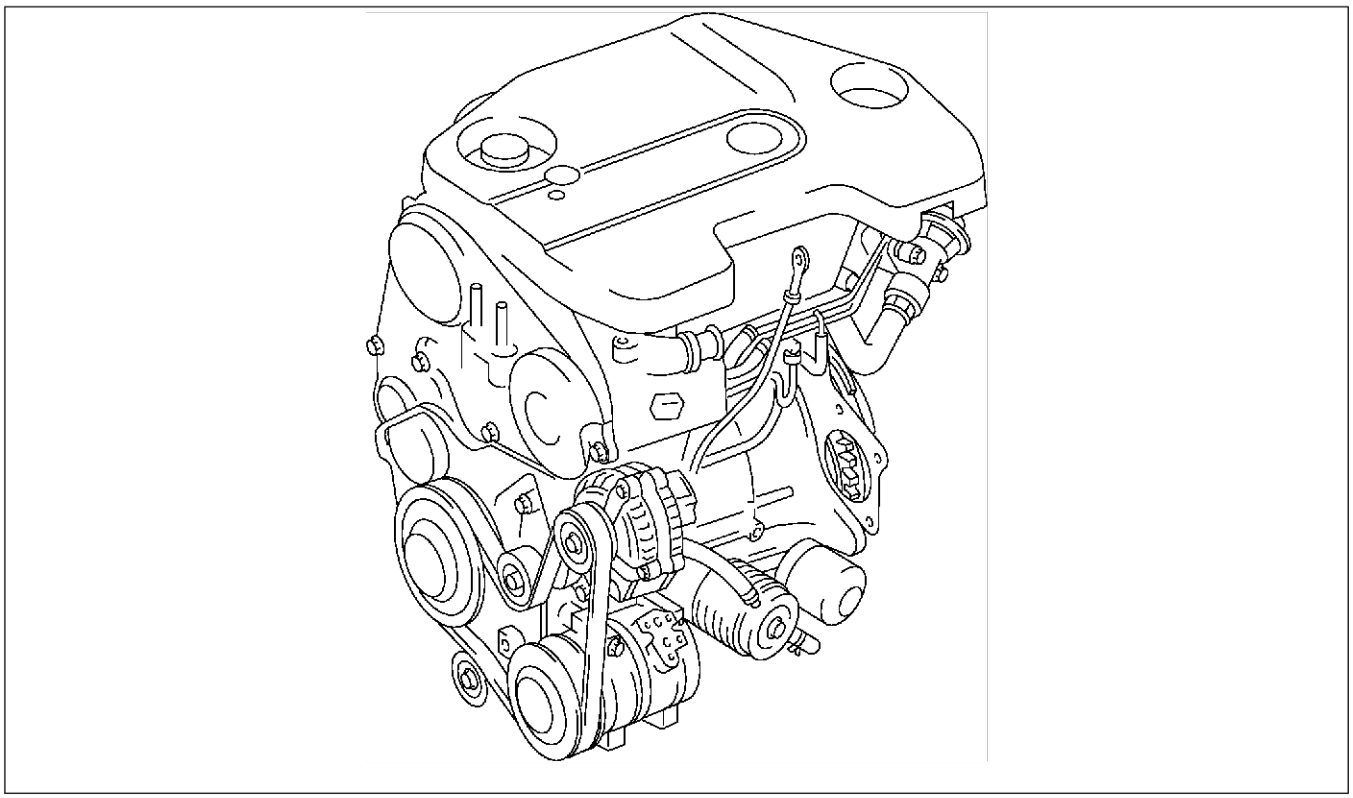

AME2202N002

End Of Sie

ENGINE

OIL PAN UPPER BLOCK

AME252411010W02

- To reduce engine noise from vibration of the crankshaft and cylinder block, as well as for weight reduction, an aluminum alloy oil pan upper block has been adopted.
- Slight shudder in the skirt area and fore/aft vibration of the main bearings have been reduced by the consolidation of the oil pan upper block and main bearing caps, and the cylinder block skirt. Rigidity of the engine and transmission joint has also increased by the consolidation of the transmission and oil pan block, reducing vibration of the overall power plant.

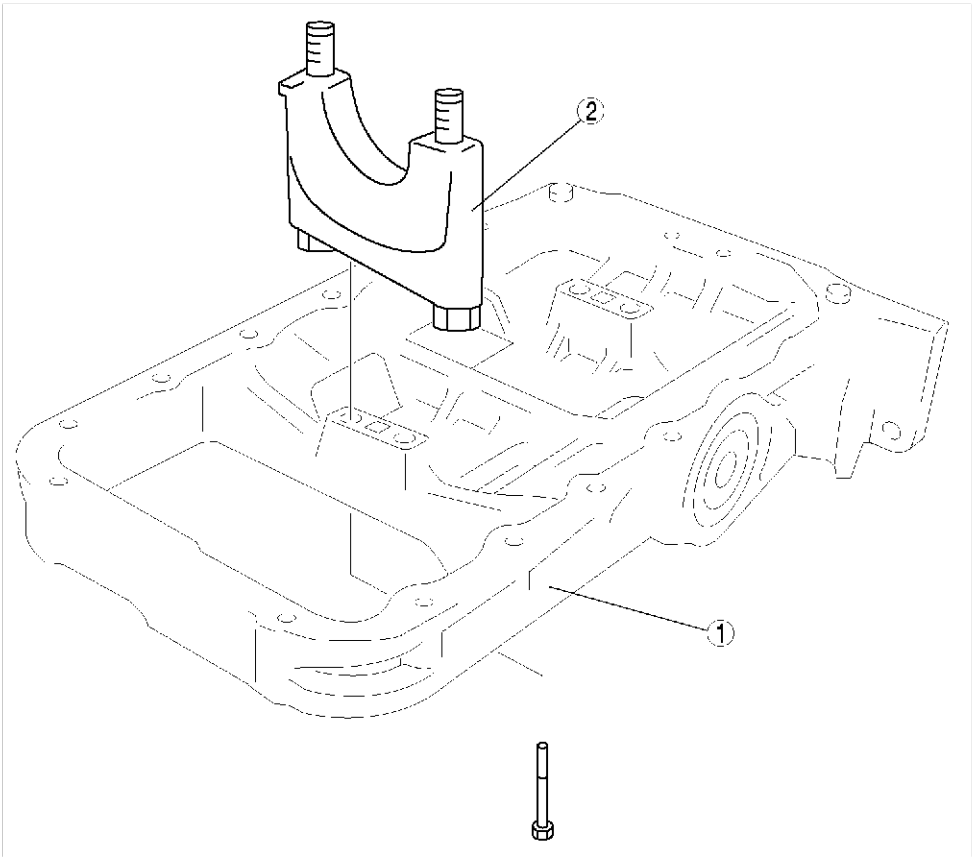

AME2524N009

1	Oil pan upper block
2	Crankshaft main bearing

End Of Ste

CRANKSHAFT, MAIN BEARING

AME252411301W01

Structure

- A five axle-hole, 8 counter weight steel crankshaft has been adopted.
- An oil line for supplying oil to each journal is provided in the crankshaft. Crank pins and fillets on both sides of the journal are rolled to bear heavy loads.
- Upper and lower main bearings are made of aluminum alloy and thrust bearings are used at the No.3 journal. The upper main bearing has oil grooves and oil holes.

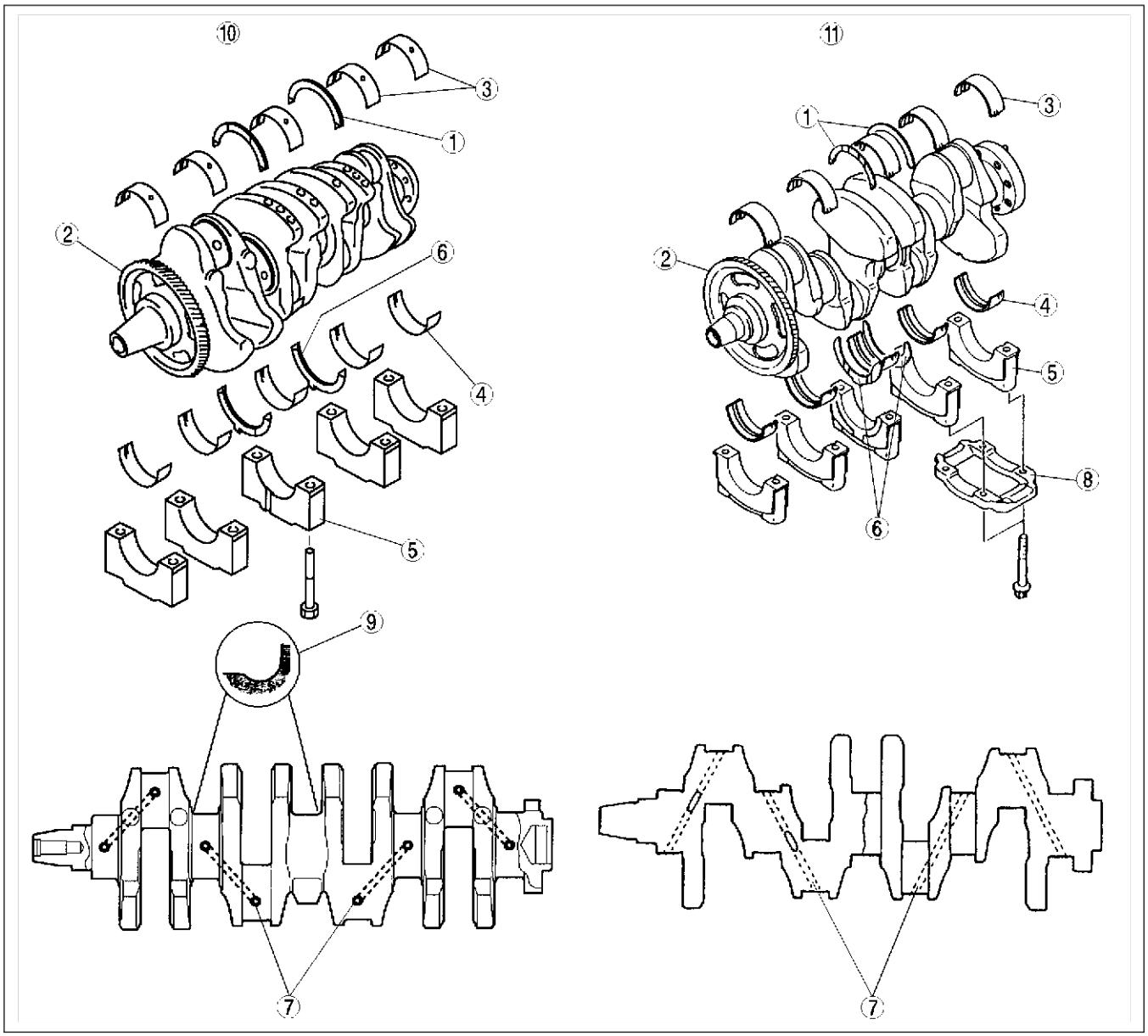

AME2524N004

1	Upper thrust bearing
2	Oil pump drive gear
3	Upper main bearing
4	Lower main bearing
5	Main bearing cap
6	Lower thrust bearing

7	Oil passage
8	Bearing beam
9	Lolled
10	New MPV (LW) MZR–CD (RF Turbo)
11	Current 323 (BJ) RF Turbo

End Of Se

CRANKSHAFT PULLEY

AME252411371W01

Structure

- A torsional damper pulley is used for the crankshaft pulley to reduce torsional vibration noise.
- The pulley installation area has a pulley cover for reduction of engine noise.

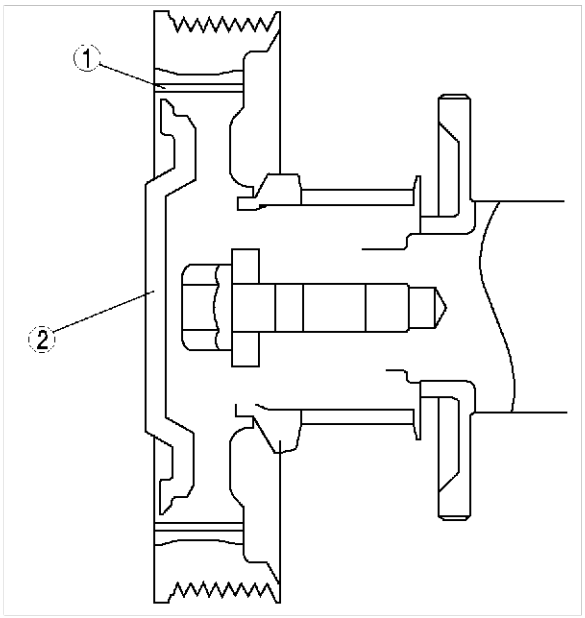

AME2524N001

1	Torsional damper
2	Pulley cover

End Of Ste

PISTON

AME252411010W01

Structure

- In accordance with the adoption of the common rail injection system, the piston head shape (combustion chamber) has been changed.
- A reduction in friction has been achieved by the coating of the skirt area together with a compression rating setting of 18.4.
- To realize high combustion efficiency, the diffusion area of the hotspot at combustion has been expanded by the change in the shape of the combustion chamber and the spray pattern of fuel injectors. Exhaust emission and combustion noise have been reduced through smooth and uniform combustion.

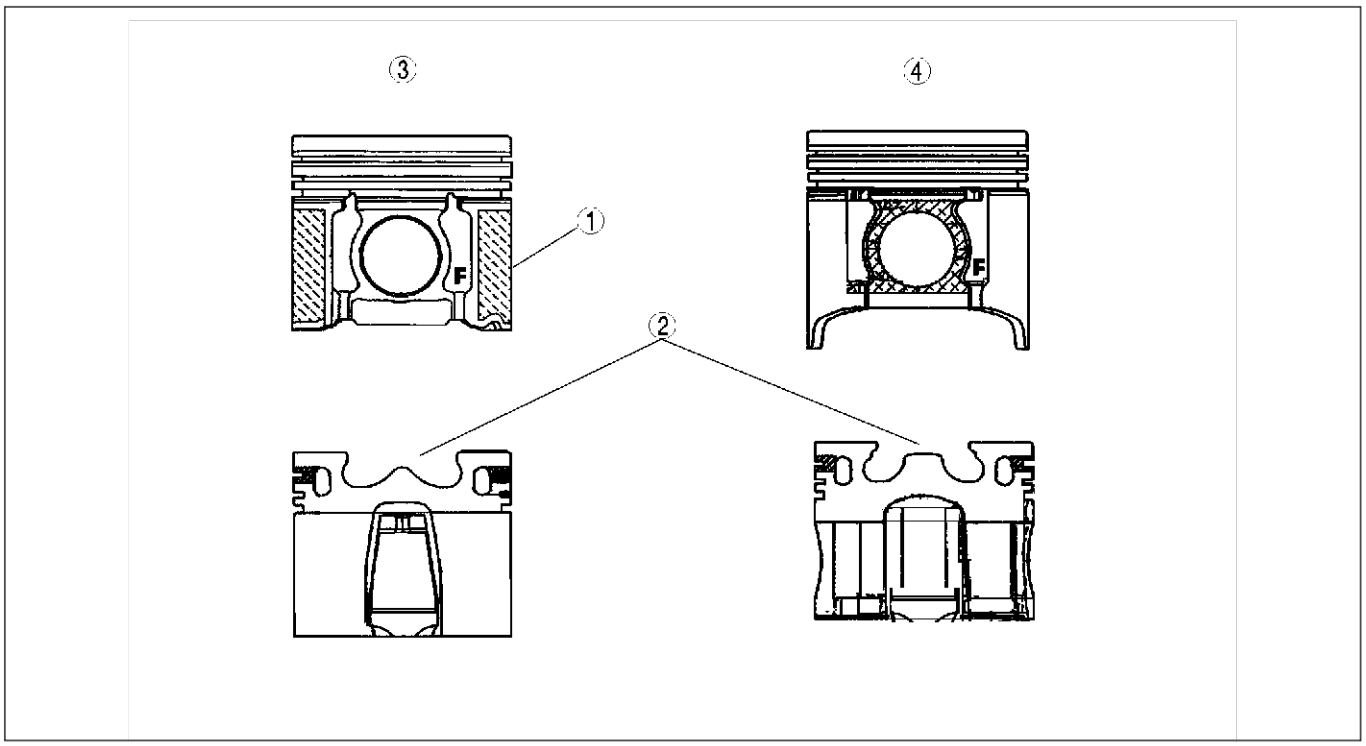

AMJ2224N010

1	Coating
2	Combustion chamber

3	New MPV (LW) MZR–CD (RF Turbo)
4	Current 323 (BJ) RF Turbo

End Of Sie

CONNECTING ROD, CONNECTING ROD BEARING

AME252411211W01

Structure

- Connecting rods are made of carbon steel.
- Dowel pins are used to position the rod cap to the connecting rod.
- Connecting rod caps are secured with plastic region bolts.

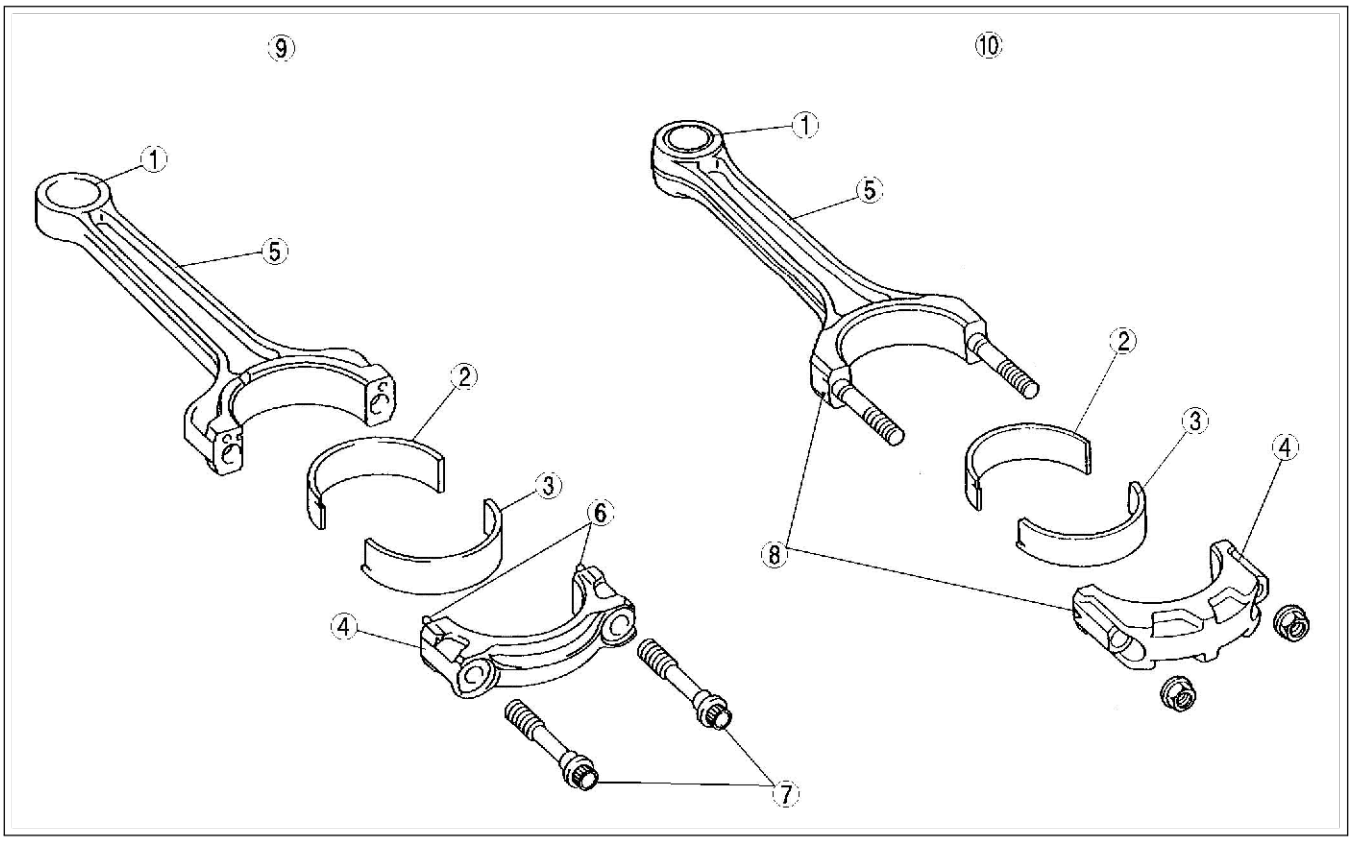

AME2524N006

1	Bush
2	Connecting rod upper bearing
3	Connecting rod lower bearing
4	Connecting rod cap
5	Connecting rod

6	Dowel pin
7	Connecting rod cap bolt (Plastic region bolt)
8	Alignment marks
9	New MPV (LW) MZR–CD (RF Turbo)
10	Current 323 (BJ) RF Turbo

End Of Sta

DRIVE BELT

AME252415800W01

Structure

- The serpentine type drive belt uses a V-ribbed belt to drive the supplemental units. This shortens the length of the engine and makes it easier to service.
- A front drive belt auto tensioner with an embedded coil spring has been adopted for drive belt tension. The tensioner pulley automatically maintains drive belt tension.

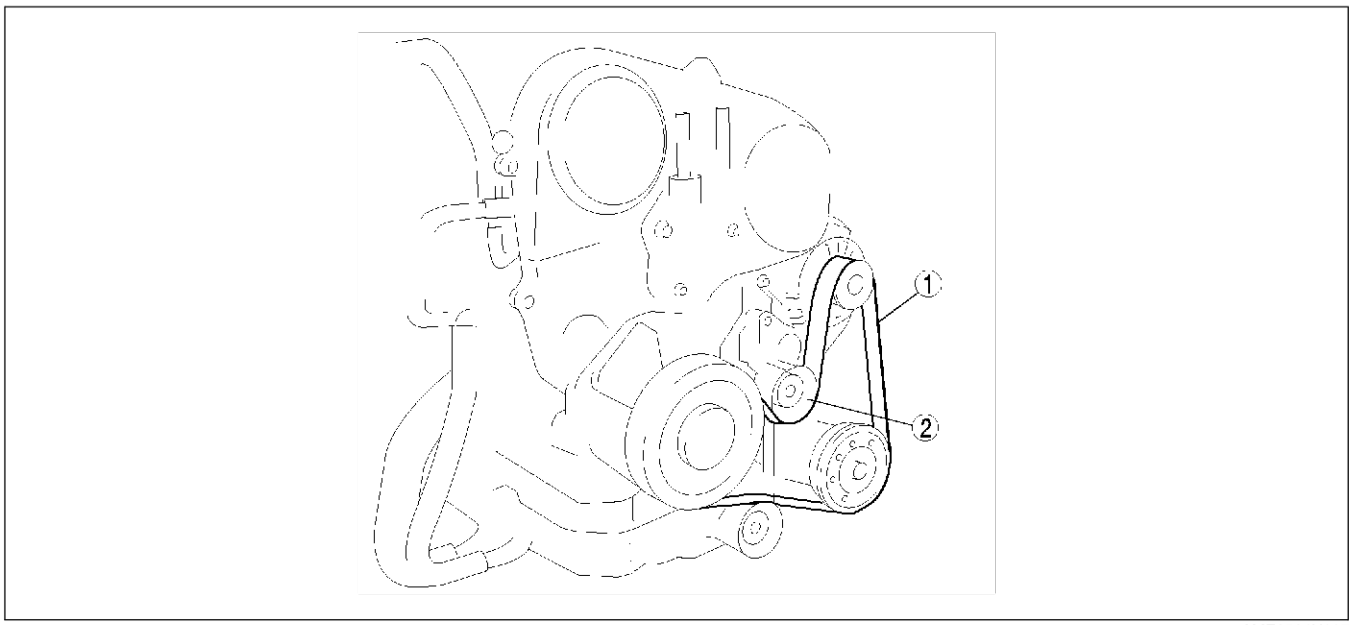

AME2524N007

1	Drive belt

2	Auto tensioner

End Of Sie

ENGINE COVER

AME252415800W02

Structure

- Appearance has been improved with the establishment of an engine cover.
- An insulator has been attached to the back of the engine cover for reduction of engine noise.

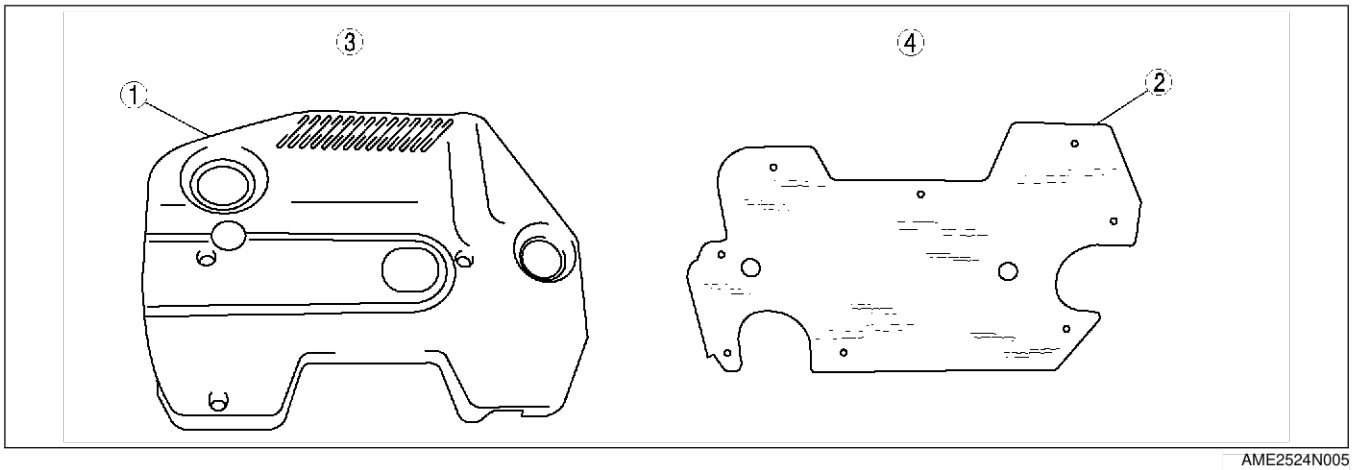

AME2524N005

1	Engine cover
2	Insulator

3	Front
4	Engine cover back

End Of Sie

LOCATION INDEX

LOCATION INDEX

AME250001002W01

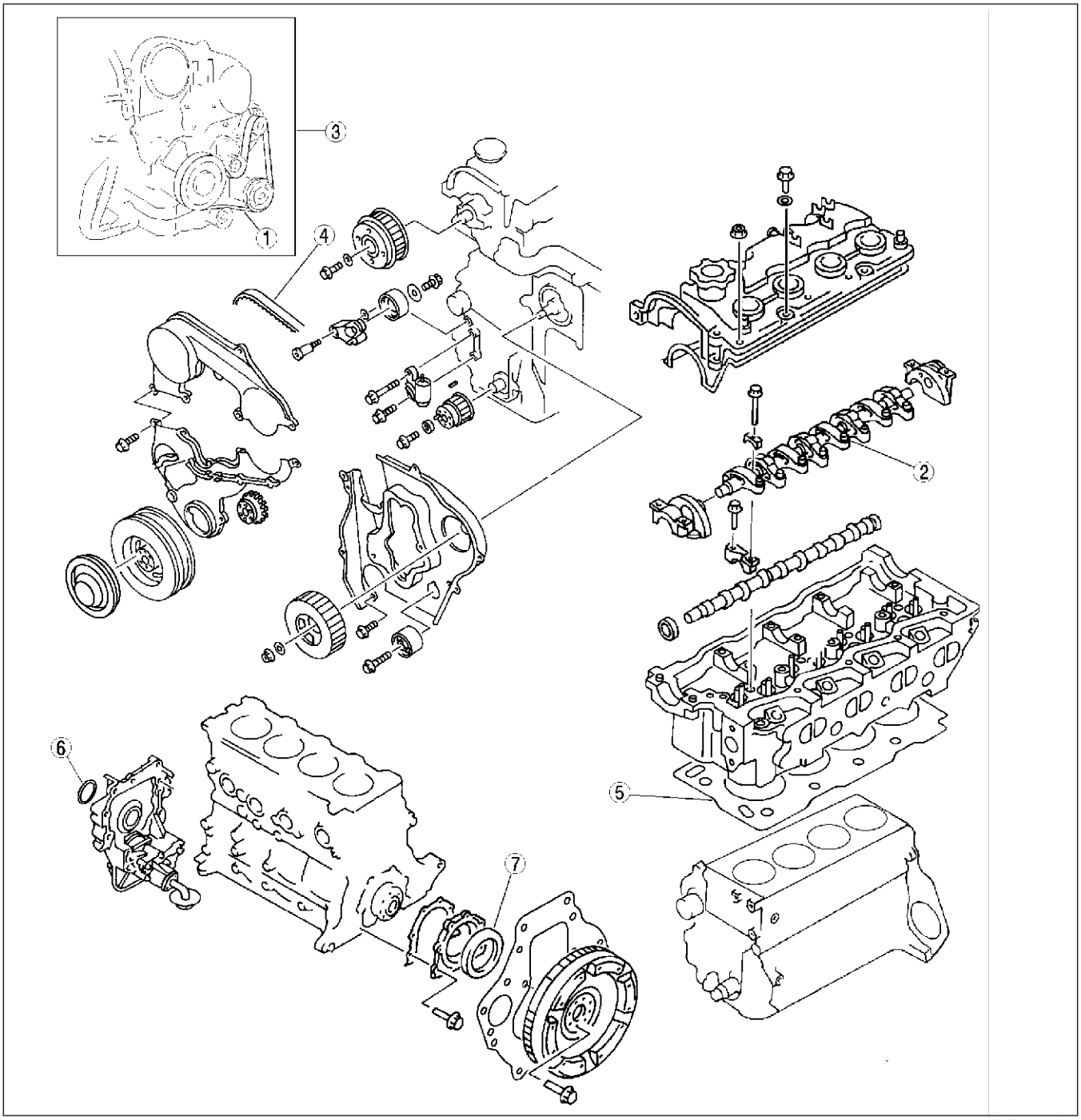

AME2524W003

1	Drive belt (See B4–12 DRIVE BELT INSPECTION) (See B4–12 DRIVE BELT REPLACEMENT) (See B4–13 DRIVE BELT AUTO TENSIONER INSPECTION)
2	Rocker arm (See B4–13 VALVE CLEARANCE INSPECTION), (See B3–27 VALVE CLEARANCE ADJUSTMENT)
3	Engine (See B4–16 COMPRESSION INSPECTION) (See B4–33 ENGINE REMOVAL/INSTALLATION) (See B4–38 ENGINE DISASSEMBLY/ASSEMBLY)

4	Timing Belt (See B4–17 TIMING BELT REMOVAL/INSTALLATION)
5	Cylinder head gasket (See B4–22 CYLINDER HEAD GASKET REPLACEMENT)
6	Front oil seal (See B4–30 FRONT OIL SEAL REPLACEMENT)
7	Rear oil seal (See B4–32 REAR OIL SEAL REPLACEMENT)

DRIVE BELT

DRIVE BELT INSPECTION

AME251015800W03

Note
- Front and water pump drive belt deflection/tension inspection is not necessary because of the use of the front drive belt auto tensioner.

Front Drive Belt

1. Verify that the drive belt auto tensioner indicator mark does not exceeds the limit.
   - If it exceeds the limit, replace the drive belt. (See B4–12 DRIVE BELT REPLACEMENT.)

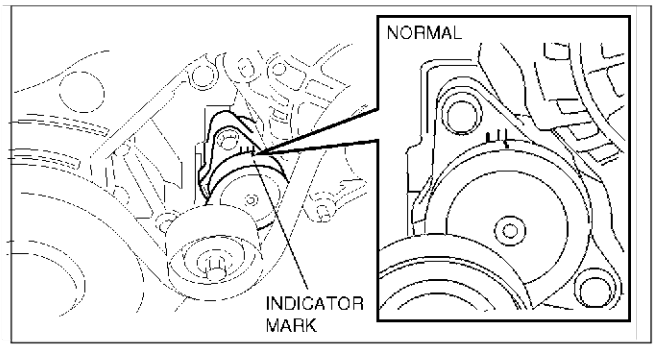

AME2510W001

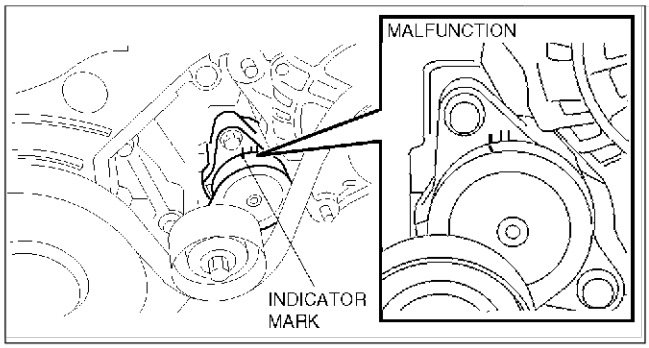

AME2510W005

End Of Sie

DRIVE BELT REPLACEMENT

AME251015800W04

1. Remove the splash shield (RH).
2. Turn the center of the tensioner pulley clockwise to release tension to the drive belt.
3. Remove the drive belt.
4. Reinstall the drive belt or install a new drive belt.
5. Verify that the drive belt auto tensioner indicator mark does not exceed the limit. (See B4–12 DRIVE BELT INSPECTION.)
   - If it exceeds the limit, replace the drive belt.
6. Install the splash shield (RH).

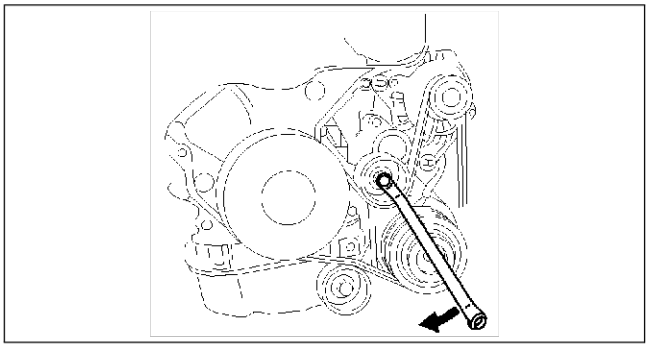

AMJ2210W003

End Of Sie

DRIVE BELT AUTO TENSIONER INSPECTION

AME251015980W02

1. Remove the drive belt. (See B3–25 DRIVE BELT REPLACEMENT.)
2. Verify that the drive belt auto tensioner moves smoothly in the operational direction.
   - Replace the drive belt auto tensioner if necessary.
3. Turn the drive belt auto tensioner pulley by hand and verify that it rotates smoothly.
   - Replace the drive belt auto tensioner if necessary.
4. Install the drive belt.

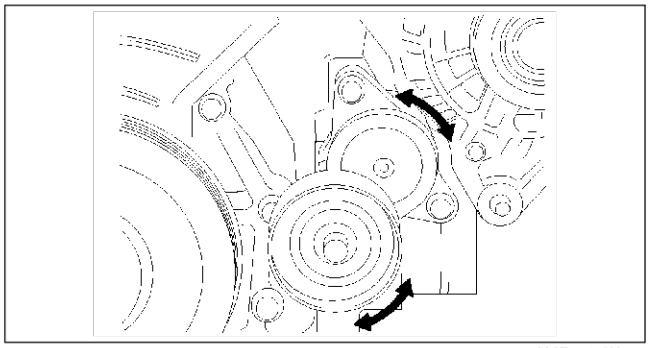

AME2214W004

End Of Sie

VALVE CLEARANCE

VALVE CLEARANCE INSPECTION

AME251212111W01

1. Remove the engine cover. (See B4–17 TIMING BELT REMOVAL/INSTALLATION.)
2. Remove the timing belts cover bolt as shown.
3. Remove the cylinder head cover. (See B4–22 CYLINDER HEAD GASKET REPLACEMENT.)
4. Turn the crankshaft and align the timing mark so that the piston of the No.1 or No.4 cylinder is at TDC of compression.

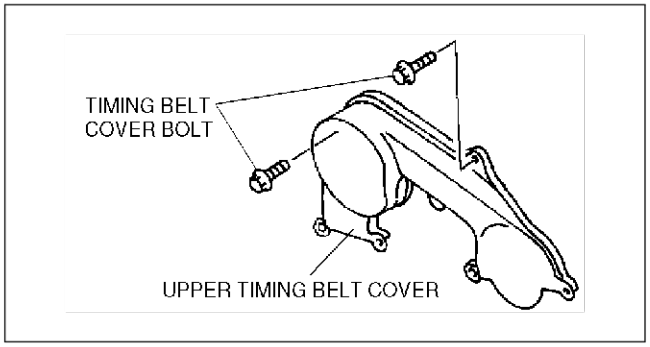

AME2512E006

5. Measure the valve clearances A with the No.1 cylinder at TDC of compression, and those of B with the No.4 cylinder at TDC of compression.
   - If the valve clearance is not within the specification. (See B4–14 VALVE CLEARANCE ADJUSTMENT.)

   Standard valve clearance [Engine cold]
   IN: 0.12—0.18 mm {0.005—0.007 in}
   (0.15±0.03 mm {0.006±0.001 in})
   EX: 0.32—0.38 mm {0.013—0.014 in}
   (0.35±0.03 mm {0.014±0.001 in})

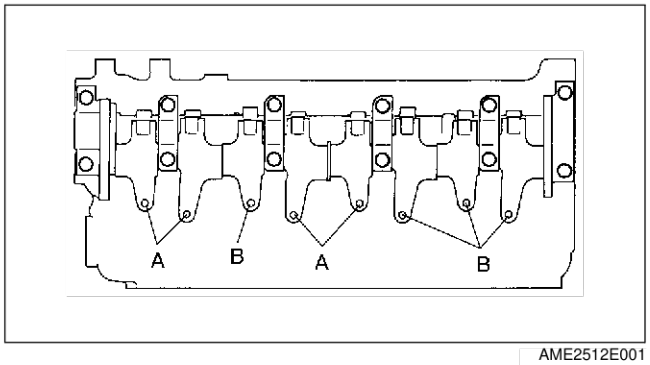

AME2512E001

6. Turn the crankshaft one full turn and measure the remaining valve clearances.
   - Adjust if necessary. (See B4–14 VALVE CLEARANCE ADJUSTMENT.)
7. Install the cylinder head cover. (See B4–28 Cylinder Head Cover Installation Note.)

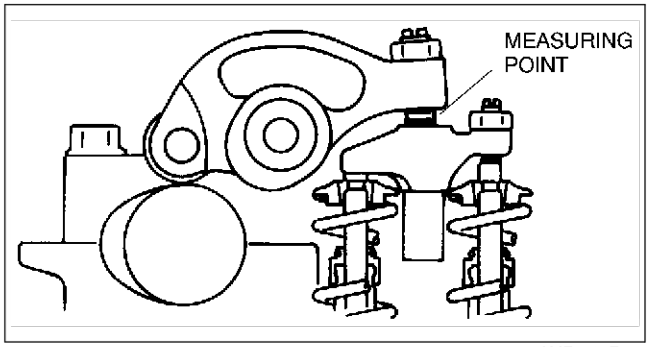

AME2512E002

8. Install the timing belt cover bolt as shown.
9. Install the engine cover. (See B4–17 TIMING BELT REMOVAL/INSTALLATION.)

Tightening torque
7.9—10.7 N·m {80—110 kgf·cm, 69.5—95.4 in·lbf}

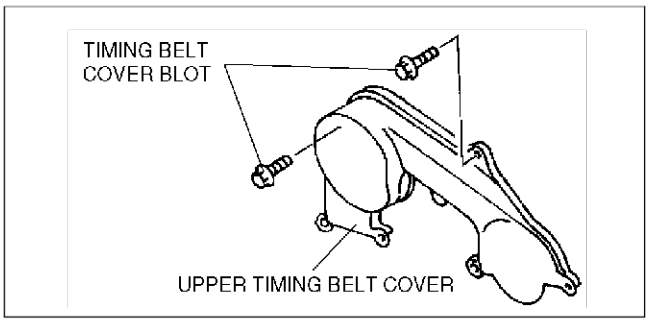

AME2512E007

End Of Sie

VALVE CLEARANCE ADJUSTMENT

AME251212111W02

1. Remove the engine cover. (See B4–17 TIMING BELT REMOVAL/INSTALLATION.)
2. Remove the timing belt cover bolt as shown.
3. Remove the cylinder head cover. (See B4–22 CYLINDER HEAD GASKET REPLACEMENT.)
4. Turn the crankshaft clockwise and set the No.1 cylinder to compression TDC.
5. Remove the injection nozzle. (See F5–84 FUEL INJECTOR REMOVAL/INSTALLATION)

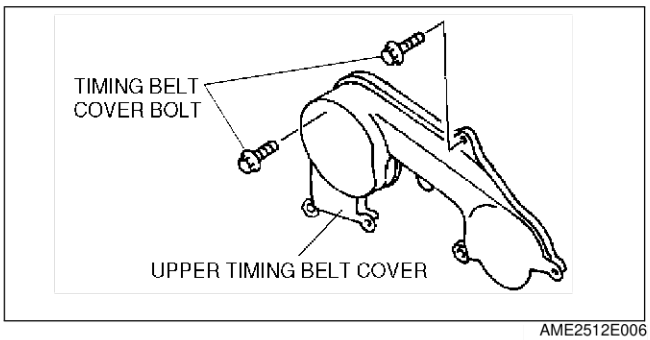

AME2512E006

6. Adjust the valve clearance A with the No.1 cylinder at TDC of compression, and those of B with the No.4 cylinder at TDC of compression.

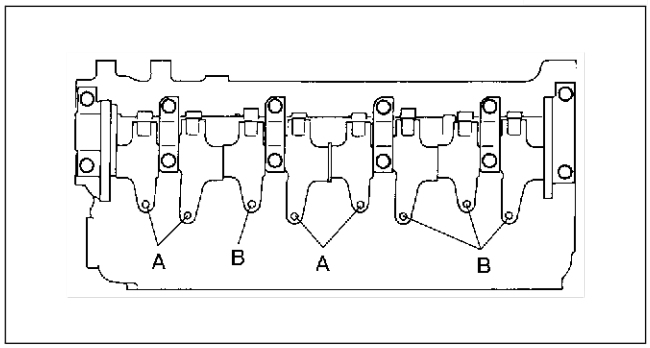

AME2512E001

(1) Hold the rocker bridge using the **SST (49 G012 006)**.
(2) Loosen the locknut (d) using the **SST (49 G012 004)**, and then turn the adjusting screw (c) using the **SST (49 G012 005)** until it is separated from the valve stem completely.

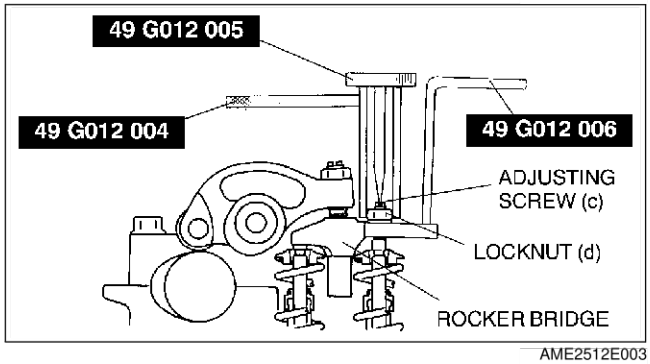

AME2512E003

(3) Loosen the rocker arm locknut (b) using the **SST (49 G012 004)**, and then turn the adjusting screw (a) using the **SST (49 G012 005)** until it is separated from the rocker bridge completely.

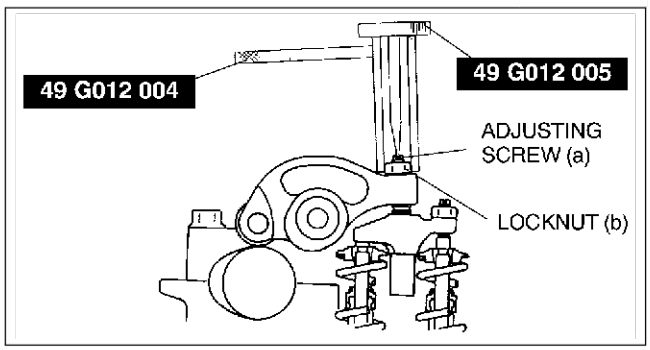

AME2512E004

(4) Insert a feeler gauge between the rocker arm and rocker bridge (e).

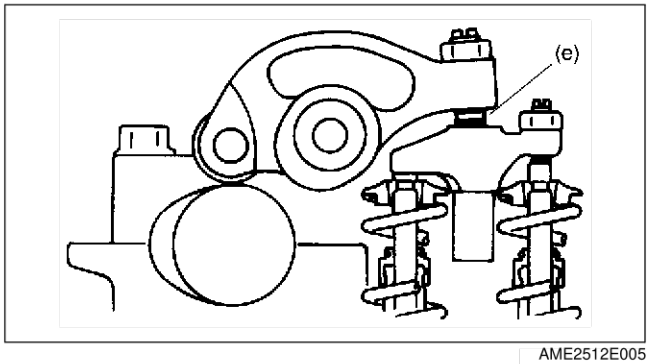

AME2512E005

Standard valve clearance [Engine cold]
IN: 0.12—0.18 mm {0.005—0.007 in}
(0.15±0.03 mm {0.006±0.001 in})
EX: 0.32—0.38 mm {0.013—0.014 in}
(0.35±0.03 mm {0.014±0.001 in})

(5) Adjust the valve clearance by turning the adjuster (a) using the **SST (49 G012 005)**. Then temporarily tighten locknut (b) using the **SST (49 G012 004)**.

(6) With the feeler gauge inserted between the rocker arm and rocker bridge, verify that the feeler gauge remains firmly in place even when the adjusting screw (c) is loosened.
- If the feeler gauge does not remain firmly in place, repeat procedures from Step 1.

(7) Turn the adjusting screw (c) using the **SST (49 G012 005)** until it reaches the valve stem and the feeler gauge fits more firmly. Then tighten the locknut (d) using the **SST (49 G012 004)** to specified torque.

Tightening torque
16—20 N·m {1.6—2.1 kgf·m, 12—15 ft·lbf}

(8) Loosen the locknut (b) using the **SST (49 G012 004)** and readjust the valve clearance (e).

Standard valve clearance [Engine cold]
IN: 0.12—0.18 mm {0.005—0.007 in} (0.15±0.03 mm {0.006±0.001 in})
EX: 0.32—0.38 mm {0.013—0.014 in} (0.35±0.03 mm {0.014±0.001 in})

(9) Tighten the locknut (b) using the **SST (49 G012 004)** to specified torque.

Tightening torque
16—20 N·m {1.6—2.1 kgf·m, 12—15 ft·lbf}

(10) Verify the valve clearance at (e).

Standard valve clearance [Engine cold]
IN: 0.12—0.18 mm {0.005—0.007 in} (0.15±0.03 mm {0.006±0.001 in})
EX: 0.32—0.38 mm {0.013—0.014 in} (0.35±0.03 mm {0.014±0.001 in})

7. Turn the crankshaft one full turn and adjust the remaining valve clearances.
8. Install the injection nozzle. (See F5–84 FUEL INJECTOR REMOVAL/INSTALLATION)
9. Install the cylinder head cover. (See B4–28 Cylinder Head Cover Installation Note.)
10. Install the timing belt cover bolt as shown.
11. Install the engine cover. (See B4–17 TIMING BELT REMOVAL/INSTALLATION.)

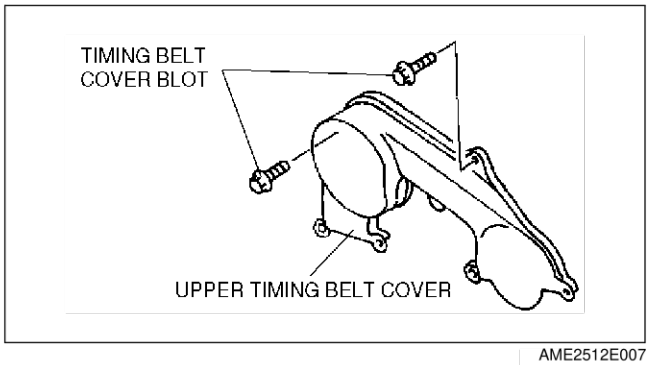

AME2512E007

Tightening torque
7.9—10.7 N·m {80—110 kgf·cm, 69.5—95.4 in·lbf}

End Of Ste

COMPRESSION PRESSURE

COMPRESSION INSPECTION

AME251402000W01

Warning
- **When the engine and the oil are hot, they can badly burn. Be careful not to burn yourself during removal/installation of each component.**

1. Verify that the battery is fully charged.
   - Recharge it if necessary. (See G–10 BATTERY INSPECTION.)
2. Warm up the engine to the normal operating system temperature.
3. Stop the engine and allow it to cool off for **about 10 min**.

Warning
- **Fuel line spills and leakage are dangerous. Fuel can ignite and cause serious injuries or death and damage. Fuel can also irritate skin and eyes. To prevent fuel from spurting out of the glow plug hole, do not ground the fuel injector terminal. (See F5–75 Fuel Line Safety Procedures.)**

4. Disconnect the fuel injector connector.

Warning
- **If the glow plug harness connector is connected, the glow plug harness and engine component can come into contact and cause a short when the engine switch is ON. Disconnect the glow plug harness connector before turning the engine switch on.**

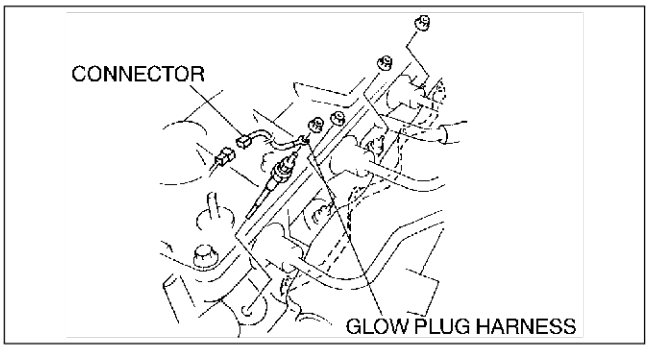

AME2514W001

5. Remove the engine cover. (See B4–17 TIMING BELT REMOVAL/INSTALLATION.)
6. Remove all the glow plugs. (See F5–73 GLOW PLUG REMOVAL/INSTALLATION.)
7. Install the **SSTs** into the glow plug hole.
8. Crank the engine and note the maximum gauge reading.
9. Inspect each cylinder as above.
   - If the compression in one or more cylinders is low, pour a small amount of clean engine oil into the cylinder and reinspect the compression.
     - — If the compression increases, the piston, the piston rings, or cylinder wall may be worn and overhaul is required.
     - — If the compression stays low, a valve may be stuck or improperly seated and overhaul is required.
     - — If the compression in adjacent cylinders stays low, the cylinder head gasket may be damaged or the cylinder head may be distorted and overhaul is required.

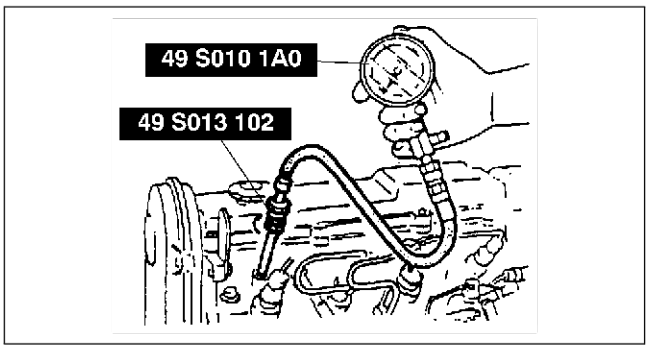

AME2514W002

Compression

kPa {kgf/cm^2, psi} [rpm]

Item	Engine type
	MZR–CD (RF Turbo)
Standard	3,500 {35.7, 507.7} [250]
Minimum	3,100 {31.6, 449.4} [250]
Maximum difference between cylinders	196 {2.0, 28}

10. Remove the **SSTs**.
11. Install the glow plug. (See F5–73 GLOW PLUG REMOVAL/INSTALLATION.)
12. Instal the engine cover. (See B4–17 TIMING BELT REMOVAL/INSTALLATION.)
13. Reconnect the fuel injector connector.
14. Erase DTC from PCM memory using WDS or equivalent.

End Of Sec

TIMING BELT

TIMING BELT REMOVAL/INSTALLATION

AME251612201W01

Warning

- **Fuel vapor is hazardous. It can very easily ignite, causing serious injury and damage. Always keep sparks and flames away from fuel.**
- **Fuel line spills and leakage are dangerous. Fuel can ignite and cause serious injures or death and damage. Fuel can also irritate skin and eyes. To prevent this, always complete the "Fuel Line Safety Procedure". (See F5–75 Fuel Line Safety Procedures.)**

1. Disconnect the negative battery cable.
2. Remove the splash shield (RH).
3. Remove the drive belt. (SeeB4–12 DRIVE BELT REPLACEMENT.)
4. Remove in the order shown in the table.
5. Install in the reverse order of removal.
6. Start the engine and inspect the pulleys and the drive belt for runout and contact.

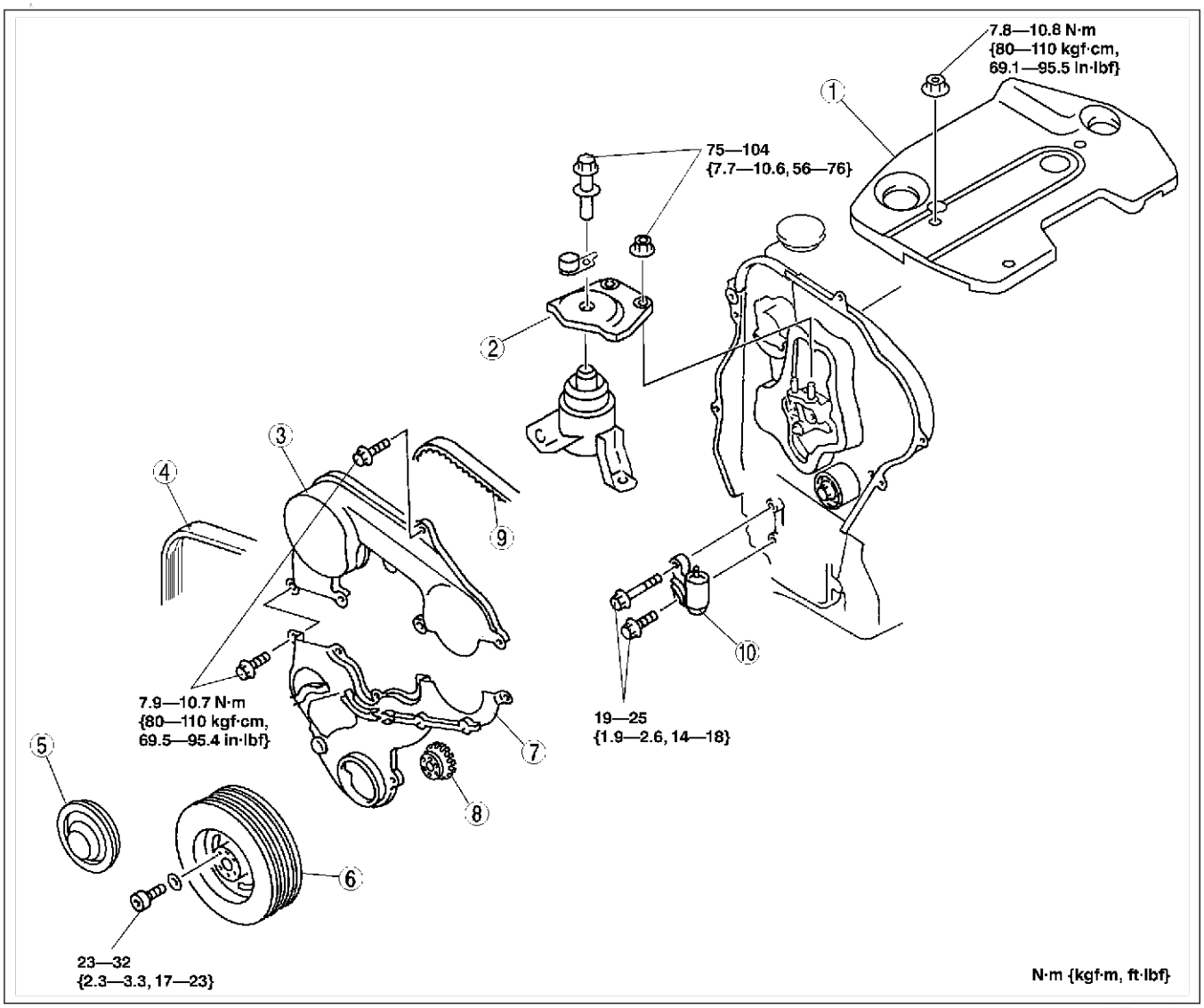

1	Engine cover
2	No.3 engine mount bracket (See B4-19 No.3 Engine Mount Removal Note) (See B4–21 No.3 Engine Joint Bracket Installation Note)
3	Upper timing belt cover
4	Drive belt (See B4–12 DRIVE BELT REPLACEMENT)
5	Crankshaft pulley cover
6	Crankshaft pulley (See B4–21 Crankshaft Pulley Installation Note)

7	Lower timing belt cover (See B4–19 Lower Timing Belt Cover Removal Note)
8	Guide plate
9	Timing belt (See B4–19 Timing Belt, Timing Belt Auto Tensioner Removal Note) (See B4–20 Timing Belt, Timing Belt Auto Tensioner Installation Note)
10	Timing belt auto tensioner (See B4–19 Timing Belt, Timing Belt Auto Tensioner Removal Note) (See B4–20 Timing Belt, Timing Belt Auto Tensioner Installation Note)

No.3 Engine Mount Removal Note

1. Suspend the engine using the **SSTs**.

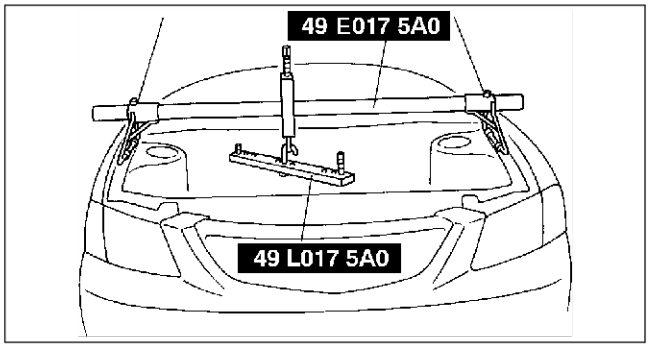

YMU110WAD

Lower Timing Belt Cover Removal Note

Caution

- **The timing belt cover could be damaged easily. Hold the timing belt cover at the locations indicated in the figure and remove the crankshaft position sensor harness slowly.**

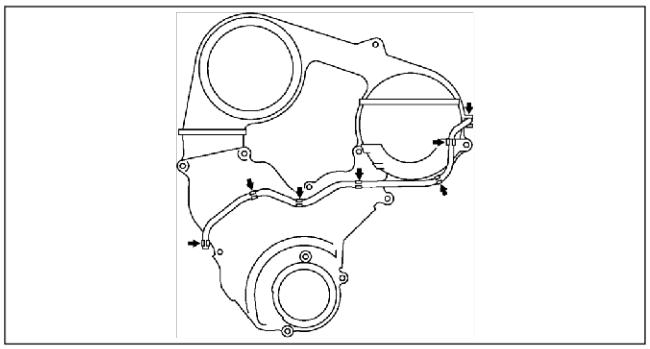

AEE2516W100

Timing Belt, Timing Belt Auto Tensioner Removal Note

1. Turn the crankshaft clockwise and align the timing marks as shown.

Caution

- **Forcefully twisting the belt, turning it inside out, or allowing oil or grease on it will damage the belt and shorten its life.**
- **After removing the timing belt, do not move the crankshaft and/or camshaft pulley from this position because it can cause the valve and piston to contact.**

2. Remove the timing belt auto tensioned.
3. Mark the timing belt rotation on the belt for proper reinstallation.

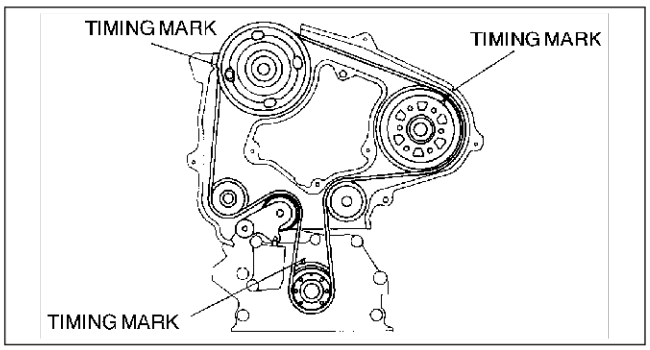

AME2516E002

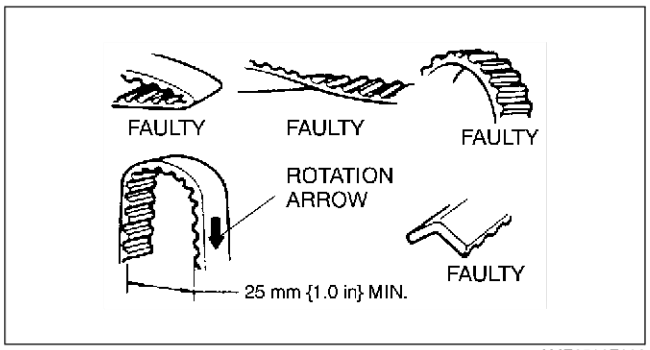

AME2516E003

Timing Belt, Timing Belt Auto Tensioner Installation Note

1. Measure the tensioned rod projection length.
   - If not as specified, replace the auto tensioned.
2. Inspect the auto tensioned for oil leakage.
   - If not as specified, replace the auto tensioned.

Projection (Free length)
12.9—14.6 mm. {0.508—0.574 in}

Caution
- **Placing the auto tensioner horizontally can cause oil leakage and damage the auto tensioner. Place the auto tensioner vertically when using a vise.**

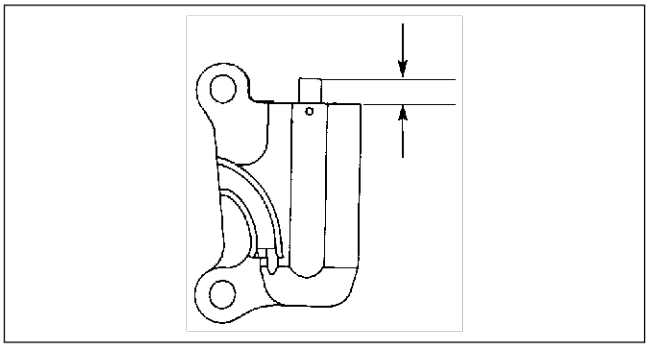

AME2524E056

3. Verify the thrust of the auto tensioner rod in the following order:
   - If the tensioner rod is rigid when it is pushed with a force of approximately **235 N {24 kgf, 53 lbf}**, push it down slowly and fix the pin in the hole.
   - If there is no resistance on the tensioner lod and it moves slightly when it is pushed with a force of approximately **235 N {24 kgf, 53 lbf}**;

   (1) Push it down slowly two or three times to the bottom end of the rod.
   (2) If the rod protrudes approximately **8.1 mm {0.32 in}**, verify that there is resistance on the tensioner lod.

Caution
- **To prevent damage to the inside of the auto tensioner, do not press down the auto tensioner rod with a force greater than the specified 235 N {24 kgf, 53 lbf}. Be careful that the rod does not touch the bottom.**

  - If the rod protrudes is restored, push it down slowly and fix the pin in the hole.
    — If the resistance is not restored, replace the auto tensoner.

Caution
- **To prevent the bolts (M8 x 1.25) from damaging the fuel injection pump and pulley, do not fully tighten the fixing bolts. If it contacts the pulley surface, it will damage the pulley.**

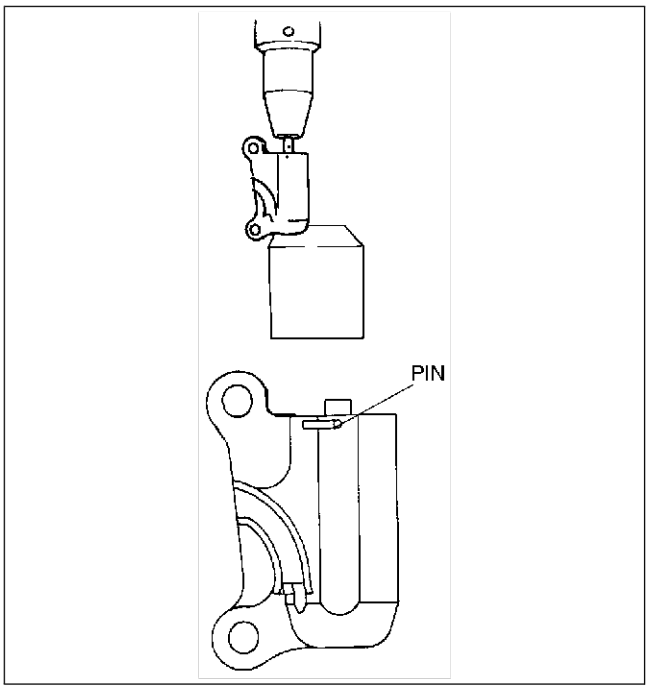

AME2516E005

4. Verify that all timing marks are correctly aligned.
5. Fix the camshaft pulley to the cylinder head using bolt (**M8 x1.25**).
6. Fix the injection pump pulley to the bracket using two bolts (**M8 x1.25**).
   - If not, align all timing marks according to the procedure below.

Caution
- **Turn the crankshaft in the direction which will prevent the TDC and BDC from being passed. Otherwise it can cause the valve and piston to contact.**

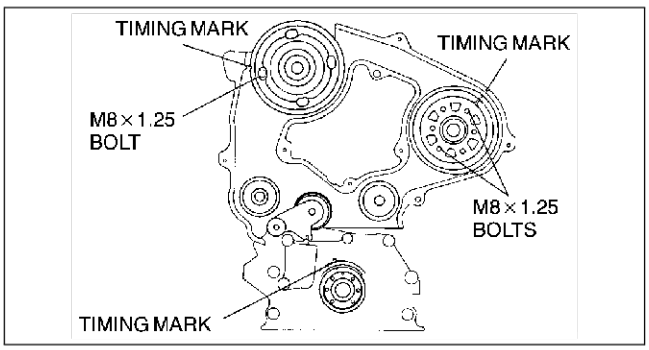

AME2516E006

(1) Turn the crankshaft and set it an angle of **45°** or more away from the TDC and BDC.
(2) Align the timing marks of the camshaft pulley.
(3) Align the timing marks of the injection pump pulley.
(4) Turn the crankshaft and align the timing marks of the timing belt pulley.

7. Install the timing belt on the pulleys in the order described below.
   (1) Timing belt pulley
   (2) Idler
   (3) Injection pump pulley
   (4) Camshaft pulley
   (5) Water pump pulley
   (6) Tensioner
8. Remove the injection pump pulley fixing bolts and camshaft pulley fixing bolt (**M8 x 1.25**).
9. Hand tighten the auto tensioner bolts in the order A to B as indicated in the figure.

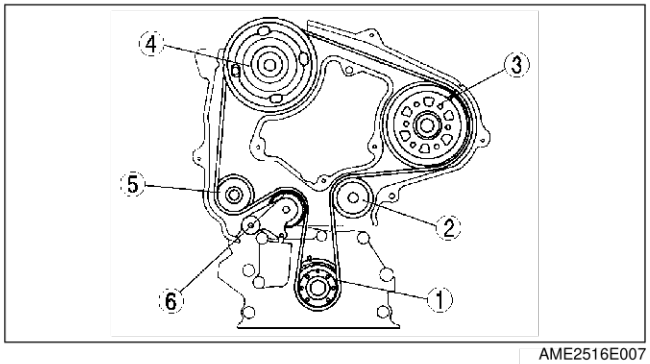

AME2516E007

10. Tighten the auto tensioner bolts in the order A to B as indicated in the figure.

    Tightening torque
    19—25 N·m {1.9—2.6 kgf·m, 14—18 ft·lbf}

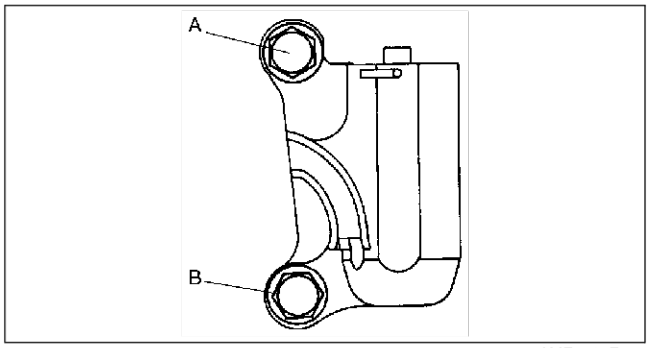

AME2516E008

11. Remove the pin from the auto tensioner to apply tension to the belt.
12. Turn the crankshaft clockwise twice, and align the timing marks.
13. Verify that all timing marks are correctly aligned.
    - If not as specified, repeat from Timing Belt, Timing Belt Auto Tensioner Removal Note.

Crankshaft Pulley Installation Note

1. Tighten the bolts in the order shown.

   Tightening torque
   23—32 N·m {2.3—3.3 kgf·m, 17—23 ft·lbf}

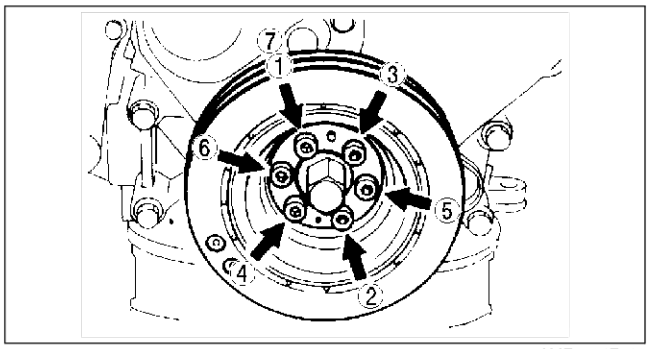

AME2524E013

No.3 Engine Joint Bracket Installation Note

1. Tighten the No.3 engine joint bracket bolt and nut in the order shown.

   Tightening torque
   75—104 N·m {7.7—10.6 kgf·m, 56—76 ft·lbf}

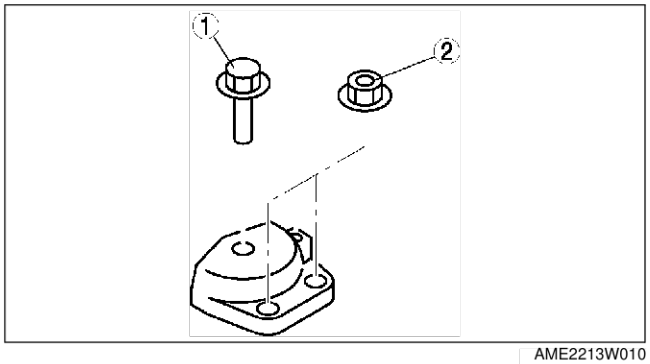

AME2213W010

End Of Sec

CYLINDER HEAD GASKET

CYLINDER HEAD GASKET REPLACEMENT

AME251810271W01

Warning

- **Fuel vapor is hazardous. It can very easily ignite, causing serious injury and damage. Always keep sparks and flames away from fuel.**
- **Fuel line spills and leakage are dangerous. Fuel can ignite and cause serious injuries or death and damage. Fuel can also irritate skin and eyes. To prevent this, always complete the "Fuel Line Safety Procedure". (See F5–75 Fuel Line Safety Procedures.)**

Caution

- **To prevent the fuel injection pipe from clogging, be careful that foreign material has not entered the pipe. Also, be sure to tighten the bolts with the specified tightening torque when installing the fuel injection pipe.**
- **To prevent fuel leakage, follow the procedure indicated in the workshop manual when removing and installing the fuel injector.**
- **The fuel injection pipe can be removed and reinstalled up to five times. Be sure to record in the service record when removing and installing the fuel injection pipe. If removing it for the sixth time, be sure to replace it with a new one.**

1. Remove the timing belt. (See B4–17 TIMING BELT REMOVAL/INSTALLATION.)
2. Remove the vacuum pump. (See P–12 VACUUM PUMP REMOVAL/INSTALLATION (MZR-CD (RF Turbo)).)
3. Remove the P/S oil pump with the oil hose still connected. Position the P/S oil pump so that it is out of the way. (See N–14 POWER STEERING OIL PUMP (MZR-CD (RF Turbo)) REMOVAL/INSTALLATION.)
4. Remove the turbocharger. (See F5–86 EXHAUST SYSTEM REMOVAL/INSTALLATION.)
5. Remove all the glow plugs. (See F5–73 GLOW PLUG REMOVAL/INSTALLATION.)
6. Remove in the order shown in the table.
7. Install in the reverse order of removal.
8. Inspect valve clearance. (See B4–13 VALVE CLEARANCE INSPECTION.)
9. Inspect the engine oil level.
10. Inspect the compression. (See B4–16 COMPRESSION INSPECTION.)
11. Start the engine and:
    (1) Inspect the pulleys and the drive belt for runout and contact.
    (2) Inspect the engine oil, engine coolant, and fuel leakage.
    (3) Inspect the idle speed. (SeeF5–64 IDLE SPEED INSPECTION.)

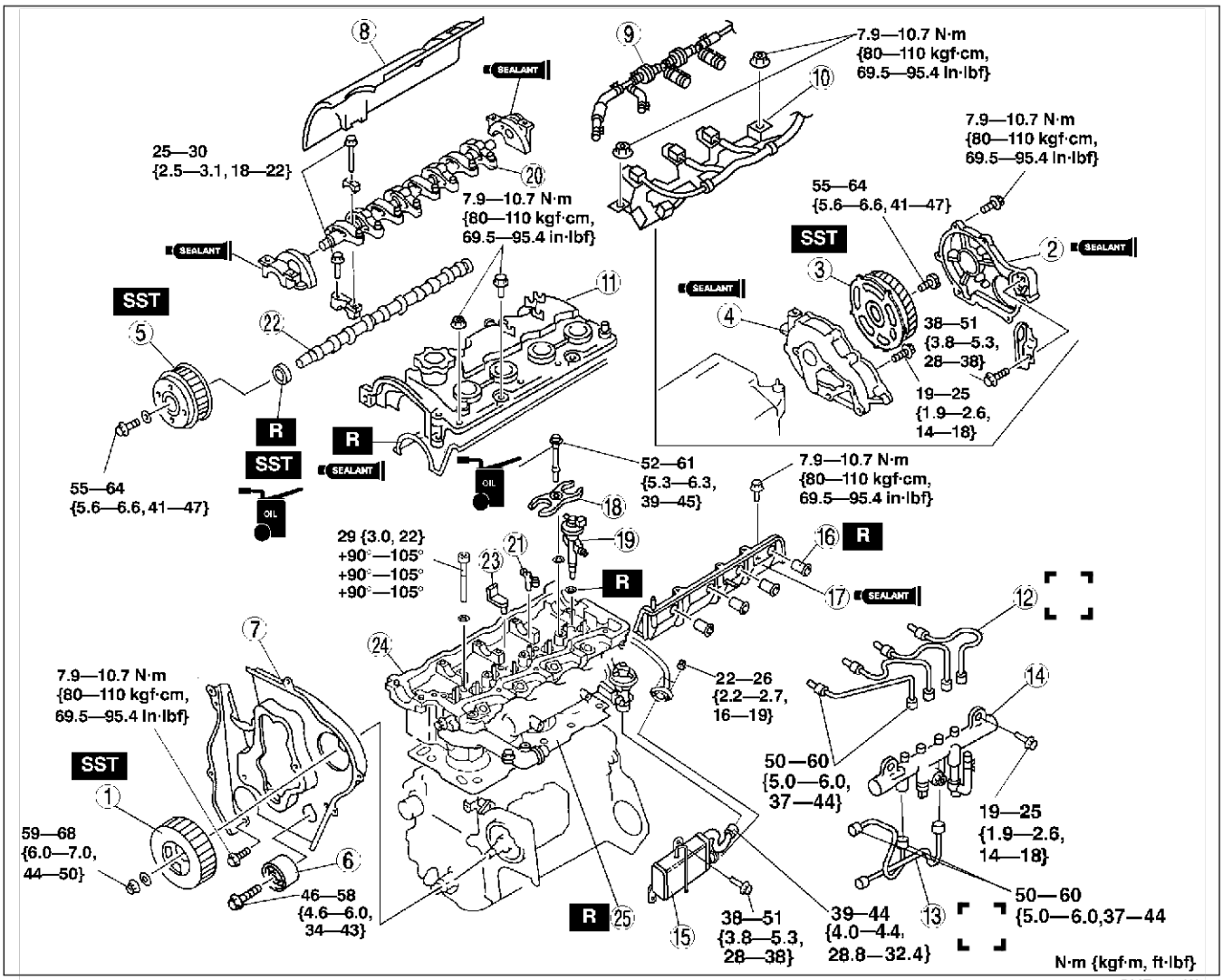

BME2518W001

1	Injection pump pulley (SeeB4–24 Injection Pump Pulley Removal Note) (SeeB4–29 Injection Pump Pulley Installation Note.)
2	Gear cover (SeeB4–29 Gear Cover Installation Note.)
3	Drive gear (SeeB4–24 Drive Gear Removal Note.) (SeeB4–29 Drive Gear Installation Note.)
4	Gear case (SeeB4–29 Gear Case Installation Note.)
5	Camshaft pulley (SeeB4–24 Camshaft Pulley Removal Note.) (SeeB4–28 Camshaft Pulley Installation Note.)
6	Idler (See B4–30 Idler Assembly Note)
7	Seal plate (SeeB4–25 Seal Plate Removal Note.) (SeeB4–28 Seal Plate Installation Note.)
8	Insulator
9	Fuel return hose
10	Injector harness bracket
11	Cylinder head cover (SeeB4–28 Cylinder Head Cover Installation Note.)

12	Fuel injection pipe
13	Fuel injection pipe
14	Common rail (See F5–82 Common Rail Installation Note)
15	EGR water cooler
16	Nozzle seal
17	Side wall (SeeB4–27 Side Wall Installation Note.)
18	Injection nozzle bracket
19	Injection nozzle (SeeF5–84 Fuel Injector Installation Note.)
20	Rocker arm and rocker arm shaft (SeeB4–25 Rocker Arm and Rocker Arm Shaft Removal Note.) (SeeB4–26 Rocker Arm and Rocker Arm Shaft Installation Note.)
21	Rocker bridge
22	Camshaft
23	Breather pipe
24	Cylinder head (SeeB4–26 Cylinder Head Installation Note.)
25	Cylinder head gasket

Injection Pump Pulley Removal Note

1. Verify that timing marks are correctly aligned.

Caution

- **To prevent the bolts (M8 x 1.25) from damaging the injection pump and pulley, do not fully tighten the fixing bolts. If it contacts the pulley surface, it will damage the pulley.**

2. Fix the injection pump pulley to the bracket using two bolts (**M8 x 1.25**).
3. Loosen the injection pump pulley lock nut.

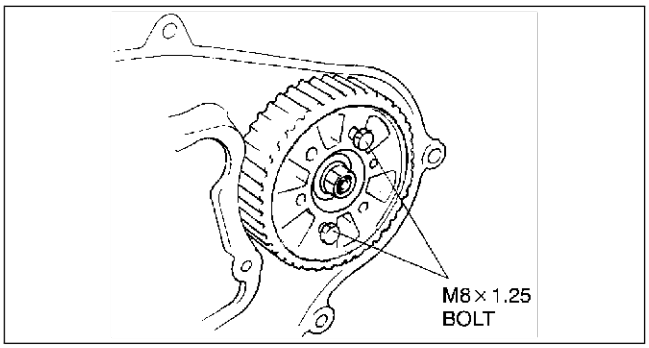

AME2524E005

4. Separate the injection pump pulley from the injection pump shaft using the **SST**.
5. Remove the injection pump pulley fixed bolts (**M8 x 1.25**).

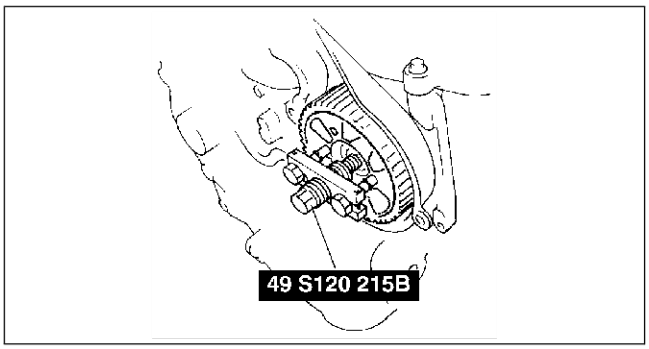

AME2524E006

Drive Gear Removal Note

1. Hold the camshaft using the **SST**.
2. Remove the drive gear lock bolt.

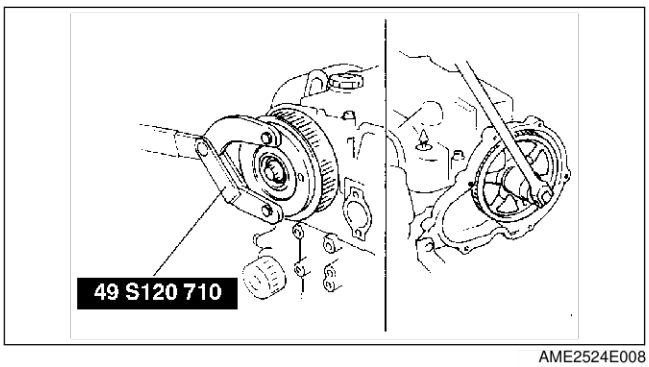

AME2524E008

Camshaft Pulley Removal Note

1. Hold the camshaft using the **SST**.
2. Remove the camshaft pulley lock bolt.

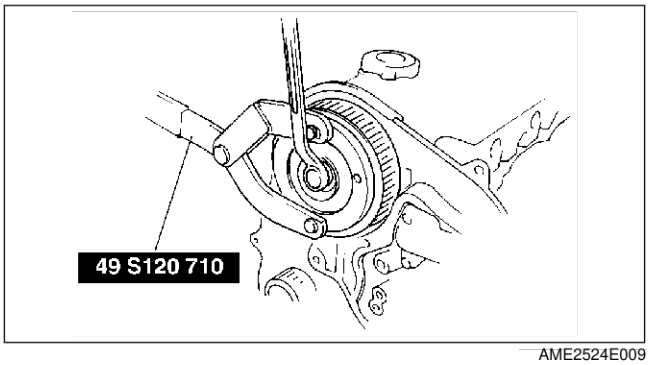

AME2524E009

3. Remove the camshaft pulley using the **SST**.

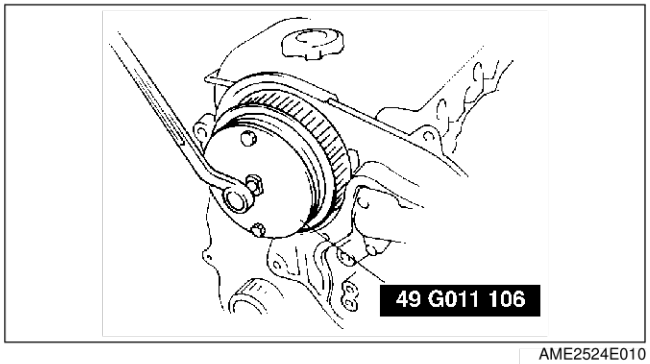

AME2524E010

Seal Plate Removal Note

1. Remove the seal plate from the engine component. However, the seal plate cannot be removed completely. Separate the seal plate from the engine component by removing the fitting bolts so that the cylinder head can be removed.

Rocker Arm and Rocker Arm Shaft Removal Note

1. Loosen the bolts in two or three steps in the order shown.

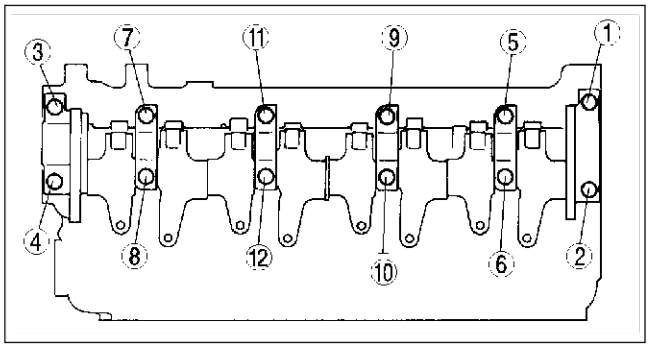

AME2521E001

Cylinder Head Removal Note

1. Loosen the cylinder head bolts in two or three steps in the order shown.

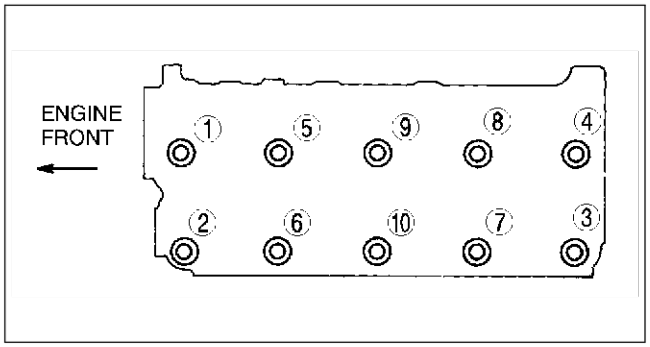

AME2524E020

Cylinder Head Installation Note

1. Before installation, measure the length of each bolt. Replace any that exceed the maximum length.

   Maximum length
   161.0 mm {6.338 in}

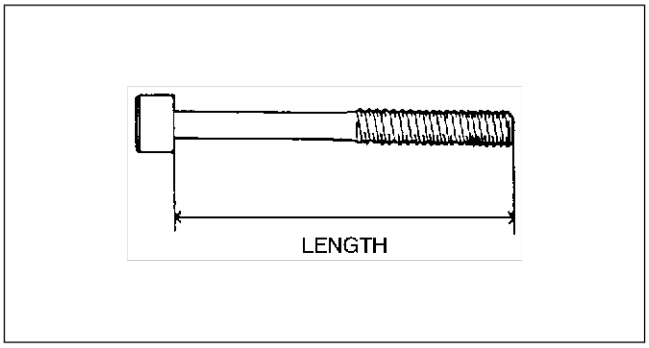

AME2524E055

2. Tighten the bolts in two or three steps in the order shown.

   Tightening torque
   29 N·m {3.0 kgf·m, 22 ft·lbf}

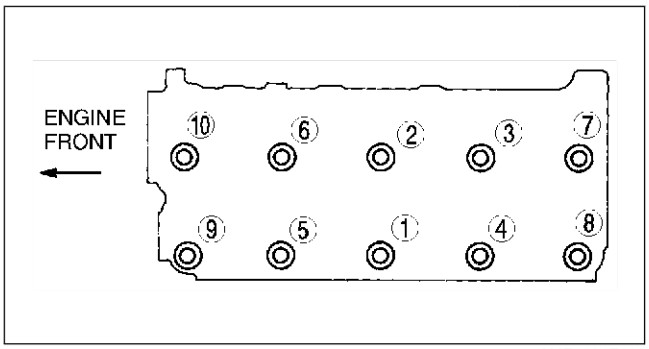

AME2524E021

3. Put a paint mark on each bolt head.
4. Using the marks as a reference, tighten the bolts by turning each **90°—105° in** the sequence shown.
5. Further tighten each bolt by turning another **90°—105°**.
6. Then further tighten each bolt by turning another **90°—105°**.

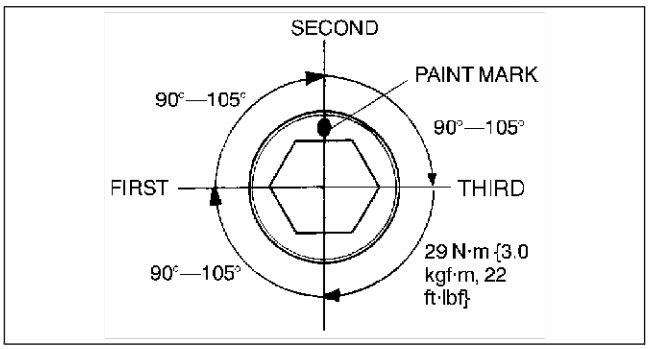

AME2524E022

Rocker Arm and Rocker Arm Shaft Installation Note

1. Apply sealant as shown in the figure.

   Thickness
   2 mm {0.079 in}

2. Install the camshaft caps according to the cap number.

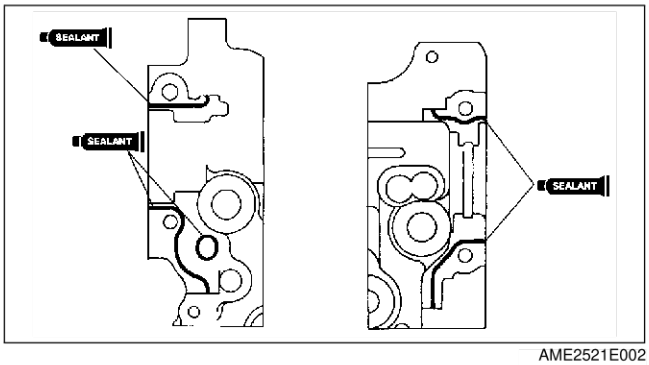

AME2521E002

3. Install the rocker arm shaft plane side upward.

Caution
- **Because there is little camshaft thrust clearance, the camshaft must be held horizontally while it is installed. Otherwise, excessive force will be applied to the thrust area, causing burr on the thrust receiving area of the cylinder head journal. To avoid this, the following procedure must be observed.**

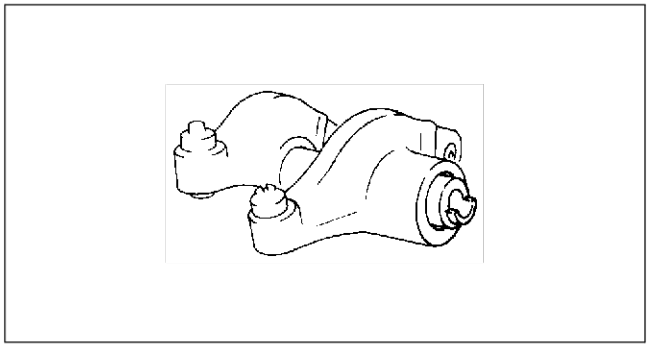

AME2521E003

4. Tighten the bolts in two or three steps in the order shown.

Tightening torque
25—30 N·m {2.5—3.1 kgf·m, 18—22 ft·lbf}

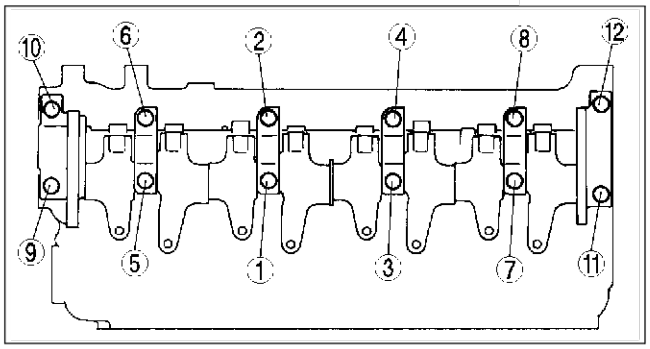

AME2521E004

5. Apply clean engine oil to the new oil seal.
6. Push the oil seal slight in by hand.
7. Tap the oil seal into the cylinder head using the **SST** and a hammer.

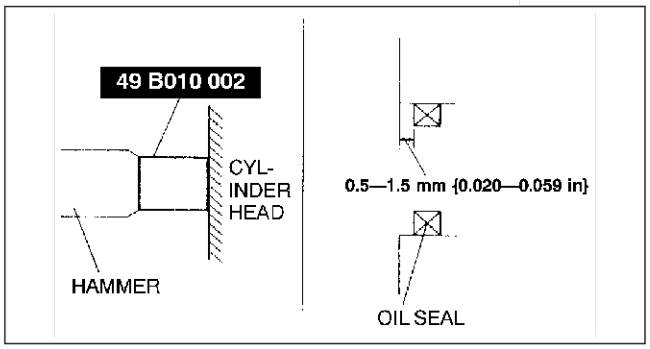

AME2524E015

Side Wall Installation Note

1. Apply silicone sealant as shown in the figure.

Thickness
2 mm {0.079 in}

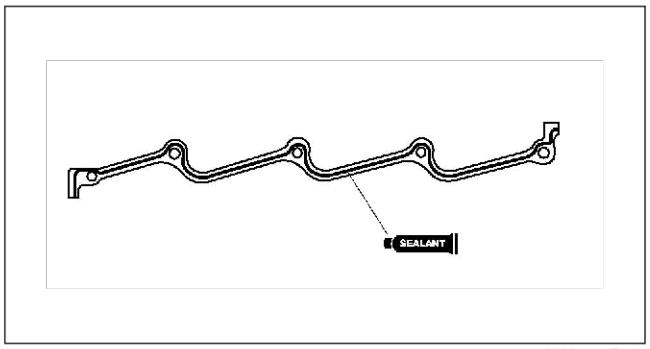

AMJ2224E048

Cylinder Head Cover Installation Note

1. Apply silicone sealant to the shaded areas.

   Thickness
   2 mm {0.079 in}

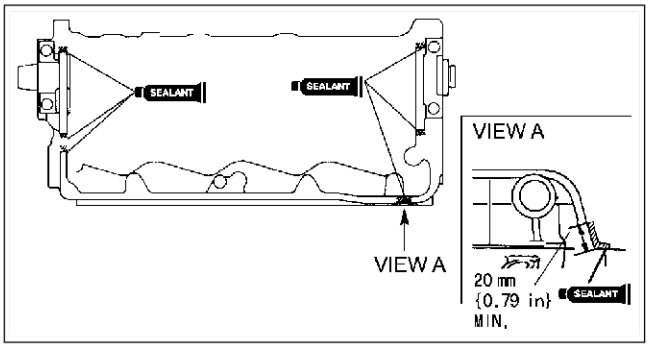

AME2524E017

2. Tighten the bolts in the order shown.

   Tightening torque
   7.9—10.7 N·m {80—110 kgf·cm, 69.5—95.4 in·lbf}

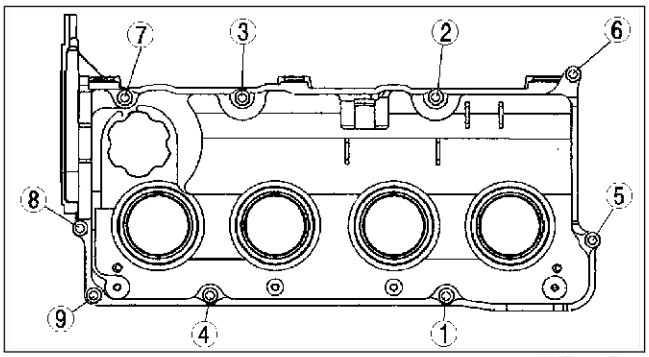

AME2524E777

Seal Plate Installation Note

1. Install the seal plate and hand tighten the bolt in the order A to B.
2. Tighten the bolts in the order shown.

   Tightening torque
   7.9—10.7 N·m {80—110 kgf·cm, 69.5—95.4 in·lbf}

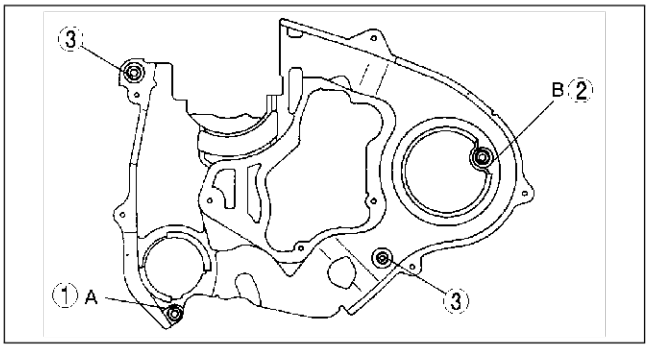

AME2516E004

Camshaft Pulley Installation Note

1. Hold the camshaft using the **SST**.

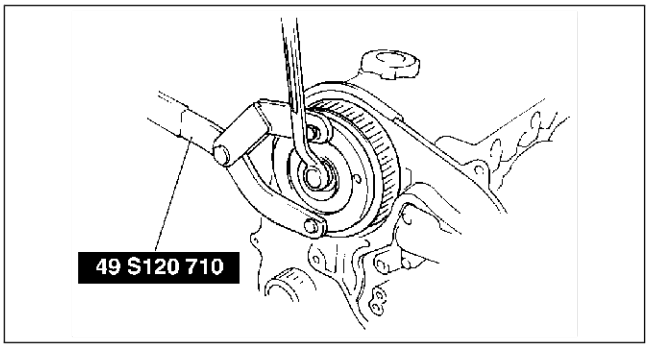

AME2524E009

Gear Case Installation Note

1. Apply silicone sealant as shown in the figure.

   Thickness
   1.5—2.5 mm {0.060—0.098 in}

2. Tighten the bolts in clockwise order.

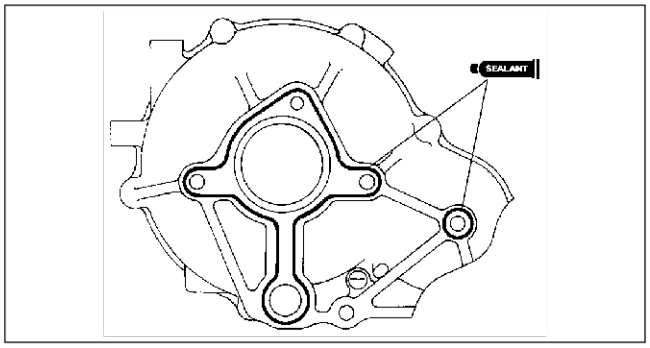

AME2524E011

Drive Gear Installation Note

1. Hold the camshaft using the **SST**.
2. Tighten the drive gear lock bolt.

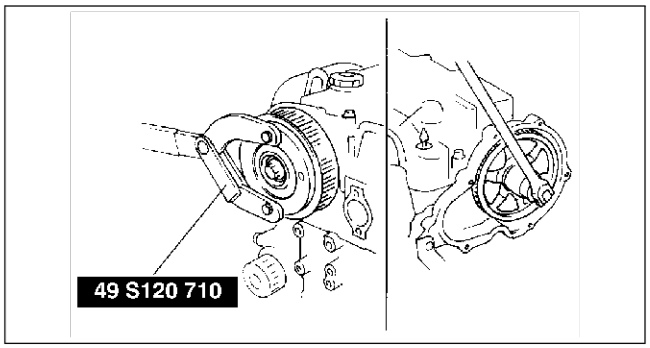

AME2524E008

Gear Cover Installation Note

1. Apply silicone sealant as shown in the figure.

   Thickness
   1.5—2.5 mm {0.060—0.098 in}

2. Tighten the bolts in clockwise order.

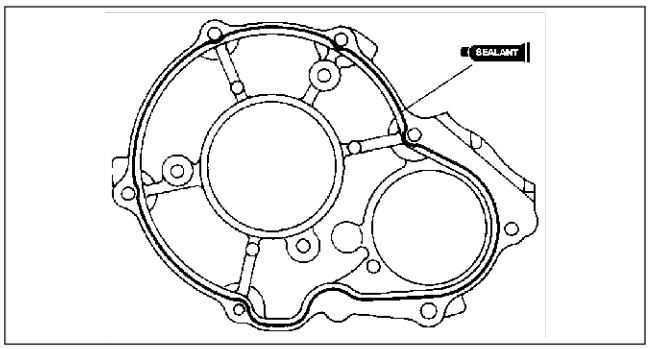

AME2524E012

Injection Pump Pulley Installation Note

Caution

- **To prevent the bolts (M8 x1.25) from damaging the injection pump and pulley, do not fully tighten the fixing bolts. If it contacts the pulley surface, it will damage the pulley.**

1. Fix the injection pump pulley to the bracket using two bolts (**M8 x 1.25**).

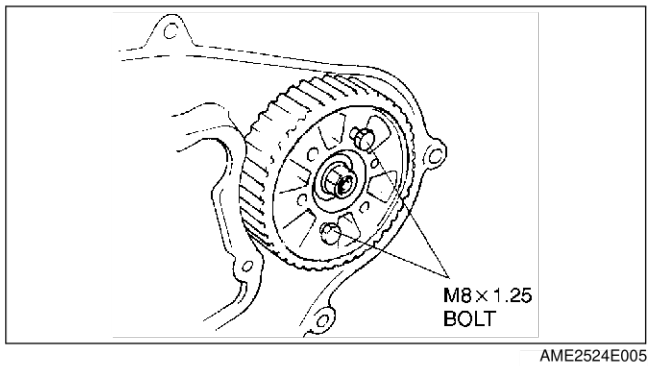

AME2524E005

Idler Assembly Note

Caution
- **The idler has a front and back relative to the engine, therefore when installing make sure that the longer projection of the shaft is on the engine side as indicated in the figure.**

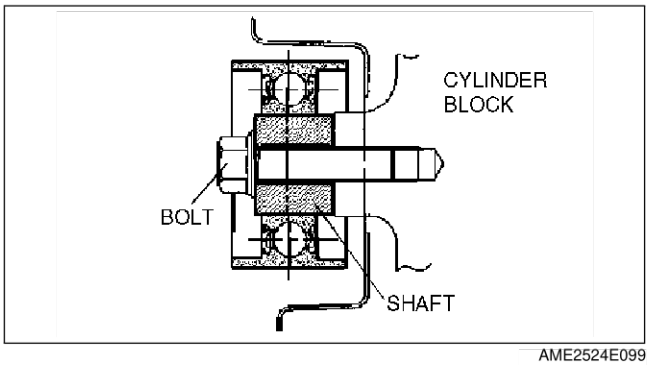

AME2524E099

End Of Sie

FRONT OIL SEAL

FRONT OIL SEAL REPLACEMENT

AME252010602W01

1. Remove the timing belt. (See B4–17 TIMING BELT REMOVAL/INSTALLATION)
2. Remove in the order shown in the table.
3. Install in the reverse order of removal.

1	Timing belt pulley lock bolt (See B3–43 Crankshaft Pulley Lock Bolt Removal Note) (See B3–44 Crankshaft Pulley Lock Bolt Installation Note)
2	Timing belt pulley
3	Front oil seal (See B4–31 Front Oil Seal Removal Note) (See B4–31 Front Oil Seal Installation Note)

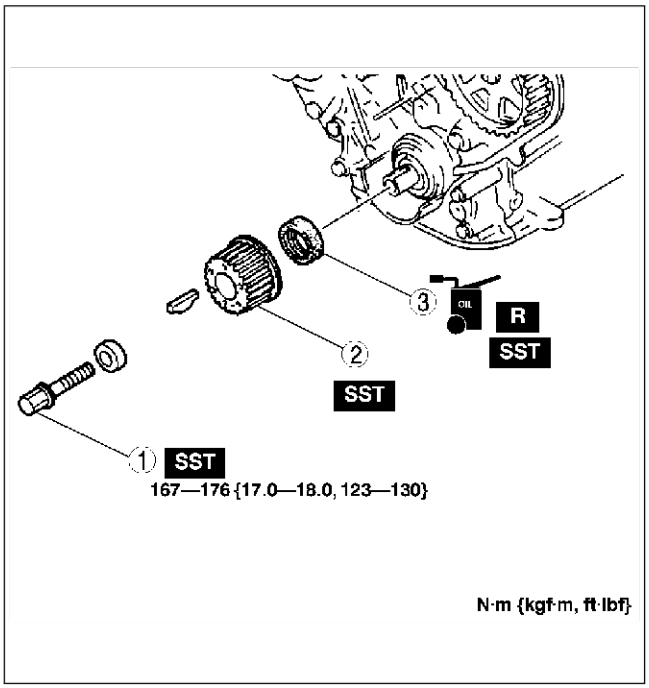

AME2520W001

Timing Belt Pulley Lock Bolt Removal Installation Note

1. Hold the timing belt pulley using the **SSTs**.

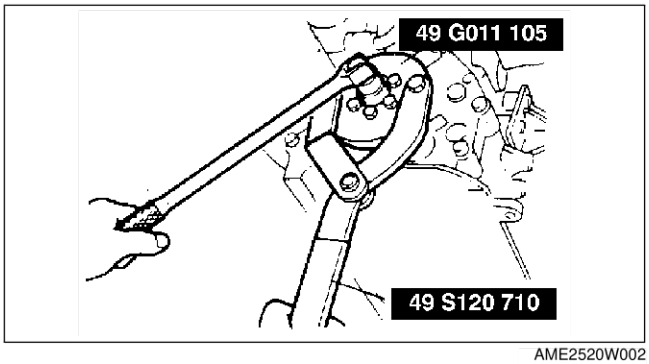

AME2520W002

Timing Belt Pulley Removal Note

1. Remove the timing belt pulley using the **SST**.

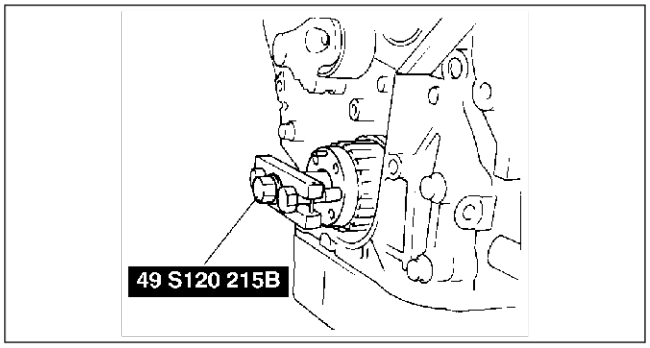

AME2524E007

Front Oil Seal Removal Note

1. Cut the oil seal lip using a razor knife.

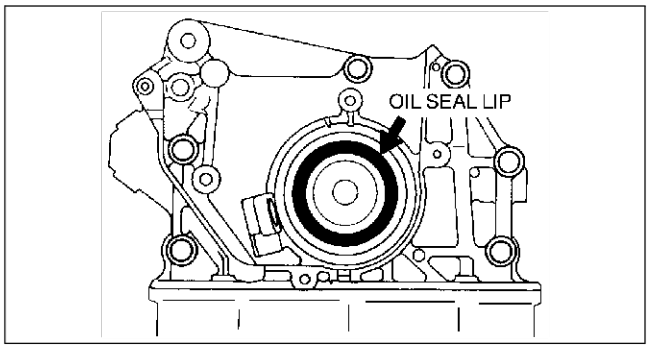

AME2520W003

2. Remove the oil seal using a screwdriver protected with a rag.

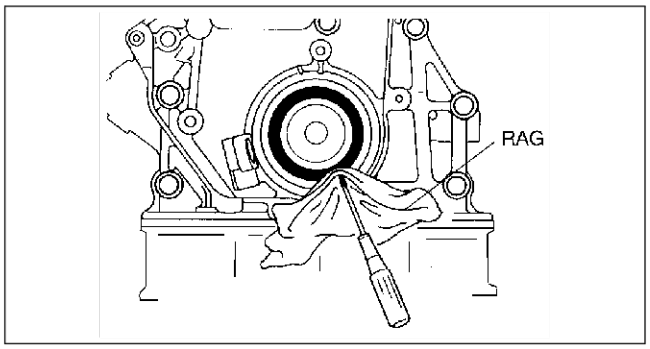

AME2520W004

Front Oil Seal Installation Note

1. Apply clean engine oil to the oil seal lip.
2. Push the oil seal slightly in by hand.
3. Tap the oil seal in evenly using the **SST** and a hammer. The oil seal must be tapped in until it is flush with the edge of the oil pump body.

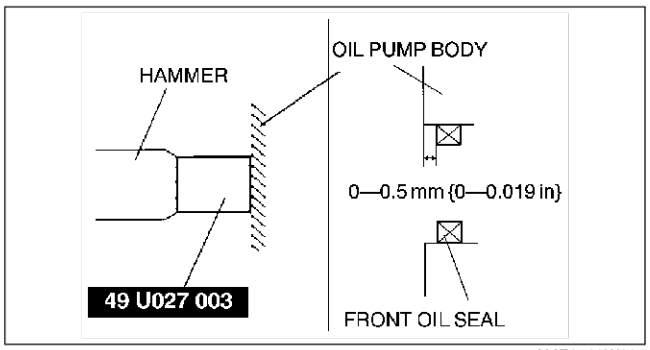

AME2520W005

End Of Sta

REAR OIL SEAL

REAR OIL SEAL REPLACEMENT

AME252211399W01

1. Remove the flywheel. (See H–10 CLUTCH UNIT REMOVAL/INSTALLATION.)
2. Remove in the order indicated in the table.
3. Install in the reverse order of removal.

1	Rear oil seal (See B4–32 Rear Oil Seal Removal Note) (See B4–32 Rear Oil Seal Installation Note)

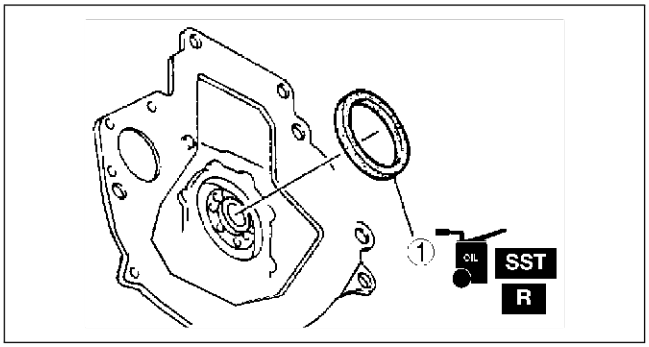

AME2522W001

Rear Oil Seal Removal Note

1. Cut the oil seal lip using a razor knife.

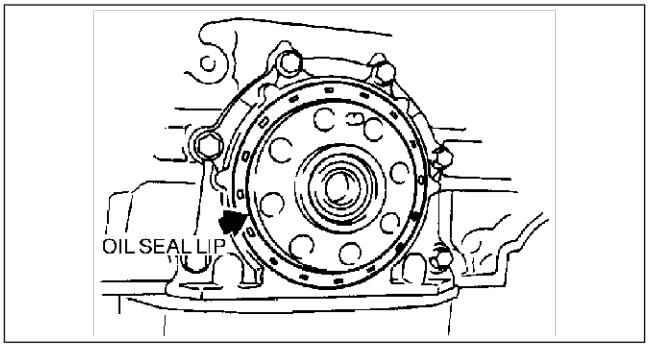

AME2522W002

2. Remove the oil seal using a screwdriver protected with a rag.

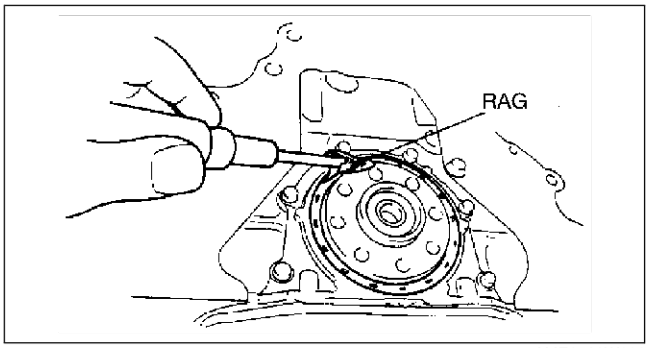

AME2522W003

Rear Oil Seal Installation Note

1. Apply clean engine oil to the oil seal lip.
2. Push the oil seal slightly in by hand.
3. Tap the oil seal in evenly using the **SST** and a hammer.

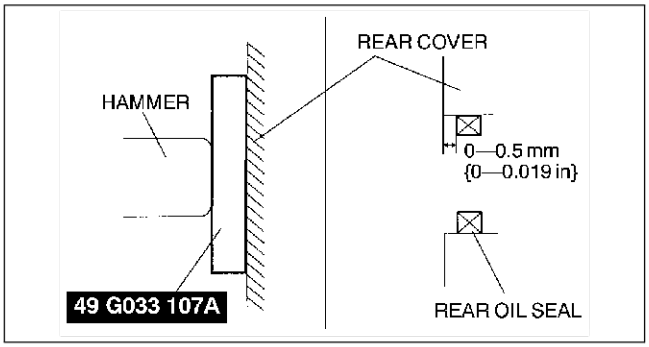

AME2522W004

ENGINE

ENGINE REMOVAL/INSTALLATION

AME252401001W01

Warning

- **Fuel vapor is hazardous. It can very easily ignite, causing serious injury and damage. Always keep sparks and flames away from fuel.**
- **Fuel line spills and leakage are dangerous. Fuel can ignite and cause serious injures or death and damage. Fuel can also irritate skin and eyes. To prevent this, always complete the "Fuel Line Safety Procedure". (See F5–75 Fuel Line Safety Procedures.)**

1. Disconnect the negative battery cable. (See G–9 BATTERY REMOVAL/INSTALLATION.)
2. Drain the engine coolant, engine oil, and transaxle oil.
3. Remove the engine cover. (See E–20 COOLING FAN MOTOR REMOVAL/INSTALLATION.)
4. Remove the air cleaner and air hose. (See F5–66 INTAKE-AIR SYSTEM REMOVAL/INSTALLATION.)
5. Disconnect the fuel hose. (See F5–75 BEFORE REPAIR PROCEDURE.)
6. Remove the transverse member.
7. Remove the front pipe. (See F5–86 EXHAUST SYSTEM REMOVAL/INSTALLATION.)
8. Remove the battery and carrier. (See G–9 BATTERY REMOVAL/INSTALLATION.)
9. Remove the rods, cables and pipes related to the transaxle. (See J2–10 MANUAL TRANSAXLE REMOVAL/INSTALLATION.)
10. Remove the vacuum hose and the heater hose.
11. Remove the P/S oil pump pipe and hose. (See N–14 POWER STEERING OIL PUMP (MZR-CD (RF Turbo)) REMOVAL/INSTALLATION.)
12. Remove the A/C compressor with the pipe still connected. Position the A/C compressor so that it is out of the way. (See U–7 A/C COMPRESSOR REMOVAL/INSTALLATION.)
13. Remove the drive shaft. (See M–24 DRIVE SHAFT (MZR-CD (RF TURBO)) REMOVAL/INSTALLATION.)
14. Remove the cooling fan. (See E–20 COOLING FAN MOTOR REMOVAL/INSTALLATION.)
15. Remove in the order indicated in the table.
16. Install in the reverse order of removal.
17. Fill the engine coolant, engine oil, and transaxle oil.
18. Bleed the air from the fuel line. (SeeF5–75 AFTER REPAIR PROCEDURE.)
19. Start the engine and:
    - Inspect the pulleys and the drive belt for runout and contact.
    - Inspect the engine oil, engine coolant transaxle oil, P/S fluid, and fuel for leakage.
    - Inspect the idle speed. (SeeF5–64 IDLE SPEED INSPECTION.)
20. Perform a road test.
21. Reinspect the engine oil, engine coolant, transaxle oil, and P/S fluid levels.

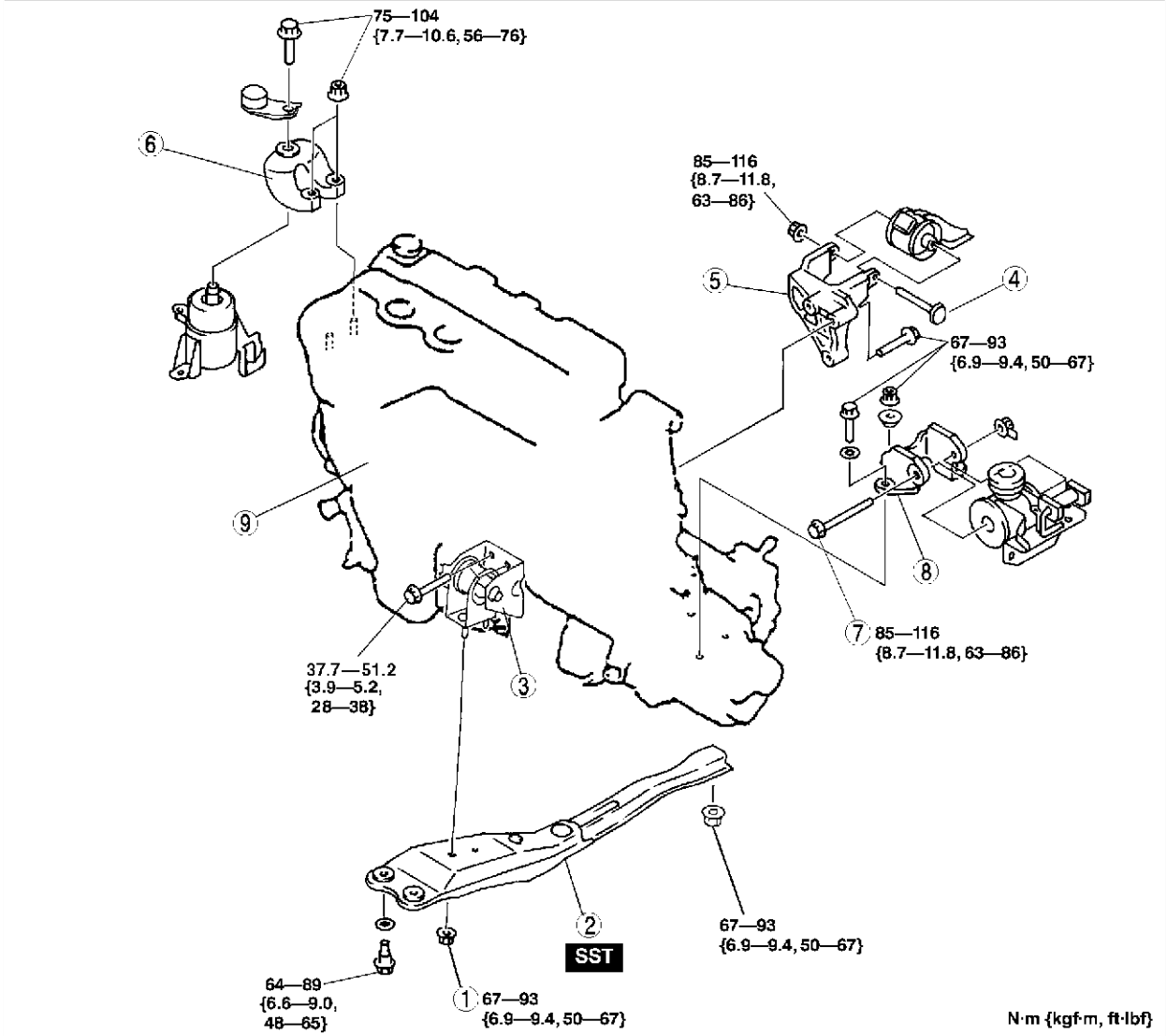

AME2224W001

1	No.2 Engine mount nut
2	Engine mount member (See B4–35 Engine Mount Member Removal Note) (See B4–37 Engine Mount Member Installation Note)
3	No.2 engine mount
4	No.1 Engine mount through bolt
5	No.1 Engine mount bracket (SeeB4–36 No.1 Engine Mount Bracket Installation Note)

6	No.3 Engine mount bracket (SeeB4–35 No.3 Engine Mount Removal Note) (See B4–36 No.3 Engine Mount Installation Note)
7	No.4 Engine mount through bolt
8	No.4 Engine mount bracket (See B4–36 No.4 Engine Mount Bracket Installation Note)
9	Engine, transaxle

Engine Mount Member Removal Note

1. Suspend the engine using the **SSTs**.

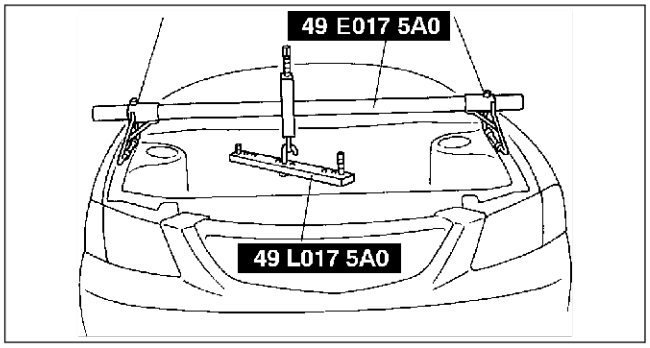

YMU110WAD

2. Remove the No.2 engine mount nut A.
3. Remove the engine mount member.

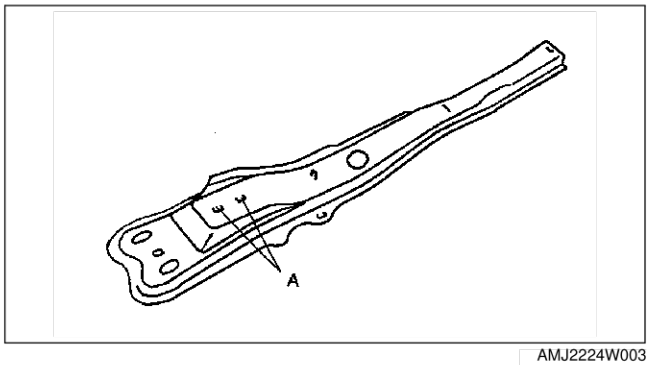

AMJ2224W003

No.3 Engine Mount Removal Note

1. Secure the engine and the transaxle using an engine jack and attachment as shown.

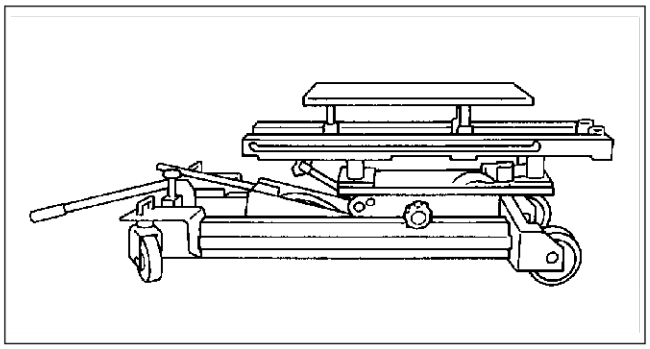

AMJ2224W004

2. Remove the **SSTs**.

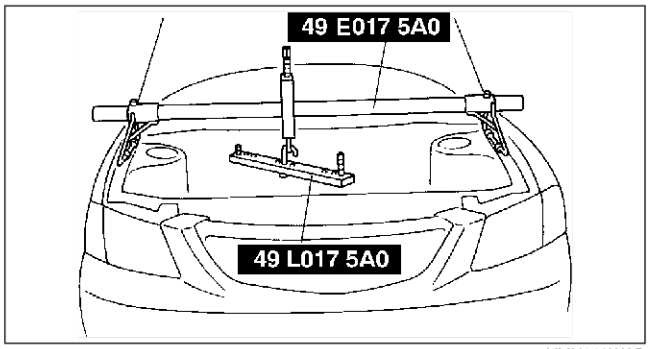

YMU110WAD

No.4 Engine Mount Bracket Installation Note

1. Secure the engine and the transaxle using an engine jack and attachment as shown.
2. Install the No.4 engine mount bracket.
3. Install the No.4 engine mount through bolts.

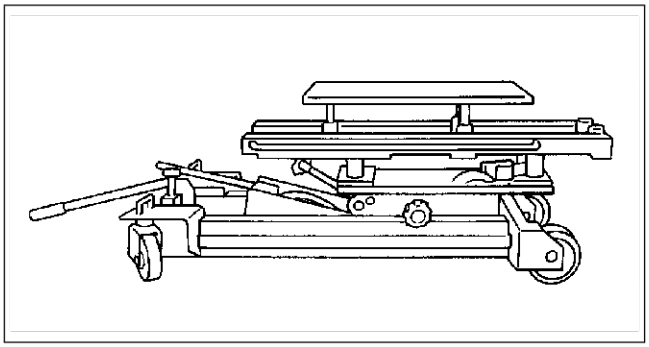

AMJ2224W004

4. Tighten the No.4 engine mount bolts and nut in the order indicated in the figure.

Bolt No.	Tightening torque (N·m {kgf·m, ft·lbf}
1—4	67—93 {6.9—9.4, 50—67}
5	85—116 {8.7—11.8, 63—86}

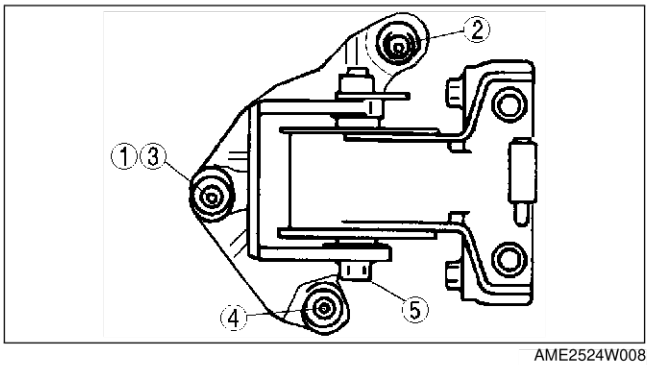

AME2524W008

No.3 Engine Mount Installation Note

1. Install the No.3 engine mount.
2. Tighten the No.3 Engine mount bolts in the order indicated in the figure.

Tightening torque
75—104 N·m {7.7—10.6 kgf·m, 56—76 ft·lbf}

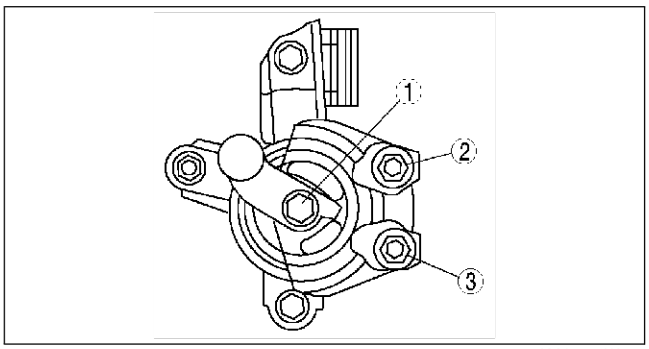

AMJ2224W009

3. Suspend the engine using the **SSTs**.
4. Remove the tool under the engine, transaxle.

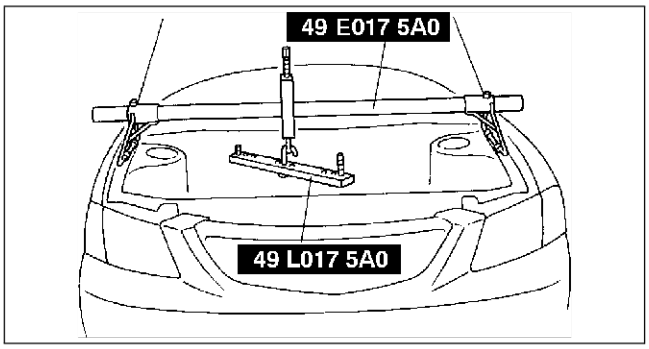

YMU110WAD

No.1 Engine Mount Bracket Installation Note

1. Install the No.1 engine mount bracket.
2. Tighten the No.1 engine mount through bolts.

Tightening torque
85—116 N·m {8.7—11.8 kgf·m, 63—86 ft·lbf}

Engine Mount Member Installation Note

1. Tighten the engine mount member bolt.

   Tightening torque
   64—89 N·m {6.6—9.0 kgf·m, 48—65 ft·lbf}

2. Tighten the No.2 engine mount nut A.

   Tightening torque
   67—93 N·m {6.9—9.4 kgf·m, 50—67 ft·lbf}

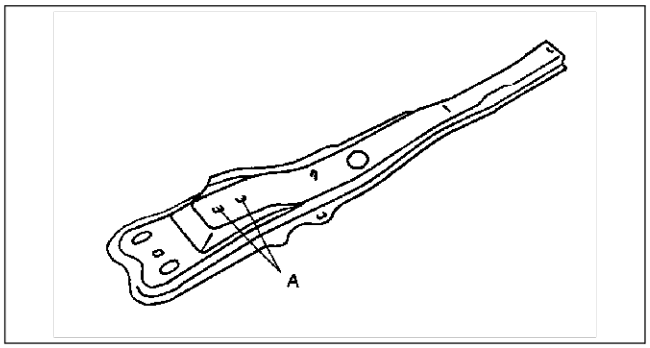

AMJ2224W003

3. Remove the **SSTs**.

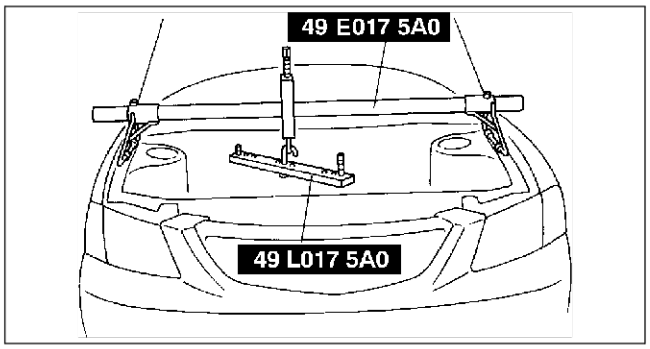

YMU110WAD

End Of Sta

ENGINE DISASSEMBLY/ASSEMBLY

AME252401001W02

1. Disconnect the engine and transaxle. (See J2–10 MANUAL TRANSAXLE REMOVAL/INSTALLATION.)
2. Remove the intake-air system. (See F5–66 INTAKE-AIR SYSTEM REMOVAL/INSTALLATION.)
3. Remove the exhaust system. (See F5–86 EXHAUST SYSTEM REMOVAL/INSTALLATION.)
4. Remove the generator. (See G–13 GENERATOR REMOVAL/INSTALLATION.)
5. Remove the clutch. (See H–10 CLUTCH UNIT REMOVAL/INSTALLATION.)
6. Remove the P/S oil pump.(See N–14 POWER STEERING OIL PUMP (MZR-CD (RF Turbo)) REMOVAL/INSTALLATION.)
7. Remove the vacuum pump. (See P–12 VACUUM PUMP REMOVAL/INSTALLATION (MZR-CD (RF Turbo)).)
8. Disassemble in the order indicated in the table.
9. Assemble in the reverse order of disassembly.

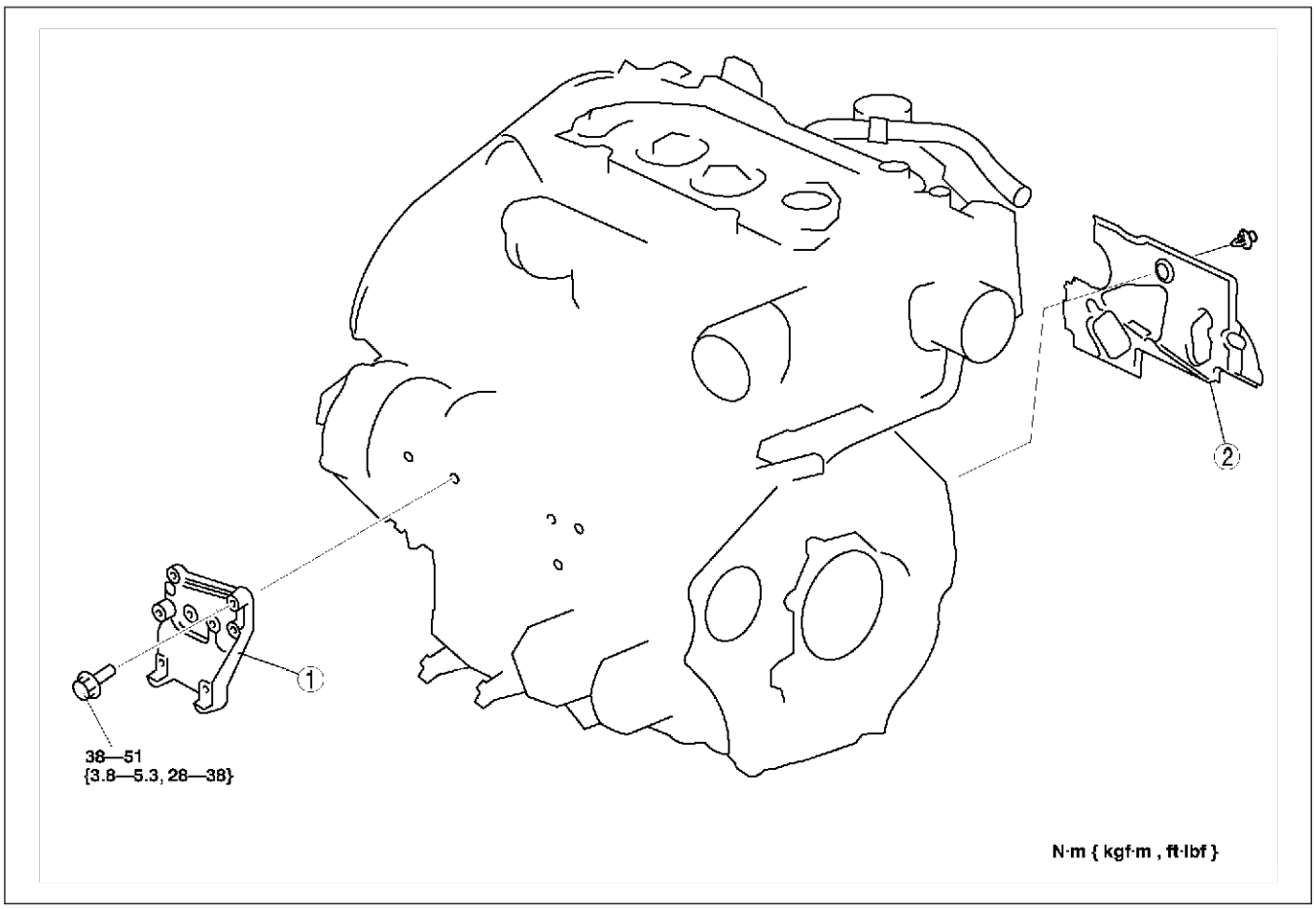

AME2524W001

1	A/C compressor bracket, Idler (See B4–38 A/C Compressor Bracket, Idler Installation Note)

2	Seal plate

A/C Compressor Bracket, Idler Installation Note

1. Tighten the A/C compressor bracket bolts in the order shown.

Tightening torque
38—51 N·m {3.8—5.3 kgf·m, 28—38 ft·lbf}

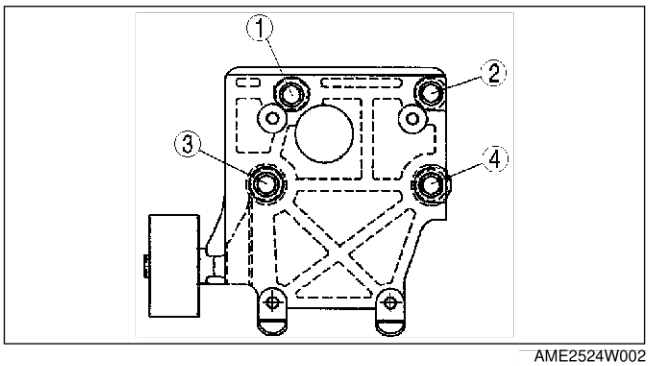

AME2524W002

End Of Sie

LUBRICATION SYSTEM

FEATURES

OUTLINE D-2
OUTLINE OF CONSTRUCTION D-2
FEATURES D-2
SPECIFICATIONS D-3
LUBRICATION SYSTEM D-4
STRUCTURAI VIEW D-4
LUBRICATION FLOW CHART D-6
OIL FILTER (L3) D-8
OIL COOLER (MZR-CD (RF Turbo)) D-10
OIL PAN (L3) D-10
OIL PUMP D-11
OIL STRAINER (L3) D-13
OIL JET VALVE (L3) D-13

SERVICE

OUTLINE D-14
SUPPLEMENTAL SERVICE INFORMATION D-14
OIL PRESSURE INSPECTION D-15
OIL PRESSURE INSPECTION D-15
ENGINE OIL D-16
ENGINE OIL INSPECTION D-16
ENGINE OIL REPLACEMENT D-16
OIL FILTER D-18
OIL FILTER REPLACEMENT D-18
OIL COOLER D-19
OIL COOLER REMOVAL/ INSTALLATION D-19
OIL PAN D-20
OIL PAN REMOVAL/ INSTALLATION D-20
OIL PUMP D-24
OIL PUMP REMOVAL/INSTALLATION D-24

OUTLINE

OUTLINE OF CONSTRUCTION

AME330202000W01

- With the addition of the L3 engine model, the lubrication system has been newly adopted. (European specs.)
- The construction and operation of the lubrication system for the new MPV (LW) AJ engine model is the same as the previous MPV (LW) GY engine model. (Australian, General (L.H.D. R.H.D.) specs.) (See MPV Training Manual 1666-1*-99F.)
- The construction and the operation of the lubrication system for the new MPV (LW) MZR-CD (RF Turbo) is the same as the current 626, 626 Station Wagon (GF, GW) RF Turbo engine model except for the following features. (European specs.) (See 626, 626 Station Wagon RF Turbo Workshop Manual Supplement 1614-10-98D.)

End Of Sie

FEATURES

AME330202000W02

Reduced weight

- Aluminum alloy oil pan (L3 engine model)
- Plastic oil strainer (L3 engine model)
- Oil filter cover made of resin (L3 engine model)

Improved lubrication and reliability

- Trochoid gear type oil pump (chain driven type) (L3 engine model)
- Water-cooled type oil cooler (L3 engine model)
- Oil jet valve has been adopted. (L3 engine model)

Modification to the engine figure

- Oil filter and oil cooler is adopted to the oil pan upper block. (MZR-CD (RF Turbo) engine model)

End Of Sie

SPECIFICATIONS

AME330202000W03

Recommended Engine oil

- The maintenance intervals on scheduled maintenance table (See GI–10 Scheduled maintenance table) can only be supported by the use of following oils.

Item			Specification							
			Petrol engine				Diesel engine			
			New MPV (LW)		Previous MPV (LW)		New MPV (LW)			Current 626, 626 Station Wagon (GF,GW)
			L3	AJ	GY		MZR-CD (RF Turbo)			RF Turbo
Lubrication system			Force-fed type							
Oil cooler			Water-cooled							
Oil pressure (Approximate quantity)	(kPa {kgf/cm^2, psi} [rpm])		300—549 {3.1—5.6, 44—80} [3,000]	138—310 {1.4—3.2, 20—45} [1,500]			147 {1.5, 21} min. [1,000] 343 {3.5, 50} min. [3,000]			
Oil pump	Type		Trochoid gear type							
	Relief pressure (Approximate quantity) (kPa {kgf/cm^2, psi})		500—600 {5.09—6.11, 72.6—87.0}	—			580—700 {5.9—7.1, 84.1—101.5} [3,000]			510—608 {5.2—6.2, 74—88} [3,000]
Oil filter	Type		Full-flow, paper element							
	Bypass pressure (Approximate quantity) (kPa kgf/cm^2, psi})		80—120 {0.9—1.2, 12.8—17.0}	—			78—118 {0.8—1.2, 11.3—17.1}			79—117 {0.8—1.2, 12—17}
Oil capacity (Approximate quantity)	Total (Dry engine) (L {US qt, Imp qt})		4.2 {4.4, 3.7}	5.7 {6.0, 5.0}			5.5 {5.8, 4.8}			5.4 {5.7, 4.8}
	Oil replacement (L {US qt, Imp qt})		3.1 {3.3, 2.7}	4.7 {5.0, 4.1}			4.8 {5.1, 4.2}			4.5 {4.8, 4.0}
	Oil and oil filter replacement (L {US qt, Imp qt})		3.5 {3.7, 3.1}	5.2 {5.5, 4.6}			5.0 {5.3 ,4.4}			4.7 {5.0, 4.1}
Engine oil	Grade	API	SJ	SL	SH,SJ, SL	SH, SJ	CF-4	CF-4	CD, CE, CF-4	CD
		ILSAC		GF-3	GF-2, GF-3	GF-2	—	—	—	—
		ACEA	A1 or A3	—	—	—	B1 or B3	B3	B3 or B4	—
	Viscosity (SAE)		5W-30	5W-20	5W-20, 5W-30, 10W-30	—	5W-30	10W-40	5W-30, 10W-30	5W-30, 10W-30
	Remarks		Mazda genuine DEXELIA oil	—	—	—	Mazda genuine DEXELIA oil		—	—

Bold frames: New specifications

End Of Sie

LUBRICATION SYSTEM

STRUCTURAL VIEW

AME333014100W01

L3

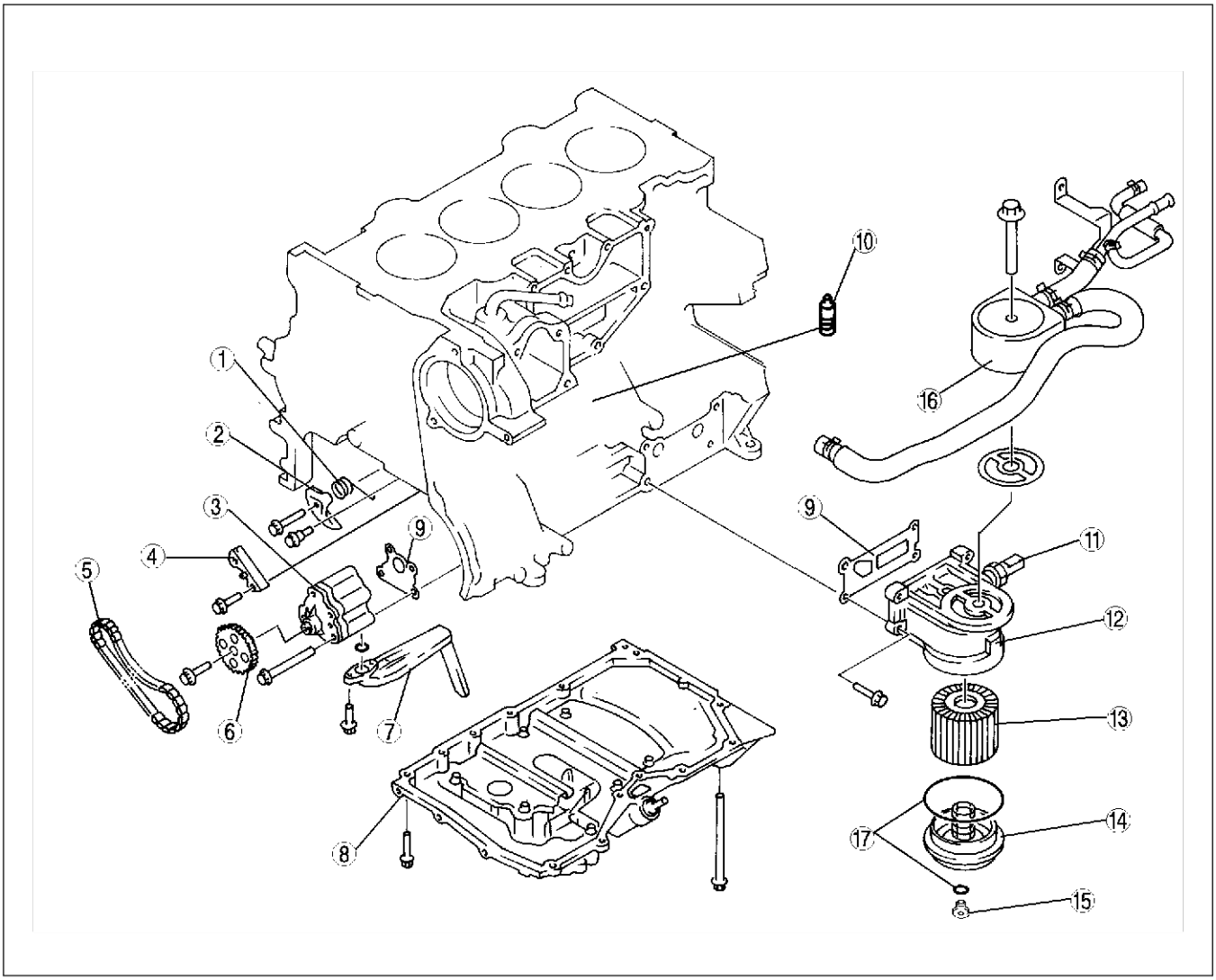

AME3300W201

1	Oil pump chain tensioner spring
2	Oil pump chain tensioner
3	Oil pump
4	Oil pump chain guide
5	Oil pump chain
6	Oil pump sprocket
7	Oil strainer
8	Oil pan
9	Gasket

10	Oil jet valve
11	Oil pressure switch
12	Oil filter adapter
13	Oil filter
14	Oil filter cover
15	Oil filter drain plug
16	Oil cooler
17	O-ring

MZR-CD (RF Turbo)

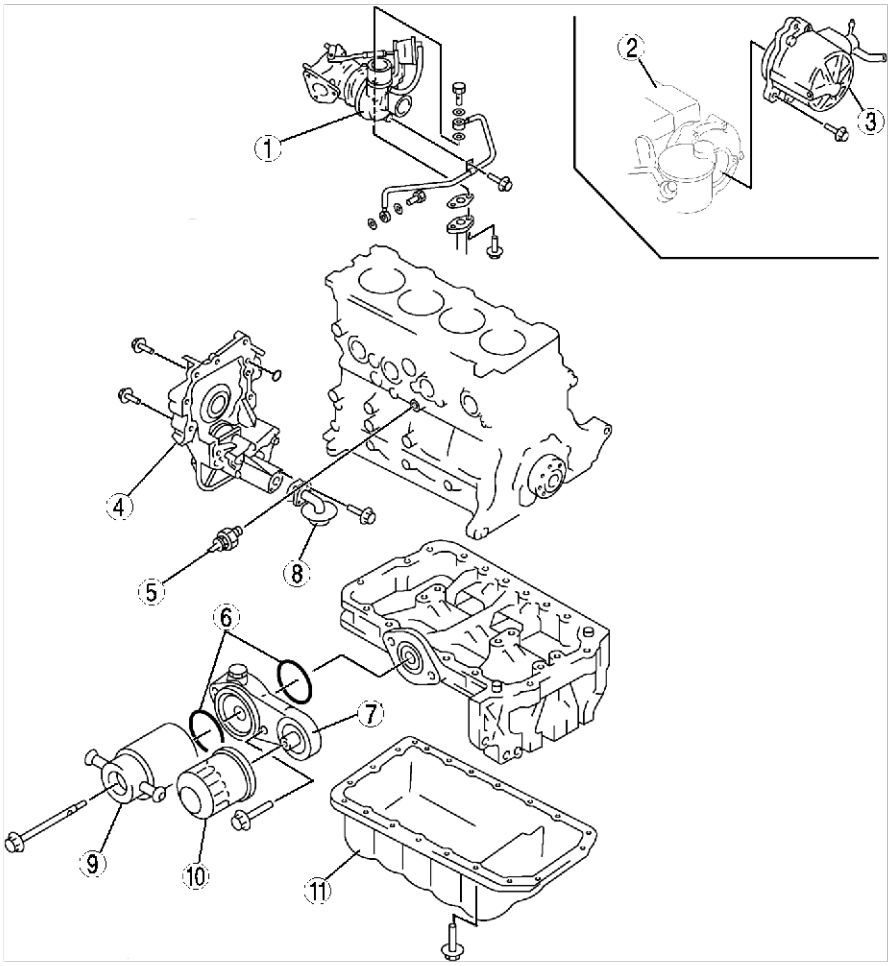

AME3300N001

1	Turbocharger
2	Cylinder head
3	Vaccum pump
4	Oil pump
5	Oil pressure switch
6	O-ring

7	Oil filter adapter
8	Oil strainer
9	Oil cooler
10	Oil filter
11	Oil pan

End Of Sie

LUBRICATION FLOW CHART

AME333014100W02

L3

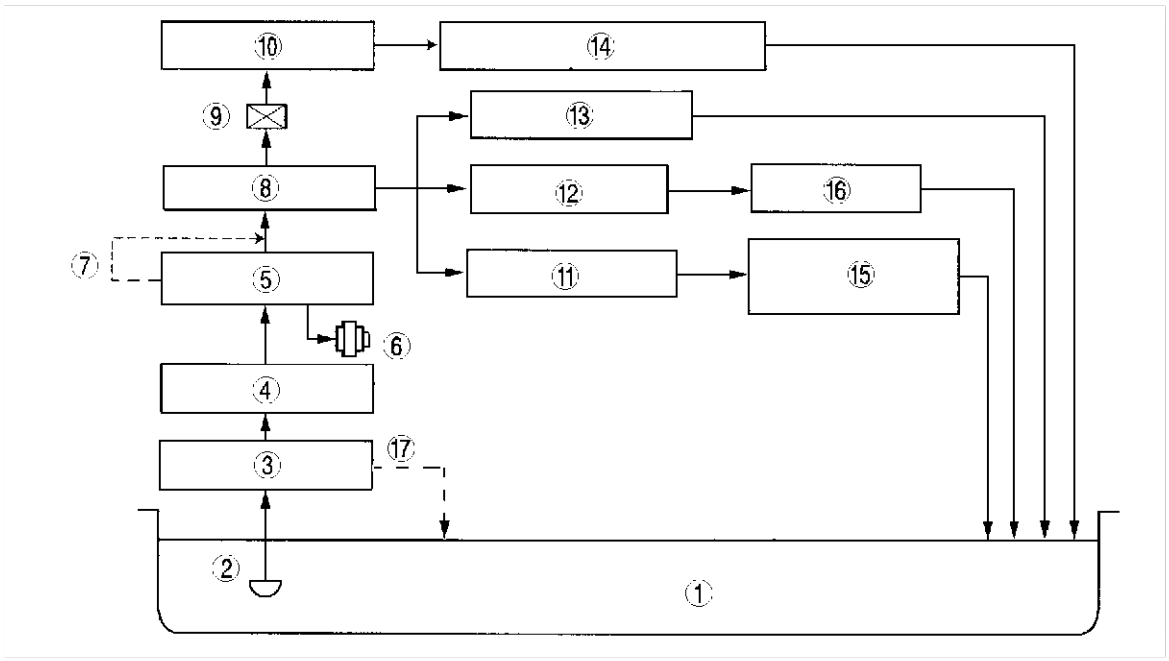

AME3300N002

1	Oil pan
2	Oil strainer
3	Oil pump
4	Oil cooler
5	Oil filter
6	Oil pressure switch
7	Oil filter bypass valve
8	Cylinder block
9	Orifice

10	Cylinder head
11	Main bearing
12	Oil jet valve
13	Oil pump chain tensioner
14	Camshaft
15	Crankshaft bearing, Connecting rod bearing
16	Piston
17	Oil pressure relief valve

MZR-CD (RF Turbo)

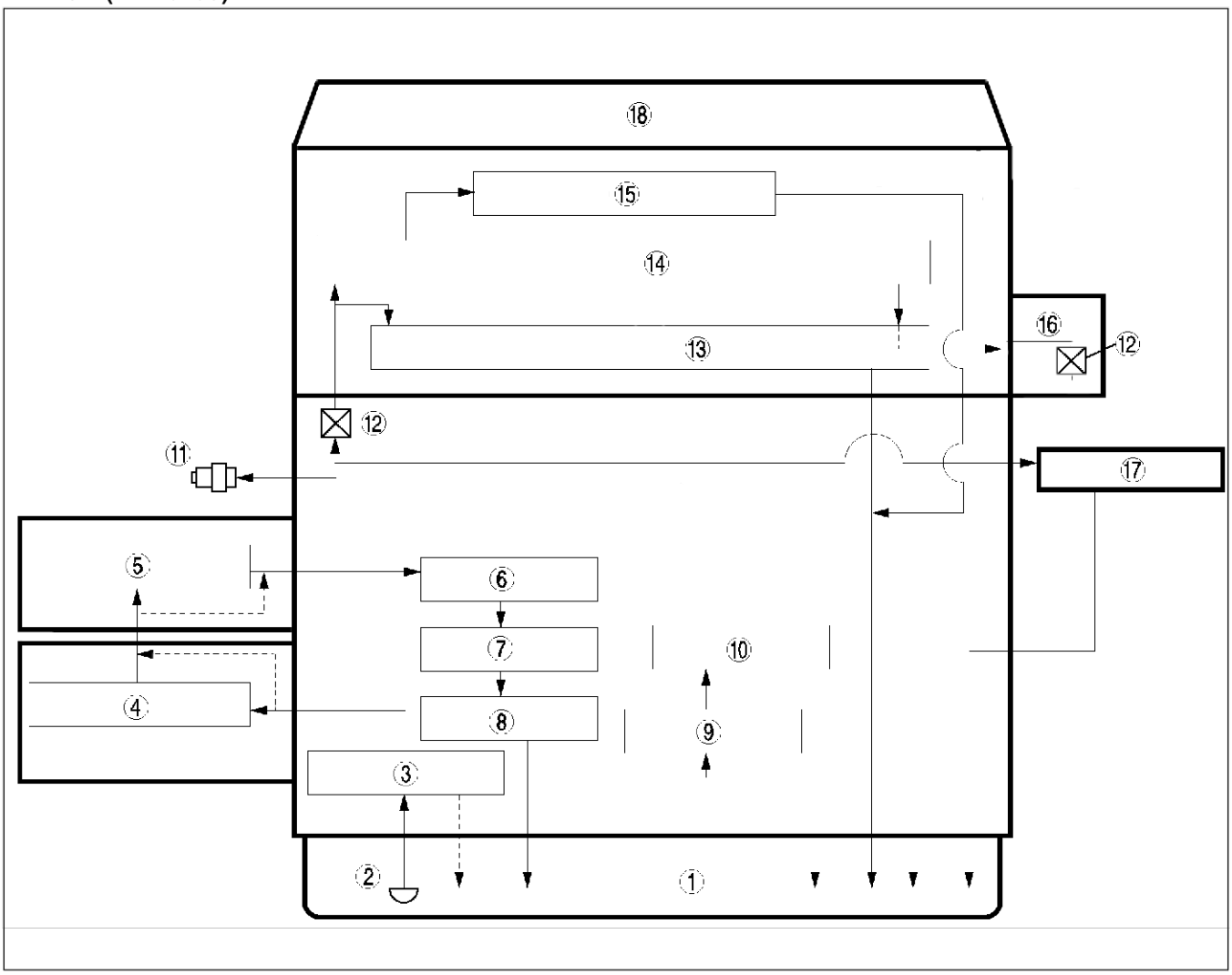

AME3300N005

1	Oil pan
2	Oil strainer
3	Oil pump
4	Oil cooler
5	Oil filter
6	Main bearing
7	Crankshaft
8	Connecting rod bearing
9	Oil jet valve

10	Piston
11	Oil pressure switch
12	Orifice
13	Camshaft
14	Rocker arm shaft
15	Rocker arm, rocker arm bridge
16	Vaccum pump
17	Turbocharger
18	Cylinder head

End Of Sie

OIL FILTER (L3)

AME333014100W03

Structure

- The oil filter is attached to the right side of the oil level gage (oil pan side) on cylinder block.
- The oil filter adapter has been adopted for weight reduction. The oil pressure switch is installed on the oil filter adapter.
- A resin oil filter has been adopted for weight reduction. A drain plug has been installed on the bottom of the oil filter to improve replacement serviceability.
- An environment-friendly oil filter made of incinerable polyester has been adopted. Only filter paper needs to be replaced.
- A water-cooled oil cooler has been adopted to reduce the engine oil degradation. Also, the exclusive use oil filter adapter has been adapted for the oil cooler.

OIL FILTER SPEC.

Outer diameter	(mm {in})	64.9—65.0 {2.555—2.559}
Height	(mm {in})	73.4—73.6 {2.88—2.90}

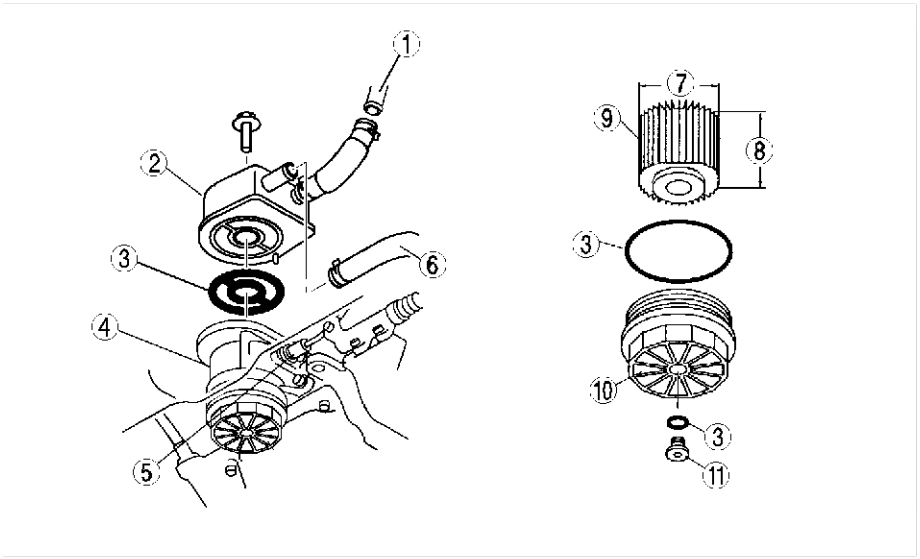

AME3300W104

1	To water outlet case
2	Oil cooler
3	O-ring
4	Oil filter adapter
5	Oil pressure switch
6	To thermostat

7	Diameter
8	Height
9	Oil filter
10	Oil filter cover
11	Oil filter drain plug

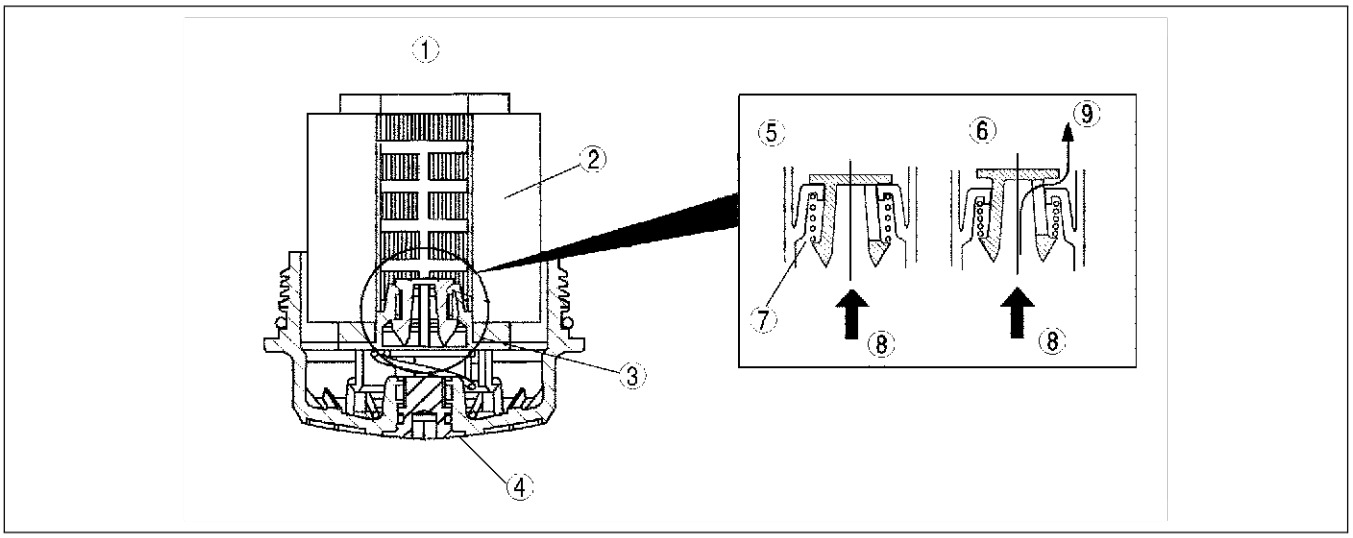

AME3300N013

1	Sectional view
2	Oil filter
3	Oil filter bypass valve
4	Oil filter cover
5	Normal

6	Bypass
7	Spring
8	Oil pressure
9	Oil passage

OIL FILTER (MZR-CD (RF Turbo))

- The oil filter is of a full-flow type with a paper element.

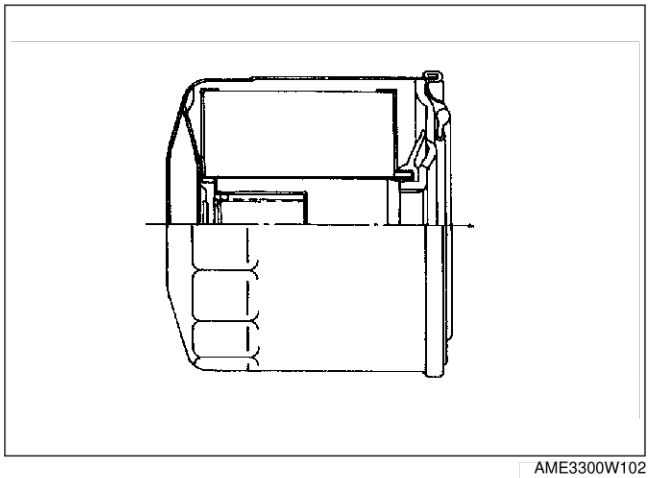

AME3300W102

End Of Sie

OIL COOLER (MZR-CD (RF TURBO))

AME333014100W04

Structure

- The oil cooler is attached to the right side of the oil filter.
- The oil cooler is a seven layer, water cooled type.
- The oil cooler lowers the engine oil temperature to prevent engine oil premature deterioration.

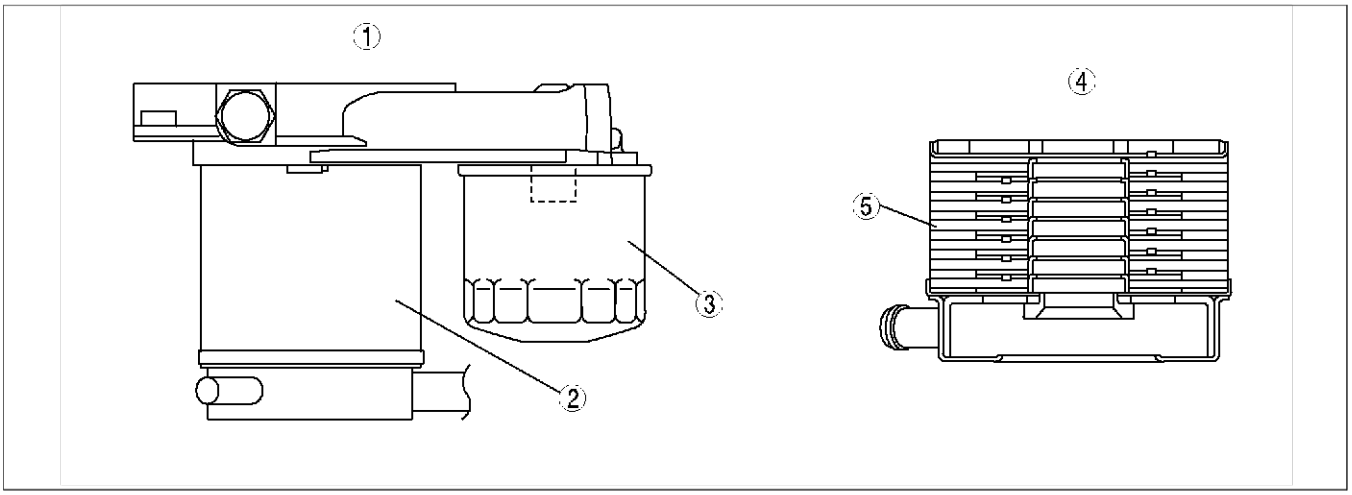

AME3330W101

1	Exterior view
2	Oil cooler
3	Oil filter

4	Sectional view
5	Layer

End Of Sie

OIL PAN (L3)

AME333014100W05

Structure

- An aluminum alloy oil pan has been adopted for weight reduction. A silicon sealant with excellent sealing qualities has been also adopted.
- Oil pan baffle plates have been adopted inside the oil pan to stabilize engine oil diffusion by crankshaft rotation and oil level when the vehicle rolls.

1	Oil pan baffle plate

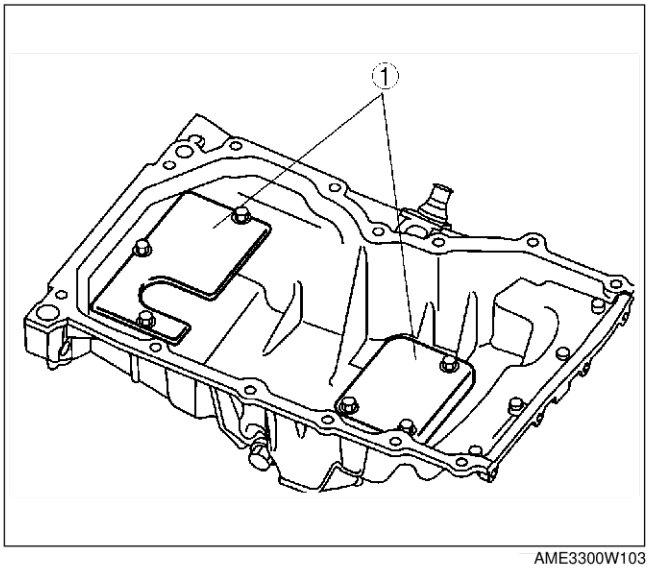

AME3300W103

End Of Sie

OIL PUMP

AME333014100W06

Structure

- The oil pump is installed inside the engine front cover. The crankshaft drives the inner rotor through the oil pump chain and oil pump sprocket.
- The oil pump consists of the oil pump sprocket, oil pump chain, oil pump chain guide, oil pump chain tensioner, and oil pump chain tensioner spring.

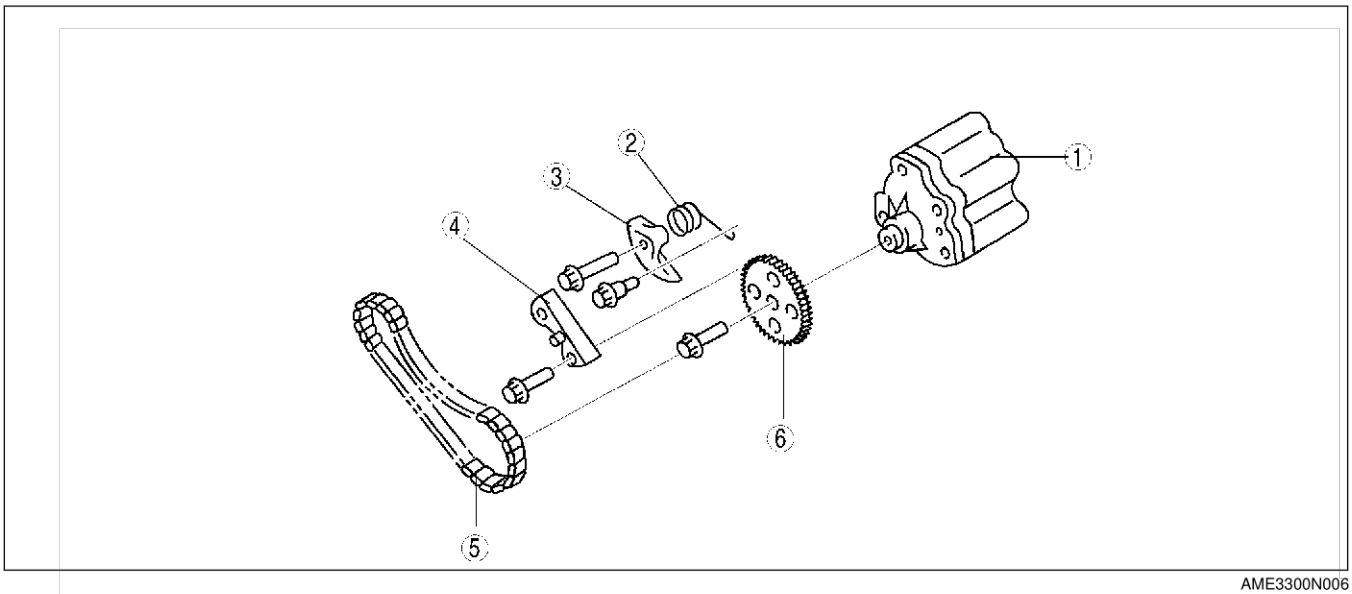

AME3300N006

1	Oil pump body (relief valve inside)
2	Oil pump chain tensioner spring
3	Oil pump chain tensioner

4	Oil pump chain guide
5	Oil pump chain
6	Oil pump sprocket

- An efficient and compact 5-lobe epitrochoid and 6-flank inner envelop type gear have been adopted on the oil pump.
- The oil pump consists of the inner and outer rotors, relief valve and oil pump body.
- The oil pump cannot be disassembled. If there is an oil pump malfunction, replace it as a unit.

OIL PUMP SPEC.

Item	Engine speed [rpm]	Specification
Oil discharge pressure [Oil temperature: 100°C {212°F}] (kPa {kgf/cm^2, psi})	1,500	116—302 {1.2—3.1, 16.8—43.8}
	3,000	300—549 {3.1—5.6, 44—80}

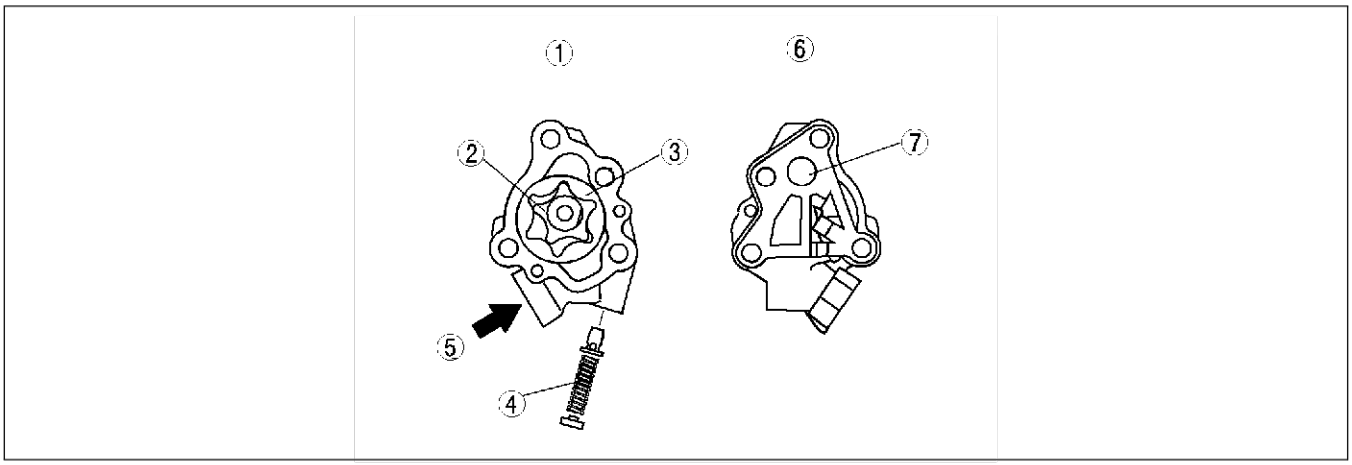

AME3300N007

1	Front
2	Inner rotor
3	Outer rotor
4	Relief valve assembly

5	Oil in
6	Back
7	Oil out

- A silent chain (link connecting type) has been adopted to the oil pump chain to reduce chain operation noise when the chain and the sprocket engage.
- The engine oil in the engine front cover lubricates the oil pump chain. The wear resistance has been improved by the nitriding processing of the pin constructing the oil pump chain.
- The durability has been improved by heating the sintering material on the oil pump sprocket inside a furnace.

OIL PUMP CHAIN SPEC.

Item		Specification
Pitch size	(mm {in})	6.35 {0.25}
Number of pitches		68

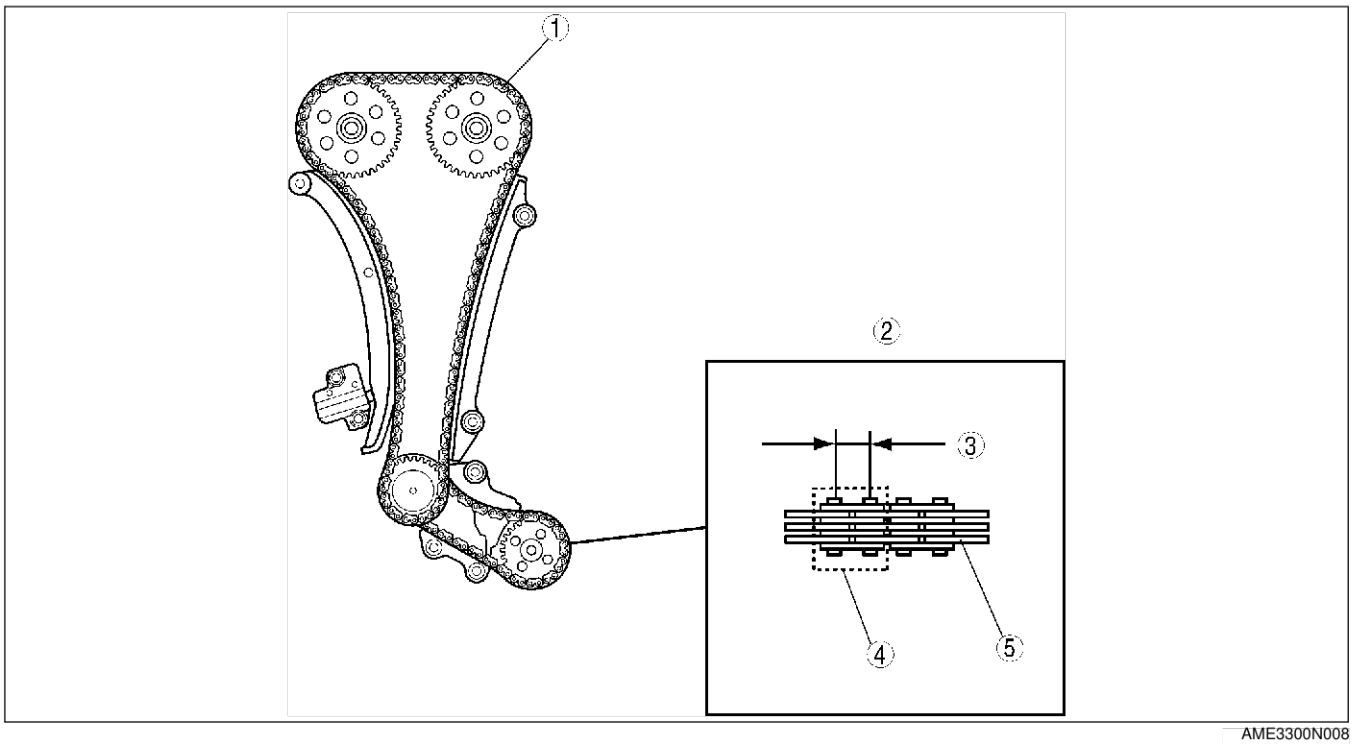

AME3300N008

1	Timing chain
2	Oil pump driven chain
3	Pitch size

4	Pitch
5	Link

- The oil pump sprocket is heat forged from sintered metals to improve durability.

OIL PUMP SPROCKET SPEC.

Item		Specification
		L3
Outer diameter	(mm {in})	46.46 {1.829}
Drive tooth width	(mm {in})	5.7 {0.23}

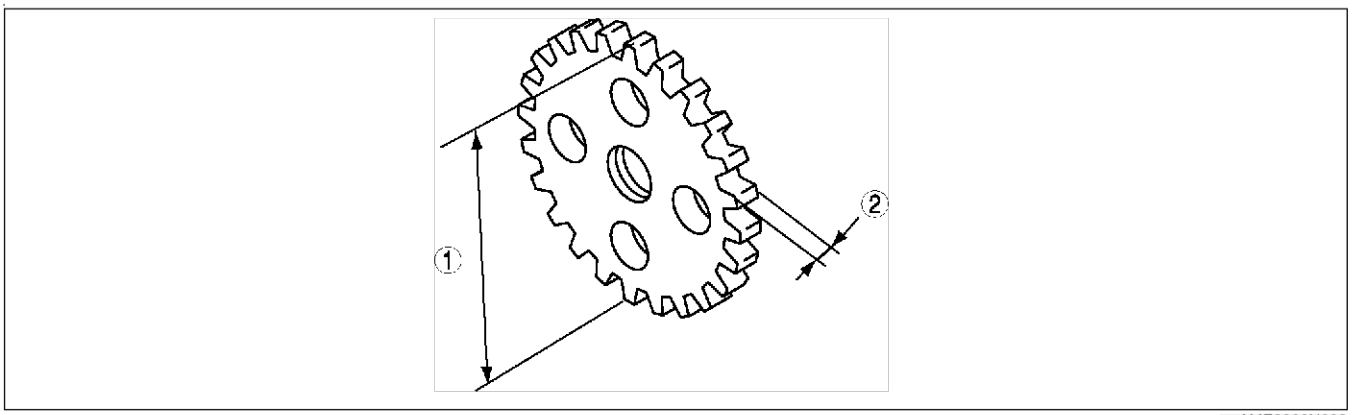

AME3300N009

1	Outer diameter

2	Drive tooth width

OIL STRAINER (L3)

AME333014100W07

Structure

- A plastic oil strainer with a resin filter in the middle of the strainer has been adopted for weight reduction.

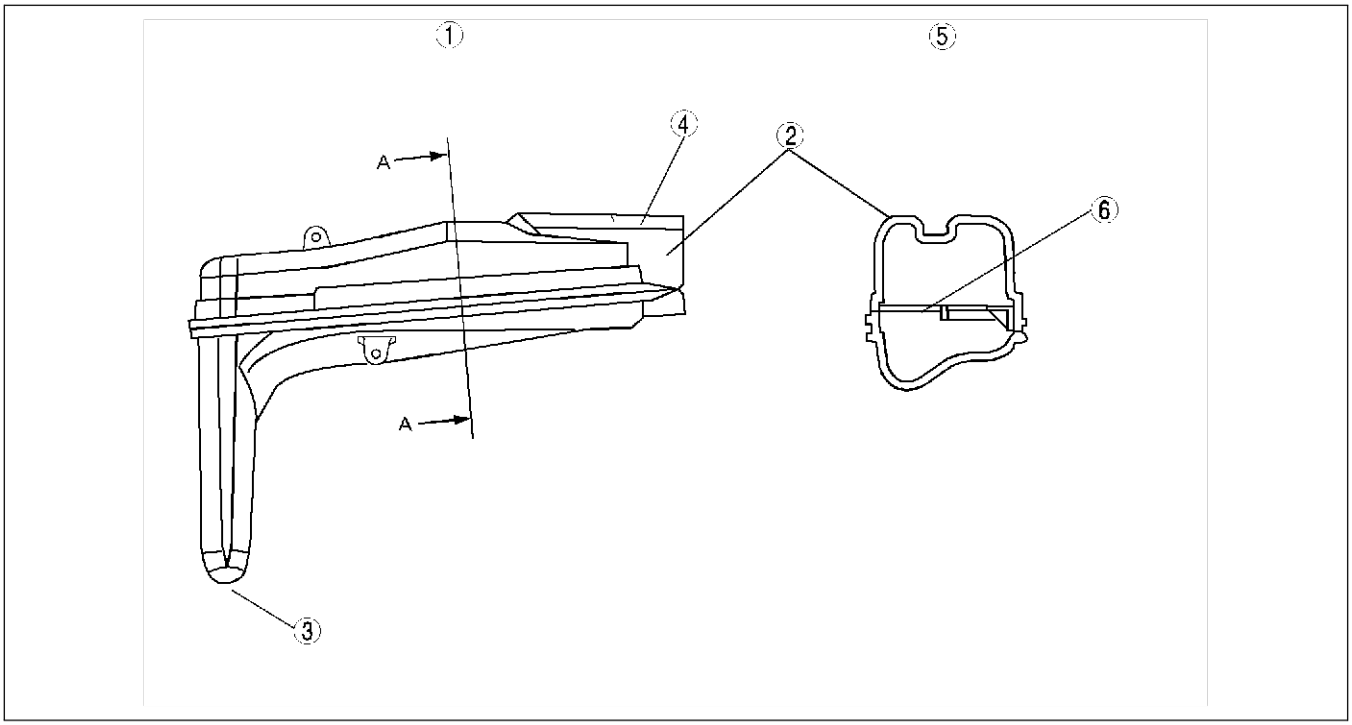

AME3300N011

1	Exterior view
2	Oil strainer
3	Oil supply inlet

4	Oil pump attachment side
5	A-A sectional view
6	Filter

OIL JET VALVE (L3)

AME333014100W08

Structure

- The oil jet valves are installed in the cylinder block (in the main journal). The oil jet valve nozzles are installed pointed to the back of each piston.
- The oil jet valves are designed to maintain optimum oil pressure in the engine by controlling the oil injection depending on the oil pressure on the oil jet valve.

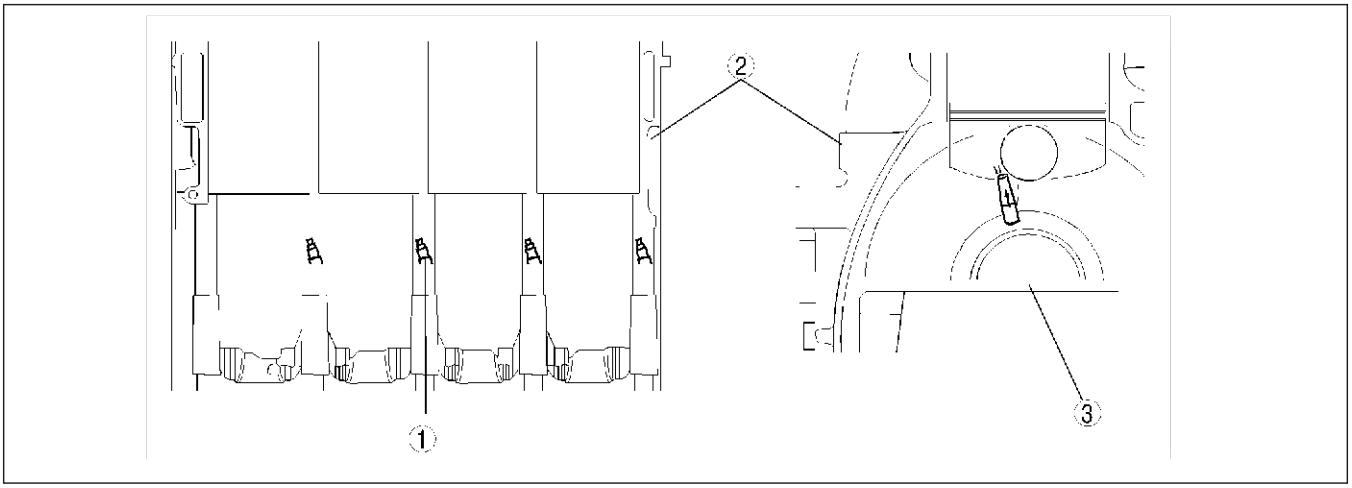

AME3300N014

1	Oil jet valve
2	Cylinder block

3	Crankshaft

Operation

- The oil passage to the nozzle and is opened and closed by the oil pressure applied to the check-ball in the oil jet valve controls oil injection start and stop.
- Oil pressure greater than the specified value applied to the check-ball in the oil jet valve opens the oil passage to the spring-pressed nozzle, starting injection. Conversely, oil pressure less than the specified value applied to the check-ball blocks the jet valve by spring force, stopping injection.

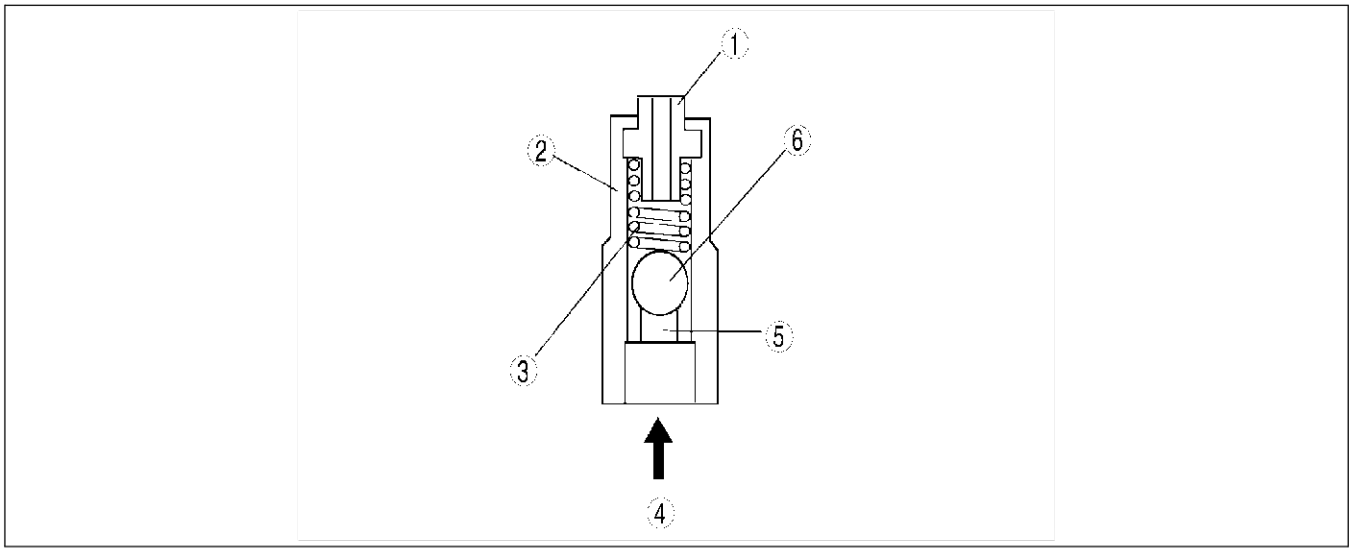

AME3300N015

1	Nozzle
2	Oil jet valve body
3	Spring

4	Oil
5	Oil passage
6	Check ball

End Of Sie

OUTLINE

SUPPLEMENTAL SERVICE INFORMATION

AME330202000W04

- The following changes and/or additions have been made since publication of the MPV Workshop Manual (1666-1*-99F).
- For the new MPV (LW) AJ engine model, procedures are the same with the previous MPV (LW) GY engine model except for the following.

Oil pressure

- Inspection procedure has been adopted. (L3 and MZR-CD (RF Turbo) engine models)

Engine oil

- Replacement procedure has been adopted.

Oil filter

- Replacement procedure has been adopted. (L3 and MZR-CD (RF Turbo) engine models)

Oil cooler

- Removal/Installation procedure has been adopted. (L3 and MZR-CD (RF Turbo) engine models)

Oil pan

- Removal/Installation procedure has been adopted. (L3 and MZR-CD (RF Turbo) engine models)

Oil pump

- Removal/Installation procedure has been adopted. (L3 and AJ engine models)

End Of Sie

OIL PRESSURE INSPECTION

OIL PRESSURE INSPECTION

AME331001003W01

L3, MZR-CD (RF Turbo)

Warning

- **Continuous exposure to USED engine oil has caused skin cancer in laboratory mice. Protect your skin by washing with soap and water immediately after working with engine oil.**
- **Hot engines and engine oil can cause severe burns. Turn off the engine and wait until it and the engine oil have cooled.**

1. Remove the oil pressure switch.
2. Screw the **SST** into the oil pressure switch installation hole.

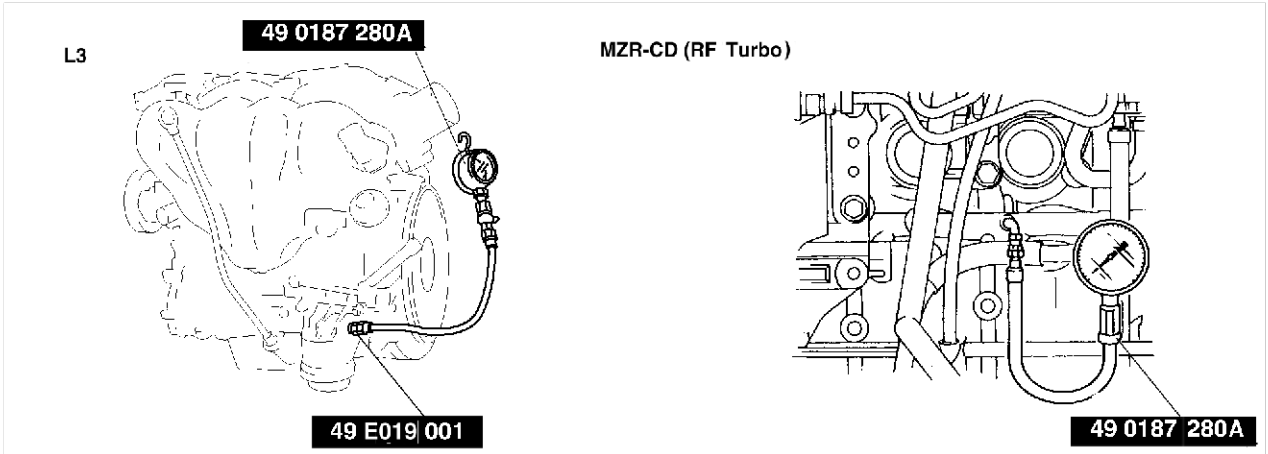

AME3310W001

3. Warm up the engine to normal operating temperature.
4. Run the engine at the specified speed, and note the gauge readings.
   - If the pressure is not as specified, inspect for the cause and repair or replace as necessary.

Oil pressure

L3: 300—549kPa {3.1— 5.6 kgf/cm^2, 44—80 psi} [3,000 rpm]
MZR-CD (RF Turbo):
147 kPa {1.5 kgf/cm^2, 21psi} min. [1,000 rpm]
343 kPa {3.5 kgf/cm^2, 50 psi} min. [3,000 rpm]

Note

- The oil pressure can vary with oil viscosity and temperature.

5. Stop the engine and wait until it is cool.
6. Remove the **SST**.

Caution

- **Any sealant stuck at the end of the oil pressure switch can cause operation malfunction of the oil pressure switch.**
  Be sure there is no sealant at the end of the oil pressure switch.

7. Apply silicone sealant to the oil pressure switch threads as shown.

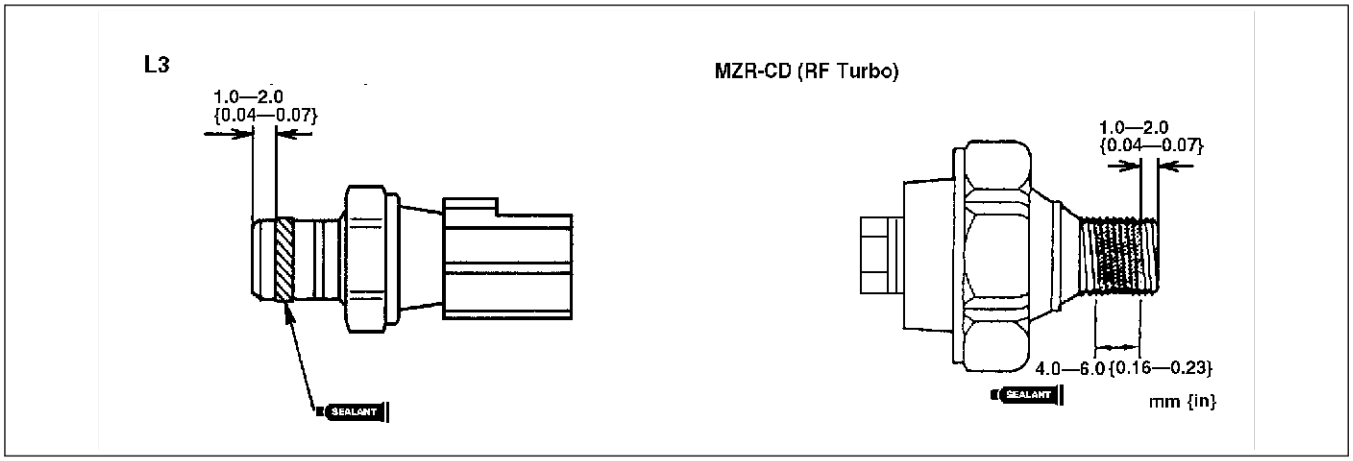

AME3310W002

8. Install the oil pressure switch.

Tightening torque
12—17 N·m {1.2—1.8 kgf·m, 9—13 ft·lbf}

9. Install the intake manifold bracket.
10. Start the engine and inspect for oil leakage.

End Of Sie

ENGINE OIL

ENGINE OIL INSPECTION

AME331214001W01

1. Position the vehicle on level ground.
2. Warm up the engine to normal operating temperature.
3. Stop the engine and wait for **5 min.**
4. Verify that the oil level is between the MIN and MAX marks (AJ and L3 engine models), L and F marks (MZR-CD (RF Turbo) engine model) on the dipstick and check the engine oil condition.
   - If the oil level is below the MIN mark, add genuine motor oil.
   - If necessary, replace with genuine engine oil.

End Of Sie

ENGINE OIL REPLACEMENT

AME331214001W02

Warning
- **Hot engines and engine oil can cause severe burns. Turn off the engine and wait until it and the engine oil has cooled.**
- **A vehicle that is lifted but not securely supported on safety stands is dangerous. It can slip or fall, causing death or serious injury. Never work around or under a lifted vehicle if it is not securely supported on safety stands.**
- **Continuous exposure to USED engine oil has caused skin cancer in laboratory mice. Protect your skin by washing with soap and water immediately after working with engine oil.**

Caution
- **In case you spill engine oil on the front pipe, wipe it off completely. If you fail to wipe the spilled oil, it will produce a white smoke because of the heat.**

1. Position the vehicle on level ground.
2. Remove the oil filler cap .
3. Remove the oil pan drain plug.
4. Drain the oil into a container.
5. Inspect the seal rubber of the oil pan drain plug and make sure there are no cracks or damage.
   — If necessary, replace the oil pan drain plug.

6. Clean the flange surface (seal rubber) of the oil pan drain plug, then install the oil pan drain plug. (L3, AJ engine model) Install the oil pan drain plug with new washer. (MZR-CD (RF-Turbo) engine model)

Tightening torque
L3, AJ: 22—30 N·m {2.2—3.1 kgf·m, 16—22 ft·lbf}
MZR-CD (RF Turbo): 12—17 N·m {1.2—1.8 kgf·m, 9—13 ft·lbf}

Note
- The amount of residual oil in the engine can vary with the replacement method, oil temperature, etc. Verify the oil level after engine oil replacement.

7. Refill the engine with the specified type and amount of engine oil.

Oil capacity (Approximate quantity)

L {US qt, Imp qt}

Item	Engine		
	L3	AJ	MZR-CD (RF Turbo)
Total (dry engine)	4.2 {4.4, 3.7}	5.7 {6.0, 5.0}	5.5 {5.8, 4.8}
Oil replacement	3.1 {3.3, 2.7}	4.7 {5.0, 4.1}	4.8 {5.1, 4.2}
Oil and oil filter replacement	3.5 {3.7, 3.1}	5.2 {5.5, 4.6}	5.0 {5.3, 4.4}

Note
- The maintenance intervals on scheduled maintenance table (See GI–10 Scheduled maintenance table) can only be applied with the use of following oils.

Recommended Engine Oil

Item			Specification					
			L3		AJ	MZR-CD (RF Turbo)		
Engine oil	Grade	API	SJ	SL	SH,SJ, SL	CF	CF	CD, CE, CF-4
		ILSAC		GF-3	GF-2, GF-3	—	—	—
		ACEA	A1 or A3	—	—	B1 or B3	B3	B3 or B4
	Viscosity (SAE)		5W-30	5W-20	5W-20, 5W-30, 10W-30	5W-30	10W-40	5W-30, 10W-30
	Remarks		Mazda genuine DEXELIA oil	—	—	Mazda genuine DEXELIA oil		—

8. Refit the oil filler cap.
9. Start the engine and inspect for oil leakage.
   - If the oil leaks, specify the faulty part and repair or replace it.
10. Inspect the oil level.
    - If necessary, add oil. (See D–16 ENGINE OIL INSPECTION.)

End Of Sta

OIL FILTER

OIL FILTER REPLACEMENT

AME331414300W01

Warning
- **Continuous exposure with USED engine oil has caused skin cancer in laboratory mice. Protect your skin by washing with soap and water immediately after this work.**
- **Hot engines and engine oil can cause severe burns. Turn off the engine and wait until it and the engine oil have cooled.**

L3

Caution
- **To avoid the damage to the oil filter, use only specified oil filter.**

1. Loosen the oil filter drain plug. (Don't remove.)
2. Loosen the filter cover for 1 turn using a commercially available, cap-type oil filter wrench (diameter- **74 mm {2.9 in}**).
3. Remove the oil filter drain plug, and drain the engine oil.

Note
- Oil could be easily drained when the air is in the filter.

4. Loosen the oil filter cover for another 1 turn.

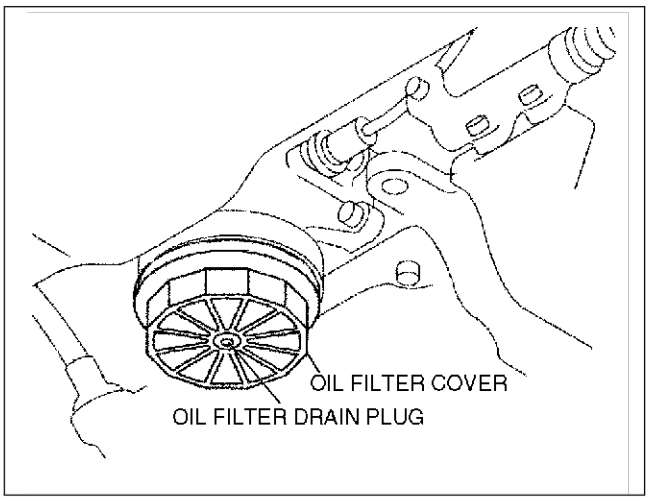

AME3314W001

5. Remove the oil filter cover and the oil filter.
6. Use a clean rag to wipe off the mounting surface on the oil filter adapter and the oil filter cover.
7. Apply clean engine oil to the new O-ring of the oil filter cover.
8. Apply clean engine oil to the new O-ring of the oil filter drain plug.
9. Install the oil filter, oil filter drain plug, and oil filter cover.
10. Tighten the oil filter cover and oil filter drain plug.

Tlghtening torque:
Oil filter cover: 30—35 N·m {3.0—3.6 kgf·m, 22.2—25.8 ft·lbf}
Oil filter drain plug: 9—10 N·m {91.8—101.9 kgf·cm, 79.6—88.4 in·lbf}

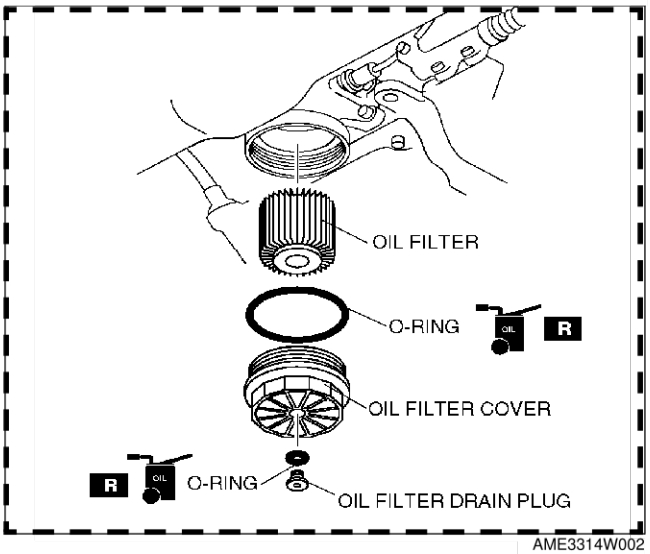

AME3314W002

11. Remove the dipstick and verify that the oil level is between the MIN and MAX marks on the dipstick.
    - If the oil level is below the MIN mark, add oil.
12. Start the engine and inspect for oil leakage.
    - If the oil leaks, specify the faulty part and repair or replace it.
13. Inspect the oil level.
    - If necessary, add oil. (See D–16 ENGINE OIL INSPECTION.)

End Of Sie

MZR-CD (RF Turbo)

1. Remove the oil filter using the filter wrench.
2. Use a clean rag to wipe off the mounting surface on the oil filter.
3. Apply clean engine oil to the O-ring of a new oil filter.
4. Using the filter wrench, tighten the filter according to the installation procedure indicated on the side of the filter or packing box.
5. Start the engine and inspect for oil leakage.
   - If the oil leaks, specify the faulty part and repair or replace it.
6. Inspect the oil level.
   - If necessary, add oil. (See D–16 ENGINE OIL INSPECTION.)

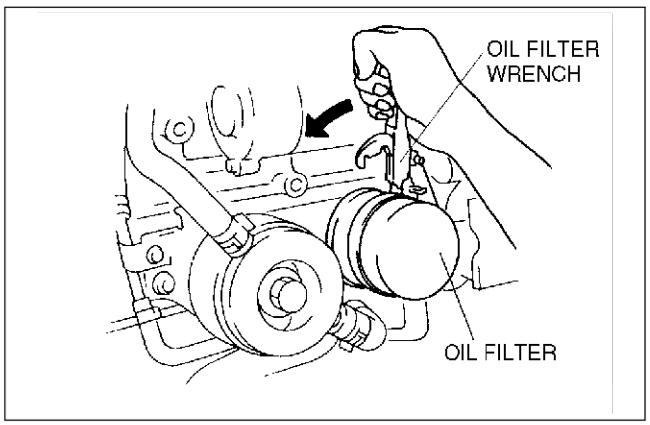

AME3314W004

End Of Sta

D

OIL COOLER

OIL COOLER REMOVAL/INSTALLATION

AME331819900W01

L3, MZR-CD (RF Turbo)

1. Disconnect the negative battery cable.
2. Drain the engine coolant. (See E–10 ENGINE COOLANT REPLACEMENT.)
3. Remove the oil filter cover. (MZR-CD (RF Turbo) engine model) (See D–18 OIL FILTER REPLACEMENT.)
4. Remove in the order indicated in the table.
5. Install in the reverse order of the removal.
6. Refill the engine coolant.(See E–10 ENGINE COOLANT REPLACEMENT.)
7. Inspect the oil level.
   - If necessary, add oil. (See D–16 ENGINE OIL INSPECTION.)
8. Start the engine and inspect for oil leakage.
   - If the oil leaks, specify the faulty part and repair or replace it.

1	Water hose
2	Oil cooler

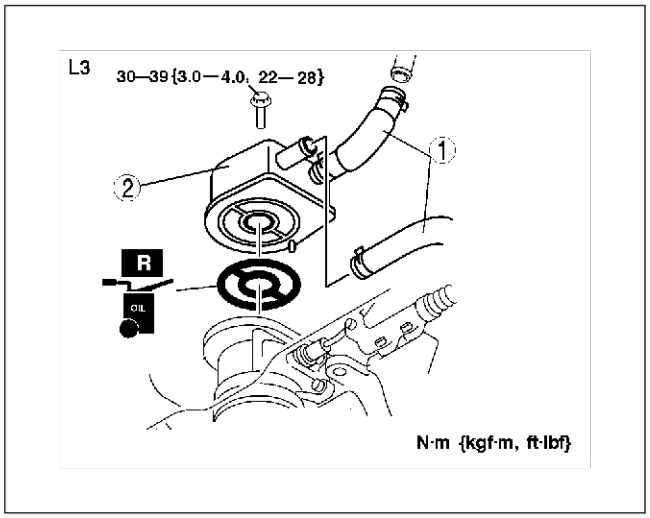

AME3318W002

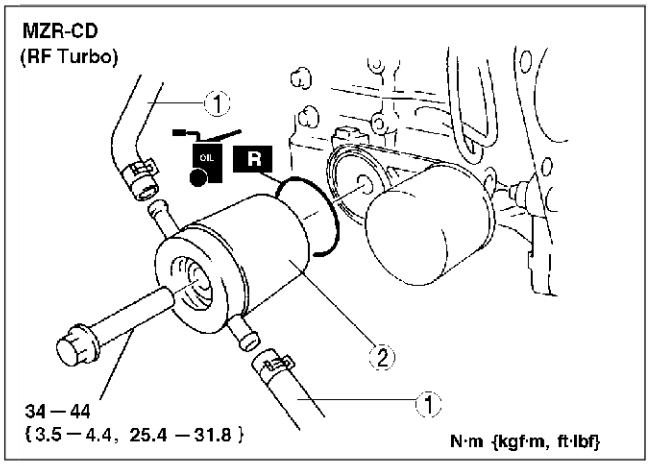

AME3318W003

End Of Ste

OIL PAN

OIL PAN REMOVAL/INSTALLATION

AME332010040W01

Warning

- **Hot engine and engine oil can cause severe burns. Turn off the engine and wait until it and the engine oil have cooled.**

L3

1. Disconnect the negative battery cable.
2. Drain the engine oil. (See D–16 ENGINE OIL REPLACEMENT.)
3. Remove the front cover. (See B3–32 TIMING CHAIN REMOVAL/INSTALLATION.)
4. Remove the timing chain. (See B3–32 TIMING CHAIN REMOVAL/INSTALLATION.)
5. Remove in the order indicated in the table.
6. Install in the reverse order of removal.
7. Fill with the specified amount and type of engine oil. (See D–16 ENGINE OIL INSPECTION.)
8. Start the engine and inspect for engine oil leakage.

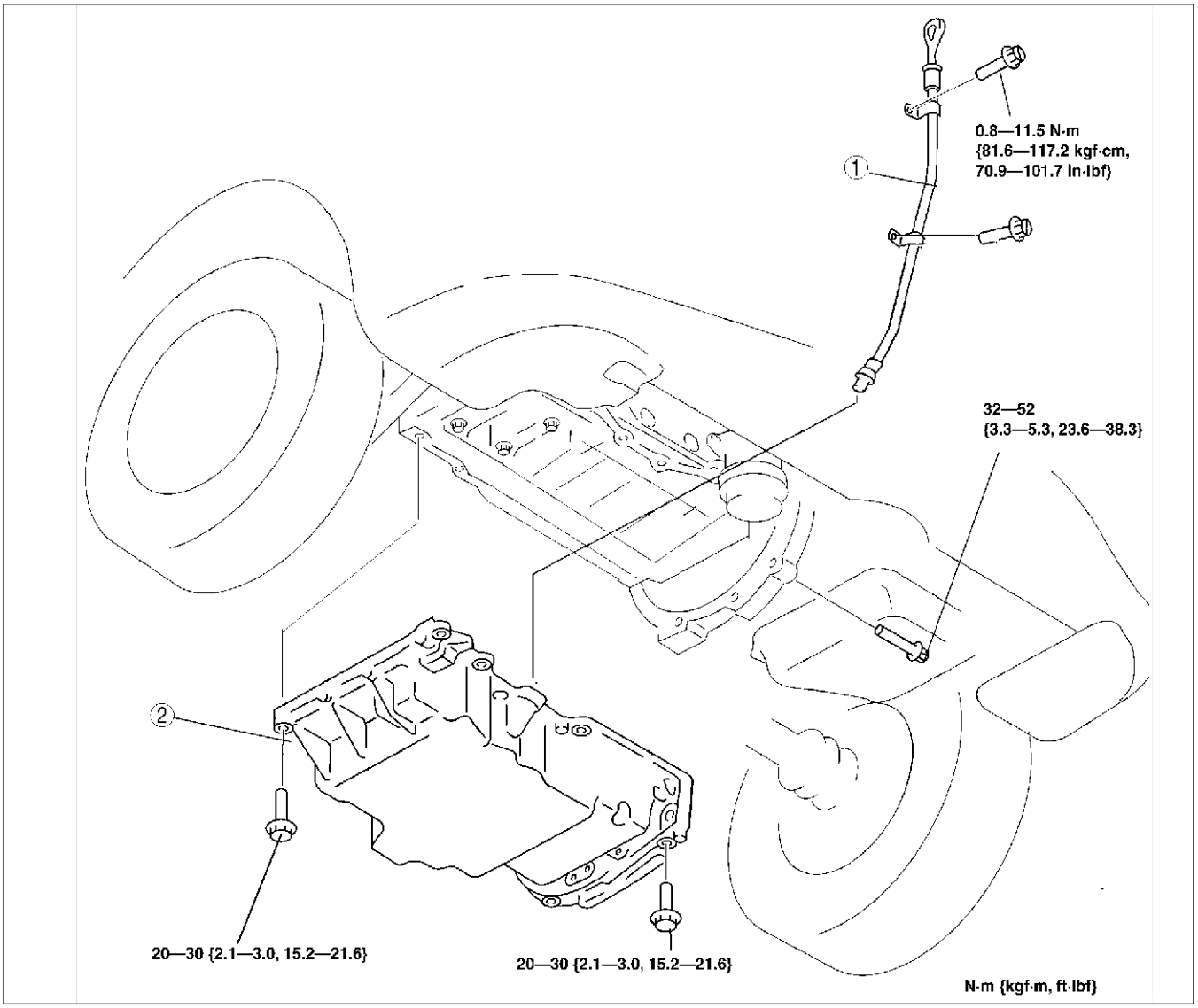

AME3320W004TIF

1	Oil level gage pipe

2	Oil pan (See D–21 Oil Pan Installation Note (L3))

Oil Pan Installation Note (L3)

Caution
- **If the bolts are reused, remove the old sealant from the bolt threads. Tightening a bolt that has old sealant on it can cause bolt hole damage.**

1. Use the square ruler to straighten the oil pan and the cylinder block attachment on the front cover side.
2. Apply silicone sealant to the oil pan along the inside of the bolt holes and overlap the end.

Thickness
2.5mm {0.099in}

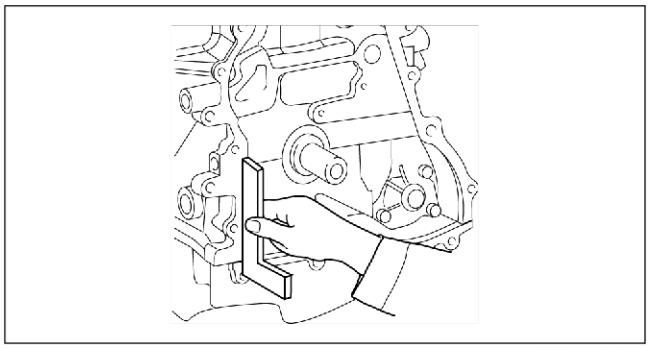

AME3320W003

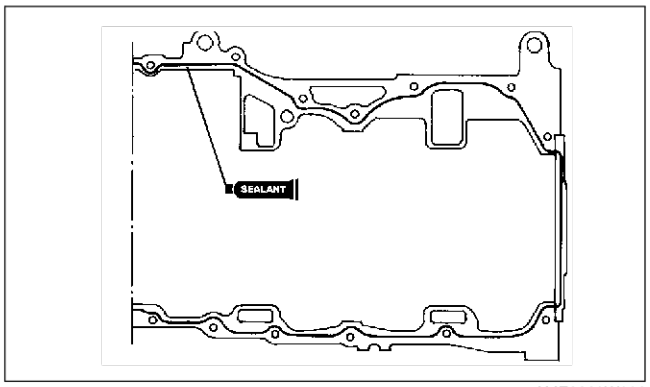

AME3320W002

3. Tighten the bolts in the order indicated in the figure.

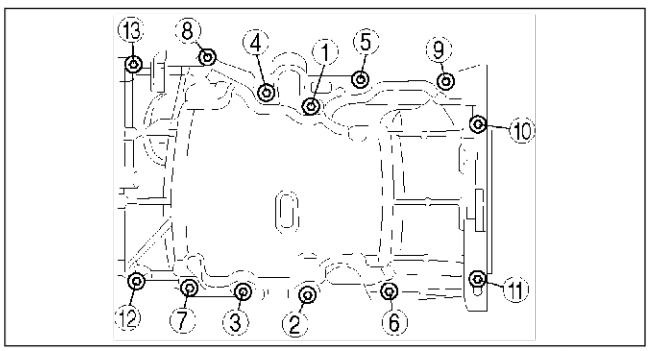

AME3320W001

MZR-CD (RF Turbo)

1. Disconnect the negative battery cable.
2. Remove the splash shield.
3. Drain the engine oil. (See D–16 ENGINE OIL REPLACEMENT.)
4. Drain the engine coolant. (See E–10 ENGINE COOLANT REPLACEMENT.)
5. Remove the drive belt. (See B4–12 DRIVE BELT REPLACEMENT.)
6. Remove the A/C idle pulley. (See U–7 A/C COMPRESSOR REMOVAL/INSTALLATION.)
7. Remove in the order indicated in the table.
8. Install in the reverse order of removal.
9. Fill with the specified amount and type of engine oil. (See D–16 ENGINE OIL INSPECTION.)
10. Fill with the specified amount of engine coolant. (See E–10 ENGINE COOLANT LEVEL INSPECTION.)
11. Start the engine and inspect for engine oil leakage.

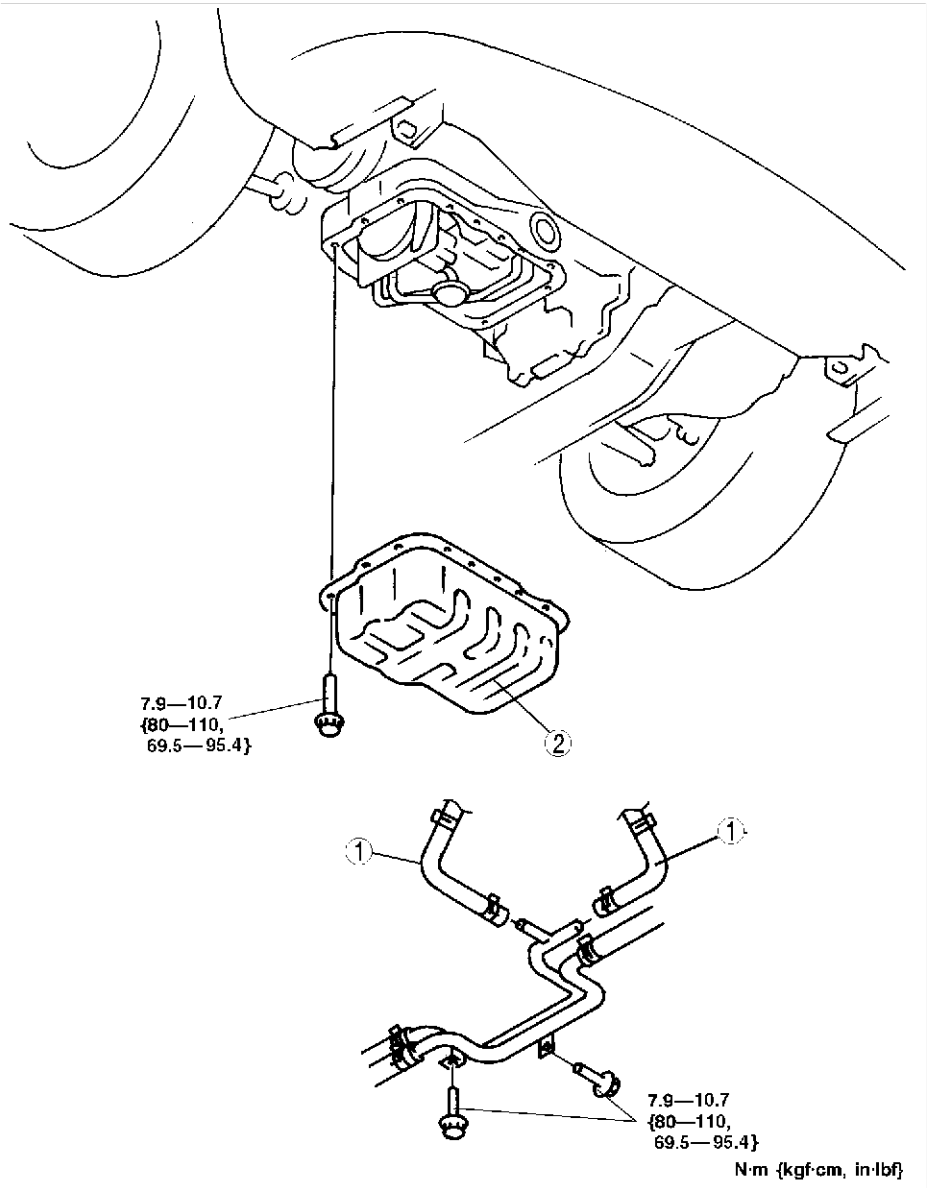

AME3320W007

1	Water hose

2	Oil pan (See D–23 Oil Pan Removal Note (MZR-CD (RF Turbo))) (See D–23 Oil Pan Installation Note (MZR-CD (RF Turbo)))

Oil Pan Removal Note (MZR-CD (RF Turbo))

Caution
- **Pry tools can easily scratch the oil pan mounting surfaces. Prying off the oil pan can easily bend the oil pan flange.**
  Refer to the following instructions before removing the oil pan.

1. Remove the oil pan mounting bolts.
2. Remove the sealant from the bolt threads.
3. Screw an oil pan bolt into the weldnut to make a small gap between the cylinder block and the oil pan.

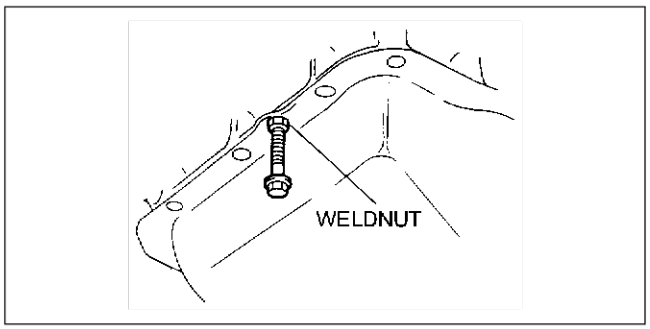

AME2524E024

4. Remove the oil pan using the separator tool.

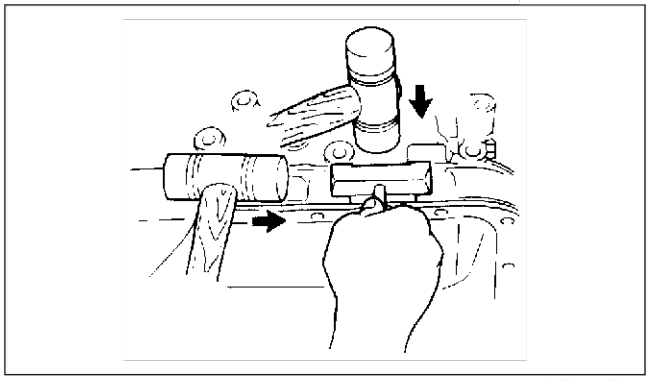
AME2524E025

Oil Pan Installation Note (MZR-CD (RF Turbo))

Caution
- **If the bolts are reused, remove the old sealant from the bolt threads. Tightening a bolt that has old sealant on it can cause bolt hole damage.**

1. Apply silicone sealant to the oil pan along the inside of the bolt holes and overlap the ends.

   Thickness
   2.5—3.5 mm {0.099—0.137 in}

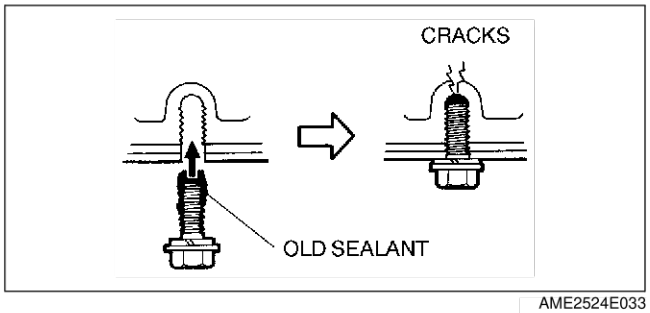

AME2524E033

2. Install the oil pan.
3. Hand tighten the flangeless bolts and tighten the flanged bolts.

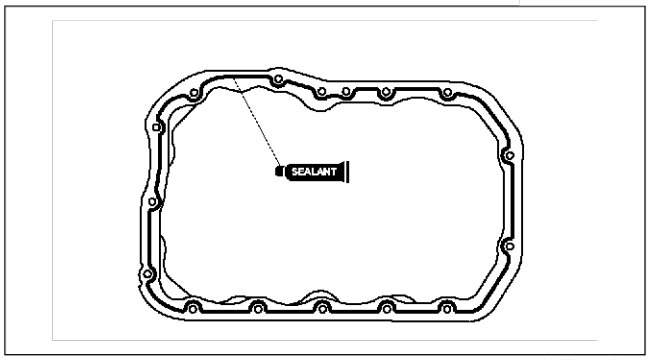

AME2524E063

End Of Sie

OIL PUMP

OIL PUMP REMOVAL/INSTALLATION

AME332214100W01

Caution

- **Position the hose clamp in the original location on the hose, and squeeze the clamp lightly with large pliers to ensure a good fit.**
- **After radiator cowling installation, rotate the cooling fan by hand and verify that the fan blade does not touch the radiator cowling. If the fan touches the cowling, adjust the radiator cowling mounting position.**

L3

1. Disconnect the negative battery cable.
2. Drain the engine oil. (See D–16 ENGINE OIL REPLACEMENT.)
3. Remove the oil pan. (See D–20 OIL PAN REMOVAL/INSTALLATION.)
4. Remove in the order indicated in the table.
5. Install in the reverse order of removal.
6. Fill with the specified amount and type of engine oil.
7. Inspect the engine oil level. (See D–16 ENGINE OIL INSPECTION.)
8. Start the engine and inspect for engine oil leakage.
9. Inspect the oil pressure. (See D–15 OIL PRESSURE INSPECTION.)

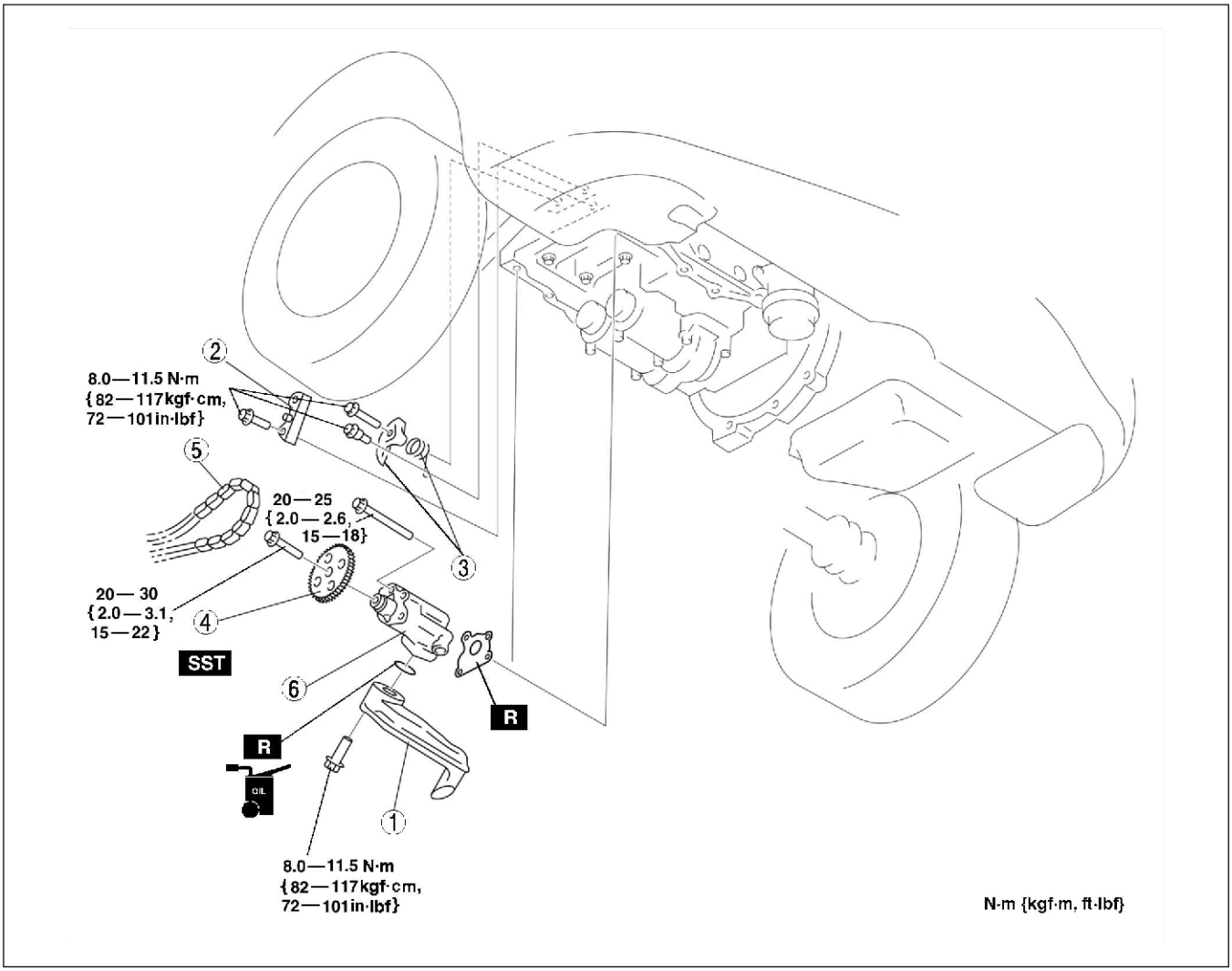

AME3322W005

1	Oil Strainer
2	Oil pump chain guide
3	Oil pump chain tensioner, Oil pump chain tensioner spring

4	Oil pump sprocket (See D–25 Oil Pump Sprocket Removal/Installation Note (L3))
5	Oil pump chain
6	Oil pump

Oil Pump Sprocket Removal/Installation Note (L3)

1. Use **SST** to stop the oil pump sprocket from turning.
2. Remove the bolt A.

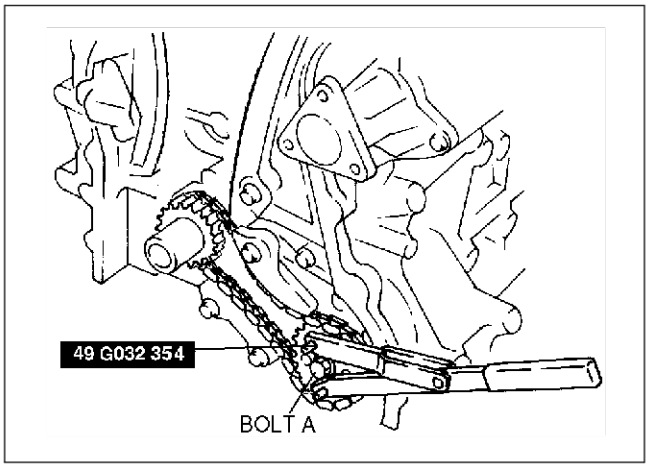

AMJ3622W006

AJ

1. Disconnect the negative battery cable.
2. Remove the timing chain. (See B2–7 TIMING CHAIN REMOVAL/INSTALLATION.)
3. Remove in the order indicated in the table.
4. Install in the reverse order of removal.
5. Fill with the specified amount and type of engine oil.
6. Start the engine and inspect for engine oil leakage.
7. Inspect the engine oil level. (See D–16 ENGINE OIL INSPECTION.)
8. Inspect the oil pressure. (See D–15 OIL PRESSURE INSPECTION.)

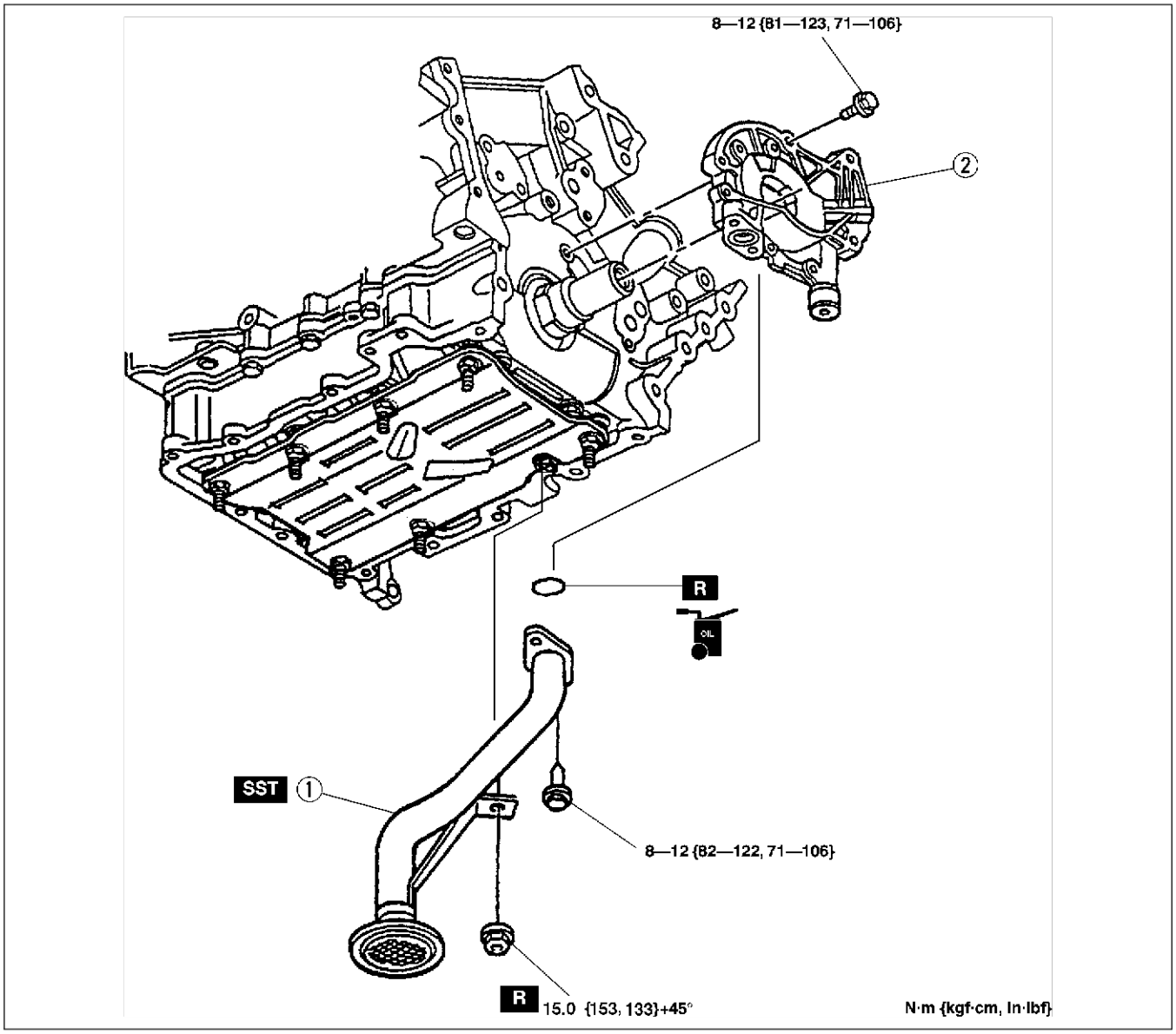

AMU0111W014

1	Oil strainer (See D–27 Oil Strainer Installation Note (AJ))

2	Oil pump (See D–27 Oil Pump Removal Note (AJ)) (See D–27 Oil Pump Installation Note (AJ))

Oil Pump Removal Note (AJ)

1. Loosen the oil pump bolts in the order shown.

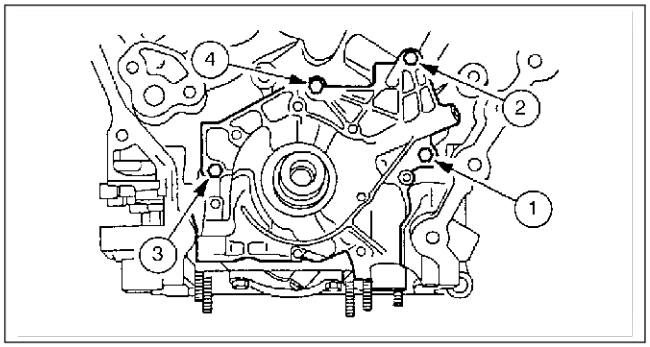

AMU0111W015

Oil Pump Installation Note (AJ)

1. Tighten the oil pump bolts in the order shown.

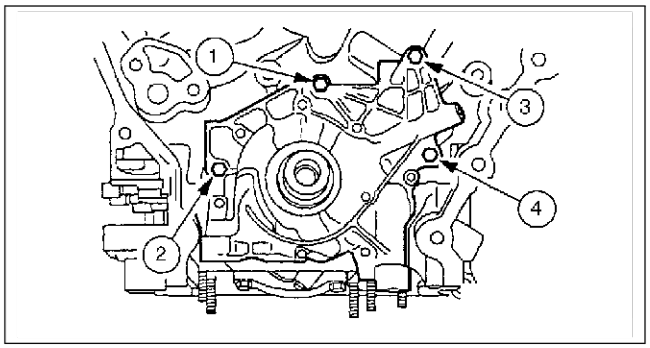

AMU0111W016

Oil Strainer Installation Note (AJ)

1. Tighten the oil strainer bolts.

   Tightening torque
   8—12 N·m {82—122 kgf·cm, 71—106 in·lbf}

2. Tighten the new oil strainer stay nut to **15.0 N·m {153 kgf·cm, 133 in·lbf}**, then tighten it further **45°** using the **SST**.

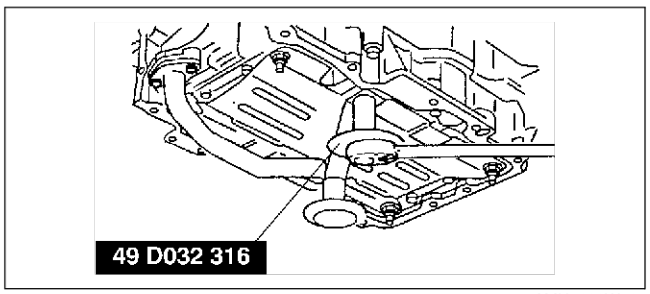

AMU0111W017

End Of Sie

COOLING SYSTEM

FEATURES

OUTLINE E-2
OUTLINE OF CONSTRUCTION E-2
FEATURES E-2
SPECIFICATIONS E-2
COOLING SYSTEM E-3
STRUCTURAL VIEW E-3
COOLING FLOW DIAGRAM E-5
RADIATOR E-7
COOLING FAN E-7
FAN CONTROL MODULE E-7
THERMOSTAT E-8
WATER PUMP E-9

SERVICE

OUTLINE E-9
SUPPLEMENTAL SERVICE INFORMATION E-9
ENGINE COOLANT E-10
ENGINE COOLANT LEVEL INSPECTION E-10
ENGINE COOLANT PROTECTION INSPECTION E-10
ENGINE COOLANT REPLACEMENT E-10
RADIATOR CAP E-12
RADIATOR CAP INSPECTION E-12
RADIATOR E-13
RADIATOR REMOVAL/INSTALLATION E-13
THERMOSTAT E-16
THERMOSTAT REMOVAL/INSTALLATION E-16
THERMOSTAT INSPECTION E-17
WATER PUMP E-18
WATER PUMP REMOVAL/INSTALLATION E-18
FAN MOTOR E-20
COOLING FAN MOTOR REMOVAL/INSTALLATION E-20
FAN CONTROL MODULE E-22
FAN CONTROL MODULE INSPECTION E-22

OUTLINE

OUTLINE OF CONSTRUCTION

AME360202000W01

- With the addition of the L3 engine model, the cooling system has been newly adopted. (European specs.)
- The construction and operation of the cooling system for the MPV (LW) AJ engine model is the same as the current MPV (LW) GY engine model except the following features. (Australian, General L.H.D. R.H.D. specs.) (See MPV Training Manual 1666-1*-99F.)
- The construction and the operation of the cooling system for the new MPV (LW) MZR-CD (RF Turbo) is the same as the current 323 (BJ) RF Turbo engine model. (European specs.) (See 323 RF Turbo Workshop Manual Supplement 1633-10-98G.)

End Of Sie

FEATURES

AME360202000W02

Reduced weight and size

- Cross-flow type radiator with radiator tanks made of plastic and the core made of aluminum. (L3 engine model)
- Stainless steel thermostat body is built in the plastic thermostat case. (L3 engine model)
- Built-in type water pump (L3 engine model)

Reduce engine noise and vibration

- Electric cooling fan has been adopted. (L3 and MZR-CD (RF Turbo) engine model)

Improved reliability

- Thermostat of highly durable wax type. (L3 engine model)
- Water pump that is built into cylinder block. (L3 engine model)

Improved cooling system

- Fan control module has been adopted. (L3, AJ and MZR-CD (RF Turbo) engine model)

End Of Sie

SPECIFICATIONS

AME360202000W03

<table>
<tr><th colspan="3" rowspan="4">Item</th><th colspan="4">Engine type</th></tr>
<tr><th colspan="3">Gasoline engine</th><th colspan="2">Diesel engine</th></tr>
<tr><th colspan="2">New MPV (LW)</th><th>Previous MPV (LW)</th><th>New MPV (LW)</th><th>Current 323 (BJ)</th></tr>
<tr><th>L3</th><th>AJ</th><th>GY</th><th>MZR-CD (RF Turbo)</th><th>RF Turbo</th></tr>
<tr><td colspan="3">Cooling system</td><td colspan="4">Water-cooled</td></tr>
<tr><td rowspan="3">Coolant capacity (Approximate quantity) (L {US qt, Imp qt}</td><td>Australian specs.</td><td rowspan="2">–</td><td>With rear heater: 12.0 {12.7, 10.6} Without rear heater: 10.2 {10.8, 9.0}</td><td rowspan="3">With rear heater: 12.0 {12.7, 10.6} Without rear heater: 10.2 {10.8, 9.0}</td><td rowspan="2">–</td><td></td></tr>
<tr><td>General (L.H.D. R.H.D.), Israeli specs.</td><td>With rear heater: 12.4 {13.1, 10.9} Without rear heater: 10.6 {11.2, 9.3}</td><td></td></tr>
<tr><td>European (L.H.D. U.K.) specs.</td><td>With rear heater: 10.5 {11.1, 9.2} Without rear heater: 8.8 {9.3, 7.7}</td><td>–</td><td>With rear heater: 10.7 {11.3, 9.4} Without rear heater: 8.6 {9.1, 7.6}</td><td>9.0 {9.5, 7.9}</td></tr>
<tr><td colspan="2">Water pump</td><td>Type</td><td colspan="2">Centrifugal, V-ribbed belt-driven</td><td colspan="2">Centrifugal, Timing-belt driven</td></tr>
<tr><td rowspan="4">Thermostat</td><td colspan="2">Type</td><td colspan="4">Wax bottom bypass</td></tr>
<tr><td>Opening temperature</td><td>(°C {°F})</td><td>80—84 {176—183}</td><td>84—88 {183—190}</td><td colspan="2">80—84 {176—183}</td></tr>
<tr><td>Full-open temperature</td><td>(°C {°F})</td><td>97 {206}</td><td>99 {210}</td><td colspan="2">95 {203}</td></tr>
<tr><td>Full-open lift</td><td>(mm {in})</td><td>More than 8.0 {0.31}</td><td>More than 7.3 {0.29}</td><td colspan="2">More than 8.5 {0.33}</td></tr>
</table>

Item			Engine type				
			Gasoline engine			Diesel engine	
			New MPV (LW)		Previous MPV (LW)	New MPV (LW)	Current 323 (BJ)
			L3	AJ	GY	MZR-CD (RF Turbo)	RF Turbo
Radiator	Type		Corrugated fin				
	Cap valve opening pressure (kPa {kgf/cm^2, psi})		94—122 {0.95—1.25, 13.6—17.7}			94—122 {0.95—1.25, 13.6—17.7}	
Cooling fan	Type		Electric				
	Blade	Outer diameter (mm {in})	320 {12.6}	340 {13.4}	320 {12.6}	320 {12.6}	300 {11.9}
		Quantity	Main fan: 5 Additional fan: 7	Main fan: 4 Additional fan: 5	Main fan: 5, Condenser fan: 7	Main fan: 5 Additional fan: 7	4

Bold frames:New specifications

End Of Sie

COOLING SYSTEM

STRUCTURAL VIEW

AME363002000W06

L3

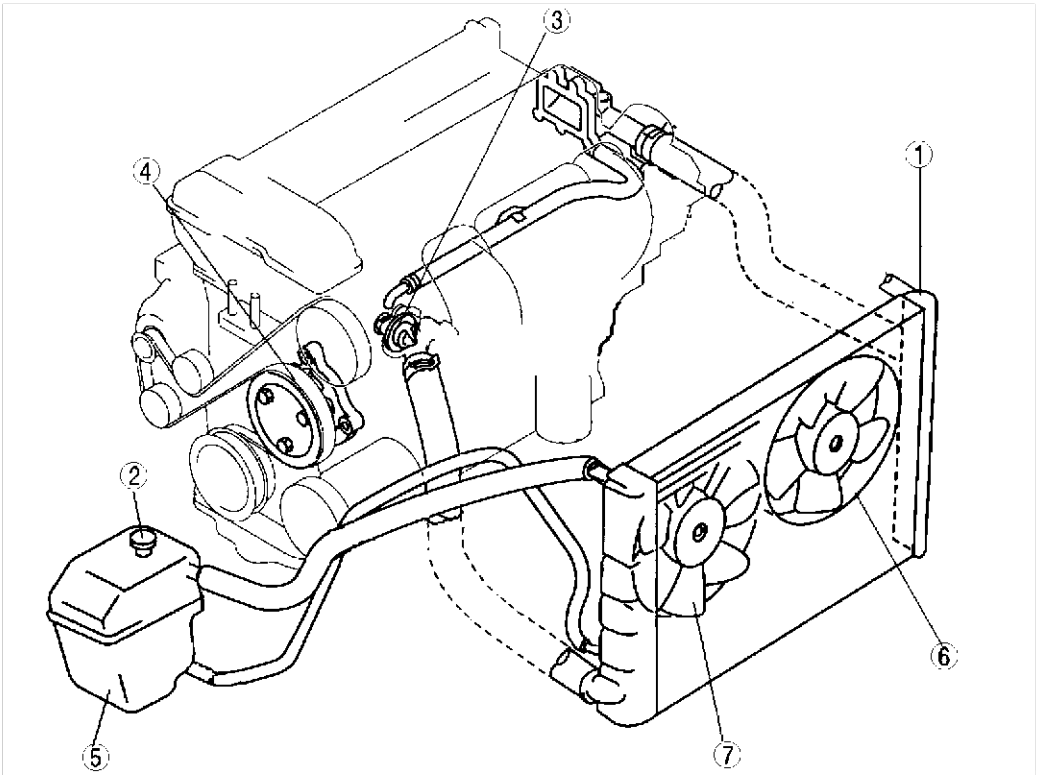

AME3602W101

1	Radiator
2	Radiator cap
3	Thermostat
4	Water pump

5	Reservoir tank
6	Main fan
7	Additional fan

MZR-CD (RF Turbo)

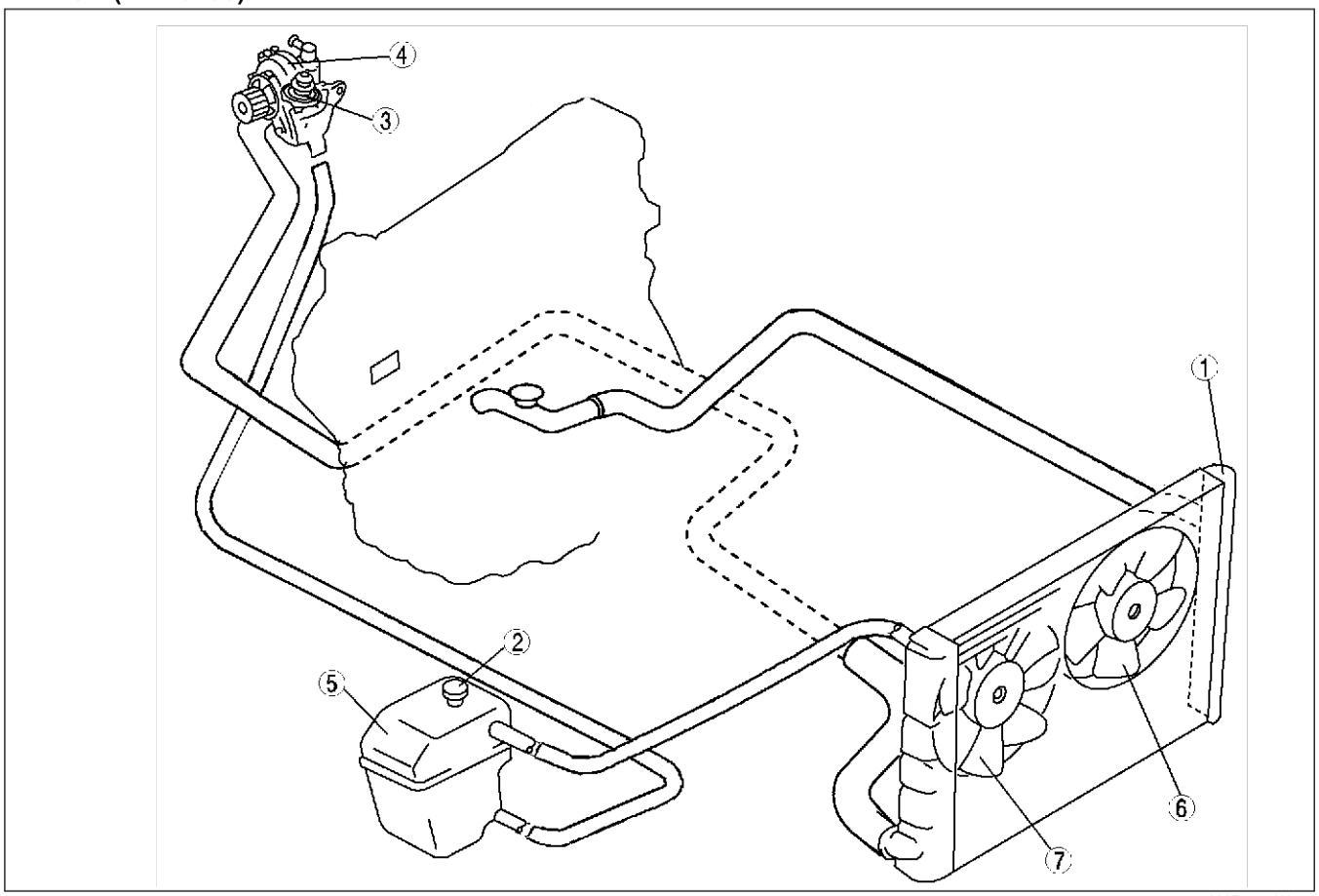

AME3602W201

1	Radiator
2	Radiator cap
3	Thermostat
4	Water pump

5	Reservoir tank
6	Main fan
7	Additional fan

End Of Sie

COOLING FLOW DIAGRAM

AME363002000W07

L3

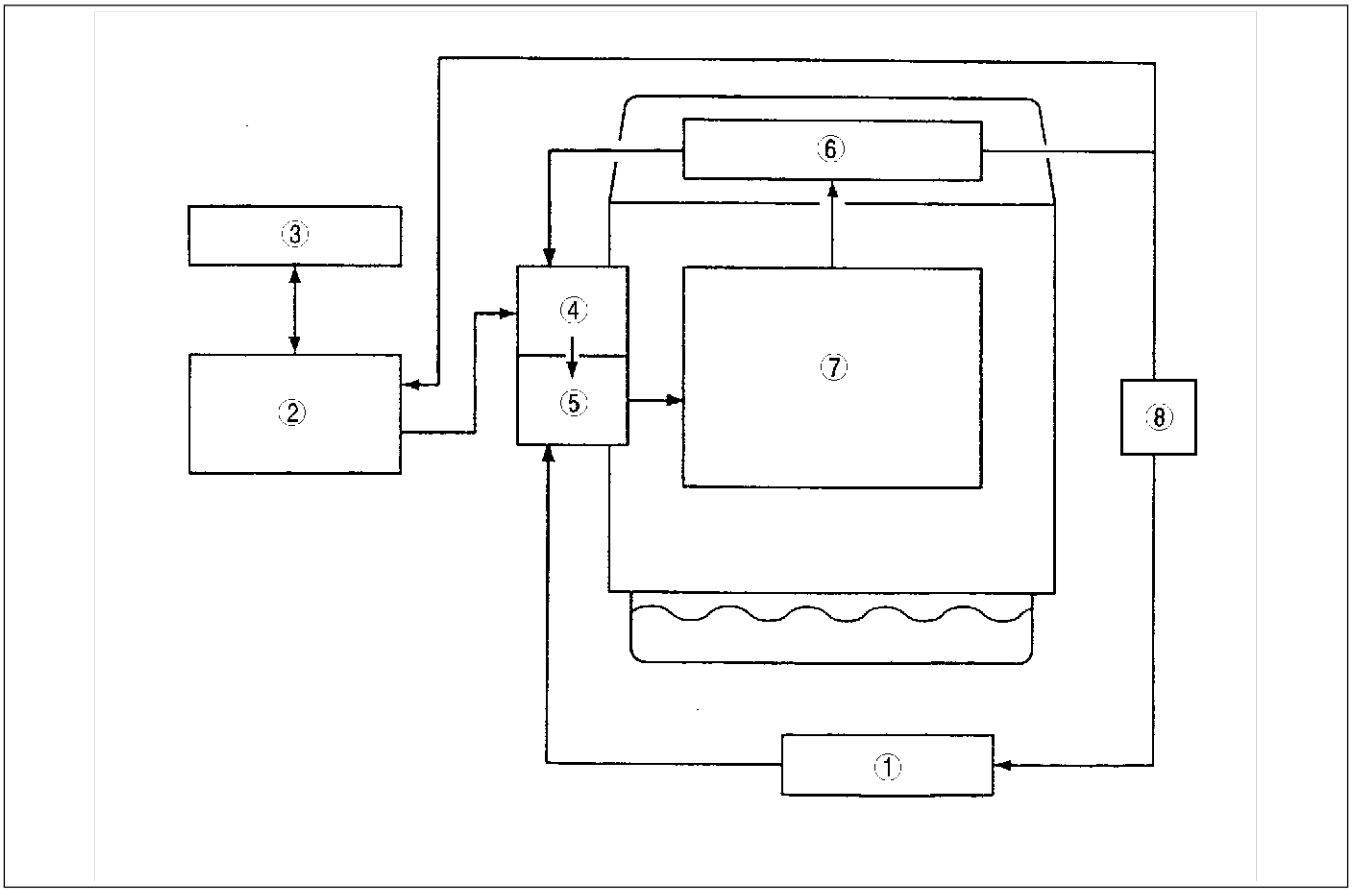

AME3602N002

1	Heater
2	Radiator
3	Coolant reservoir tank
4	Thermostat

5	Water pump
6	Cylinder head
7	Cylinder block
8	Oil cooler

MZR-CD (RF Turbo)

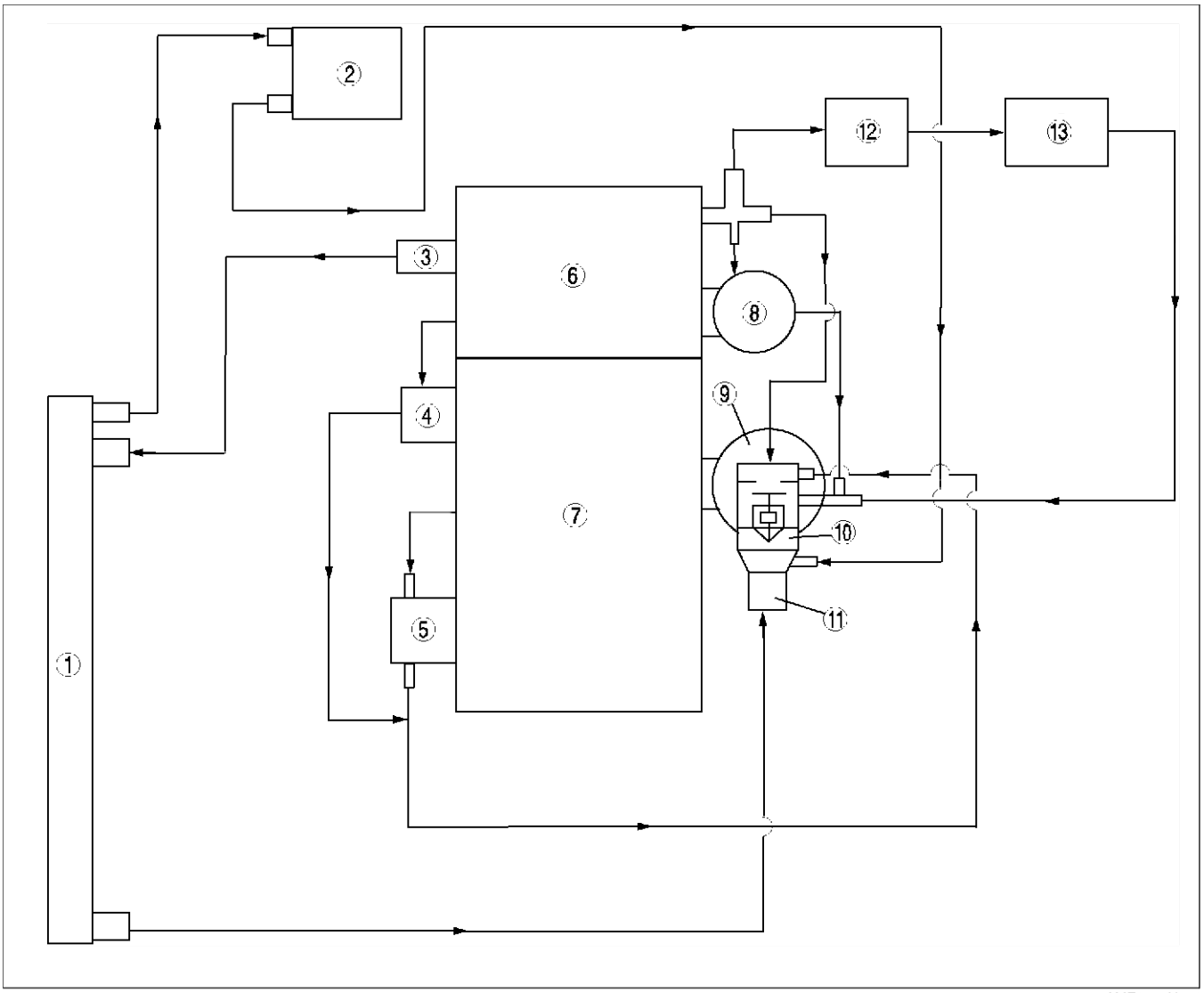

AME3602N002

1	Radiator
2	Reservoir tank
3	Water outlet
4	EGR
5	Oil cooler
6	Cylinder head
7	Cylinder block

8	Turbocharger
9	Water pump
10	Thermostat case
11	Thermostat cover
12	Water heater system
13	Heater core

End Of Sie

RADIATOR

AME363002000W01

L3, MZR-CD (RF TURBO)

Structure

- A cross-flow radiator with corrugated fins is used to improve cooling performance.
- The radiator tanks are made of plastic and the core is made of aluminum.
- Four rubber-insulated mounting brackets are utilized to decrease vibration.
- The radiator has an ATF cooler in the radiator tank. (ATX)
- A low-pressure-type radiator cap has been adopted.

End Of Sta

COOLING FAN

AME363002000W02

L3, MZR-CD (RF TURBO)

Structure

- The cooling fan is electrically operated.

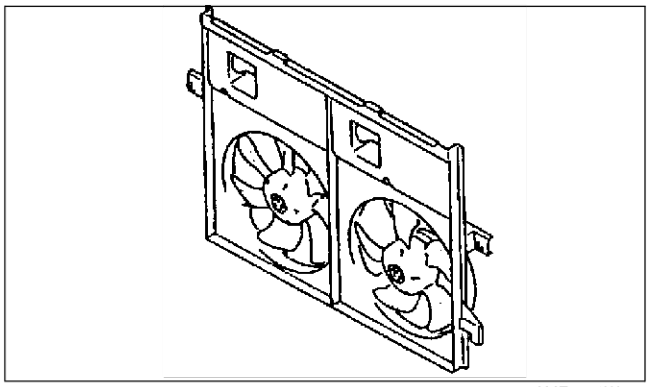

AME3621W006

End Of Sta

FAN CONTROL MODULE

AME363002000W03

Structure

- The fan control module is installed on the radiator cowling.

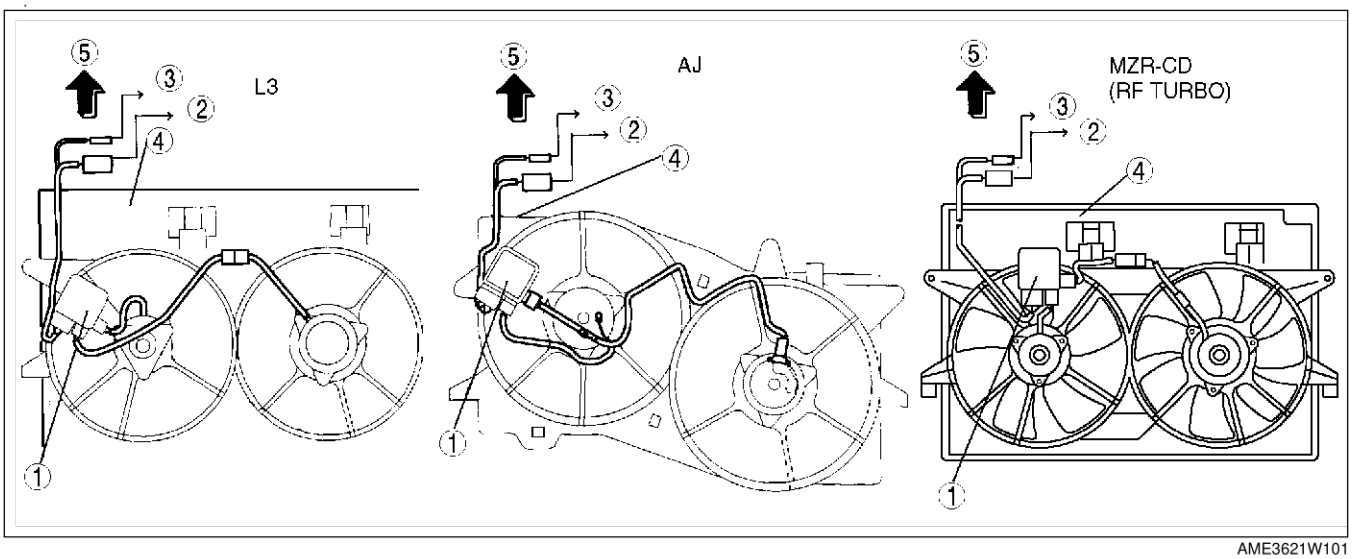

AME3621W101

1	Fan control module
2	Power supply (1 terminal)
3	PCM/ Ground (2 terminals)

4	Radiator cowling
5	Front

Operation

- The fan control module drives both fan motors based on the cooing fan control signal sent by the PCM.
- The fan control module has a power supply function described below.

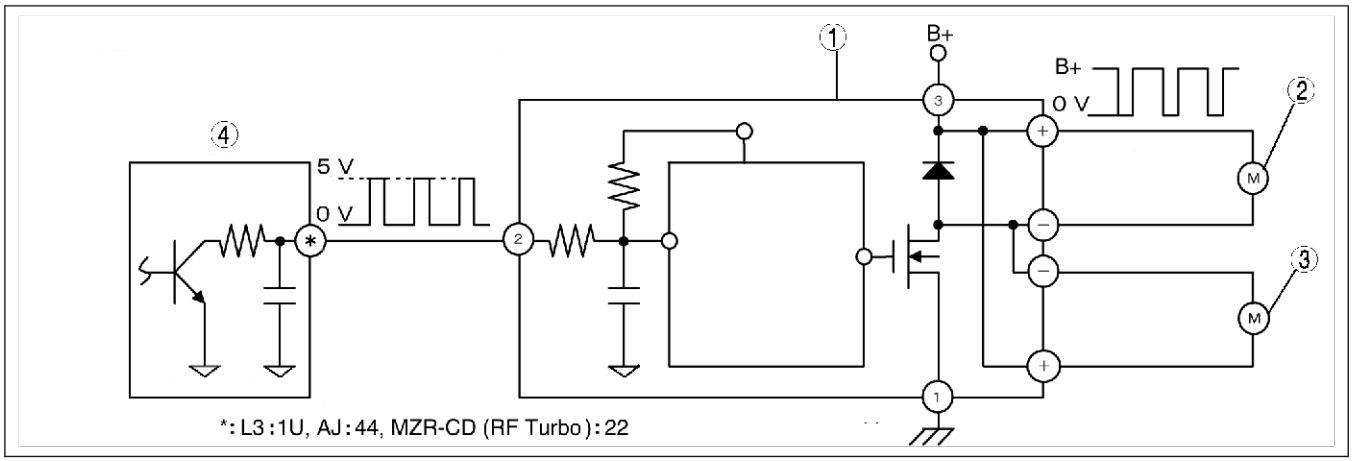

AME3621W003

1	Fan control module
2	Main fan motor

3	Additional fan motor
4	PCM

1. Over-current fail-safe
   — If current to the fan motor exceeds the specified value, the fan control module is set to the output duty value.
   — If current to the fan motor returns to the specified value, the fan control module returns to normal control.
2. Over heat fail-safe
   — If the internal area of the fan control module exceeds the specified temperature, the fan control module is set to the output duty value.
3. Input signal open circuit fail-safe
   — If there is an open circuit in the harness between the PCM and the fan control module, the fan control module is set to the output value.

End Of Sta

THERMOSTAT

AME363002000W04

L3

Structure

- A wax-type thermostat with a jiggle pin has been adopted.
- The plastic thermostat case has a built-in stainless steel thermostat body with excellent corrosion resistance.
- When the engine coolant temperature is below 75.0°C {167°F}, the thermostat stops the radiator coolant circulation from the radiator for improved engine warming performance. When the engine coolant temperature is between 80.0 °C {176°F} and 84.0 °C {183.2°F}, the thermostat begins opening the valve and engine coolant flows from the radiator to stabilize engine coolant temperature.

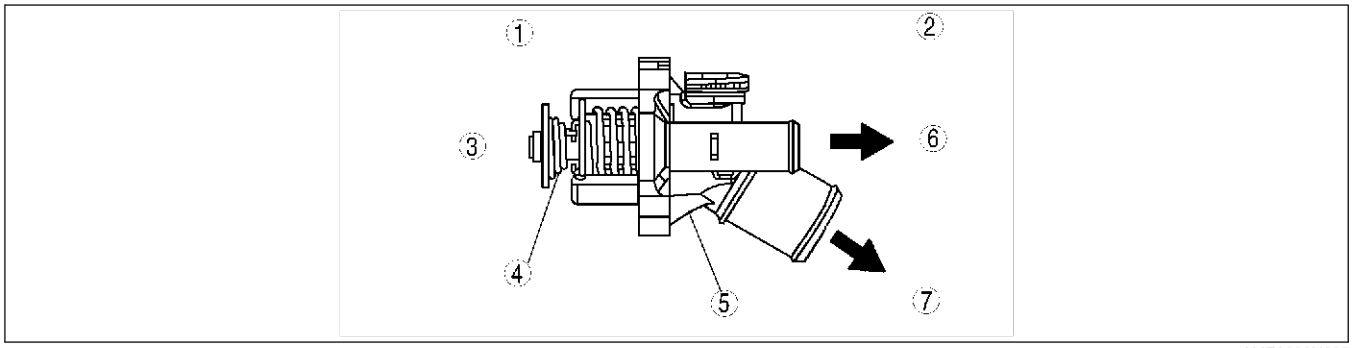

AME3602N005

1	Engine side
2	Radiator side
3	Water pump
4	Thermostat body

5	Thermostat case
6	Oil cooler
7	Lower radiator hose

WATER PUMP

AME363002000W05

L3

Structure

- The water pump body is made of aluminum alloy for weight reduction.
- The impeller is built into the cylinder block and the water pump is not serviceable and must be replaced as a unit if faulty.
- The water pump is driven by the front drive belt. (sirpentain type)

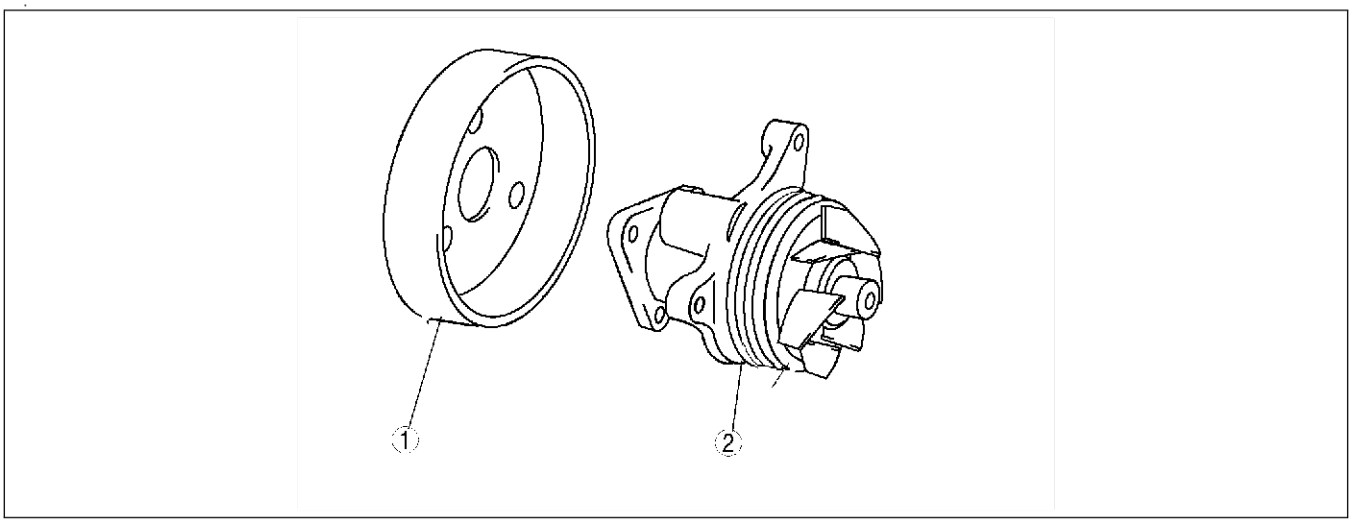

AME3602N006

1	Water pump pulley
2	Water pump body

End Of Sta

OUTLINE

SUPPLEMENTAL SERVICE INFORMATION

AME360202000W04

- The following changes and/or additions have been made since publication of the MPV Workshop Manual (1666 -1*-99F).
- For the new MPV (LW) AJ engine model, the procedures are the same with the previous MPV (LW) GY engine model except for the following.

Engine coolant

- Inspection procedure has been added. (MZR-CD (RF Turbo) engine model)
- Replacement procedure has been added. (MZR-CD (RF Turbo) engine model)

Radiator cap

- Inspection procedure has been added. (L3 and MZR-CD (RF Turbo) engine models)

Radiator

- Removal/Installation procedure has been added.

Thermostat

- Removal/Installation procedure has been added. (L3 and MZR-CD (RF Turbo) engine models)
- Inspection procedure has been added. (L3 and MZR-CD (RF Turbo) engine models)

Water pump

- Removal/Installation procedure has been added. (L3 and MZR-CD (RF Turbo) engine models)

Cooling fan motor

- Removal/Installation procedure has been added.

Fan control module

- Inspection procedure has been added.

End Of Sta

ENGINE COOLANT

ENGINE COOLANT LEVEL INSPECTION

AME361215001W01

1. Verify that the coolant level in the coolant reservoir is between the F and L marks.
   - If the engine coolant level is below L, remove the radiator cap and add coolant.

End Of Sie

ENGINE COOLANT PROTECTION INSPECTION

AME361215001W02

1. Measure the coolant temperature and specific gravity with a thermometer and a hydrometer.

Caution
- **The engine has aluminium parts that can be damaged by alcohol or methanol antifreeze. Do not use alcohol or methanol in the cooling system. Use only ethylene-glycol-based coolant.**
- **Use only soft (demineralized) water in the coolant mixture. Water that contains minerals will reduce the coolant effectiveness.**

2. Determine the coolant protection by referring to the graph shown.
   - If the coolant protection is not proper, add water or coolant.

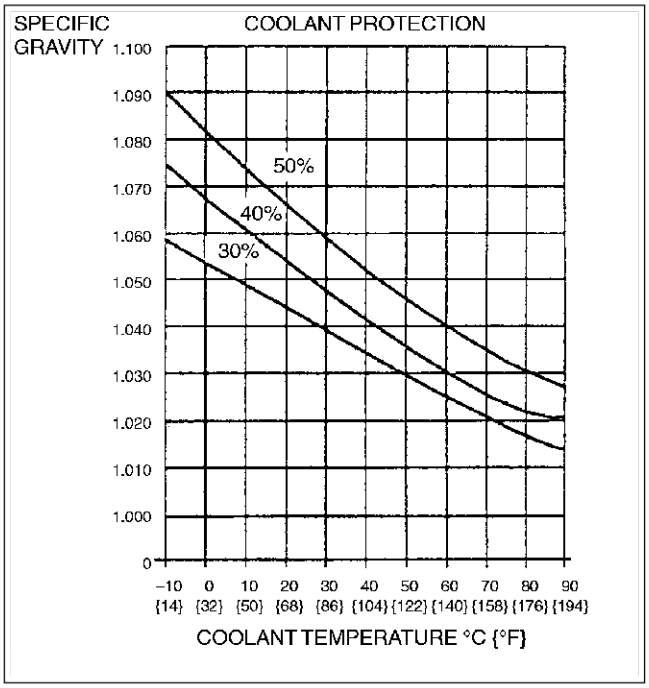

X3U112WA2

End Of Sie

ENGINE COOLANT REPLACEMENT

AME361215001W03

Warning
- **Drain the engine coolant while the engine is cold, otherwise it may burn you and cause serious injury.**

1. Remove the radiator cap and the radiator drain plug.
2. Drain the coolant into a container.
3. Flush the cooling system with water until all traces of color are gone.
4. Let the system drain completely.
5. Tighten the radiator drain plug.

Tightening torque
0.7—1.2 N·m {8—12 kgf/cm^2, 7—10 in·lbf}

Caution
- **The engine has aluminium parts that can be damaged by alcohol or methanol antifreeze. Do not use alcohol or methanol in the cooling system. Use only ethylene-glycol-based coolant.**
- **Used only soft (demineralized) water in the coolant mixture. Water that contains minerals will reduce that coolant effectiveness.**
- **Engine coolant will damage paint. Rinse it off quickly.**

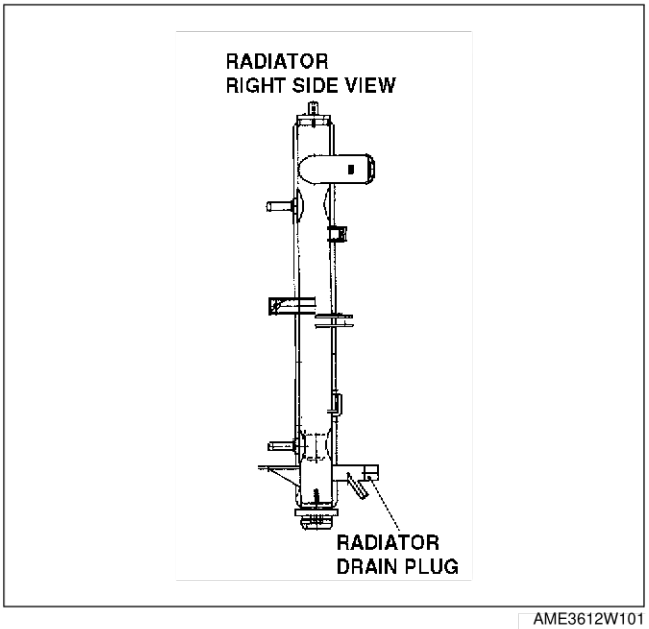

AME3612W101

6. Referring to the following chart, select proper volume percentage of the water and coolant.

Antifreeze solution mixture percentage

Coolant protection	Volume percentage		Gravity at 20 °C {68 °F}
	Water	Coolant	
Above –16 °C {3 °F}	65	35	1.054
Above –26 °C {–15°F}	55	45	1.066
Above –40 °C {–40 °F}	45	55	1.078

7. Slowly pour the coolant into the radiator up to the coolant filler port.
8. Fill the coolant into the reservoir up to the FULL mark on the coolant reservoir.
9. Fully install the radiator cap.

Caution
- **If the coolant temperature becomes too high, stop the engine to prevent it from overheating.**

10. Start the engine and let it idle until the cooling fan operates.
11. After engine warms up, perform the following steps.
    (1) Run the engine at **2,500 rpm** for **5 min**.
    (2) Run the engine at **3,000 rpm** for **5 s**, then return to idling.
    (3) Repeat Step (2) several times.
    (4) Run the engine at idle for **1 min**.
12. Stop the engine and wait until it is cool.
13. Remove the radiator cap.
14. Check the coolant level.
    - If It is low, repeat Steps 6—9.
15. Install the radiator cap.
16. Inspect for coolant leakage.
    - If not as specified, repair or replace the radiator cap.

End Of Ste

RADIATOR CAP

RADIATOR CAP INSPECTION

AME361415201W01

MZR-CD (RF Turbo)

Warning

- **Never remove the radiator cap while the engine is running, or when the engine and radiator are hot. Scalding coolant and steam may shoot out and cause serious injury. It may also damage the engine and cooling system.**
- **Turn off the engine and wait until it is cool. Even then, be very careful when removing the cap. Wrap a thick cloth around it and slowly turn it counterclockwise to the first stop. Step back while the pressure is released.**
- **After confirming all the pressure is released, press down on the cap using the cloth, turn it, and remove it.**

1. Attach the radiator cap to a radiator cap tester with the **SST**.
2. Apply pressure gradually.
3. Verify that the pressure becomes held within the specification.

Pressure
94—122 kPa
{0.95—1.25 kgf/cm^2, 13.6—17.7 psi}

- If the pressure is held for **10 s**, the radiator cap is normal.
- If not as specified, replace the radiator cap.

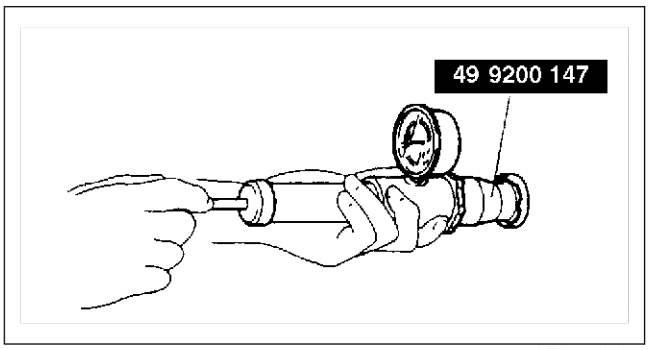

YTA3614W101

End Of Sec

RADIATOR

RADIATOR REMOVAL/INSTALLATION

AME361615200W01

1. Disconnect the negative battery cable.
2. Drain the engine coolant. (See E–10 ENGINE COOLANT REPLACEMENT.)
3. Remove the front bumper. (See Section S.)
4. Remove the hood lock release lever.
5. Remove in the order indicated in the table.
6. Install in the reverse order of removal.
7. Refill the engine coolant. (See section E–10 ENGINE COOLANT REPLACEMENT.)
8. Install in the reverse order of removal.

AJ

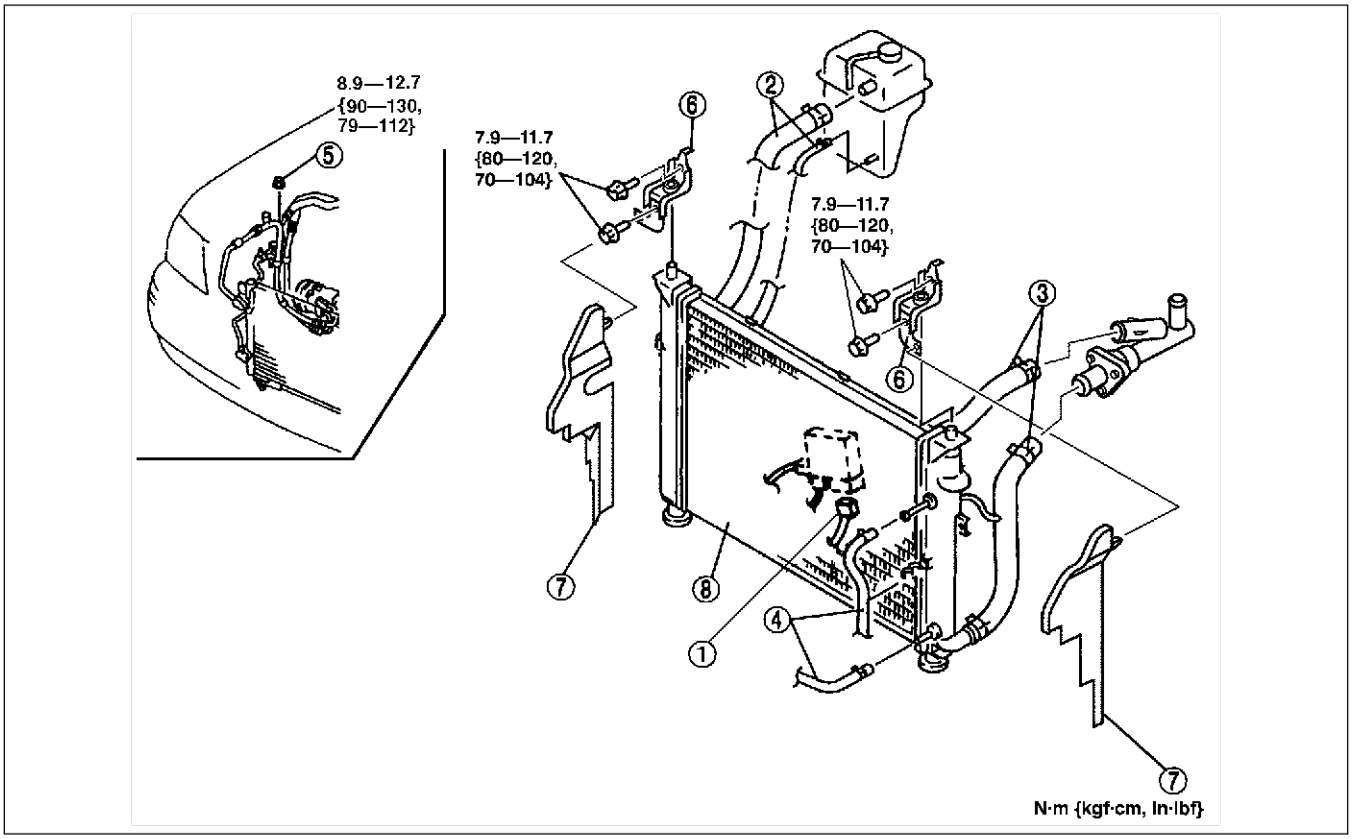

AME3616W008

1	Fan control module connector
2	Reservoir hose
3	Radiator hose
4	Oil hose (ATX)
5	A/C pipe stay nut

6	Radiator bracket
7	Air seal
8	Radiator and cooling fan (See E–13 Radiator and Cooling Fan Removal/ Installation Note (AJ))

Radiator and Cooling Fan Removal/Installation Note (AJ)

1. Before removing/installing the radiator, move the condenser toward front of the vehicle to make a space.

L3

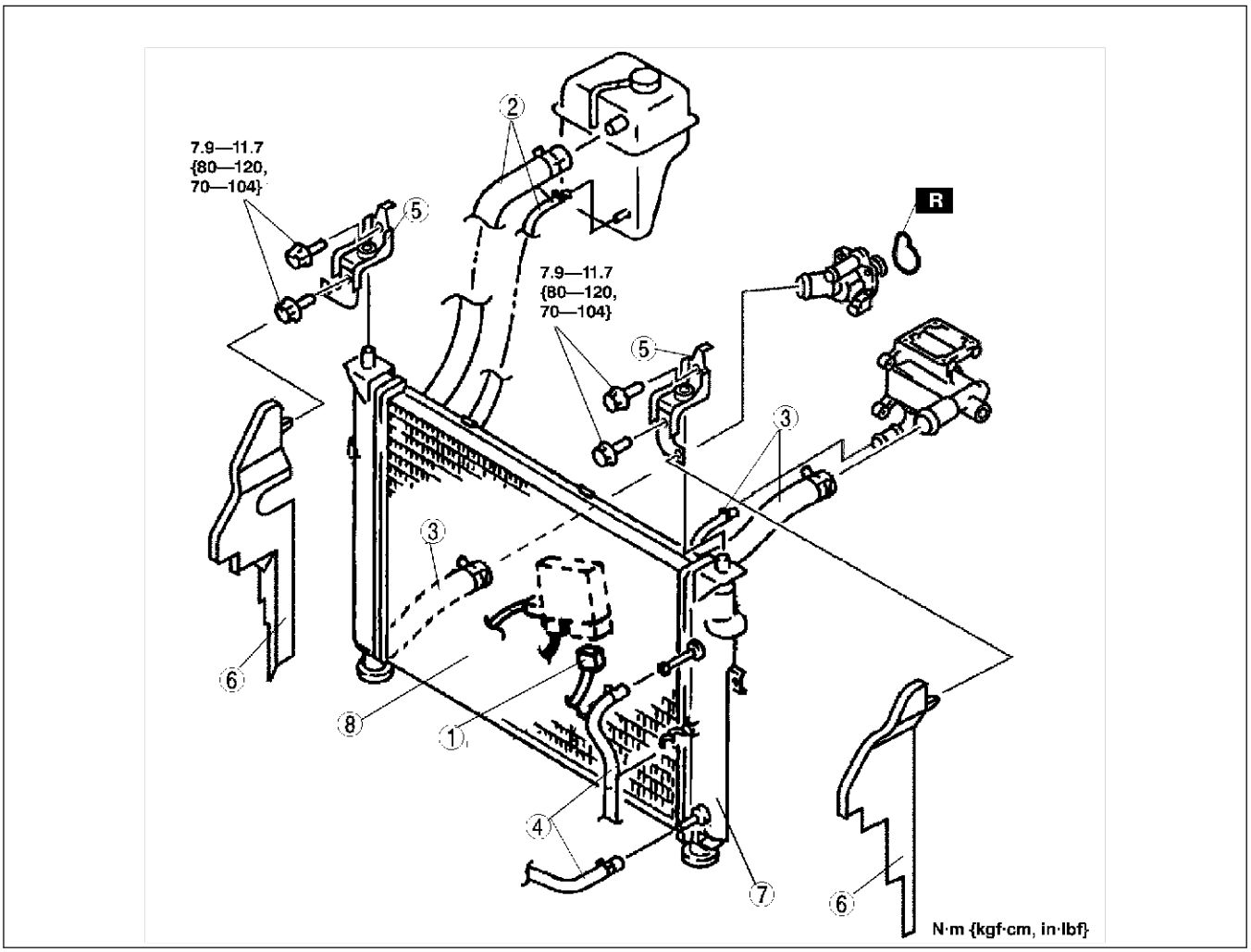

AME3616W007

1	Fan control module connector
2	Reservoir hose
3	Radiator hose
4	Oil hose (ATX)

5	Radiator bracket
6	Air seal
7	Radiator (See E–14 Radiator Removal/Installation Note (L3))

Radiator Removal/Installation Note (L3)

1. Pull the fan component backward to obtain clearance, and remove/install the radiator.

MZR-CD (RF Turbo)

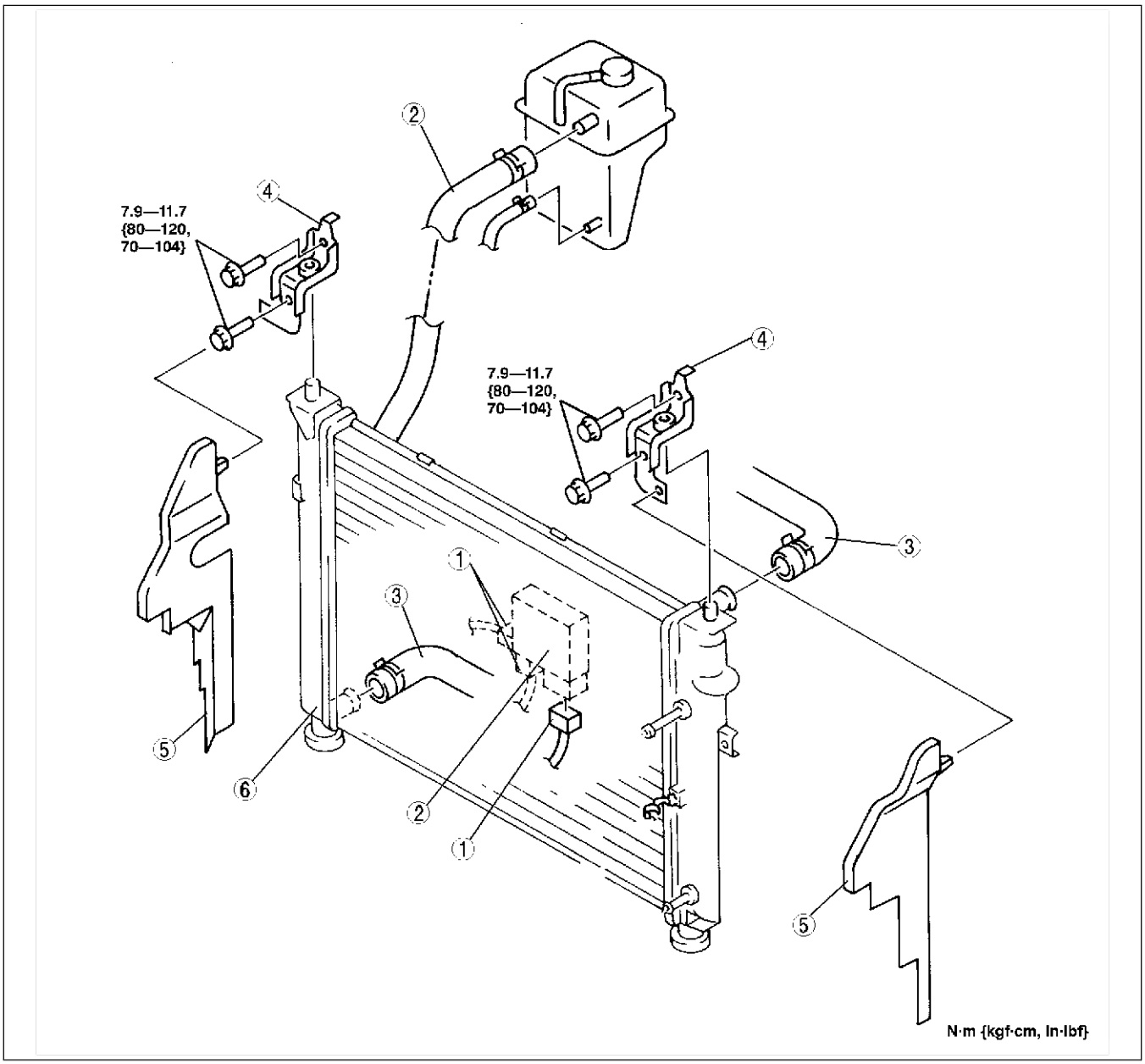

AME3616W006

1	Fan control module connectors
2	Fan control module (See E–20 COOLING FAN MOTOR REMOVAL/INSTALLATION)
3	Reservoir hose
4	Radiator hose

5	Radiator bracket
6	Air seal
7	Radiator (See E–15 Radiator Removal/Installation Note (MZR-CD (RF Turbo)))

Radiator Removal/Installation Note (MZR-CD (RF Turbo))

1. Pull the fan component backward to obtain the clearance, and remove/install the radiator.

End Of Sta

THERMOSTAT

THERMOSTAT REMOVAL/INSTALLATION

AME361815171W01

L3, MZR-CD (RF Turbo)

1. Disconnect the negative battery cable.
2. Drain the engine coolant. (See E–10 ENGINE COOLANT REPLACEMENT.)
3. Remove the P/S oil pump without disconnecting the hose and the pipe. (L3 engine model)
4. Remove in the order indicated in the table.
5. Install in the reverse order of removal.
6. Fill the radiator with the specified amount and type of engine coolant. (See E–10 ENGINE COOLANT REPLACEMENT.)

L3

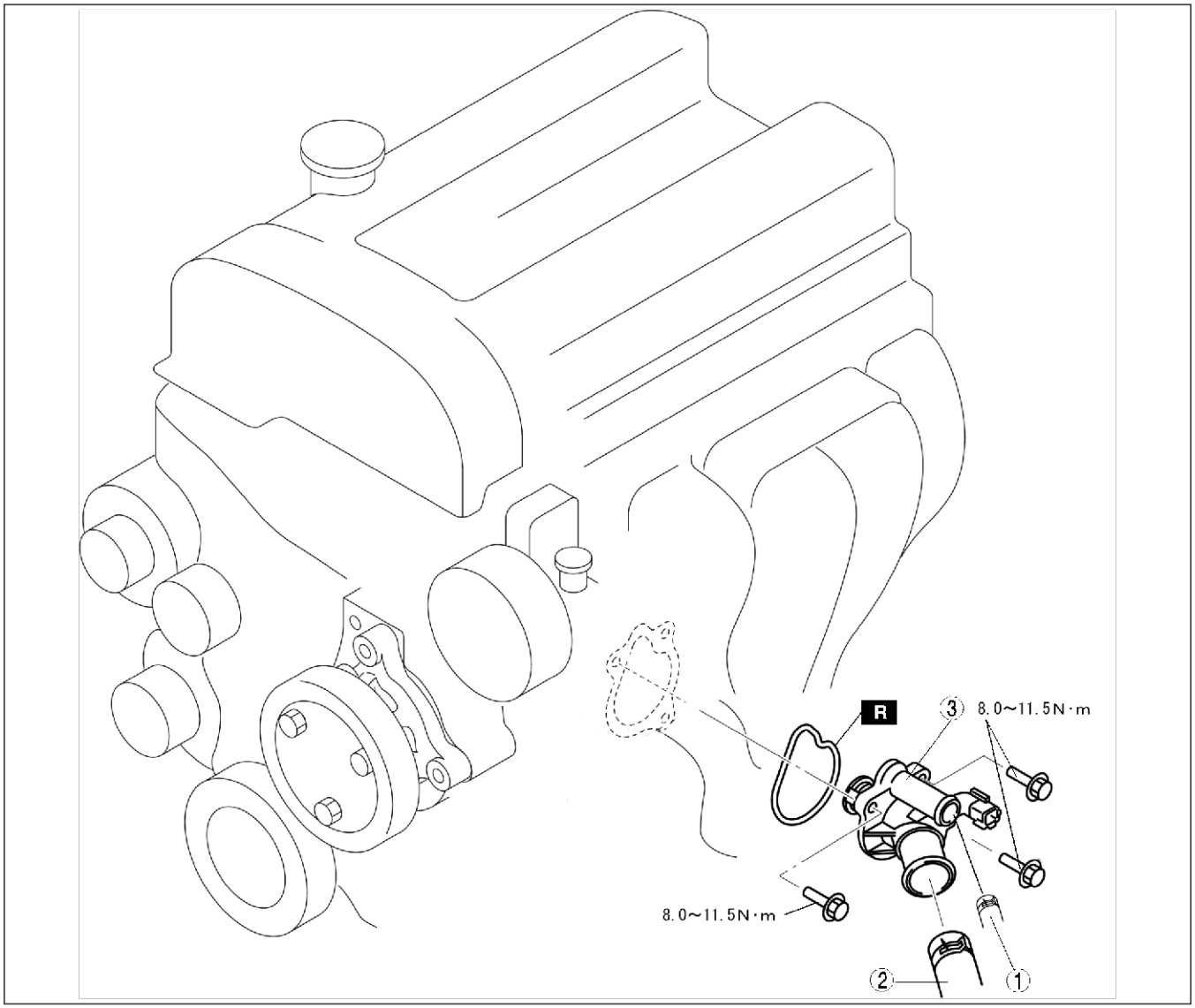

AME3618W002

1	Bypass hose
2	Lower radiator hose

3	Thermostat

MZR-CD (RF Turbo)

1	Lower radiator hose
2	Thermostat cover
3	Thermostat (See E–17 Thermostat Installation Note (MZR-CD (RF Turbo)))

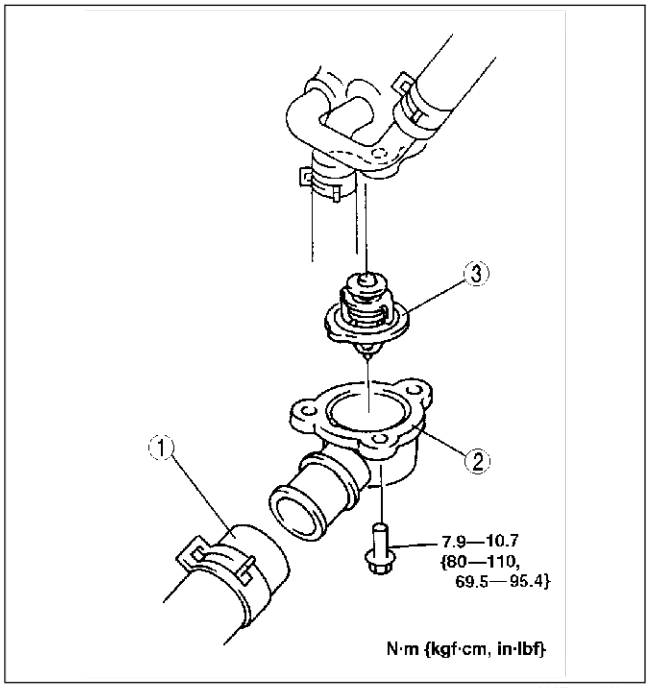

AME3620W003

Thermostat Installation Note (MZR-CD (RF Turbo))

1. Verify that the positions of the jiggle pin and the projection on the gasket are as shown.
2. Install the thermostat into the thermostat case, aligning the projection on the gasket to the thermostat cover.

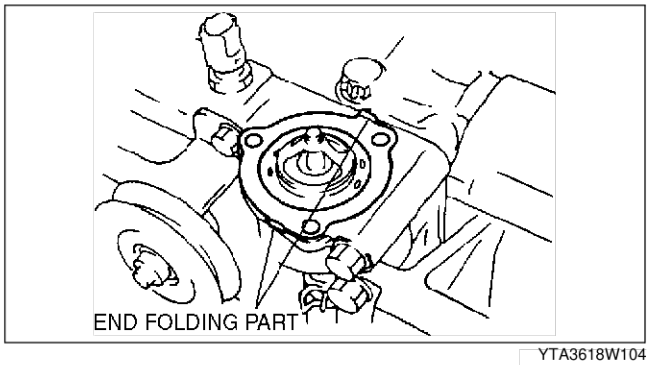

YTA3618W104

End Of Sie

THERMOSTAT INSPECTION

AME361815171W02

1. Inspect the thermostat for the following.
   - Closed valve in room temperature
   - Opening temperature and lift of the valve
     — If not as specified, replace the thermostat.

Condition	Specification
	MZR-CD (RF Turbo)
Initial-opening temperature (°C {°F})	80—84 {176—183}
Full-open temperature (°C {°F})	95 {203}
Full-open lift (mm {in})	More than 8.5 {0.33}

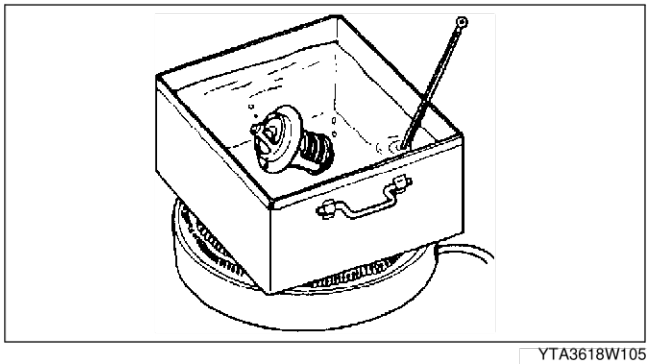

YTA3618W105

End Of Sie

WATER PUMP

WATER PUMP REMOVAL/INSTALLATION

AME362015010W01

L3, MZR-CD (RF Turbo)

1. Disconnect the negative battery cable.
2. Drain the engine coolant. (See E–10 ENGINE COOLANT REPLACEMENT.)
3. Loosen the water pump pulley bolt and remove the drive belt. (L3 engine model) (See B3–25 DRIVE BELT REPLACEMENT.)
4. Remove the timing belt. (MZR-CD (RF Turbo) engine model) (See B4–17 TIMING BELT REMOVAL/INSTALLATION.)
5. Remove in the order indicated in the table.
6. Install in the reverse order of removal.
7. Inspect the drive belt.(L3 engine model) (See B3–25 DRIVE BELT INSPECTION.)
8. Fill the radiator with the specified amount and type of engine coolant. (See E–10 ENGINE COOLANT REPLACEMENT.)

L3

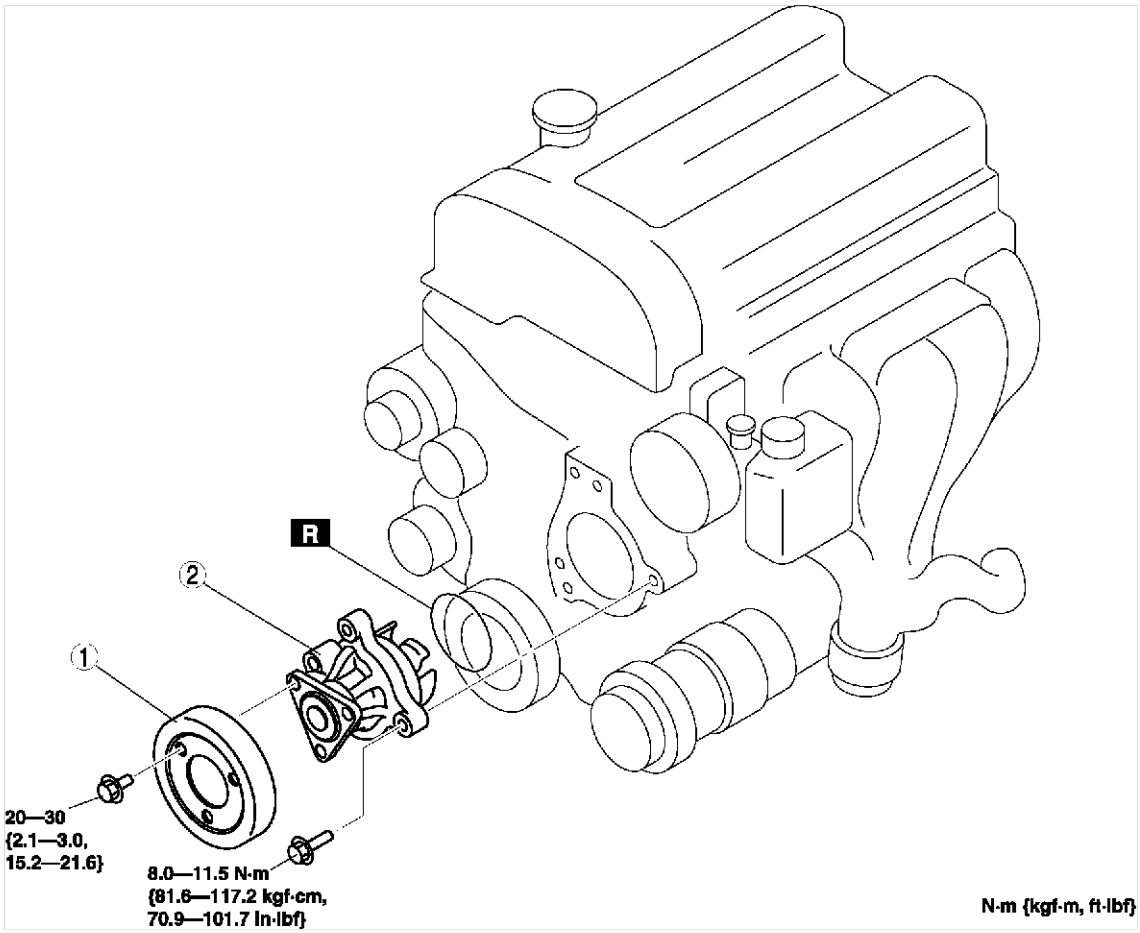

AME3620W001

1	Water pump pulley	2	Water pump

MZR-CD (RF Turbo)

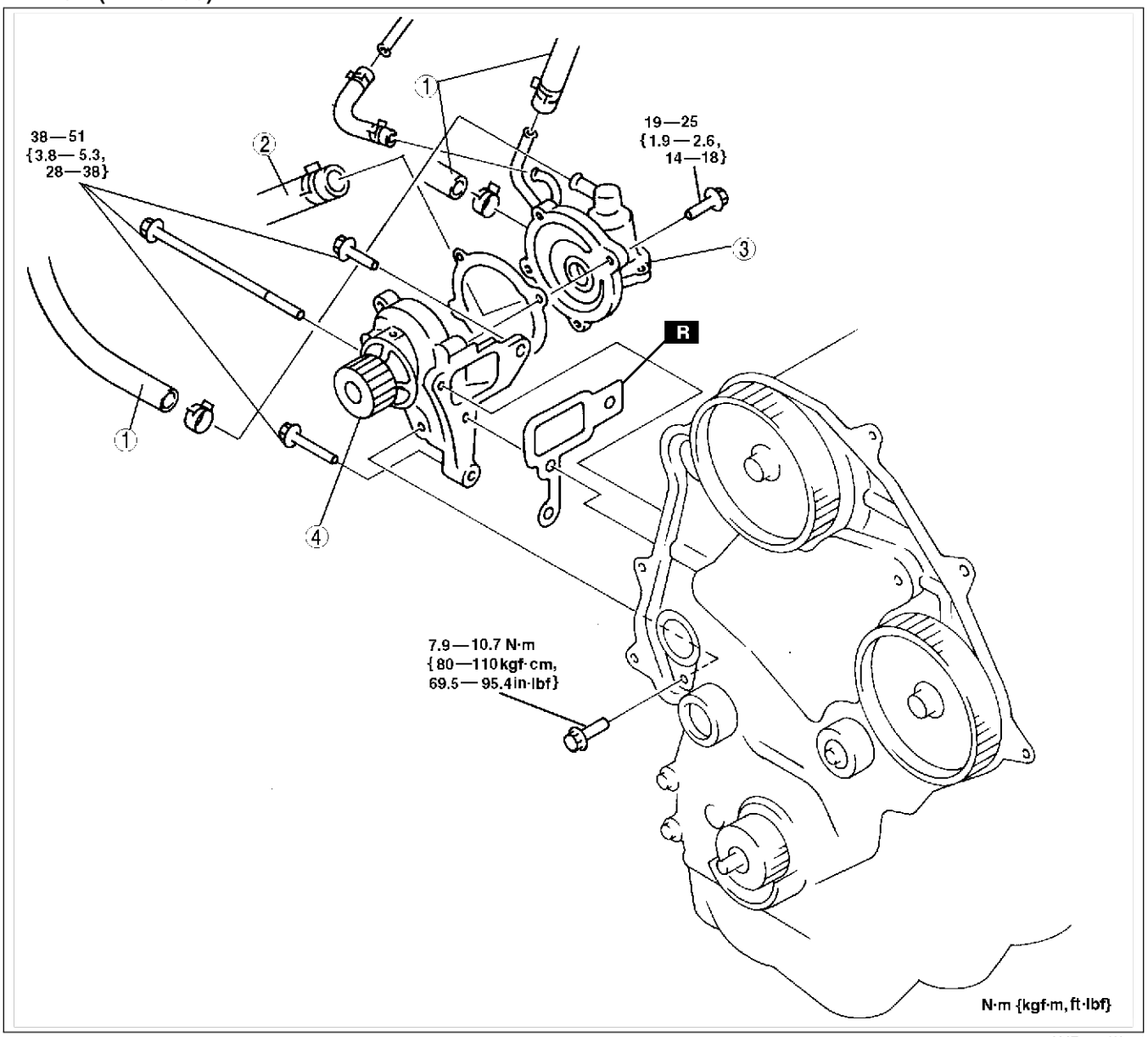

AME3620W004

1	Hose
2	Lower radiator hose

3	Thermostat case
4	Water pump

End Of Sie

FAN MOTOR

COOLING FAN MOTOR REMOVAL/INSTALLATION

AME362215025W01

1. Disconnect the negative battery cable.
2. Remove the radiator grill. (AJ engine model) (See S–24 RADIATOR GRILLE REMOVAL/INSTALLATION.)
3. Remove the transverse member. (See Section R.)
4. Remove the engine mount member.
5. Remove the radiator hose. (MZR-CD (RF Turbo) engine model) (See E–13 RADIATOR REMOVAL/INSTALLATION.)
6. Remove the No.2 engine mount.
7. Install in the reverse order of removal.

L3, MZR-CD (RF Turbo)

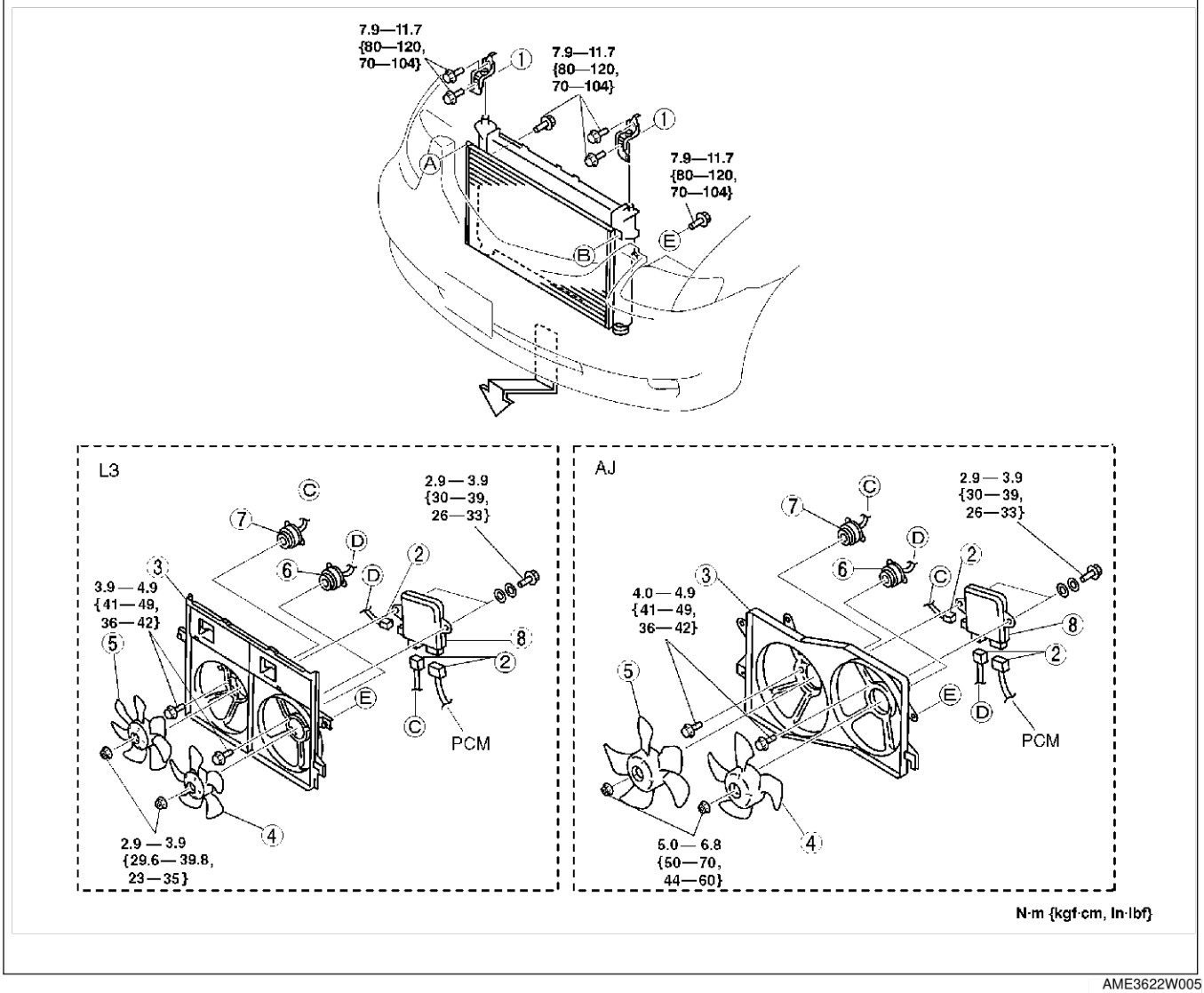

AME3622W005

1	Radiator bracket (AJ)
2	Fan control module connectors
3	Radiator cowling
4	Main fan

5	Additional fan
6	Main fan motor
7	Additional fan motor
8	Fan control module

MZR-CD (RF Turbo)

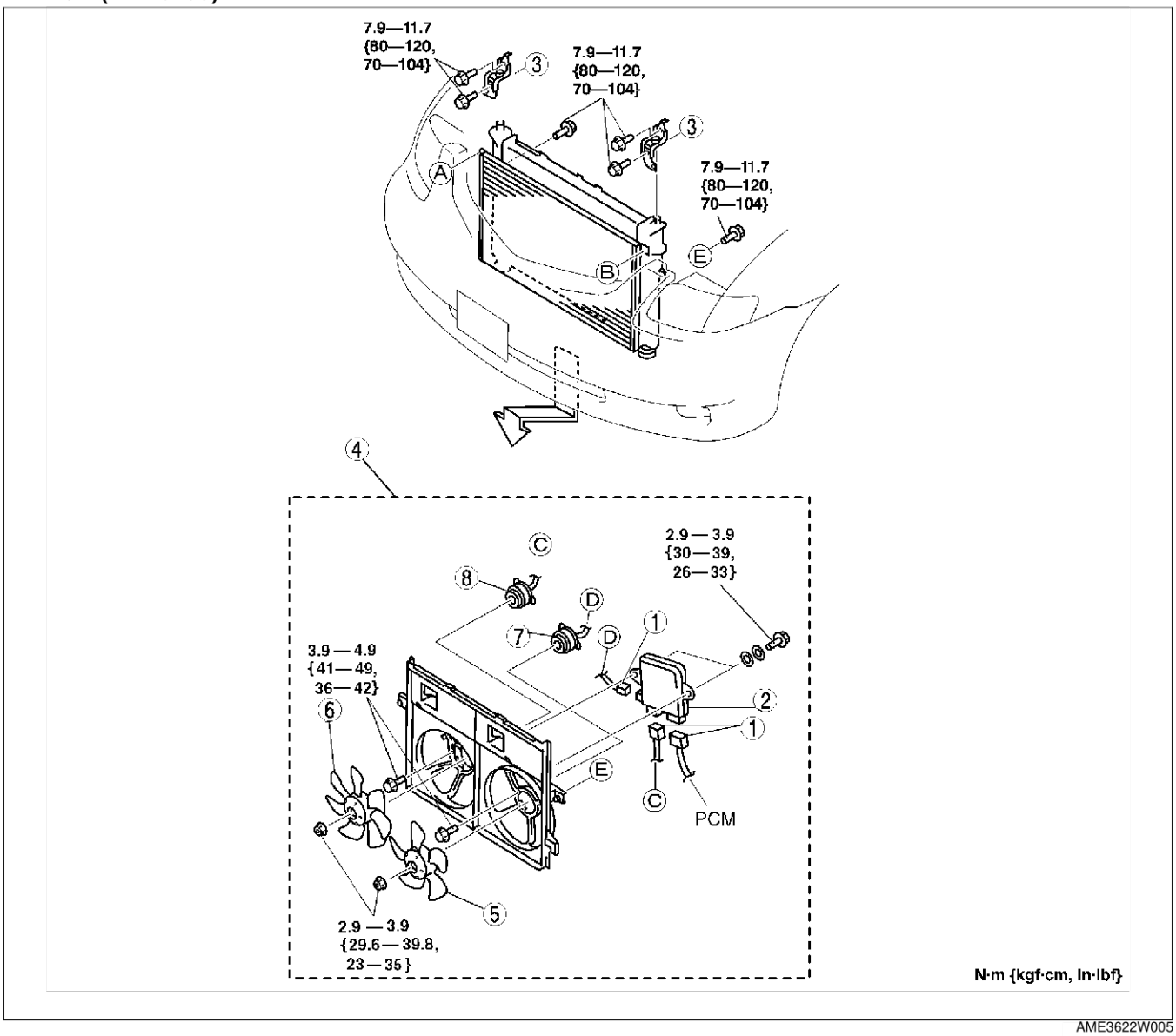

AME3622W005

1	Fan control module connector
2	Fan control module
3	Radiator bracket
4	Fan motor component

5	Main fan
6	Additional fan
7	Main fan motor
8	Additional fan motor

End Of Site

FAN CONTROL MODULE

FAN CONTROL MODULE INSPECTION

AME362315025W01

1. Remove the two bolts from the fan control module with the connectors still connected.
2. Start and warm up the engine.
3. Monitor the engine coolant temperature with the WDS or the equivalent.
4. Measure the voltage at terminal B of cooling fan motor connector from the harness side as shown in the table.

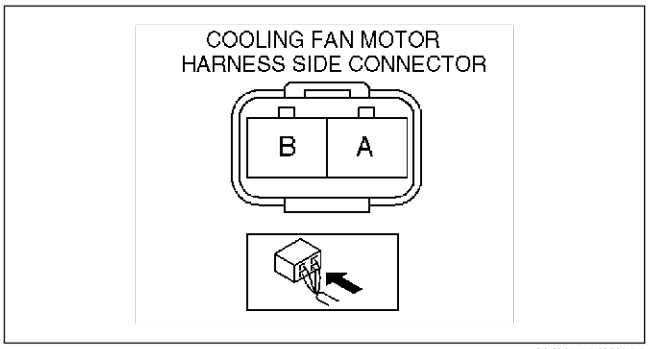

AMU0112W008

Inspection			Result
Condition	A/C	Engine coolant temp.	
IG SW ON	OFF	Below 95°C {203°F}	Fan stops.
IG SW ON (Idling)	OFF	Below 95°C {203°F}	Fan stops.
IG SW ON (Idling)	ON*	Below 95°C {203°F}	6.9V–12.1V
IG SW ON (Idling)	OFF	Above 100°C {212°F}	0.6V–14.6V

* : When the magnet clutch and the middle pressure SW are on.

- If not as specified, replace the fan control module.

End Of Sie

FUEL AND EMISSION CONTROL SYSTEMS [L3]

FEATURES

OUTLINE F3-4
- OUTLINE OF CONSTRUCTION F3-4
- FEATURES F3-4
- SPECIFICATIONS F3-4
- CONTROL SYSTEM DIAGRAM F3-5
- CONTROL SYSTEM WIRING DIAGRAM F3-6

INTAKE-AIR SYSTEM F3-13
- INTAKE-AIR SYSTEM OUTLINE F3-13
- INTAKE-AIR SYSTEM STRUCTURAL VIEW .. F3-14

FUEL SYSTEM F3-15
- FUEL SYSTEM OUTLINE F3-15
- FUEL SYSTEM STRUCTURAL VIEW F3-16
- FUEL PUMP UNIT DESCRIPTION F3-17

EXHAUST SYSTEM F3-18
- EXHAUST SYSTEM OUTLINE F3-18
- EXHAUST SYSTEM STRUCTURAL VIEW F3-18

EMISSION SYSTEM F3-19
- EMISSION SYSTEM OUTLINE F3-19
- EMISSION SYSTEM STRUCTURAL VIEW F3-20

CONTROL SYSTEM F3-21
- OUTLINE F3-21
- STRUCTURAL VIEW F3-23
- BLOCK DIAGRAM F3-24
- CONTROL DEVICES AND CONTROL RELATIONSHIP CHART F3-26
- CAMSHAFT POSITION (CMP) SENSOR F3-28
- CRANKSHAFT POSITION (CKP) SENSOR F3-28
- IDLE AIR CONTROL (IAC) F3-29
- VARIABLE INTAKE-AIR SYSTEM (VIS) F3-29
- VARIAVLE TUMBLE CONTROL SYSTEM (VTCS) F3-29
- FUEL INJECTION CONTROL F3-29
- A/C CUT-OFF CONTROL F3-30
- ELECTRIC FAN CONTROL F3-30

ON-BOARD DIAGNOSTIC F3-32
- OUTLINE F3-32
- CONTROL DEVICES AND MONITORING SYSTEM RELATIONSHIP CHART F3-32
- DIAGNOSTIC TEST MODE F3-32
- DTC F3-36
- PID/DATA MONITOR AND RECORD F3-41
- SIMULATION TEST F3-42
- KOEO/KOER SELF-TEST F3-43

SERVICE

LOCATION INDEX F3-45
- INTAKE-AIR SYSTEM F3-45
- FUEL SYSTEM F3-46
- EMISSION SYSTEM F3-47
- CONTROL SYSTEM F3-48

ENGINE TUNE-UP F3-49
- IGNITION TIMING INSPECTION F3-49
- IDLE SPEED INSPECTION F3-49
- IDLE MIXTURE INSPECTION F3-49

INTAKE-AIR SYSTEM F3-50
- VACUUM HOSE ROUTING DIAGRAM F3-50
- INTAKE-AIR SYSTEM REMOVAL/INSTALLATION F3-50
- IDLE AIR CONTROL (IAC) VALVE INSPECTION F3-52
- VARIABLE INTAKE-AIR SYSTEM (VIS) SHUTTER VALVE ACTUATOR INSPECTION F3-53
- VARIABLE INTAKE-AIR SYSTEM (VIS) CONTROL SOLENOID VALVE INSPECTION F3-53
- VARIABLE TUMBLE CONTROL SYSTEM (VTCS) SHUTTER VALVE ACTUATOR INSPECTION F3-54
- VARIABLE TUMBLE CONTROL SOLENOID VALVE INSPECTION F3-54
- ACCELERATOR PEDAL REMOVAL/INSTALLATION F3-55
- ACCELERATOR CABLE INSPECTION F3-55
- ACCELERATOR CABLE ADJUSTMENT F3-56

FUEL SYSTEM F3-57
- BEFORE REPAIR PROCEDURE F3-57
- AFTER REPAIR PROCEDURE F3-57
- FUEL LINE PRESSURE INSPECTION F3-58
- FUEL TANK REMOVAL/INSTALLATION F3-59
- FUEL TANK INSPECTION F3-61
- NONRETURN VALVE INSPECTION F3-62
- FUEL PUMP UNIT REMOVAL/INSTALLATION F3-62
- FUEL PUMP UNIT DISASSEMBLY/ASSEMBLY F3-65
- FUEL PUMP UNIT INSPECTION F3-65
- FUEL FILTER (HIGH-PRESSURE) REMOVAL/INSTALLATION F3-66
- FUEL INJECTOR REMOVAL/INSTALLATION F3-66
- FUEL INJECTOR INSPECTION F3-70
- PRESSURE REGULATOR INSPECTION F3-72
- PULSATION DAMPER REMOVAL/INSTALLATION F3-72
- PULSATION DAMPER INSPECTION F3-72

EXHAUST SYSTEM F3-73
- EXHAUST SYSTEM INSPECTION F3-73
- EXHAUST SYSTEM REMOVAL/INSTALLATION F3-73

EMISSION SYSTEM F3-75
EVAPORATIVE GAS CHECK VALVE (ONE-WAY) INSPECTION F3-75
CHARCOAL CANISTER REMOVAL/INSTALLATION F3-75
CHARCOAL CANISTER INSPECTION F3-75
CATCH TANK INSPECTION F3-76
PURGE SOLENOID VALVE REMOVAL/INSTALLATION F3-76
PURGE SOLENOID VALVE INSPECTION F3-76
EGR VALVE REMOVAL/INSTALLATION F3-77
EGR VALVE INSPECTION F3-78
PCV VALVE INSPECTION F3-79
THREE-WAY CATALYTIC CONVERTER (TWC) INSPECTION F3-79
CONTROL SYSTEM F3-81
PCM REMOVAL/INSTALLATION F3-81
PCM INSPECTION F3-83
INTAKE AIR TEMPERATURE (IAT) SENSOR INSPECTION F3-87
MASS AIR FLOW (MAF) SENSOR INSPECTION F3-88
THROTTLE POSITION (TP) SENSOR INSPECTION F3-88
MANIFOLD ABSOLUTE PRESSURE (MAP) SENSOR INSPECTION F3-89
ENGINE COOLANT TEMPERATURE (ECT) SENSOR REMOVAL/INSTALLATION F3-90
ENGINE COOLANT TEMPERATURE (ECT) SENSOR INSPECTION F3-90
CRANKSHAFT POSITION (CKP) SENSOR INSPECTION F3-91
CRANKSHAFT POSITION (CKP) SENSOR REMOVAL/INSTALLATION F3-91
CAMSHAFT POSITION (CMP) SENSOR INSPECTION F3-92
KNOCK SENSOR INSPECTION F3-93
KNOCK SENSOR REMOVAL/INSTALLATION F3-94
HEATED OXYGEN SENSOR (HO2S) INSPECTION F3-94
POWER STEERING PRESSURE (PSP) SWITCH INSPECTION F3-95
CLUTCH SWITCH INSPECTION F3-96
NEUTRAL SWITCH INSPECTION F3-97
BAROMETRIC PRESSURE (BARO) SENSOR INSPECTION F3-97
ON-BOARD DIAGNOSTIC F3-99
FOREWORD F3-99
OBD PENDING TROUBLE CODES F3-99
OBD FREEZE FRAME DATA F3-100
OBD ON-BOARD SYSTEM READINESS TEST F3-100
OBD DIAGNOSTIC MONITORING TEST RESULTS F3-100
OBD READ/CLEAR DIAGNOSTIC TEST RESULTS F3-100
OBD PARAMETER IDENTIFICATION (PID) ACCESS F3-100
ON-BOARD DIAGNOSTIC TEST F3-100
OBD DRIVE MODE F3-101
DIAGNOSTIC MONITORING TEST RESULTS F3-103
DTC CONFIRMATION PROCEDURE F3-103
KOEO/KOER SELF-TEST PROCEDURE F3-103
AFTER REPAIR PROCEDURE F3-104
DTC TABLE F3-104
DTC P0031 ..... F3-106
DTC P0032 ..... F3-108
DTC P0037 ..... F3-110
DTC P0038 ..... F3-112
DTC P0101 ..... F3-114
DTC P0102 ..... F3-116
DTC P0103 ..... F3-118
DTC P0107 ..... F3-120
DTC P0108 ..... F3-122
DTC P0111 ..... F3-124
DTC P0112 ..... F3-126
DTC P0113 ..... F3-128
DTC P0117 ..... F3-130
DTC P0118 ..... F3-132
DTC P0121 ..... F3-134
DTC P0122 ..... F3-138
DTC P0123 ..... F3-140
DTC P0125 ..... F3-142
DTC P0131, P0132 ..... F3-143
DTC P0133 ..... F3-146
DTC P0134 ..... F3-148
DTC P0138 ..... F3-150
DTC P0140 ..... F3-152
DTC P0171 ..... F3-154
DTC P0172 ..... F3-157
DTC P0300 ..... F3-158
DTC P0301, P0302, P0303, P0304 ..... F3-162
DTC P0327 ..... F3-164
DTC P0328 ..... F3-166
DTC P0335 ..... F3-168
DTC P0340 ..... F3-170
DTC P0403 ..... F3-172
DTC P0420 ..... F3-174
DTC P0443 ..... F3-176
DTC P0480 ..... F3-178
DTC P0500 ..... F3-180
DTC P0505 ..... F3-182
DTC P0506 ..... F3-183
DTC P0507 ..... F3-184
DTC P0511 ..... F3-186
DTC P0550 ..... F3-188
DTC P0661 ..... F3-190
DTC P0662 ..... F3-192
DTC P0703 ..... F3-194
DTC P0704 ..... F3-196
DTC P0850 ..... F3-198
DTC P1562 ..... F3-200
DTC P1602 ..... F3-202
DTC P1603 ..... F3-204
DTC P1604 ..... F3-205
DTC P1621 ..... F3-205
DTC P1622 ..... F3-206
DTC P1623 ..... F3-206
DTC P1624 ..... F3-207
DTC P2006 ..... F3-208
DTC P2009 ..... F3-210
DTC P2010 ..... F3-214
DTC P2228 ..... F3-214
DTC P2229 ..... F3-216
DTC P2502 ..... F3-218
DTC P2503 ..... F3-220
DTC P2504 ..... F3-222

TROUBLESHOOTING F3-224
ENGINE SYMPTOM TROUBLESHOOTING . F3-224
QUICK DIAGNOSTIC CHART F3-225
NO.1 MELTING OF MAIN OR OTHER FUSES F3-229
NO.2 MIL ILLUMINATES F3-230
NO.3 WILL NOT CRANK F3-230
NO.4 HARD TO START/LONG CRANK/ ERRATIC START/ERRATIC CRANK F3-232
NO.5 ENGINE STALLS -AFTER START/AT IDLE F3-234
NO.6 CRANKS NORMALLY BUT WILL NOT START F3-238
NO.7 SLOW RETURN TO IDLE F3-242
NO.8 ENGINE RUNS ROUGH/ROLLING IDLE F3-243
NO.9 FAST IDLE/RUNS ON F3-246
NO.10 LOW IDLE/STALLS DURING DECELERATION F3-247
NO.11 ENGINE STALLS/QUITS, ENGINE RUNS ROUGH, MISSES, BUCK/JERK, HESITATION/ STUMBLE, SURGES F3-248
NO.12 LACK/LOSS OF POWER-ACCELERATION/ CRUISE F3-251
NO.13 KNOCKING/PINGING-ACCELERATION/ CRUISE F3-253
NO.14 POOR FUEL ECONOMY F3-254
NO.15 EMISSION COMPLIANCE F3-256
NO.16 HIGH OIL CONSUMPTION/LEAKAGE F3-257
NO.17 COOLING SYSTEM CONCERNS -OVERHEATING F3-258
NO.18 COOLING SYSTEM CONCERNS -RUNS COLD F3-259
NO.19 EXHAUST SMOKE F3-260
NO.20 FUEL ODOR (IN ENGINE COMPARTMENT) F3-261
NO.21 ENGINE NOISE F3-262
NO.22 VIBRATION CONCERNS (ENGINE) .. F3-263
NO.23 A/C DOES NOT WORK SUFFICIENTLY F3-263
NO.24 A/C IS ALWAYS ON OR A/C COMPRESSOR RUNS CONTINUOUSLY F3-264
NO.25 A/C IS NOT CUT OFF UNDER WIDE OPEN THROTTLE CONDITIONS F3-264
NO.26 EXHAUST SULPHUR SMELL F3-265
NO.27 CONSTANT VOLTAGE F3-266
NO.28 SPARK PLUG CONDITION F3-268
INTERMITTENT CONCERN TROUBLESHOOTING F3-270
ENGINE CONTROL SYSTEM OPERATION INSPECTION F3-271

OUTLINE

OUTLINE OF CONSTRUCTION

AME410218881W01

- The new MPV (LW) has been equipped with the new engine (L3). The features of the L3 engine is as follows.

End Of Sec

FEATURES

AME410218881W02

System simplification

- Mechanical returnless fuel system has been adopted.

Improved engine performance

- Variable intake-air system (VIS) has been adopted to improve engine torque characteristics and combustion efficiency.

Improved emission performance

- Variable tumble control system (VTCS) has been adopted.
- New fuel injection timing control has been adopted.
- Manifold absolute pressure correction has been adopted to IAC control and fuel injection control.

Improved serviceability

- Nonadjustable ignition timing has been adopted.
- Nonadjustable IAC has been adopted.
- Quick release connectors have been adopted on all joints of fuel lines.
- KOEO/KOER self-test function has been adopted.
- Pending code storage process has been changed.
- MIL illumination conditions for the second drive cycle type have been changed.

End Of Sec

SPECIFICATIONS

AME410218881W03

Item		Speciufication	
Item		New MPV (LW) L3 engine model	Previous MPV (LW) FS engine model
Air cleaner element	Type	Paper element (dry type)	Paper element (oil permeated)
IAC valve	Type	Duty control	
Fuel injector	Type	Hi-ohmic	
	Type of fuel delivery	Top-feed	
	Type of drive	Voltage	
Pressure regulator	Regulating pressure (kPa {kgf/cm^2, psi})	387—397 {3.9—4.0, 56—58}	280 {2.9, 41}
Fuel tank	Capacity (L {US qt, Imp qt})	75 {79, 66}	70 {74, 62}
Fuel	Specification	Unleaded (RON 95 or above)	
Catalyst	Type	WU-TWC, TWC (monolythic)	TWC (monolythic)
EGR control	Type	Stepping motor type	
Evaporative emission control system	Type	Canister type	
PCV system	Type	Closed type	

End Of Sec

CONTROL SYSTEM DIAGRAM

AME410218881W04

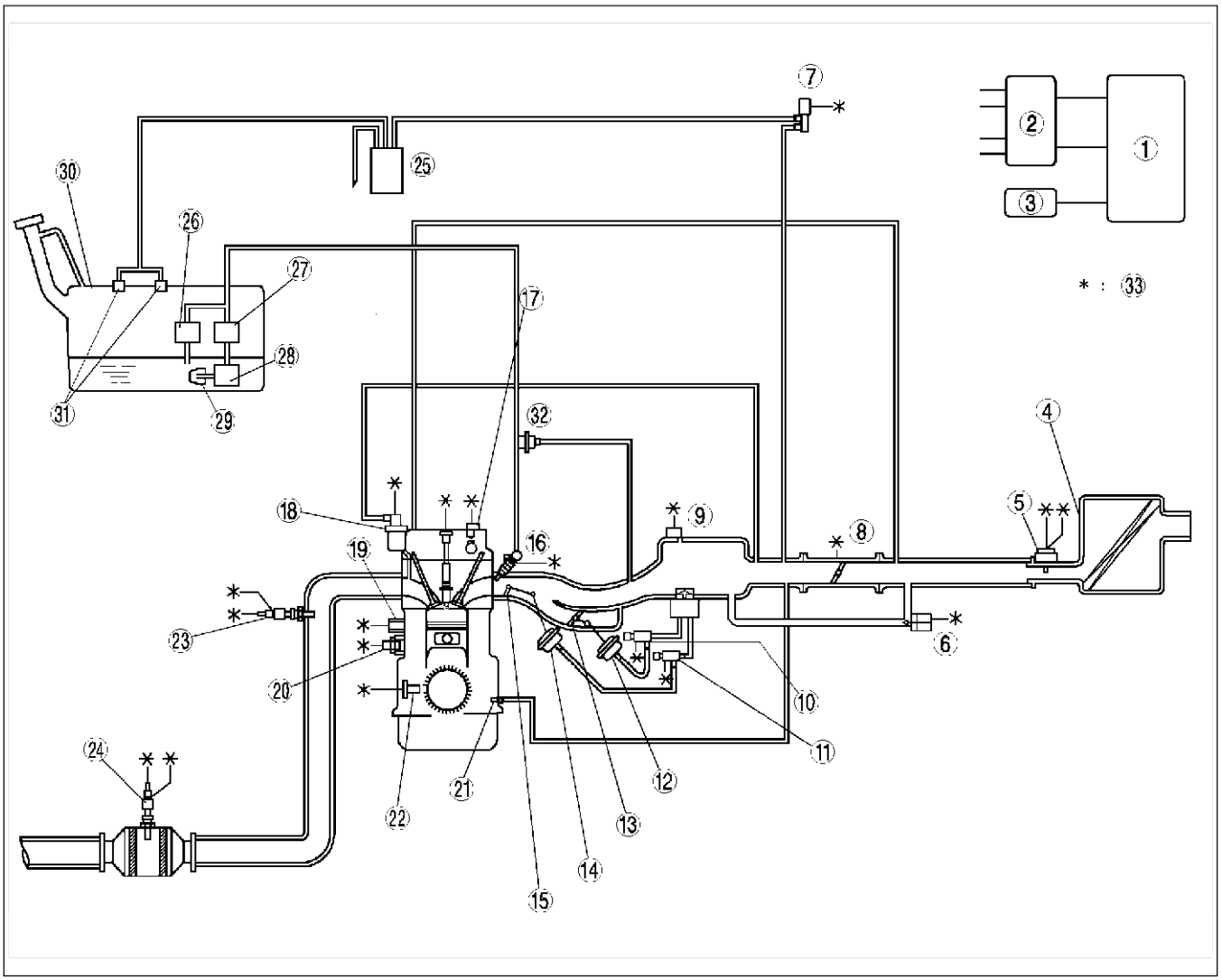

AME4102W001

1	PCM
2	Ignition coil
3	Generator
4	Air cleaner
5	MAF/IAT sensor
6	IAC valve
7	Purge solenoid valve
8	TP sensor
9	MAP sensor
10	VIS control solenoid valve
11	Variable tumble control solenoid valve
12	VIS shutter valve actuator
13	VIS shutter valve
14	VTCS shutter valve actuator
15	VTCS shutter valve
16	Fuel injector
17	CMP sensor

18	EGR valve
19	Knock sensor
20	ECT sensor
21	PCV valve
22	CKP sensor
23	Heated oxygen sensor (front)
24	Heated oxygen sensor (rear)
25	Charcoal canister
26	Pressure regulator
27	Fuel filter (high pressure)
28	Fuel pump
29	Fuel filter (low pressure)
30	Fuel tank
31	Rollover valve
32	Pulsation damper
43	To PCM

End Of Sie

CONTROL SYSTEM WIRING DIAGRAM

AME410218881W05

With Immobilizer System

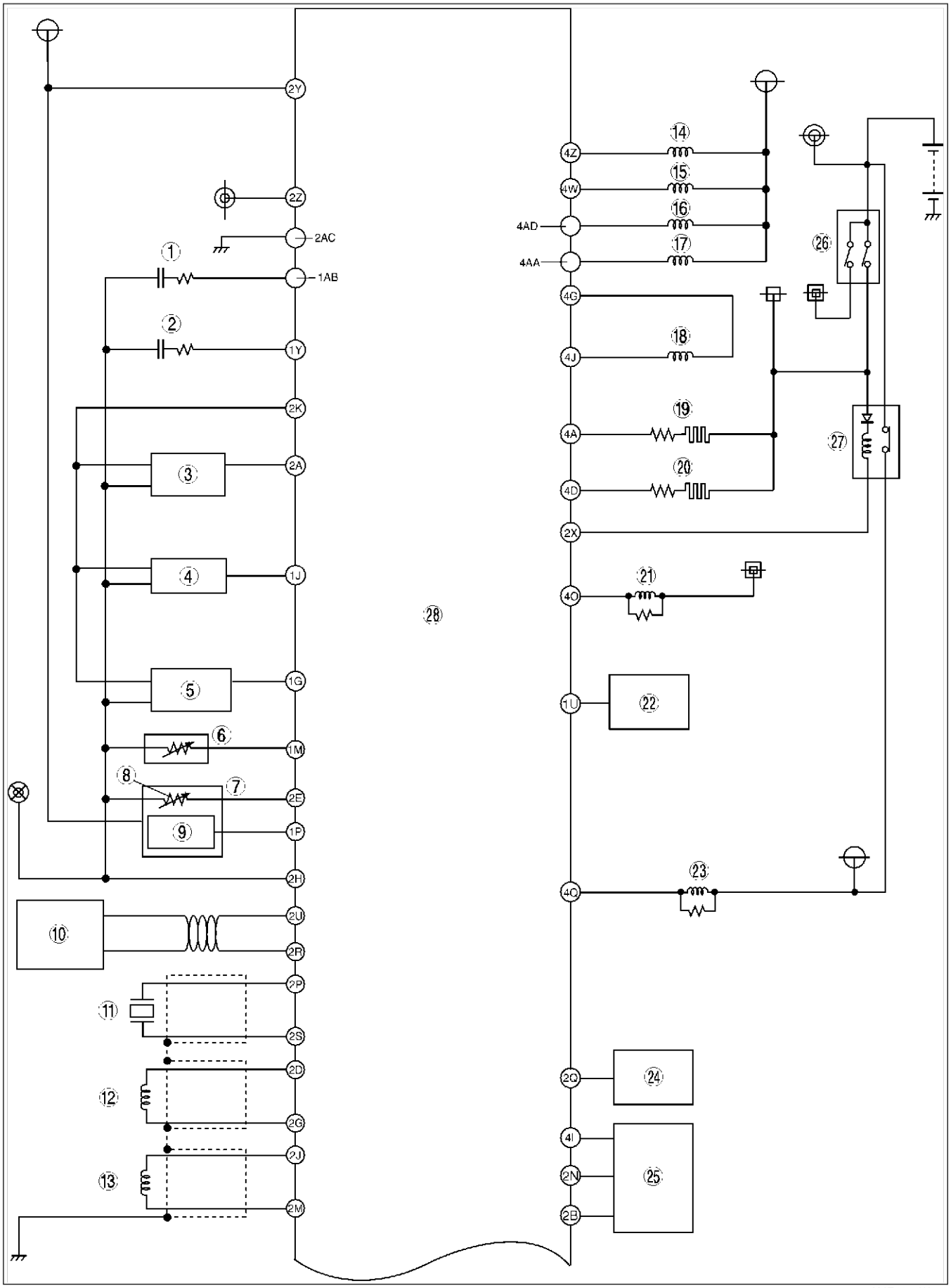

AME4102W002

1	Heated oxygen sensor (front)
2	Heated oxygen sensor (rear)
3	TP sensor
4	MAP sensor
5	BARO sensor
6	ECT sensor
7	MAF/IAT sensor
8	IAT sensor
9	MAF sensor
10	DLC-2
11	Knock sensor
12	CKP sensor
13	CMP sensor
14	Fuel injector No.1
15	Fuel injector No.2
16	Fuel injector No.3
17	Fuel injector No.4
18	IAC valve
19	Oxygen sensor heater (front)
20	Oxygen sensor heater (rear)
21	A/C relay
22	Fan control mpodule
23	Fuel pump relay
24	Immobilizer unit
25	Instrument cluster
26	Ignition switch
27	Main relay
28	PCM

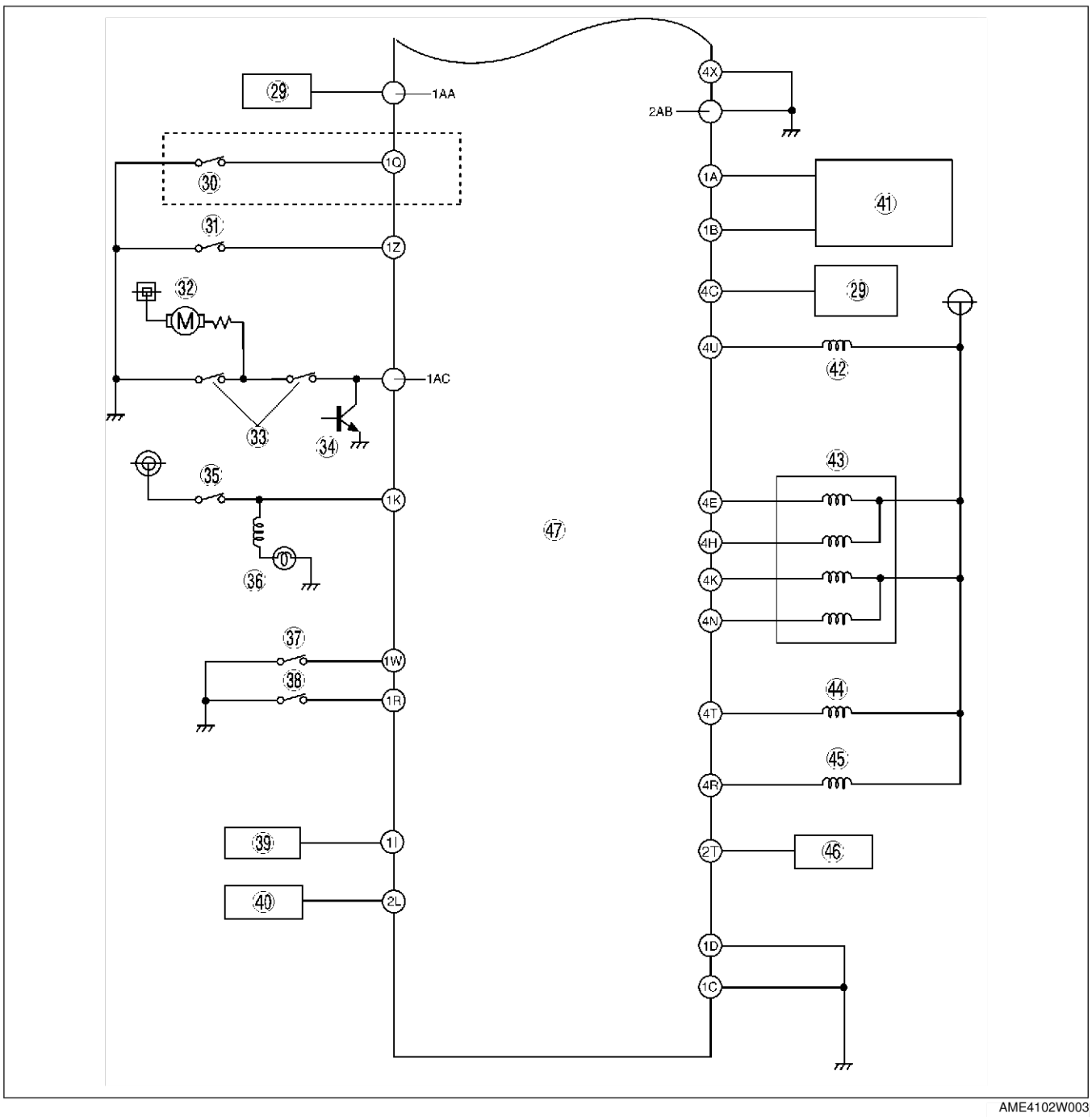

AME4102W003

29	Generator
30	Refrigerant pressure switch (middle)
31	PSP switch
32	Blower motor
33	Refrigerant pressure switch (high and low)
34	A/C switch
35	Brake switch
36	Stop light
37	Neutral switch
38	Clutch switch
39	DLC
40	Instrument cluster
41	Ignition coil
42	Purge solenoid valve
43	EGR valve
44	Variable tumble control solenoid valve
45	VIS control solenoid valve
46	Instrument cluster
47	PCM

Without Immobilizer system

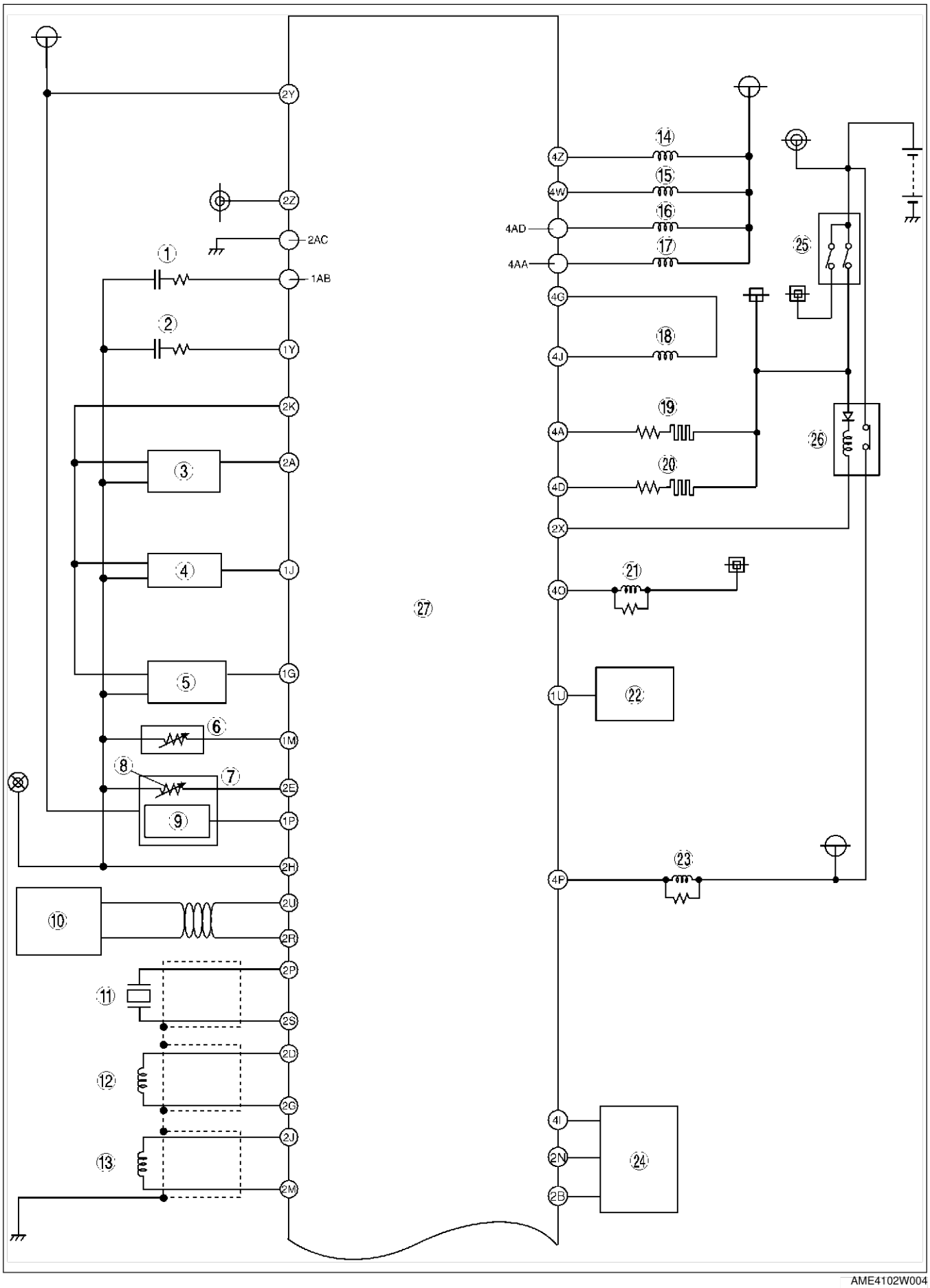

AME4102W004

1	Heated oxygen sensor (front)
2	Heated oxygen sensor (rear)
3	TP sensor
4	MAP sensor
5	BARO sensor
6	ECT sensor
7	MAF/IAT sensor
8	IAT sensor
9	MAF sensor
10	DLC-2
11	Knock sensor
12	CKP sensor
13	CMP sensor
14	Fuel injector No.1
15	Fuel injector No.2
16	Fuel injector No.3
17	Fuel injector No.4
18	IAC valve
19	Oxygen sensor heater (front)
20	Oxygen sensor heater (rear)
21	A/C relay
22	Fan control mpodule
23	Fuel pump relay
24	Instrument cluster
25	Ignition switch
26	Main relay
27	PCM

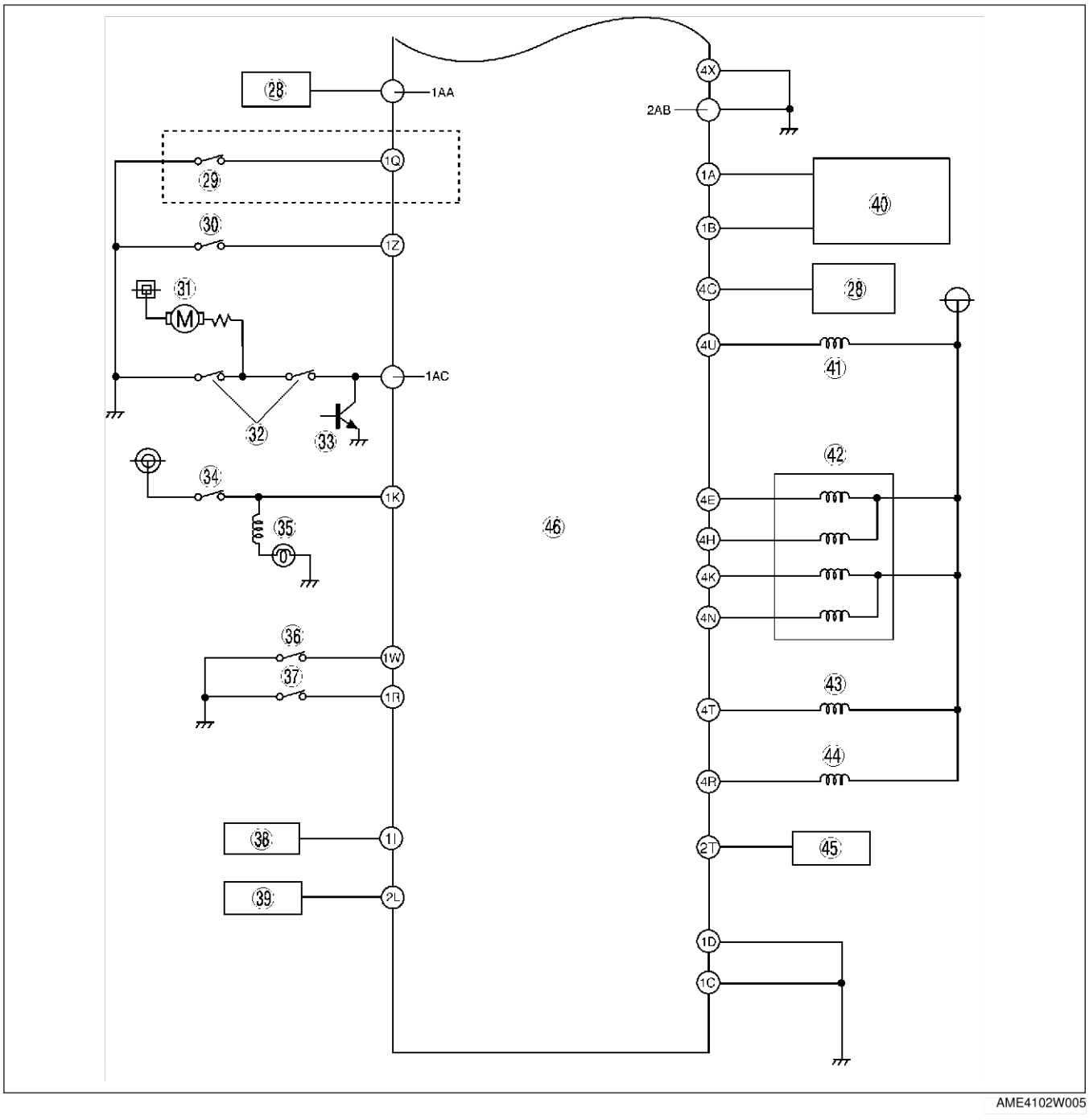

28	Generator
29	Refrigerant pressure switch (middle)
30	PSP switch
31	Blower motor
32	Refrigerant pressure switch (high and low)
33	A/C switch
34	Brake switch
35	Stop light
36	Neutral switch
37	Clutch switch

38	DLC
39	Instrument cluster
40	Ignition coil
41	Purge solenoid valve
42	EGR valve
43	Variable tumble control solenoid valve
44	VIS control solenoid valve
45	Instrument cluster
46	PCM

End Of Sie

INTAKE-AIR SYSTEM

INTAKE-AIR SYSTEM OUTLINE

AME411013000W01

- The function, structure and operation of each part in the intake-air system of the new MPV (LW) L3 engine model are essentially carried over from the previous MPV (LW) FS engine models, except for the following:
  — A non AAS type throttle body has been adopted to improved serviceability
  — A resin intake manifold has been adopted to reduce weight
  — Variable intake-air system (VIS) has been adopted. Same function as VICS of previous MPV (LW) FS engine models.
  — Variable tumble controlsystem (VTCS) has been adopted.

× : Applied
–: Not applied

Item	New MPV (LW) L3	Previous MPV (LW) FS	Remark for new model
Fresh-air duct	×		Same as previous MPV (LW) FS engine models
Resonance chamber	×		Same function as resonance chamber No.1 of previous MPV (LW) FS engine models
Air cleaner	×		Same as previous MPV (LW) FS engine models
Throttle body	×		Same function as previous MPV (LW) FS engine models AAS has been eliminated due to automatic adjustment of idle speed.
IAC valve	×		Same function as previous MPV (LW) FS engine models
Intake manifold	×		Same function as previous MPV (LW) FS engine models
Dynamic chamber	×		Same function as previous MPV (LW) FS engine models
VIS	×		Same function as VICS of previous MPV (LW) FS engine models
VTCS	×	–	Same function as current MX-5 (NB) BP engine models

End Of Sta

INTAKE-AIR SYSTEM STRUCTURAL VIEW

AME411013000W02

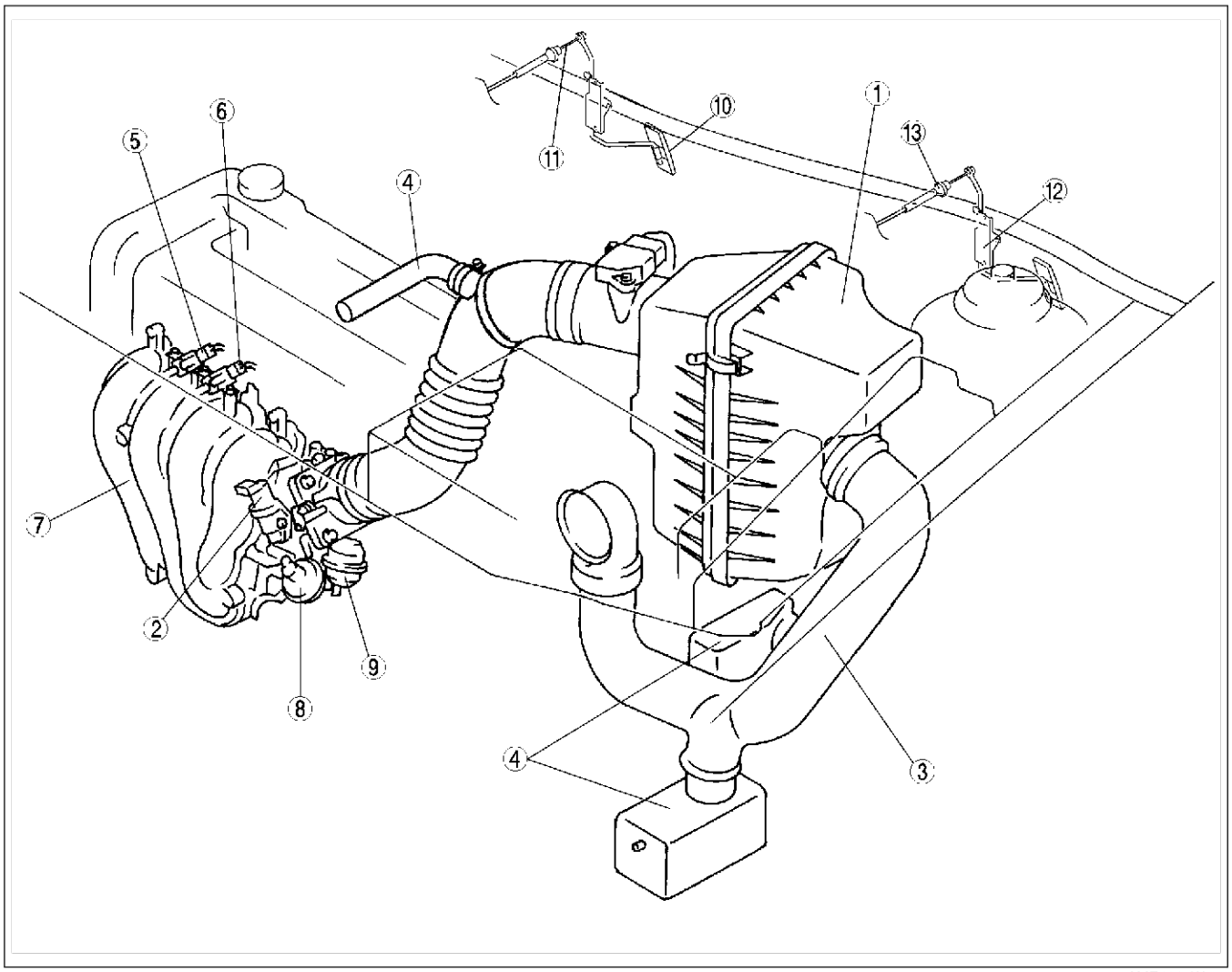

AME4110W002

1	Air cleaner
2	IAC valve
3	Fresh-air duct
4	Resonance chamber
5	VIS solenoid valve
6	Variable tumble control solenoid valve
7	Intake manifold

8	VIS shutter valve actuator
9	VTCS shutter valve actuator
10	Accelerator pedal (R.H.D.)
11	Accelerator cable (R.H.D.)
12	Accelerator pedal (L.H.D.)
13	Accelerator cable (L.H.D.)

End Of Sio

FUEL SYSTEM

FUEL SYSTEM OUTLINE

AME411201006W01

- The function, structure and operation of each part in the fuel system of the new MPV (LW) L3 engine model are the same as those of the previous MPV (LW) FS engine models except for the following:
  — Mechanical returnless fuel system has been adopted.

× : Applied

Item	New MPV (LW) L3	Previous MPV (LW) FS	Remark for new model
Fuel tank	×		Same function as previous MPV (LW) FS engine models Fuel tank capacity has been increased.
Fuel pump unit (Buelt-in fuel filter (high-and low-pressure))	×		Same as previous MPV (LW) FS engine models
Quick release connector (fuel tank side)	×		Same as previous MPV (LW) FS engine models (engine room side)
Quick release connector (engine room side)	×		Same as previous MPV (LW) FS engine models
Pulsation dumper	×		Same function as previous MPV (LW) FS engine models
Pressuer regulator	×		Integrated into the fuel pump unit
Fuel injector	×		Same function as previous MPV (LW) FS engine models
Nonreturn valve	×		Same as previous MPV (LW) FS engine models

End Of Sub

FUEL SYSTEM STRUCTURAL VIEW

AME411201006W02

Engine Room Side

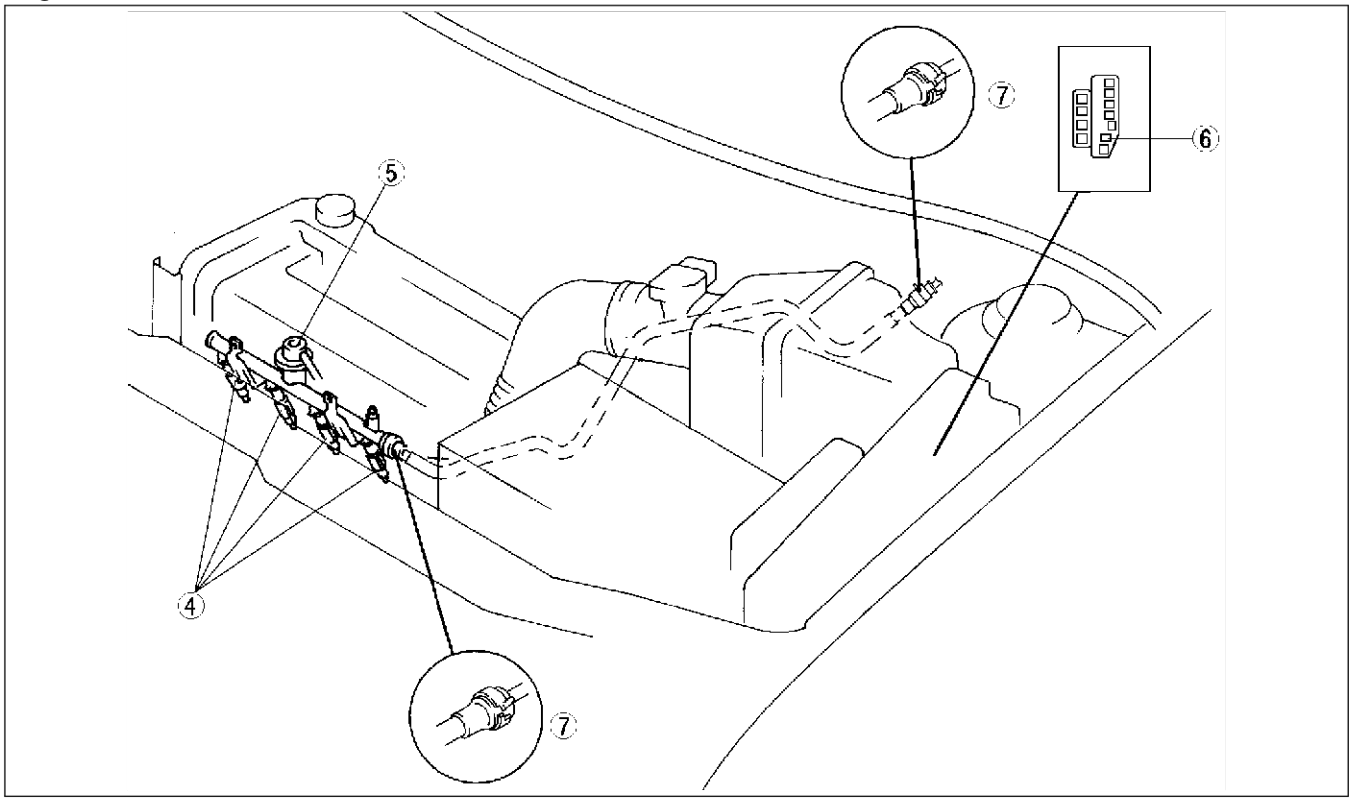

AME4112W002

FUEL TANK SIDE

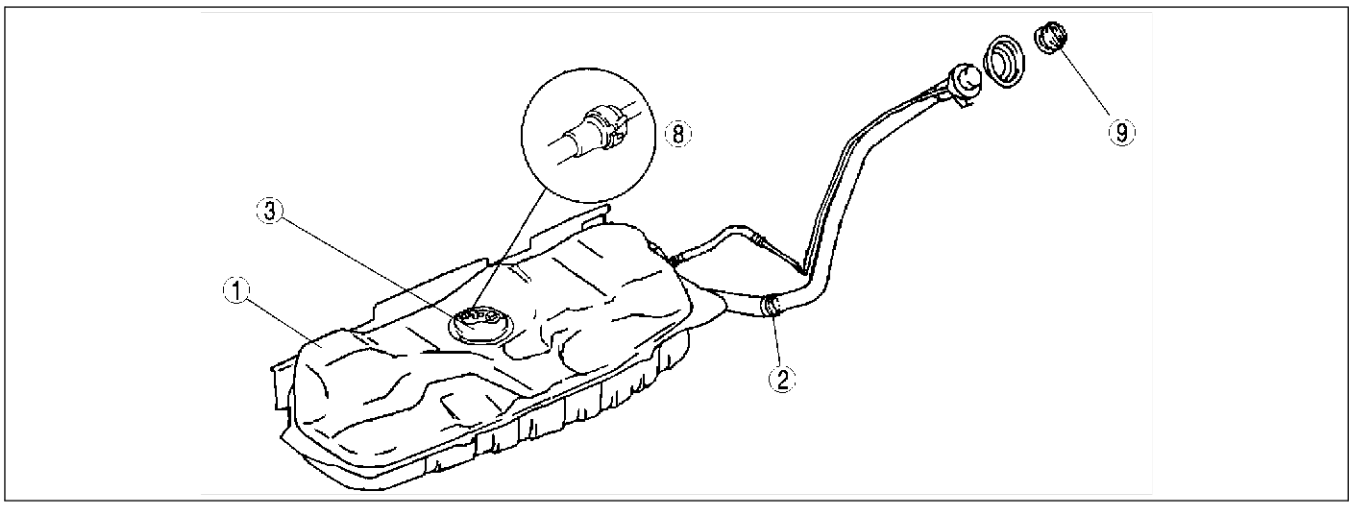

AME4112W003

1	Fuel tank
2	Nonreturn valve
3	Fuel pump unit
4	Fuel injector
5	Pulsation damper

6	Fuel pump relay
7	Quick release connector (engine room side)
8	Quick release connector (fuel tank side)
9	Fuel filler cap

End Of Sie

FUEL PUMP UNIT DESCRIPTION

AME411213350W01

Structure

- Due to the adoption of the mechanical returnless fuel system, the fuel pressure regulator has been built in the fuel pump unit.

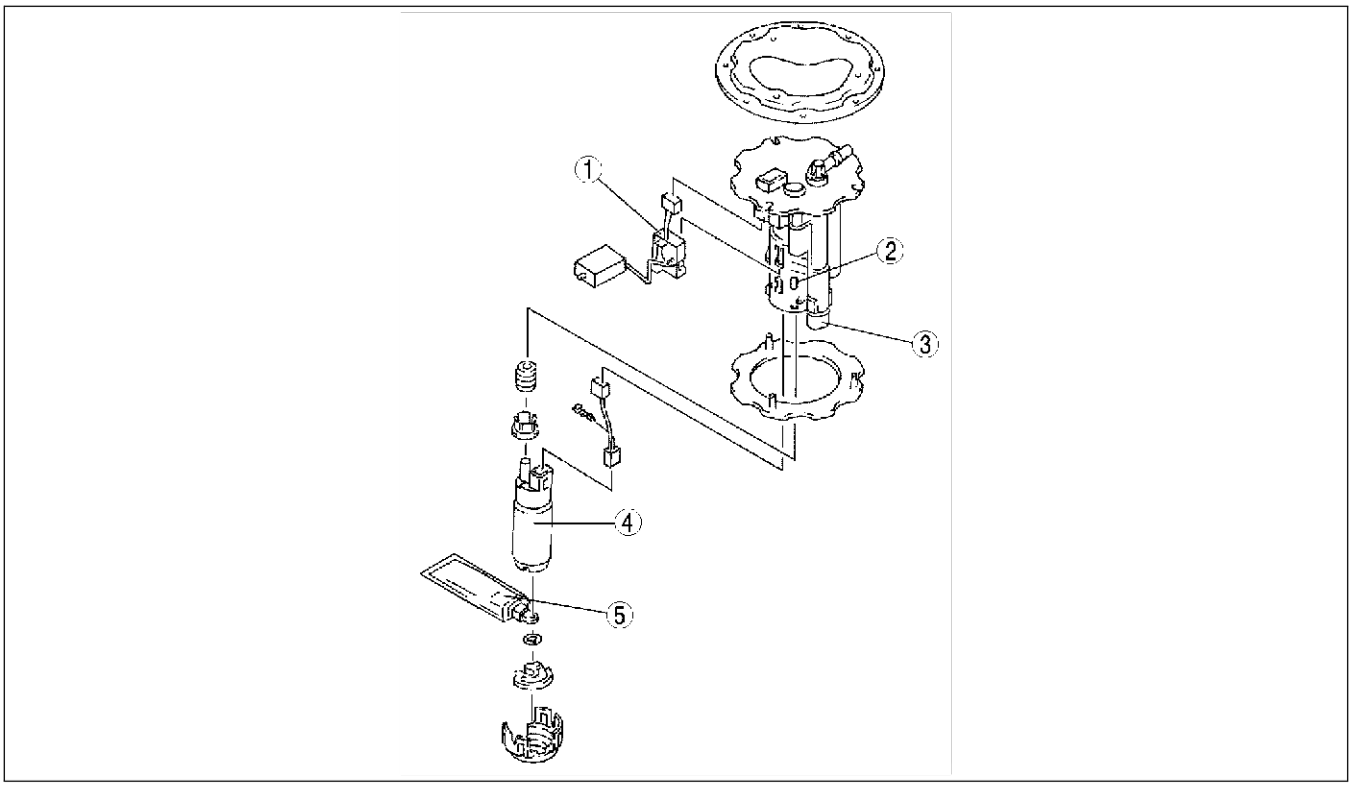

AME4112W014

Fuel flow

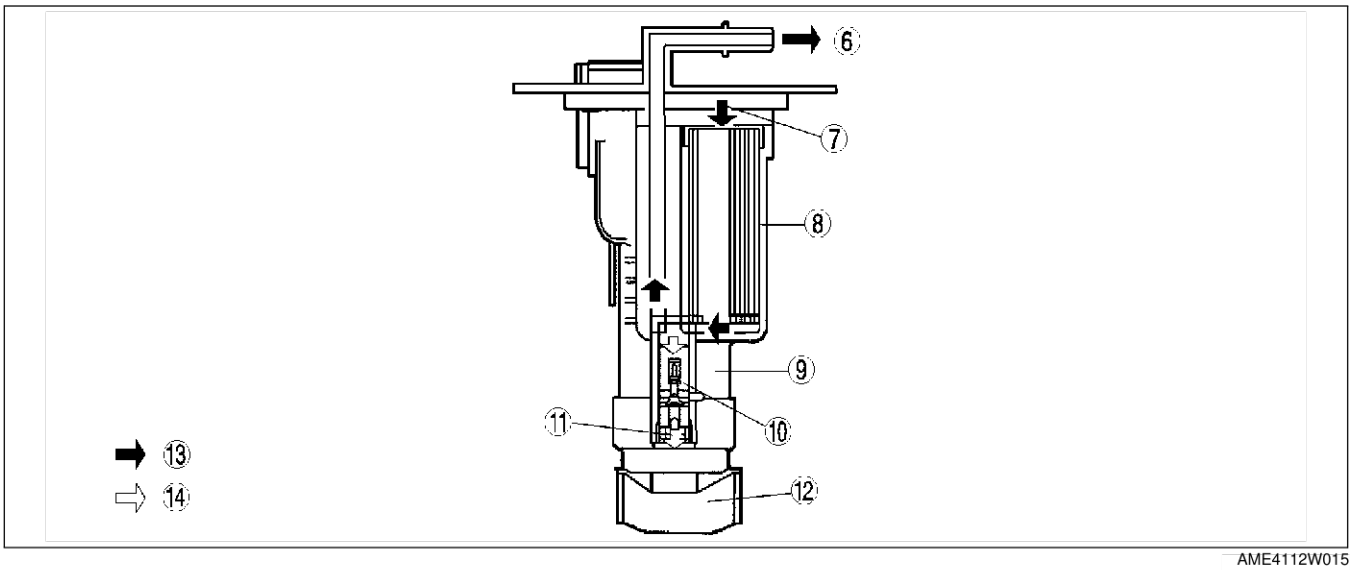

AME4112W015

1	Fuel gauge sender unit
2	Fuel filter (high-pressure)
3	Pressure regulator
4	Fuel pump
5	Fuel filter (low-pressure)
6	To fuel distributor
7	From fuel pump

8	Fuel filter (high-pressure)
9	Fuel pump
10	Pressure regulator
11	Return to fuel tank
12	Fuel filter (low-pressure)
13	Main fuel flow
14	Return fuel flow

End Of Sie

EXHAUST SYSTEM

EXHAUST SYSTEM OUTLINE

AME411440000W01

Features

- The exhaust manifold is located behind the engine.
- This layout allows for shorter exhaust pipes and improved exhaust efficiency. Moreover, due to the shorter distance to the catalytic converter, temperature decrease of exhaust emission is prevented and catalyst is more efficient.
- Temperature decrease of exhaust emission is further prevented with double layer exhaust manifold pipes.

End Of Sub

EXHAUST SYSTEM STRUCTURAL VIEW

AME411440000W02

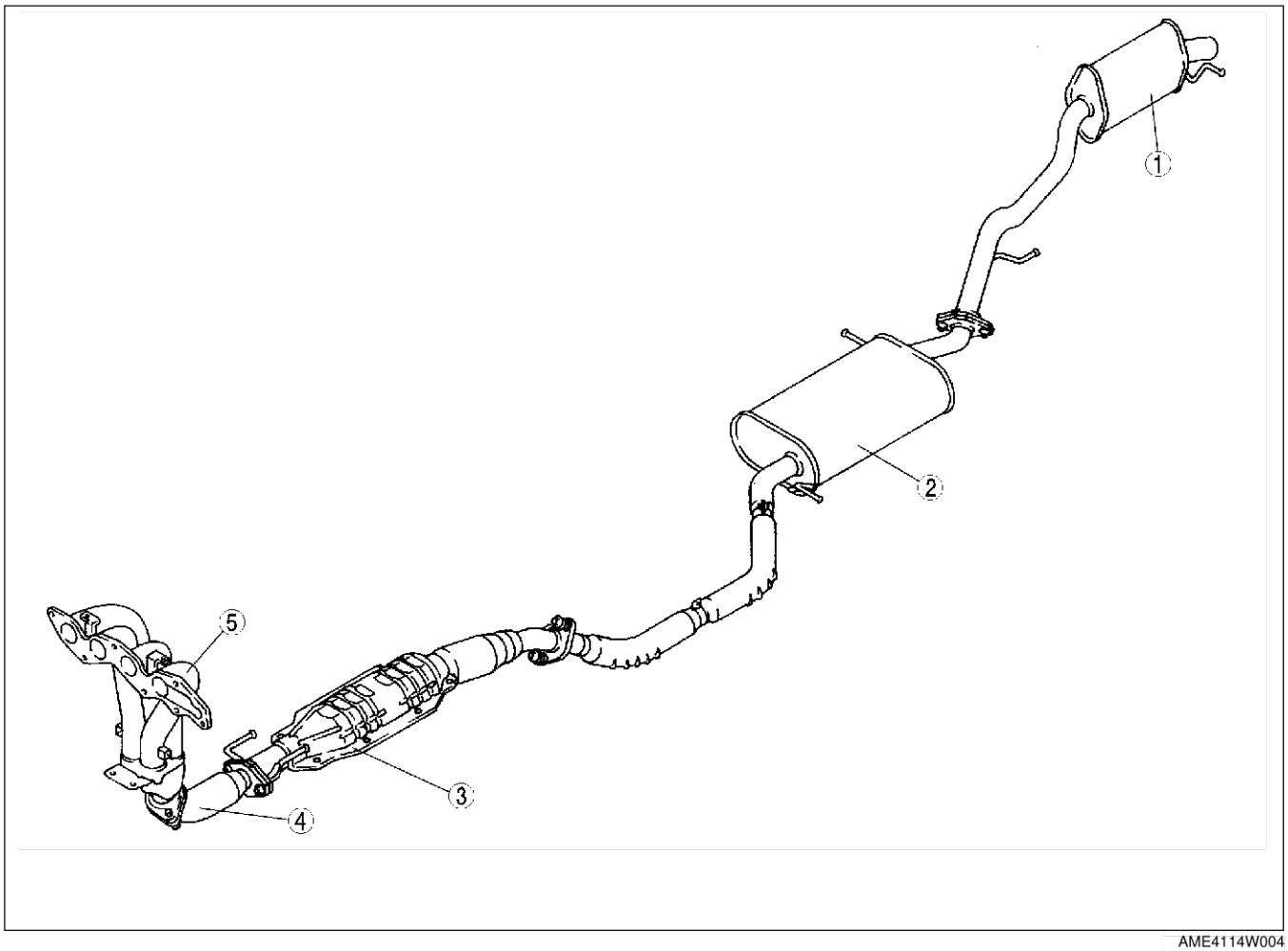

AME4114W004

1	After silencer
2	Main silencer
3	TWC

4	Front pipe
5	Exhaust manifold

End Of Sub

EMISSION SYSTEM

EMISSION SYSTEM OUTLINE

AME411601007W01

- The function, structure and operation of each part in the emission system of the new MPV L3 engine model are the basically same as those of the previous MPV (LW) FS engine models, except for the following:

× : Applied

Item	New MPV (LW) L3	Previous MPV (LW) FS	Remark for new model
Rollover valve	×		Same as previous MPV (LW) FS engine models
Charcoal canister	×		Same as previous MPV (LW) FS engine models
Evaporativve gas check valve (one-way)	×		Same as previous MPV (LW) FS engine models
Purge solenoid valve	×		Same as previous MPV (LW) FS engine models
PCV valve	×		Same function and operation as previous MPV (LW) FS engine models
TWC	×		Same function as previous MPV (LW) FS engine models
EGR valve	×		Same function and operation as previous MPV (LW) FS engine models

End Of Sta

EMISSION SYSTEM STRUCTURAL VIEW

AME411601007W02

Engine Room Side

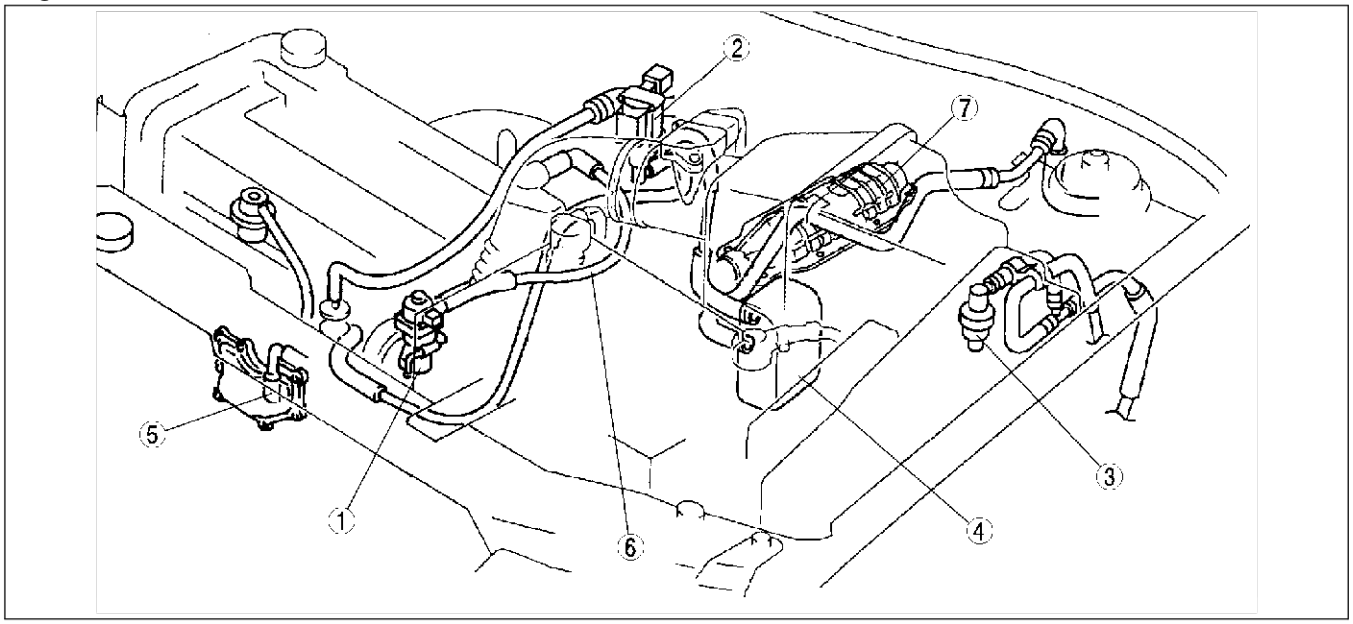

AME4116W001

Fuel Tank Side

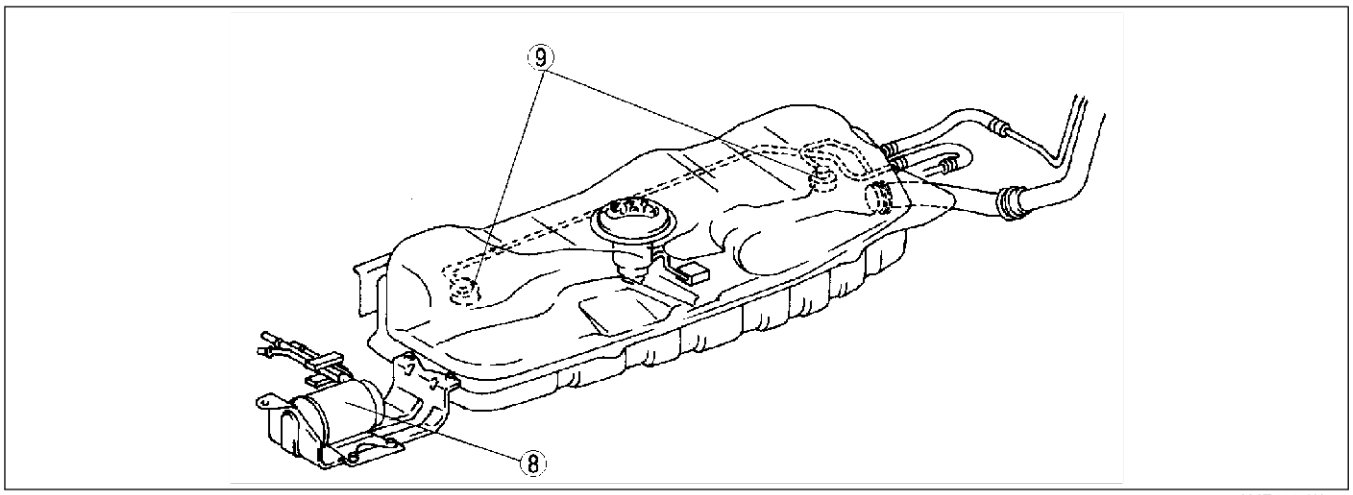

AME4116W002

1	EGR valve
2	Purge solenoid valve
3	Evaporative gas check valve (one-way)
4	Catch tank
5	PCV valve

6	Ventilation hose
7	TWC
8	Charcoal canister
9	Rollover valve

End Of Sie

CONTROL SYSTEM

OUTLINE

AME414018881W01

- The construction and operation of the new MPV (LW) L3 engine model is essentially carried over from that of the previous MPV (LW) FS engine model, except for the following.

New Devices
- MAP sensor which monitoring the intake manifold absolute pressure is same function as BARO sensor.

Similar Devices
CKP sensor
- Output wave form is different.

CMP sensor
- Output wave form is different.

New Systems
Electric fan control module
- To simplified the system

ECT signal for water temperature gauge
- To simplified the system

Similar Systems
Idle air control (IAT)
- Same funcrtion as previous MPV (LW) FS engine model but follwings are different.
  - — Adopt the MAP factor to the feedback correction to improve the precise control
  - — Idle speed is different to much the vehicle characteristics.

Variable intake-air system (VIS)
- Same function as VICS but operation condition is different to much the vehicle characteristics.

Variable tumble control system
- Same function as MX-5 (NB) but operation condition is different to much the vehicle characteristics.

Fuel injection control
- Fuel injection timing is different to improve the fuel economy and emission performance.
-

Electronic spark advance (ESA) control
- Same control as previous 626 (GF) FS engine model

Purge control
- Adopt the BARO correction to improve the emission performance

Heated oxygen sensor heater control
- Same control as current 323 (BJ) FS engine model

A/C cut-off control
- Operation condition is different to much the vehicle charateristics.

Input Device

×:Applied —: Not applied

Item	Signal	New MPV (LW) L3	Previous MPV (LW) FS	Remark for new model
MAF/IAT sensor	MAF and IAT	×		Same as current 323 (BJ) ZM engine model
TP sensor	TP	×		Same function as previous MPV (LW) FS engine model
MAP sensor	MAP	×	—	Same function as BARO sensor of previous MPV (LW) FS engine model
ECT sensor	ECT	×		Same function as previous MPV (LW) FS engine model
CMP sensor	Cylinder identification	×		Same function as previous MPV (LW) FS engine model Output wave form is different.
CKP sensor	Engine revolution	×		Same function as previous MPV (LW) FS engine model Output wave form is different.
Knock sensor	Knocking	×		Same function as previous MPV (LW) FS engine model

Item	Signal	New MPV (LW) L3	Previous MPV (LW) FS	Remark for new model
HO2S (Front, Rear)&	Oxygen concentration	×		Same function as previous MPV (LW) FS engine model
BARO sensor	BARO	×		Same as previous MPV (LW) FS engine model
Neutral switch	Load/no load distinction	×		Same as previous MPV (LW) FS engine model
Clutch switch	Load/no load distinction	×		Same as previous MPV (LW) FS engine model
Brake switch	Brake pedal condition	×		Same as previous MPV (LW) FS engine model
PSP switch	P/S oil pump load condition	×		Same function as previous MPV (LW) FS engine model
VSS	Vehicle speed	×		Same as previous MPV (LW) FS engine model
A/C switch, refrigerant pressure switch (high, low pressure)	A/C operational	×		Same as previous MPV (LW) FS engine model
Refrigerant pressure switch (middle pressure)	A/C compressor load	×		Same as previous MPV (LW) FS engine model
TEN (DLC)	Diagnostic test mode switching	×		Same as previous MPV (LW) FS engine model
Battery	Battery voltage	×		Same as previous MPV (LW) FS engine model
Generation voltage (Generator terminal P)	Generation voltage	×		Same as previous MPV (LW) FS engine model
Immobilizer unit	Immobilizer system communication	×		Same as previous MPV (LW) FS engine model

Output Device

×:Applied —: Not applied

Item	Signal	New MPV (LW) L3	Previous MPV (LW) FS	Remark for new model
IAC valve	IAC	×		Same function as previous MPV (LW) FS engine model Idle speed is different to much vehicle characteristics.
VIS solenoid valve	VIS	×		Same function as VICS of previous MPV (LW) FS engine model Operation condition is different.
VTCS solenoid valve	VTCS	×	—	Same fanction as current MX-5 (NB) Operation condition is different.
Fuel injector	Fuel injection control	×		Same function as previous MPV (LW) FS engine model Fuel injection timing is different.
Fuel pump relay	Fuel pump control	×		Same as previous MPV (LW) FS engine model
Ignition coil	ESA control	×		Same as current 626 (GF) FS engine model
EGR valve	EGR control	×		Same as previous MPV (LW) FS engine model
Purge solenoid valve	Purge control	×		Same function as previous MPV (LW) FS engine model Add BARO correction
O2 sensor heater (Front, rear)	O2S heater control	×		Same as current 323 (BJ) FS engine model
Field coil (Generator terminal D)	Generator control	×		Same as previous MPV (LW) FS engine model
Fan control module	Electric fan control	×	—	New system adopted
A/C relay	A/C cut-off control	×		Same function as previous MPV (LW) FS engine model Operation condition is different.
Generator warning light	Information function	×		Same function as previous MPV (LW) FS engine model
Water temperature gauge	Information function	×	—	New system adopted
Drive information system display	Information function	×		Same as previous MPV (LW) FS engine model

STRUCTURAL VIEW

AME414018881W02

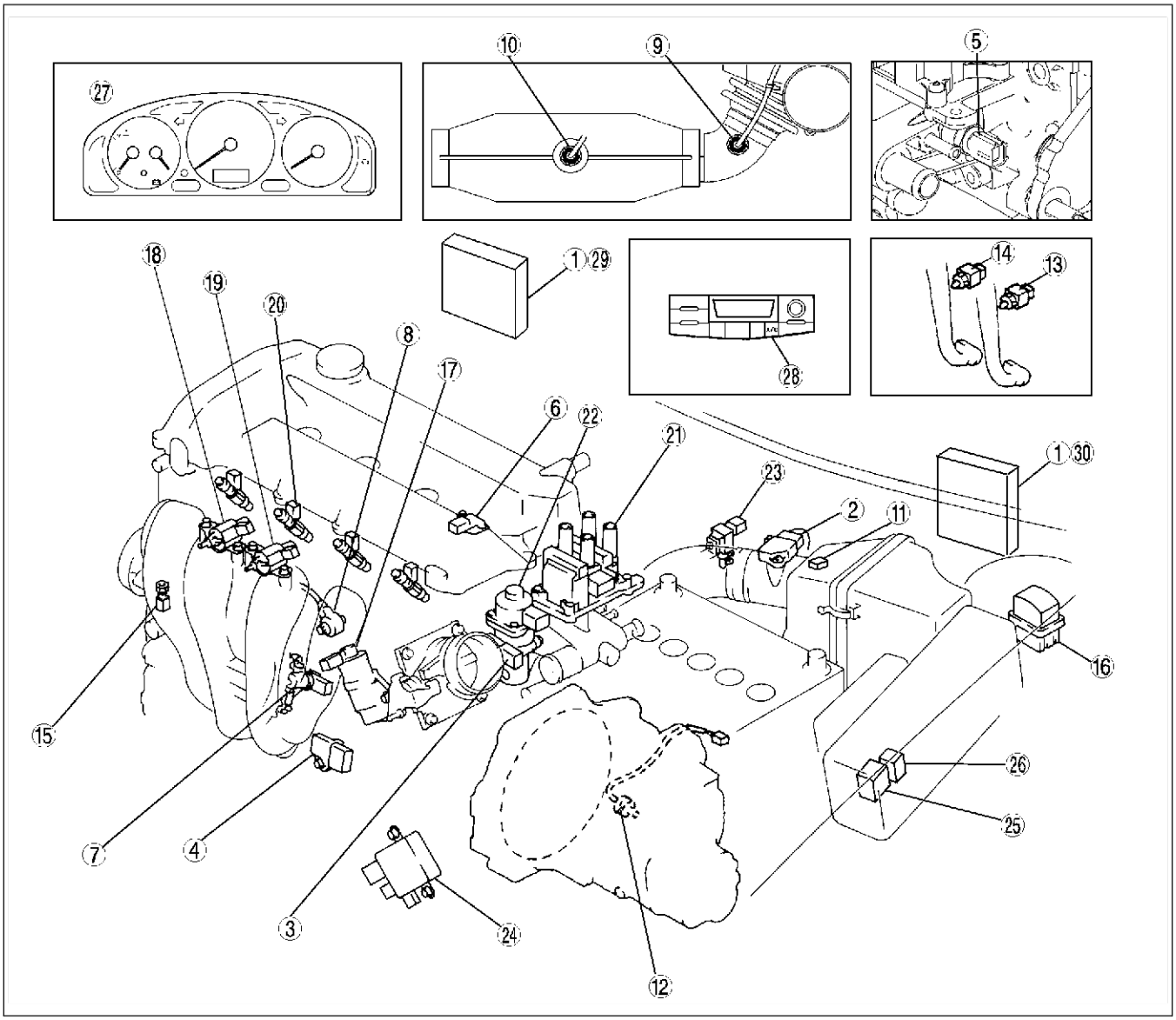

AME4140W000

1	PCM
2	MAF/IAT sensor
3	TP sensor
4	MAP sensor
5	ECT sensor
6	CMP sensor
7	CKP sensor
8	Knock sensor
9	Front HO2S sensor (integrated O2S heater)
10	Rear HO2S sensor (integrated O2S heater)
11	BARO sensor
12	Neutral switch
13	Clutch switch
14	Brake switch
15	PSP switch
16	DLC

17	IAC valve
18	VIS control solenoid valve
19	Variable tumble control solenoid valve
20	Fuel injectors
21	Ignition coil
22	EGR valve
23	Purge solenoid valve
24	Fun control module
25	Main relay
26	Fuel pump relay
27	Combination meter (Water temperature gauge, Generator warning light, Drive information system display)
28	A/C switch
29	L.H.D
30	R.H.D

End Of Sie

BLOCK DIAGRAM

AME414018881W03

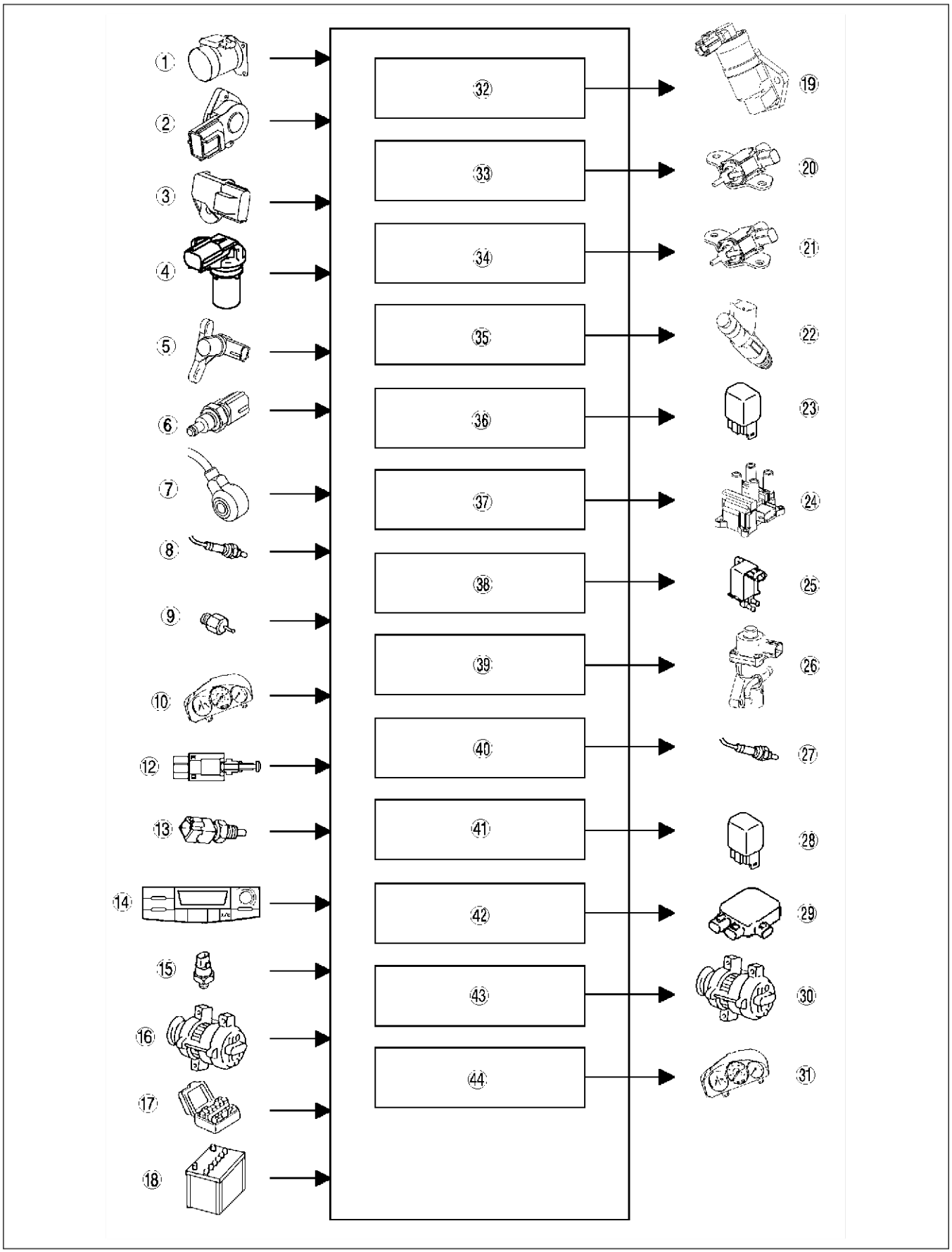

AME4140W001

1	MAF/IAT sensor
2	TP sensor
3	MAP senor
4	CMP senosr
5	CKP sensor
6	ECT sensor
7	Knock sensor
8	HO2S (Front, rear)
9	PSP switch
10	VSS
11	Neutral switch
12	Clutch switch
13	Brake switch
14	A/C switch, refrigent pressure switch (A/C operation request signal)
15	Refrigent pressure switch (A/C compressure load signal)
16	Generator
17	TEN terminal (DLC)
18	Battery
19	IAC valve
20	VIS control solenoid valve
21	Variable tumble control solenoid valve
22	Fuel injector
23	Fuel pump relay
24	Ignition coil
25	Purge solenoid valve
26	EGR valve
27	HO2S sensor heater (Front, rear)
28	A/C relay
29	Fun control module
30	Generator
31	Combination meter (Water temperature gauge, Generator warning light, Drive information system display)
32	IAC
33	VIS
34	VTCS
35	Fuel injection control
36	Fuel pump control
37	ESA
38	Purge control
39	EGR control
40	HO2S heater (Front, rear) control
41	A/C cut-off control
42	Electoric fan control
43	Generator control
44	Information function

End Of Sta

CONTROL DEVICES AND CONTROL RELATIONSHIP CHART

AME414018881W04

Engine Control System
Input devices

×: Applicable

Component	Idle air control (IAC)	VIS	VTCS	Fuel injection control	Fuel pump control	Electronic spark advance (ESA) control	Purge control	EGR control	Front HO2S heater control	Rear HO2S heater control	A/C cut-off control	Electric fan control	Generator control	ECT information function	Generator warning light control	Fuel consumption calculation function	Traction control	Immobilizer system
IAT sensor	×			×					×	×			×		×	×		
MAF sensor	×			×		×	×	×	×	×						×		
TP sensor	×		×	×		×		×	×		×	×				×		
MAP sensor	×			×												×		
ECT sensor	×		×	×		×	×	×	×	×	×	×		×		×		
CMP sensor				×												×		
CKP sensor	×	×	×	×	×	×	×	×	×	×	×		×			×		
Knock sensor						×												
Front HO2S				×			×									×		
Rear HO2S				×												×		
BARO sensor							×											
Neutral switch	×			×		×	×				×					×		
Clutch switch	×			×		×	×				×					×		
Brake switch				×												×		
PSP switch	×			×		×										×		
VSS				×			×	×					×			×		
A/C switch, refrigerant pressure switch (high, low pressure)	×			×		×					×	×				×		
Refrigerant pressure switch (middle pressure)												×						
TEN (DLC)	×					×	×					×						
Battery voltage				×		×	×		×				×			×		
Generator terminal P (Generation voltage)	×					×							×		×			
ABS/TCS HU/CM																	×	
Immobilizer unit																		×

Output devices

×: Applicable

Component	Idle air control (IAC)	VIS	VTCS	Fuel injection control	Fuel pump control	Electronic spark advance (ESA) control	Purge control	EGR control	Front HO2S heater control	Rear HO2S heater control	A/C cut-off control	Electric fan control	Generator control	ECT information function	Generator warning light control	Fuel consumption calculation function	Traction control	Immobilizer system
IAC valve	×																	
VIS control solenoid valve		×																
Variable tumble control solenoid valve			×															
Fuel injectors				×													×	×
Fuel pump relay					×													
Ignition coil						×											×	×
Purge solenoid valve							×											
EGR valve								×										
HO2S heaters									×	×								
A/C relay											×							
Fan control module												×						
Generator (terminal D: field coil)													×					
Water temperature gauge														×				
Generator warning light															×			
Drive information system display																×		
ABS/TCS HU/CM																	×	

End Of Sie

F3

CAMSHAFT POSITION (CMP) SENSOR

AME414018881W05

Outline

- For cylinder identification, the CMP sensor detects a camshaft angle of **30 degree** after the top dead center in cylinder No. 1.
- The wave form of CMP sensor output is shown in the figure.

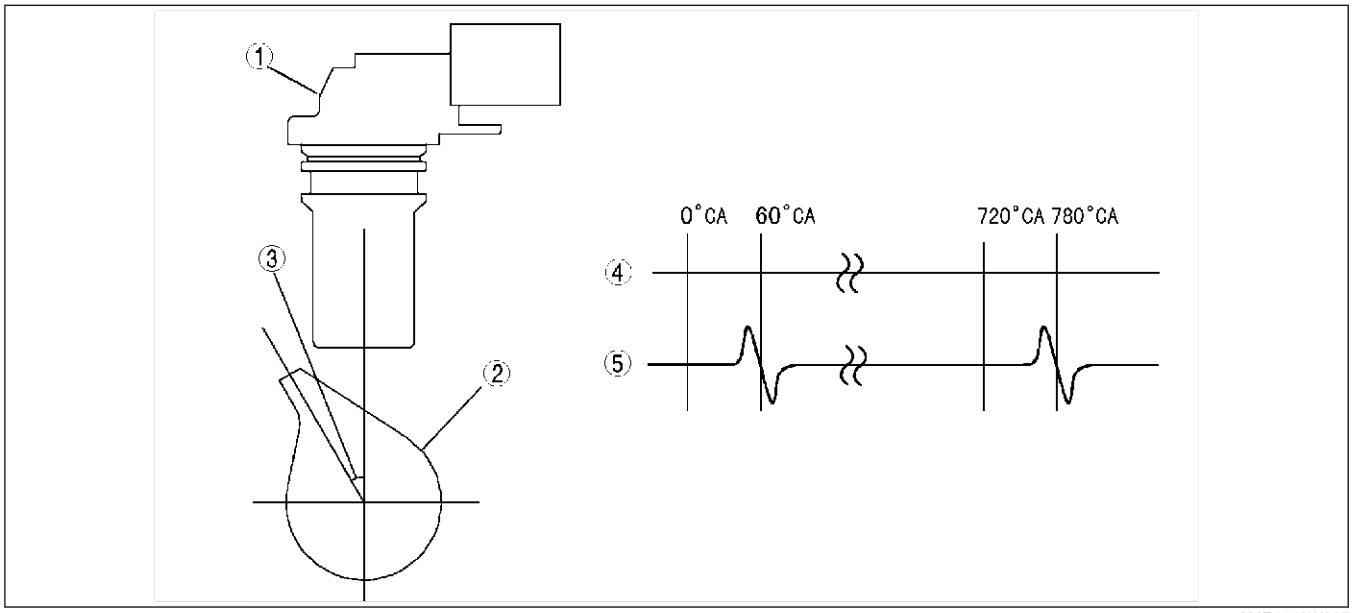

AME4140W007

1	CMP sensor
2	Camshaft for Inlet valve
3	Camshaft angle **30 degree**

4	Crankshaft angle
5	CMP sensor output wave form

End Of Sie

CRANKSHAFT POSITION (CKP) SENSOR

AME414018881W06

Outline

- For detects the crankshaft angle, the CKP sensor detects pulsation signals from pulse wheel.
- The wave form of CKP sensor output is shown in the figure.

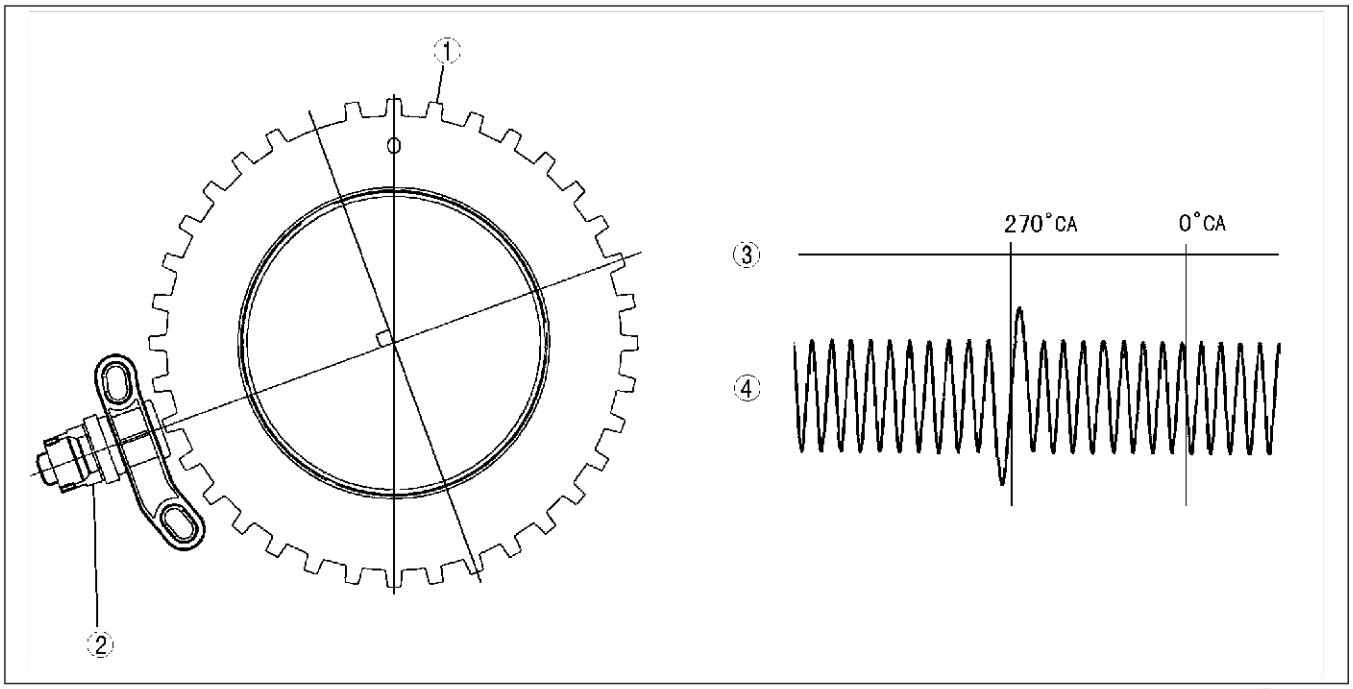

AME4140W008

1	Puls wheel
2	CKP sensor

3	Crankshaft angle
4	CKP sensor output wave form

IDLE AIR CONTROL (IAC)

AME414018881W07

Outline

- The IAC of the new MPV (LW) L3 engine model is essentially carried over from the cuurent MPV (LW) FS engine models except for followings.
  — Add the MAP factor to the feedback crrection
  — Target engine speed is different caused to much the vehicle characteristics.

Target Engine Speed

Condition	Idle speed (rpm)
No load	650
Electrical load is on.*1	650
P/S is operating.	650
A/C is operating.*2	700

*1 : Headlight is on, fan switch is above 1st, cooling fan is operationg, and rear window defroster is on.
*2 : A/C switch and fan switch are on.

End Of Sub

VARIABLE INTAKE-AIR SYSTEM (VIS)

AME414018881W08

Outline

- The VIS system of the new MPV (LW) L3 engine model is essentially carried over from the VICS of the cuurent MPV (LW) FS engine models except for operation conditions.

Operation Conditions

- The PCM energized/De-eneragized the VIS control solenoid valve at the engine speed **4,344 rpm**.

End Of Sub

VARIAVLE TUMBLE CONTROL SYSTEM (VTCS)

AME414018881W09

Outline

- The VTCS actuates the VTCS shutter valve in the intake manifold to increase the intake air flowing speed and create the tumbling air in the combustion chamber for better injected fuel atomization, thus reduces the HC and CO exhaust emissions at light load.

Operation Conditions

- The PCM turns the variable tumble control solenoid valve ON to close the VTCS shutter valve in the intake manifold when all of the following conditions are met:
  — Engine speed: **below 3,500 rpm**
  — Throttle opening angle is below as followings:
  Below 1,500 rpm: 35%
  Between 1,500 rpm and 2,500 rpm: 25—35%
  Above 2,500 rpm: 25%
  — ECT sensor and TP sensor are not malfunctioning
- The PCM turns the variable tumble control solenoid valve OFF for maintaining the startability and stability during the engine cranking and for **0.2 second** after engine started.

End Of Sub

FUEL INJECTION CONTROL

AME414018881W10

Outline

- There are two types of injection timing control: “synchronized injection” and “non-synchronized injection.”
- BARO and rear oxygen sensor feedback correction has been added.

Injection Timing

Synchronized injection

- PCM determines fuel injection timing and amount synchronized with the crank angle, and based on the following signals during the intake/exhaust stroke of each cylinder.
  — CKP, MAF, ECT, IAT

Non-synchronized injection

- PCM determines fuel injection timing and amount based on the following signals (not synchromized with the crankangle).
  — TP, MAF, ECT, IAT

Correction
BARO correction
- Purpose: to maintain the engine stability
- Conditions: at all time
- Action: lower BARO, larger correction

Rear HO2S feedback correction
- Purpose: to control air/fuel ratio close to increase the performance of the catalytic converter
- Conditions: at feedback zone
- Action: Rear HO2S output voltage

End Of Sie

A/C CUT-OFF CONTROL

AME414018881W11

Outline
- The A/C cut-off control of the new MPV (LW) L3 engine model is essentially carried over from the current MPV (LW) FS engine model except for operation condition.

Operation Conditions
- While A/C is operating, the PCM cuts off the power supply to the A/C relay as shown below.

A/C cut-off condition	A/C cut-off time	Purpose
During cranking	For approx 4.0 s	Startability improvement
Throttle valve is opend more than 50%	For approx 5.0 s	Acceleration performance improvement
ECT is above 113 °C {235 °F}	Alternates between 10 seconds on and off until ECT falls to 107 °C {225 °F}	Engine reliability improvement
ECT is above 118 °C {244 °F}	Until engine ECT falls below 113 °C {235 °F}	

End Of Sie

ELECTRIC FAN CONTROL

AME414018881W12

Outline
- The PCM controls the fan control module via duty value according to vehicle driving conditions for improved engine reliability and idle stability.

Block Diagram

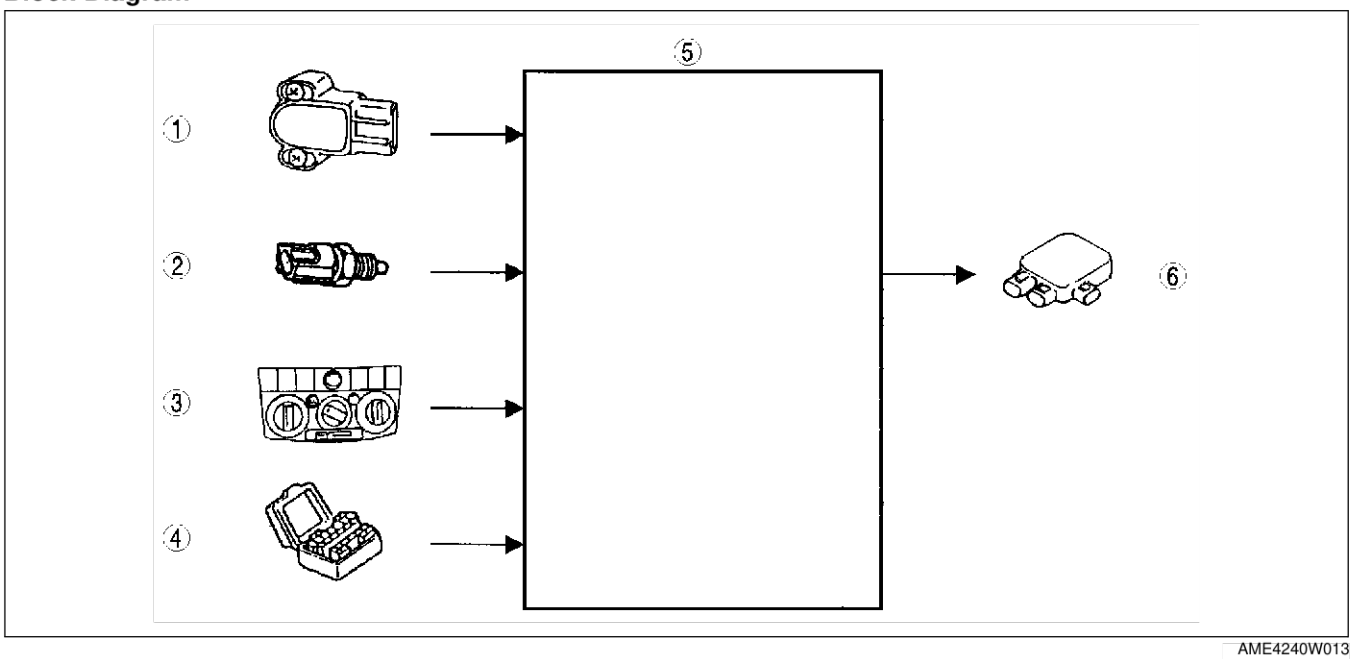

AME4240W013

1	TP sensor
2	ECT sensor
3	A/C switch

4	DLC terminal TEN
5	PCM
6	Fan control module

Operation

A/C is off condition

- When the engine coolant temperature is below Tw1, the duty ratio outputted from the PCM is **0%**, causing the duty ratio outputted from the fan control module to also be **0%** and the cooling fan is stopped.
- When the engine coolant temperature goes above Tw1, the duty ratio varies within the LO and HI (A/C off) positions in relation to the engine coolant temperature and the cooling fan operates accordingly.
- When the engine coolant temperature reaches approx. Tw2, the duty ratio is maintained in the HI (A/C is off) position until the engine coolant temperature goes above approx. Tw4.
- When the engine coolant temperature goes above Tw4, the duty ratio is MAX and the cooling fan operates at maximum speed.

A/C is on condition

- When the A/C switch is on, the duty ratio is maintained in the HI (A/C is on) position until the engine coolant temperature goes above approx. Tw3.
- When the engine coolant temperature goes above Tw3, the duty ratio varies within the HI (A/C is on) and HI (A/C is off) positions in relation to the engine coolant temperature.
- When the A/C switch and Refrigerant pressure switch (middle pressure) are on, regardless of the engine coolant temperature, the duty ratio outputted from the PCM is MAX, and the cooling fan operates at maximum speed.

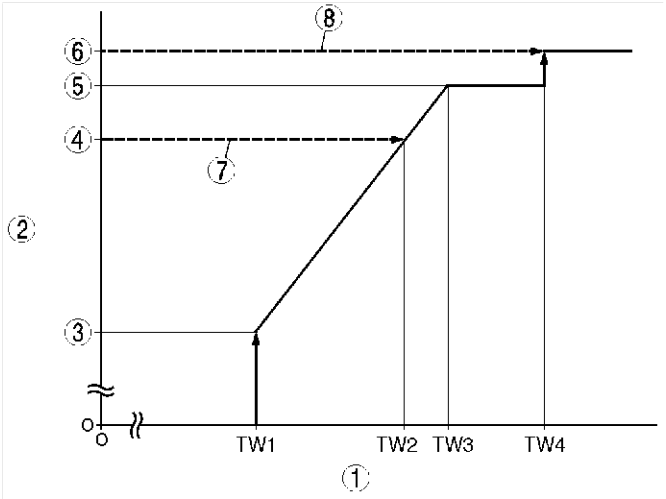

AME4240W014

1	Engine coolant temperature
2	PCM output duty signal
3	Low
4	High (A/C is on)
5	High (A/C is off)

6	MAX
7	A/C is on (Refrigerant pressure switch (middle pressure) is OFF)
8	A/C is on (Refrigerant pressure switch (middle pressure) is ON)

Battery Voltage Correction

- To prevent variation of cooling fan speed due to battery voltage fluctuation, the PCM adjusts the duty ratio and corrects the battery voltage to maintain the cooling fan at a constant speed and stabilize cooling efficiency.

End Of Sta

ON-BOARD DIAGNOSTIC

OUTLINE

AME417018881W01

- The construction and operation of the on-board diagnostic system is essentially carried over from that of the previous MPV (LW) EOBD models, except for the following. (See MPV Workshop Manual supplement 1700-1*-00H.)
  - — DTCs, PID monitoring items, and simulation items have been changed to comply with EOBD regulations. For the detailed information about the regulations, refer to the “EOBD Training Manual (3345-1E-00B).”
  - — A KOEO/KOER self-test function, which readily confirms the present malfunction or a successful repair, has been adopted.
  - — The pending code storage process has been changed as follows.
    1 drive cycle type
    - With the previous MPV (LW) GY/FS engine model, the pending code is not available but with the new model the pending code is stored in the PCM during the drive cycle

    2 drive cycle type
    - With the previous MPV (LW) GY/FS engine model, pending codes are deleted when a DTC is stored. With the new MPV (LW), however, even if a DTC is stored, the PCM does not delete the pending code until a normal (malfunction repaired) condition judgement is made.
  - — The conditions by which the MIL for the 2DC type illuminates have been changed as follows.
    New model
    - The PCM determines that there is a malfunction in the first drive cycle when a DTC that has been stored in the PCM

    Previous model
    - The PCM determines that there is a malfunction in the second drive cycle

End Of Se

CONTROL DEVICES AND MONITORING SYSTEM RELATIONSHIP CHART

AME417018881W02

Monitoring System

×: Applicable

Component	Monitor item				
	Catalyst	Misfire	Fuel system	Oxygen sensor	Oxygen sensor heater
Input					
CKP sensor	×	×	×	×	×
CMP sensor	×	×	×	×	×
VSS		×	×	×	
MAF sensor	×	×	×	×	×
ECT sensor	×	×	×	×	×
IAT sensor	×	×	×	×	
TP sensor	×	×	×	×	
Rear HO2S	×			×	×
Front HO2S	×		×	×	×
Output					
DLC-2	×	×	×	×	×
MIL	×	×	×	×	×
Purge solenoid valve			×	×	
Fuel injectors			×		

End Of Se

DIAGNOSTIC TEST MODE

AME417018881W03

- To comply with OBD regulations, the following diagnostic test modes are supported.

Diagnostic test mode	Item
Mode 01	Sending diagnostic data (PID data monitor/On-board system readiness test)
Mode 02	Sending freeze frame data
Mode 03	Sending emission-related malfunction code (Diagnostic trouble code: DTC)
Mode 04	Clearing/resetting emission-related malfunction information
Mode 05	Sending oxygen sensor monitor test results
Mode 06	Sending intermittent monitoring system test results (Diagnostic monitoring test result: DMTR)
Mode 07	Sending continuous monitoring system test results (pending code)

- The diagnostic test modes are shown below.

Sending Diagnostic Data (Mode 01)
PID data monitor
- The PID monitoring items are shown in the table.

PID data monitor table

Full names	Condition/unit	
Diagnostic trouble code counter	–	
Malfunction indicator	ON/OFF	
Fuel system loop status	Refer to table below.	
Engine load calculated value	%	
Engine coolant temperature	°C	°F
Short fuel trim	%	
Long fuel trim	%	
Intake manifold absolute pressure	%	kPa
Engine speed	rpm	
Vehicle speed	km/h	mph
Spark advance	BTDC	
Intake air temperature	°C	°F
Mass air flow	g/s	
Throttle position	%	
Oxygen sensor location	–	
Front heated oxygen sensor	V	%
Rear heated oxygen sensor	V	%
OBD requirement to which vehicle is designed	–	
Distance travelled while MI is activated	km	miles

Meaning of FUEL SYS1

Display	Meaning
-NA-	Not applicable
OPEN	Feedback stops: Engine coolant temperature is lower than the determined feedback zone.
CLOSE	Feedback operating: HO2S being used for feedback is okay.
OP DRV	Feedback stops: Open loop due to driving condition.
OP SYS	Feedback stops: Open loop due to detected system fault.
CL O2S	Feedback operating: Malfunction occurred in HO2S (rear) system.

On-board system readiness test
- The items supported by the on-board system readiness test are shown below.
  Continuous monitoring system
  — Misfire monitoring
  — Fuel system monitoring
  — Comprehensive component monitoring (CCM)
  Intermittent monitoring system
  — Catalyst monitoring
  — O2S monitoring
  — O2S heater monitoring

Sending Freeze Frame Data (FFD) (Mode 02)
- The FFDs are shown in the table.

FFD monitor table

Full names	Condition/unit	
DTC that caused required FFD storage	–	
Fuel system loop status	OPEN: NON-F/B, CLOSE: F/B	
Engine load calculated value	%	
Engine coolant temperature	°C	°F
Short fuel trim	%	
Long fuel trim	%	
Intake manifold absolute pressure	%	kPa
Engine speed	rpm	

Full names	Condition/unit	
Vehicle speed	km/h	mph
Spark advance	BTDC	
Intake air temperature	°C	°F
Mass air flow	g/s	
Throttle position	%	

Sending Emission-related Malfunction code (DTC) (Mode 03)

- The DTCs are shown in the table.

DTC table

×: Applicable
—: Not applicable

DTC No.	Condition	MIL	DC	Monitor item	Memory function
P0031	Front HO2S heater circuit low input	ON	2	O_2 sensor heater	×
P0032	Front HO2S heater circuit high input	ON	2	O_2 sensor heater	×
P0037	Rear HO2S heater circuit low input	ON	2	O_2 sensor heater	×
P0038	Rear HO2S heater circuit high input	ON	2	O_2 sensor heater	×
P0101	MAF sensor inconsistent with TP sensor	ON	2	CCM	×
P0102	MAF circuit low input	ON	1	CCM	×
P0103	MAF circuit high input	ON	1	CCM	×
P0107	MAP sensor circuit low input	ON	1	CCM	×
P0108	MAP sensor circuit high input	ON	1	CCM	×
P0111	IAT circuit performance problem	ON	2	CCM	×
P0112	IAT circuit low input	ON	1	CCM	×
P0113	IAT circuit high input	ON	1	CCM	×
P0117	ECT circuit low input	ON	1	CCM	×
P0118	ECT circuit high input	ON	1	CCM	×
P0121	TP stuck closed	ON	2	CCM	×
P0122	TP circuit low input	ON	1	CCM	×
P0123	TP circuit high input	ON	1	CCM	×
P0125	Excessive time to enter closed loop fuel control	ON	2	CCM	×
P0131	Front HO2S no inversion (stuck low)	ON	2	CCM	×
P0132	Front HO2S no inversion (stuck high)	ON	2	CCM	×
P0133	Front HO2S circuit malfunction	ON	2	O_2 sensor	×
P0134	Front HO2S circuit no activity detected	ON	2	CCM	×
P0138	Rear HO2S circuit high input	ON	2	CCM	×
P0140	Rear HO2S circuit no activity detected	ON	2	CCM	×
P0171	Fuel trim system too lean	ON	2	Fuel	×
P0172	Fuel trim system too rich	ON	2	Fuel	×
P0300	Random misfire detected	Flash / ON	1 or 2	Misfire	×
P0301	Cylinder No.1 misfire detected	Flash / ON	1 or 2	Misfire	×
P0302	Cylinder No.2 misfire detected	Flash / ON	1 or 2	Misfire	×
P0303	Cylinder No.3 misfire detected	Flash / ON	1 or 2	Misfire	×
P0304	Cylinder No.4 misfire detected	Flash / ON	1 or 2	Misfire	×
P0327	Knock sensor circuit low input	ON	1	CCM	×
P0328	Knock sensor circuit high input	ON	1	CCM	×
P0335	CKP sensor circuit malfunction	ON	1	CCM	×
P0340	CMP sensor circuit malfunction	ON	1	CCM	×
P0403	EGR valve motor coils open or short	ON	2	CCM	×
P0420	Catalyst system efficiency below threshold	ON	2	Catalyst	×
P0443	Evaporative emission control system purge control valve circuit malfunction	ON	2	CCM	×
P0480	Fan control module circuit malfunction	OFF	2	CCM	×
P0500	Vehicle speed sensor (VSS) circuit malfunction	ON	2	CCM	×
P0505	Idle control system malfunction	OFF	—	Other	—

DTC No.	Condition	MIL	DC	Monitor item	Memory function
P0506	Idle control system RPM lower than expected	ON	2	CCM	×
P0507	Idle control system RPM higher than expected	ON	2	CCM	×
P0511	Idle control system circuit malfunction	ON	1	CCM	×
P0550	PSP switch circuit malfunction	ON	2	CCM	×
P0661	VIS circuit low input	OFF	2	Other	×
P0662	VIS circuit high input	OFF	2	Other	×
P0703	Brake switch input malfunction	ON	2	CCM	×
P0704	Clutch switch input malfunction	ON	2	CCM	×
P0850	Neutral switch input malfunction	ON	2	CCM	×
P1562	PCM +BB voltage low	ON	1	CCM	×
P1602	Immobilizer unit-PCM communication error	OFF	1	Other	×
P1603	Key ID numbers are not registered in PCM	OFF	1	Other	×
P1604	Code word is not registered in PCM	OFF	1	Other	×
P1621	Code word does not match after engine cranking	OFF	1	Other	×
P1622	Key ID number does not match	OFF	1	Other	×
P1623	Code word or key ID number read/write error in PCM	OFF	1	Other	×
P1624	Immobilizer system communication counter=0	OFF	1	Other	×
P2006	VTCS shutter valve stuck closed	ON	2	CCM	×
P2009	Variable tumble control solenoid circuit low input	ON	2	CCM	×
P2010	Variable tumble control solenoid circuit high input	ON	2	CCM	×
P2228	BARO sensor circuit low input	ON	1	CCM	×
P2229	BARO sensor circuit high input	ON	1	CCM	×
P2502	Generator output voltage signal no electricity	OFF	1	Other	—
P2503	Battery overcharge	OFF	1	Other	—
P2504	Generator terminal B circuit open	OFF	1	Other	—

F3

Sending Intermittent Monitoring System Test Results (Mode 06)

- The items supported by the sending intermittent monitoring system are shown in the table.

TEST ID	Description	Related system
10:01:0A	Rich to lean sensor threshold voltage	HO2S
10:02:0A	Lean to rich sensor threshold voltage	
10:03:0A	Low sensor voltage for switching time calculation	
10:04:0A	High sensor voltage for switching time calculation	
10:05:10	Rich to lean sensor switching time	
10:06:10	Lean to rich sensor switching time	
10:0A:10	Sensor period	
10:80:20	Front and rear HO2S switching time ratio	TWC

Sending Continuous Monitoring System Test Results (pending code) (Mode 07)

- These appear when a problem is detected in a monitored system.

1 Drive Cycle Type

- If any problems are detected in the first drive cycle, pending codes will be stored in the PCM memory, as well as DTCs.
- After pending codes are stored, if the PCM judges that the system is normal (malfunction repaired) in any future drive cycle, the PCM deletes the pending codes.

2 Drive Cycle Type

- The code for a failed system is stored in the PCM memory in the first drive cycle. If the problem is not found in the second drive cycle, the PCM judges that the system returned to normal or the problem was mistakenly detected, and deletes the pending code. If the problem is found in the second drive cycle too, the PCM judges that the system has failed, and stores the pending codes, and the DTCs.
- After pending codes are stored, if the PCM judges that the system is normal (malfunction repaired) in any future drive cycle, the PCM deletes the pending codes.

End Of Sta

DTC

AME417018881W04

- Detection logics or conditions are as shown below.

Oxygen Sensor Heater
Front HO2S heater circuit low input(P0031)
- The PCM monitors the front HO2S heater control signal at the PCM terminal 4A. If the PCM turns the front HO2S heater off but the front HO2S heater circuit has low voltage, the PCM determines that the front HO2S heater circuit has a malfunction.

Front HO2S heater circuit high input(P0032)
- The PCM monitors the front HO2S heater control signal at the PCM terminal 4A. If the PCM turns the front HO2S heater on but the front HO2S heater circuit has high voltage, the PCM determines that the front HO2S heater circuit has a malfunction.

Rear HO2S heater circuit low (P0037)
- The PCM monitors the rear HO2S heater control signal at the PCM terminal 4D. If the PCM turns the rear HO2S heater off but the rear HO2S heater circuit has low voltage, the PCM determines that the rear HO2S heater circuit has a malfunction.

Rear HO2S heater circuit high (P0038)
- The PCM monitors the rear HO2S heater control signal at the PCM terminal 4D. If the PCM turns the rear HO2S heater on but the rear HO2S heater circuit has high voltage, the PCM determines that the rear HO2S heater circuit has a malfunction.

MAF Sensor
MAF sensor inconsistent with TP sensor (P0101)
- The PCM compares the actual input signal from the MAF sensor with the expected input signal from the MAF sensor (calculated using the input voltage from the throttle position sensor or engine speed).
  - — If mass intake air flow amount is **below 4.8 g/sec. {0.63 lb/min.}** for **5 s** and throttle opening angle is **above 50%** with engine running, the PCM determines that the detected mass intake air flow amount is too low.
  - — If mass intake air flow amount is **above 66.5 g/sec. {8.8 lb/min.}** for **5 s** and engine speed is **below 2,000 rpm** with the engine running, the PCM determines that the detected mass intake air flow amount is too high.

MAF sensor circuit high input (P0102)
- The PCM monitors input voltage from the MAF sensor when the engine is running. If the input voltage at PCM terminal 1P is **below 0.21 V**, the PCM determines that the MAF circuit has a malfunction.

MAF sensor circuit high input (P0103)
- The PCM monitors input voltage from the MAF sensor when the engine is running. If the input voltage at PCM terminal 1P is **above 4.9 V**, the PCM determines that the MAF circuit has a malfunction.

MAP sensor
MAP sensor circuit low input (P0107)
- The PCM monitors input voltage from the MAP sensor when intake air temperature is **above 10 °C {50 °F}**. If input voltage at PCM terminal 1J is **below 0.01V**, the PCM determines that the MAP sensor circuit has a malfunction.

MAP sensor circuit high input (P0108)
- The PCM monitors input voltage from the MAP sensor when the intake air temperature is **above 10 °C {50 °F}**. If input voltage at PCM terminal 1J is **above 4.9 V**, the PCM determines that the MAP sensor circuit has a malfunction.

Intake Air Temperature (IAT) Sensor
IAT sensor circuit performance problem (P0111)
- If the intake air temperature is **40 °C {104 °F}** higher than the engine coolant temperature with the ignition key at ON, the PCM determines that there is an IAT sensor performance problem.

IAT sensor circuit low input (P0112)
- The PCM monitors input voltage from the IAT sensor. If input voltage at PCM terminal 2E is **below 0.2 V**, the PCM determines that the IAT sensor circuit has a malfunction.

IAT sensor circuit high input (P0113)
- The PCM monitors input voltage from the IAT sensor. If input voltage at PCM terminal 2E is **above 4.9 V**, the PCM determines that the IAT sensor circuit has a malfunction.

Engine Coolant Temperature (ECT) Sensor
ECT circuit low input (P0117)
- The PCM monitors the ECT sensor signal at PCM terminal 1M. If the PCM detects ECT sensor voltage **below 0.2 V**, the PCM determines that the ECT sensor circuit has a malfunction.

ECT circuit high input (P0118)
- The PCM monitors the ECT sensor signal at PCM terminal 1M. If the PCM detects ECT sensor voltage **above 4.5 V**, the PCM determines that the ECT sensor circuit has a malfunction.

Excessive time to enter closed loop fuel control (P0125)
- The PCM monitors the ECT sensor signal at PCM terminal 1M after the engine is started when cold. If the engine coolant temperature does not reach the expected temperature within the specified period, the PCM determines that it has taken an excessive amount of time for the engine coolant temperature to reach the temperature necessary to start closed-loop fuel control.

Throttle Position (TP) Sensor
Throttle position stuck closed (lower than expected)/open (higher than expected) (P0121)
- If the PCM detects that the throttle valve opening angle is **below 12.5%** for **5 s** after the following conditions are met, the PCM determines that the TP is stuck closed:
  - — Engine coolant temperature **above 80 °C {158 °F}**
  - — MAF sensor signal **above 58.3 g/s {7.7 lb/minutes}**
- If the PCM detects that the throttle valve opening angle is **above 50%** for **5 seconds** after the following conditions are met, the PCM determines that the TP is stuck open:
  - — Engine speed **above 500 rpm**
  - — MAF sensor signal **below 4.8 g/s {0.63 lb/min.}**

TP circuit low input (P0122)
- If the PCM detects TP sensor voltage at PCM terminal 2A is **below 0.1 V** after ignition key is turned to ON, the PCM determines that the TP circuit has a malfunction.

TP circuit high input (P0123)
- If the PCM detects TP sensor voltage at PCM terminal 2A is **above 4.9 V** after ignition key is turned to ON, the PCM determines that the TP circuit has a malfunction.

Front Heated Oxygen Sensor (HO2S)
Front HO2S stuck low (P0131)
- The PCM monitors input voltage from the front HO2S when the following conditions are met. If input voltage from the sensor remains **below 0.45 V** for **56 s**, the PCM determines that there is no front HO2S inversion.
  - — Engine speed is **above 1,500 rpm**.
  - — Engine coolant temperature is **above 80 °C {176°F}**.

Front HO2S stuck high (P0132)
- The PCM monitors input voltage from the front HO2S when the following conditions are met. If input voltage from the sensor remains **above 0.45 V** for **56 s**, the PCM determines that there is no front HO2S inversion.
  - — Engine speed is **above 1,500 rpm**.
  - — Engine coolant temperature is **above 80 °C {178 °F}**.

Front HO2S circuit malfunction (P0133)
- The PCM monitors the inversion cycle period, lean-to-rich response time and rich-to-lean response time of the sensor. The PCM calculates the average of the inversion cycle period-specified inversion cycles, average response time from lean-to-rich, and from rich-to-lean when the following conditions are met. If any exceeds threshold, the PCM determines that the circuit has a malfunction.
  - — Drive mode 3
  - — Following conditions are met:
    - Calculation load **26.6—57.8%** (depends on engine speed).
    - Engine speed **1,500—2,500 rpm**
    - Vehicle speed is above **3.76 km/h**
    - Engine coolant temperature is **above -10 °C {14 °F}**
    - Front HO2S signal inversion cycle is **above 10 cycles**

Front HO2S circuit no activity detected (P0134)

- The PCM monitors input voltage from the front HO2S when the following conditions are met. If input voltage from the sensor does not **exceed 0.55 V** for a period of **84 s**, the PCM determines that sensor circuit is not activated.
  - — Engine speed is **above 1,500 rpm**.
  - — Engine coolant temperature is **above 80 °C {176 °F}**.

Rear Heated Oxygen Sensor (HO2S)
Rear HO2S circuit high input (P0138)

- The PCM monitors input voltage from the rear HO2S. If input voltage from the rear HO2S sensor is **above 0.45 V** for **7 s** during deceleration fuel cut, the PCM determines that the circuit input is high.

Rear HO2S circuit no activity detected (P0140)

- The PCM monitors input voltage from the rear HO2S when the following conditions are met. If input voltage from the sensor does not **exceed 0.55 V** for a period of **30 s**, the PCM determines that sensor circuit is not activated.
  - — Engine speed is **above 1,500 rpm**.
  - — Engine coolant temperature is **above 80 °C {176 °F}**.

Fuel System
Fuel trim system too lean (P0171)

- The PCM monitors short term fuel trim (SHRTFT) and long term fuel trim (LONGFT) values during closed loop fuel control. If fuel trim exceeds the preprogrammed criteria, the PCM determines that the fuel system is too lean.

Fuel trim system too rich (P0172)

- The PCM monitors short fuel trim (SHRTFT) and long fuel trim (LONGFT) values during closed loop fuel control. If fuel trim exceeds the preprogrammed criteria, the PCM determines that the fuel system is too rich.

Misfire Monitor
Random misfire detection (P0300), Cylinder misfire detection (P0301, P0302, P0303, P0304)

- The PCM monitors the CKP sensor input signal interval time. The PCM calculates the change in the interval time for each cylinder. If the change in the interval time exceeds the preprogrammed criteria, the PCM detects a misfire in the corresponding cylinder. While the engine is running, the PCM counts the number of misfires that occurrs at **200 crankshaft revolutions** and **1,000 crankshaft revolutions** and calculates the misfire ratio for each crankshaft revolution. If the ratio exceeds the preprogrammed criteria, the PCM determines that a misfire, which can damage the catalytic converter or affect emission performance, has occurred.

Knock Sensor
Knock sensor circuit low input (P0327)

- The PCM monitors the input signal from the knock sensor when the engine is running. If input voltage between PCM terminals 2P and 2S is excessively low, the PCM determines that the knock sensor circuit has a malfunction.

Knock sensor circuit high input (P0328)

- The PCM monitors the input signal from the knock sensor when the engine is running. If input voltage between PCM terminals 2P and 2S is excessively high, the PCM determines that the knock sensor circuit has a malfunction.

Crankshaft Position (CKP) Sensor
CKP sensor circuit malfunction (P0335)

- If the PCM does not receive input voltage from the CKP sensor for **4.2 s** while MAF is **1.95 g/s {0.25 lb/min.} or above**, the PCM determines that the CKP sensor circuit has a malfunction.

Camshaft Position (CMP) Sensor
CMP sensor circuit malfunction (P0340)

- The PCM monitors input voltage from the CMP sensor when the engine is running. If the PCM does not receive input voltage from the CMP sensor while the PCM receives an input signal from the CKP sensor, the PCM determines that the CMP circuit has a malfunction.

EGR valve
EGR valve (stepper motor) circuit malfunction(P0340)

- The PCM monitors input voltage from the EGR valve. If voltage at PCM terminals 4E, 4H, 4K, and /or 4N remains low or high, the PCM determines that the EGR valve circuit has a malfunction.

Catalyst System
Catalyst system efficiency below threshold (P0420)
- The PCM compares the number of front HO2S and rear HO2S inversions for a predetermined time. The PCM monitors the number of inversions the rear side performs while the front side inverts for a specified number of times when the following monitoring conditions are met. The PCM detects the inversion ratio. If the inversion ratio is below threshold, the PCM determines that the catalyst system has deteriorated.
  — Engine speed **1,500—3,000 rpm**
  — Calculated load **15—48%**(*1)
  *1: Maximum calculated load value varies depending on engine speed

Purge Solenoid Valve
Evaporative emission control system purge control valve circuit malfunction (P0443)
- The PCM monitors input voltage from the purge solenoid valve. If voltage at PCM terminal 4U remains low or high, the PCM determines that the purge solenoid valve circuit has a malfunction.

Fan Control System
Fan control circuit malfunction (P0480)
- The PCM monitors input voltage from the fan control module. If voltage at PCM terminal 1U remains low or high, the PCM determines that the fan control circuit has a malfunction.

Vehicle Speed Sensor (VSS)
VSS circuit malfunction (P0500)
- Vehicle speed signal is not inputted after the following conditions are met:
  — Gear is in other than neutral position
  — Load is above **40%**
  — Engine speed is **2,000 rpm or above**

Idle Air Control (IAC) valve
IAC system malfunction (P0505)
- The PCM monitors idle speed. If idle speed is **1,800 rpm or below** for **3 s** during KOER self-test, the PCM determines that the IAC system has a malfunction.

IAC system RPM lower than expected (P0506)
- Actual idle speed is lower than expected by **100 rpm** for **14 s**, when the brake pedal is depressed (brake switch is on) and the steering wheel is held straight ahead (power steering pressure switch is off).

IAC system RPM higher than expected (P0507)
- Actual idle speed is higher than expected by **200 rpm** for **14 s**, when the brake pedal is depressed (brake switch is on) and the steering wheel is held straight ahead (power steering pressure switch is off).

IAC valve circuit malfunction (P0511)
- If the PCM detects that PCM terminal 4G voltage is above or below threshold when the IAC control duty target is **within18—70%**, the PCM determines that the IAC valve circuit has a malfunction.

Power Steering Pressure (PSP) switch
PSP switch circuit malfunction (P0550)
- The PCM monitors the PSP switch signal at PCM terminal 1Z. If input voltage is low (switch stays on) for **1 minute** when VSS is **above 60.1 km/h {37.3 mph}** and ECT is **above 60 °C {140 °F}**, the PCM determines that the PSP switch circuit has a malfunction.

Variable Intake-Air System (VIS) solenoid valve
VIS control solenoid valve circuit low input (P0661)
- The PCM monitors the VIS control solenoid valve control signal at the PCM terminal 4R. If the PCM turns the VIS control solenoid valve off but voltage at PCM terminal 4R still remains low, the PCM determines that the VIS control solenoid valve circuit has a malfunction.

VIS control solenoid valve circuit high input (P0662)
- The PCM monitors the VIS control solenoid valve control signal at PCM terminal 4R. If the PCM turns the VIS control solenoid valve on but voltage at PCM terminal 4R still remains high, the PCM determines that the VIS control solenoid valve circuit has a malfunction.

Brake switch
Brake switch input malfunction (P0703)
- The PCM monitors changes in input voltage from the brake switch. If the PCM does not detect that PCM terminal 1K voltage changes while alternately accelerating and decelerating **10 times**.

Clutch switch
Clutch switch input malfunction (P0704)
- The PCM monitors changes in input voltage from the clutch switch. If the PCM does not detect that PCM terminal 1R voltage changes with the vehicle speed **above 30 km/h {19 mph}** and after stopping the vehicle **10 times** repeatedly, the PCM determines that the clutch switch circuit has a malfunction.

Neutral switch
Neutral switch input malfunction (P0850)
- The PCM monitors changes in input voltage from the neutral switch. If the PCM does not detect that PCM terminal 1W voltage changes with the vehicle speed **above 30 km/h {19 mph}** and after depressing and releasing the clutch pedal **10 times** repeatedly, the PCM determines that the neutral switch circuit has a malfunction.

PCM
PCM +BB (back-up battery) voltage low (P1562)
- The PCM monitors back up battery positive voltage at PCM terminal 2Z. If the PCM detects a battery positive terminal voltage **below 2.5V** for **2 s**, the PCM determines that the back up voltage circuit has a malfunction.

Immobilizer
Immobilizer unit–PCM communication error (P1602)
- Command transmission from the PCM to the immobilizer unit exceeds limit.
- No response from immobilizer unit.

Code word is not registered in PCM (P1603)
- Code word is not registered in the PCM.

Key ID numbers are not registered in PCM (P1604)
- Key ID number are not registered in the PCM.

Code words do not match after engine cranking (P1621)
- Code words stored in the PCM and immobilizer unit do not match.

Key ID number does not match (P1622)
- ID numbers stored in immobilizer unit (IU) and the PCM do not match. This DTC is indicated only after the immobilizer unit is replaced and the system is reprogrammed.

Code word or key ID number read/write error in PCM (P1623)
- The PCM internal EEPROM is damaged.

Immobilizer system communication counter=0 (P1624)
- The PCM detected an immobilizer system communication malfunction more than three times.

Variable Tumble Control System (VTCS)
VTCS shutter valve stuck closed (P2006)
- The PCM monitors the mass air amount. If the actual air flow amount is below the estimated air flow amount when the following monitoring conditions are met, the PCM determines that the VTCS shutter valve is stuck closed.
  - — Engine speed is **above 3,750 rpm**
  - — Engine coolant temperature is **above 70 °C {158 °F}**
  - — Throttle valve opening angle is above threshold
  - — Throttle valve opening angle is above threshold*1
    *1: Maximum calculated load value varies depending on engine speed

Variable tumble control solenoid valve circuit low input (P2009)
- The PCM monitors the variable tumble control solenoid valve control signal at PCM terminal 4T. If the PCM turns the variable tumble control solenoid valve off but voltage at PCM terminal 4T still remains low, the PCM determines that the variable tumble control solenoid valve circuit has a malfunction.

Variable tumble control solenoid valve circuit high input (P2010)
- The PCM monitors the variable tumble control solenoid valve control signal at PCM terminal 4T. If the PCM turns the variable tumble control solenoid valve on but voltage at PCM terminal 4T still remains high, the PCM determines that the variable tumble control solenoid valve circuit has a malfunction.

BARO sensor
BARO sensor circuit low input (P2228)
- The PCM monitors input voltage from the BARO sensor. If input voltage at PCM terminal 1G is **below 0.36 V**, the PCM determines that the BARO sensor circuit has a malfunction.

BARO sensor circuit high input (P2229)
- The PCM monitors input voltage from the BARO sensor. If input voltage at PCM terminal 1G is **above 4.92 V**, the PCM determines that the BARO sensor circuit has a malfunction.

Generator
Generator terminal B circuit open (P2502)
- The PCM judges generator output voltage **above 17 V** and **B+** is **below 11 V**.

Generator output voltage signal no electricity (P2503)
- The PCM needs **more than 20 A** from the generator, and judges generator output voltage to be **below 8.5 V** while engine is running.

Battery overcharge (P2504)
- The PCM judges generator output voltage is **above 18.5 V** or **B+** is **above 16 V** while engine is running.

End Of Sta

PID/DATA MONITOR AND RECORD

AME417018881W05

F3

- The PID/DATA monitoring items for the fuel and emission control systems are as shown in the table below.

Monitor item table

—: Not applicable

PID item	Definition	Unit/Condition	PCM terminal
ACCS	A/C relay	ON/OFF	4O
ACSW	A/C on demand circuit, including refrigerant pressure switch, A/C amplifier, A/C switch and fan switch	ON/OFF	1AC
ALTF	Generator field coil control duty valve in PCM	%	1AD
ALTT V	Generator output voltage	V	1AA
ARPMDES	Target engine speed	rpm	—
AST	After start timer	Time	—
BARO	Barometric pressure	Pressure	1G
BOO	Brake switch	ON/OFF	1K
CHRGLP	Generator warning light control signal in PCM	ON/OFF	4C
COLP	Refrigerant pressure switch (middle pressure)	ON/OFF	1Q
CPP	Clutch pedal position switch	ON/OFF	1R
CPP/PNP	Clutch pedal position switch/neutral switch circuit	ON/OFF	1W
DTCCNT	DTC Count (includes those needling no action)	—	—
ECT	Engine coolant temperature	°C or °F	1M
	Engine coolant temperature voltage	V	1M
EVAPCP	Purge solenoid valve duty value in PCM	%	4U
FAN_DUTY	Fan control signal in PCM	%	1U
FDPDTC*1	Pending code	—	—
FP	Fuel pump relay control signal in PCM	ON/OFF	4P*2, 4Q*3
FUELPW	Fuel injection duration in PCM	Time	4W, 4Z, 4AA, 4AD
FUELSYS	Fuel system status (Open/Closed loop)	Open loop/ Closed loop	—
GENVDSD	Generator voltage desired	V	—
HTR11	Front HO2S heater control signal in PCM	ON/OFF	4A
HTR12	Rear HO2S heater control signal in PCM	ON/OFF	4D
IAC	IAC valve duty value in PCM	%	4G, 4J
IAT	IAT	°C or °F	2E
	IAT signal voltage	V	2E
IMRC	Variable tumble control solenoid control signal in PCM	ON/OFF	4T
IMTV	Variable intake-air system (VIS) solenoid control signal in PCM	ON/OFF	4R
INGEAR	In gear	ON/OFF	1R,1W
IVS	Idle validation switch	ON/OFF	2A
KNOCKR	Spark retard value to prevent knocking	ANGLE	2P, 2S

PID item	Definition	Unit/Condition	PCM terminal
LOAD	Calculated engine load in PCM	%	—
LONGFT1	Current long fuel trim (RH) adjustment (Learning correction value) in PCM	%	—
MAF	Mass air flow amount	g/s	1P
	MAF signal voltage	V	1P
MAP	Manifold absolute pressure sensor	Pressure	1J
	Manifold absolute pressure signal voltage	V	1J
MIL	Malfunction indicator light control signal in PCM	ON/OFF	4I
MIL_DIS	Distance travelled since the MIL was illuminated	Distance	—
O2S11	Front HO2S signal voltage	V	1AB
O2S12	Rear HO2S signal voltage	V	1Y
PSP	PSP switch	ON/OFF	1Z
RFCFLAG	Adaptive memory condition	—	—
RO2FT1	Rear oxygen sensor fuel trim	%	—
RPM	Engine speed	rpm	2D,2G
SEGRP	EGR valve (stepping motor) position in PCM	No. of step	4E, 4H, 4K, 4N
SHRTFT1	Current short fuel trim adjustment in PCM	%	—
SPARKADV	Ignition timing control signal in PCM	BTC	2J, 2M
TEST	TEN terminal (DLC in engine compartment)	ON/OFF	1I
TP	TP	%	2A
	TP sensor signal voltage	V	2A
TPCT	Lowest closed throttle voltage	V	2A
VPWR	Battery positive voltage	V	2Y, 2Z
VSS	Vehicle speed	KPH or MPH	2L

*1 : Freeze frame data stored when pending code is detected
*2 : With immobilizer system
*3 : Without immobilizer system

End Of Sie

SIMULATION TEST

AME417018881W06

- The simulation test items for the fuel and emission control systems are as shown in the table below.

Simulation item table

×: Applied
—: Not applied

Simulation item	Applicable component	Operation	Test condition		PCM terminal
			IG ON	Idle	
ACCS	A/C relay	ON or OFF	×	×	4O
ALTF	Generator field coil control duty value	ON or OFF	—	×	1AD
ARPMDES	Desired RPM		×	×	—
EVAPCP	Purge solenoid valve	For purge solenoid valve: Actuated by any duty value (0—100%)	×	×	4U
FAN DUTY	Fan control module	Actuated by any duty value (0—100%)	×	×	1U
FP	Fuel pump relay	ON or OFF	×	×	4P*1, 4Q*2
FUELPW1	Fuel injection duration	Actuated +50%— -50% fuel injection time	—	×	4W, 4Z, 4AA, 4AD
GENVDSD	Generator voltage desired		—	×	—
HTR11	Front heated exhaust gas oxygen sensor heater	ON or OFF	×	×	4A
HTR12	Rear heated exhaust gas oxygen sensor heater	ON or OFF	×	×	4D
IAC	Idle air control	Actuated by any duty value (0—100%)	×	×	4G, 4J
IMRC	Variable tumble control solenoid control signal in PCM	ON or OFF	×	×	4T

Simulation item	Applicable component	Operation	Test condition		PCM terminal
			IG ON	Idle	
IMTV	Variable intake-air system (VIS) solenoid control signal in PCM	ON or OFF	×	×	4R
INJ#1	Fuel injector (Cylinder No.1)	ON or OFF	—	×	4Z
INJ#2	Fuel injector (Cylinder No.2)	ON or OFF	—	×	4W
INJ#3	Fuel injector (Cylinder No.3)	ON or OFF	—	×	4AD
INJ#4	Fuel injector (Cylinder No.4)	ON or OFF	—	×	4AA
SEGRP	EGR valve (stepping motor)	Actuated by any stepping value (0—60 steps)	×	×	4E, 4H, 4K, 4N
TEST	TEN terminal	ON or OFF	×	×	1I

*1 : With immobilizer system
*2 : Without immobilizer system

End Of Sie

KOEO/KOER SELF-TEST

AME417018881W07

- The self-test function consists of the KOEO (Key On, Engine Off) self-test, performed when the ignition key is at ON, and the KOER (Key On, Engine Running) self-test, performed when idling. If a malfunction is detected as either self-test is executed, it is displayed on the WDS or equivalent. Using the self-test function, the present malfunction or a successful repair is readily confirmed. Refer to the self-test function table for the corresponding DTCs.

  KOEO (Key ON, Engine Off) self-test

  — The KOEO self-test is a powertrain control system self-diagnosis, performed when the ignition key is at ON and the engine is stopped. A KOEO self-test begins when the connected WDS or equivalent sends an execute command to the PCM.

  — As the KOEO self-test is performed, the PCM performs inspection for the set DTCs and if a malfunction is detected the DTC is displayed on the WDS or equivalent.

  KOER (Key ON, Engine Running) self-test

  — The KOER self-test is a powertrain control system self-diagnosis, performed when the ignition key is at ON and the engine is idling. A KOER self-test begins when the connected WDS or equivalent sends an execute command to the PCM.

  — As the KOER self-test is performed, the PCM performs inspection for the set DTCs and if a malfunction is detected the DTC is displayed on the WDS or equivalent.

KOEO/KOER self-test function table

×: Applicable
—: Not applicable

DTC No.	Condition	KOEO	KOER
P0031	Front HO2S heater circuit low input	×	×
P0032	Front HO2S heater circuit high input	×	×
P0037	Rear HO2S heater circuit low input	×	×
P0038	Rear HO2S heater circuit high input	×	×
P0101	MAF sensor inconsistent with TP sensor	—	—
P0102	MAF circuit low input	×	×
P0103	MAF circuit high input	×	×
P0107	MAP sensor circuit low input	×	×
P0108	MAP sensor circuit high input	×	×
P0111	IAT circuit performance problem	—	—
P0112	IAT circuit low input	×	×
P0113	IAT circuit high input	×	×
P0117	ECT circuit low input	×	×
P0118	ECT circuit high input	×	×
P0121	Throttle position stuck closed	—	—
P0122	TP circuit low input	×	×
P0123	TP circuit high input	×	×
P0125	Excessive time to enter closed loop fuel control	—	—
P0131	Front HO2S no inversion (low stuck)	—	—
P0132	Front HO2S no inversion (high stuck)	—	×
P0133	Front HO2S circuit malfunction	—	—
P0134	Front HO2S circuit no activity detected	—	×

DTC No.	Condition	KOEO	KOER
P0138	Rear HO2S circuit high input	—	—
P0140	Rear HO2S circuit no activity detected	—	×
P0171	Fuel trim system too lean	—	—
P0172	Fuel trim system too rich	—	—
P0300	Random misfire detected	—	—
P0301	Cylinder No.1 misfire detected	—	—
P0302	Cylinder No.2 misfire detected	—	—
P0303	Cylinder No.3 misfire detected	—	—
P0304	Cylinder No.4 misfire detected	—	—
P0327	Knock sensor circuit low input	×	×
P0328	Knock sensor circuit high input	×	×
P0335	CKP sensor circuit malfunction	—	—
P0340	CMP sensor circuit malfunction	—	—
P0403	EGR valve motor coils open or short	×	×
P0420	Catalyst system efficiency below threshold	—	—
P0443	Evaporative emission control system purge control valve circuit malfunction	×	×
P0480	Fan control module circuit malfunction	×	×
P0500	Vehicle speed sensor (VSS) circuit malfunction	—	—
P0505	Idle control system malfunction	—	×
P0506	Idle control system RPM lower than expected	—	—
P0507	Idle control system RPM higher than expected	—	—
P0511	IAC valve circuit malfunction	×	×
P0550	PSP switch circuit malfunction	—	—
P0661	VIS circuit low input	×	×
P0662	VIS circuit high input	×	×
P0703	Brake switch input malfunction	—	—
P0704	Clutch switch input malfunction	—	—
P0850	Neutral switch input malfunction	—	—
P1562	PCM +BB voltage low	×	×
P1602	Immobilizer unit-PCM communication error	×	—
P1603	Key ID numbers are not registered in PCM	×	—
P1604	Code word is not registered in PCM	×	—
P1621	Code word does not match after engine cranking	×	—
P1622	Key ID number does not match	×	—
P1623	Code word or key ID number read/write error in PCM	×	—
P1624	Immobilizer system communication counter=0	×	—
P2006	VTCS shutter valve stuck closed	—	—
P2009	Variable tumble control solenoid circuit low input	×	×
P2010	Variable tumble control solenoid circuit high input	×	×
P2228	BARO sensor circuit low input	×	×
P2229	BARO sensor circuit high input	×	×
P2502	Generator output voltage signal no electricity	—	×
P2503	Battery overcharge	—	×
P2504	Generator terminal B circuit open	—	×

End Of Sta

LOCATION INDEX

INTAKE-AIR SYSTEM

AME410013000W01

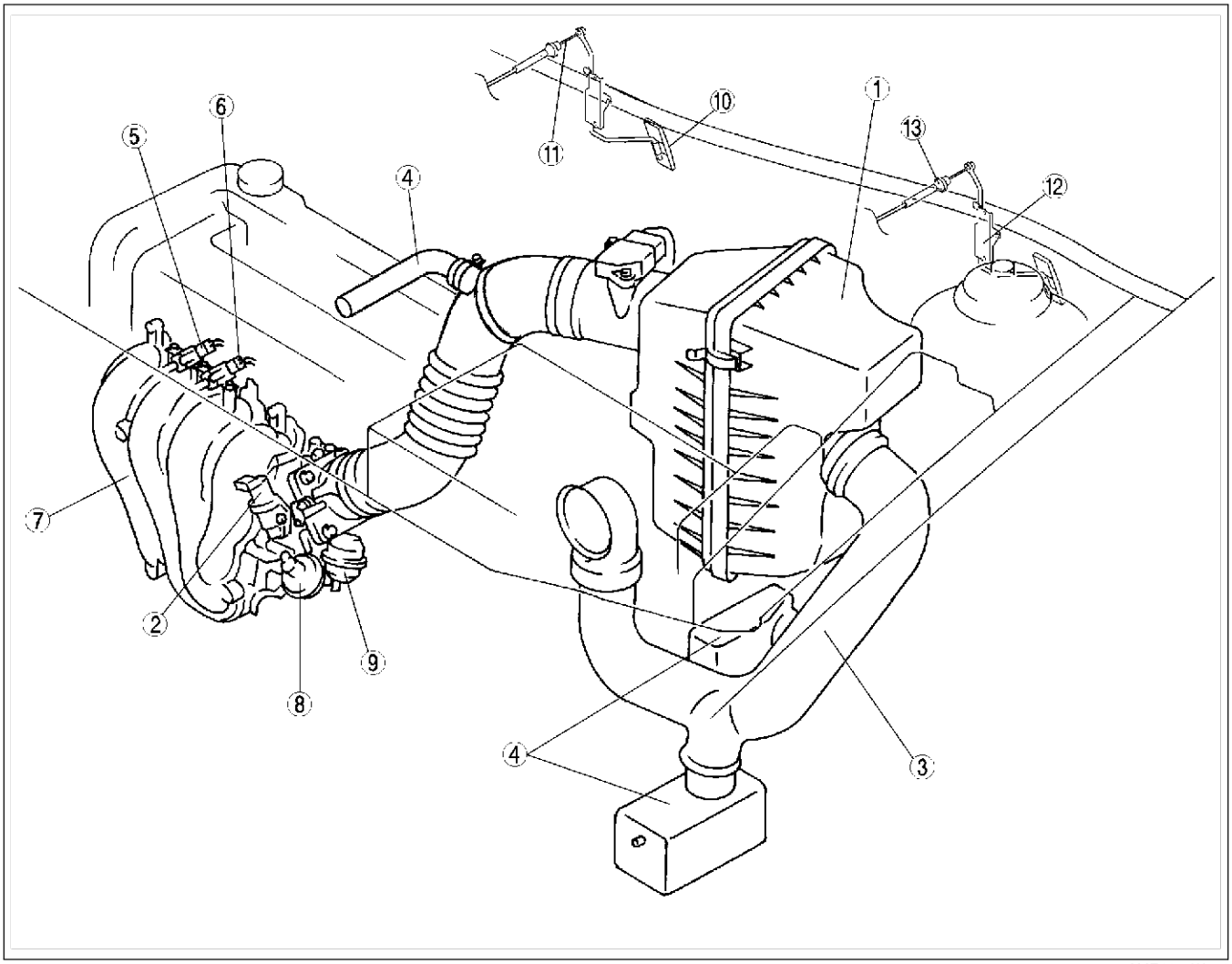

AME4100W001

1	Air cleaner (See F3–50 INTAKE-AIR SYSTEM REMOVAL/ INSTALLATION)
2	IAC valve (See F3–52 IDLE AIR CONTROL (IAC) VALVE INSPECTION)
3	Fresh-air duct (See F3–50 INTAKE-AIR SYSTEM REMOVAL/ INSTALLATION)
4	Resonance chamber (See F3–50 INTAKE-AIR SYSTEM REMOVAL/ INSTALLATION)
5	VIS control solenoid valve (See F3–53 VARIABLE INTAKE-AIR SYSTEM (VIS) CONTROL SOLENOID VALVE INSPECTION)
6	Variable tumble control solenoid valve (See F3–54 VARIABLE TUMBLE CONTROL SOLENOID VALVE INSPECTION)
7	Intake manifold (See F3–50 INTAKE-AIR SYSTEM REMOVAL/ INSTALLATION)

8	VIS shutter valve actuator (See F3–53 VARIABLE INTAKE-AIR SYSTEM (VIS) SHUTTER VALVE ACTUATOR INSPECTION)
9	VTCS shutter valve actuator (See F3–54 VARIABLE TUMBLE CONTROL SYSTEM (VTCS) SHUTTER VALVE ACTUATOR INSPECTION)
10	Accelerator pedal (R.H.D.) (See F3–55 ACCELERATOR PEDAL REMOVAL/ INSTALLATION)
11	Accelerator cable (R.H.D.) (See F3–55 ACCELERATOR CABLE INSPECTION) (See F3–56 ACCELERATOR CABLE ADJUSTMENT)
12	Accelerator pedal (L.H.D.) (See F3–55 ACCELERATOR PEDAL REMOVAL/ INSTALLATION)
13	Accelerator cable (L.H.D.) (See F3–55 ACCELERATOR CABLE INSPECTION) (See F3–56 ACCELERATOR CABLE ADJUSTMENT)

FUEL SYSTEM

AME410001006W01

Engine Room Side

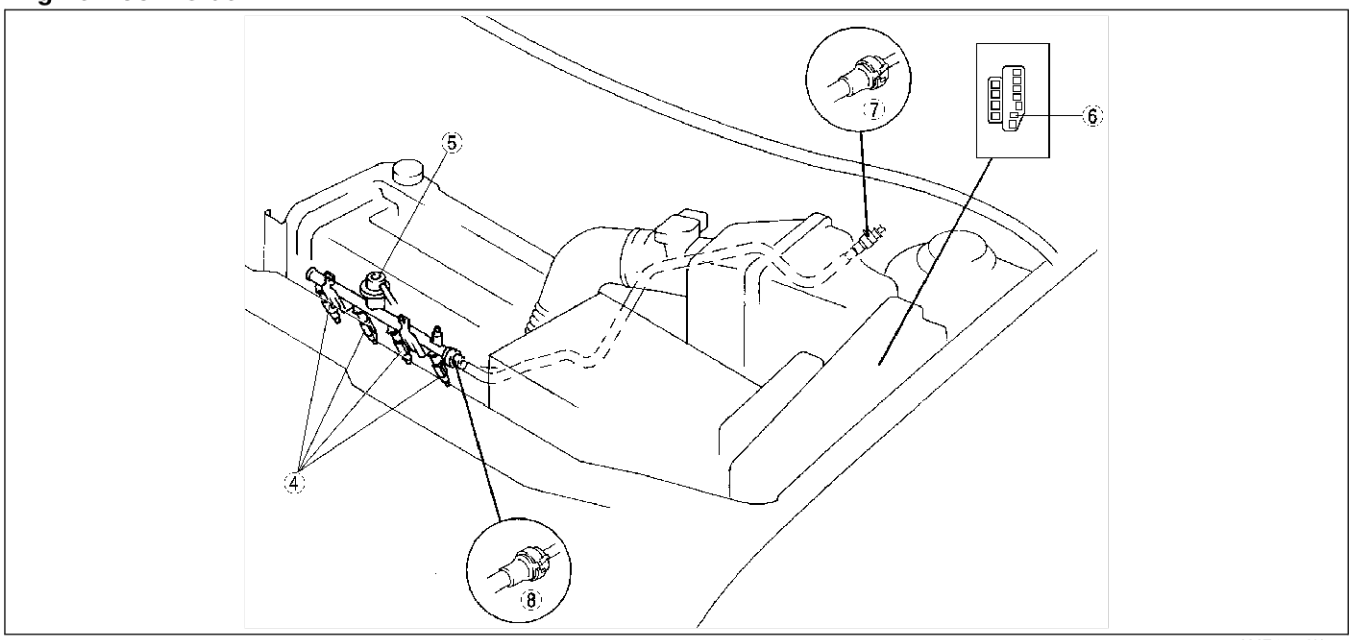

AME4100W002

Fuel Tank Side

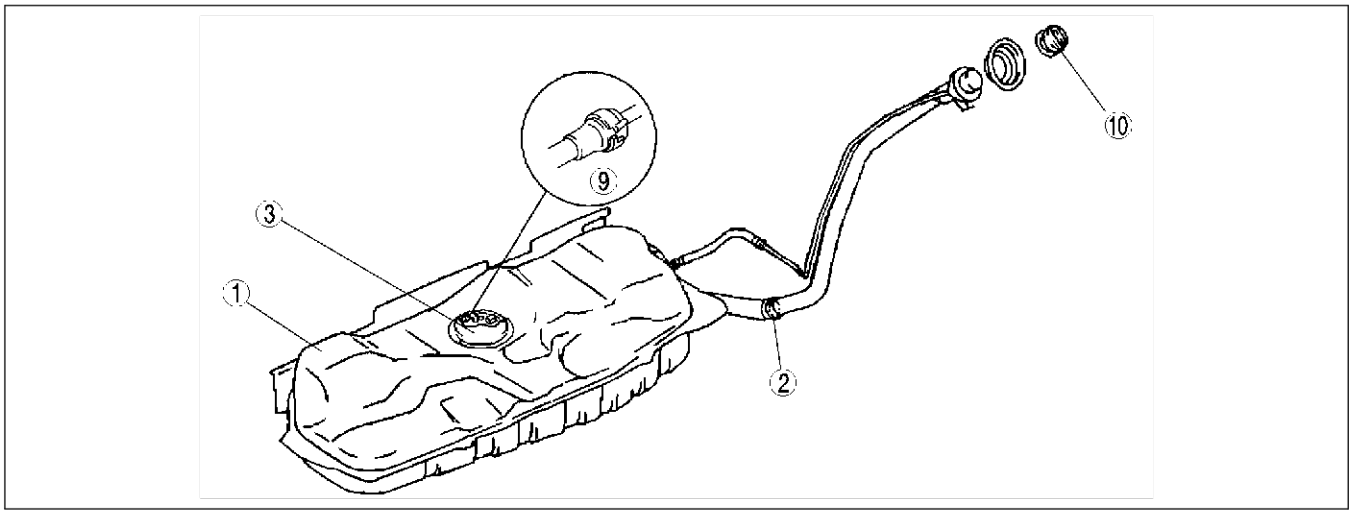

AME4100W003

1	Fuel tank (See F3–59 FUEL TANK REMOVAL/ INSTALLATION) (See F3–61 FUEL TANK INSPECTION)
2	Nonreturn valve (See F3–62 NONRETURN VALVE INSPECTION)
3	Fuel pump unit (See F3–62 FUEL PUMP UNIT REMOVAL/ INSTALLATION) (See F3–65 FUEL PUMP UNIT DISASSEMBLY/ ASSEMBLY) (See F3–65 FUEL PUMP UNIT INSPECTION)

4	Fuel injector (See F3–66 FUEL INJECTOR REMOVAL/ INSTALLATION) (See F3–70 FUEL INJECTOR INSPECTION)
5	Pulsation damper (See F3–72 PULSATION DAMPER REMOVAL/ INSTALLATION) (See F3–72 PULSATION DAMPER INSPECTION)
6	Fuel pump relay (See T–28 RELAY INSPECTION)
7	Quick release connector (engine room side)
8	Quick release connector (fuel distributor side)
9	Quick release connector (fuel tank side)
10	Fuel filler cap

End Of Sie

EMISSION SYSTEM

AME410001074W01

Engine Room Side

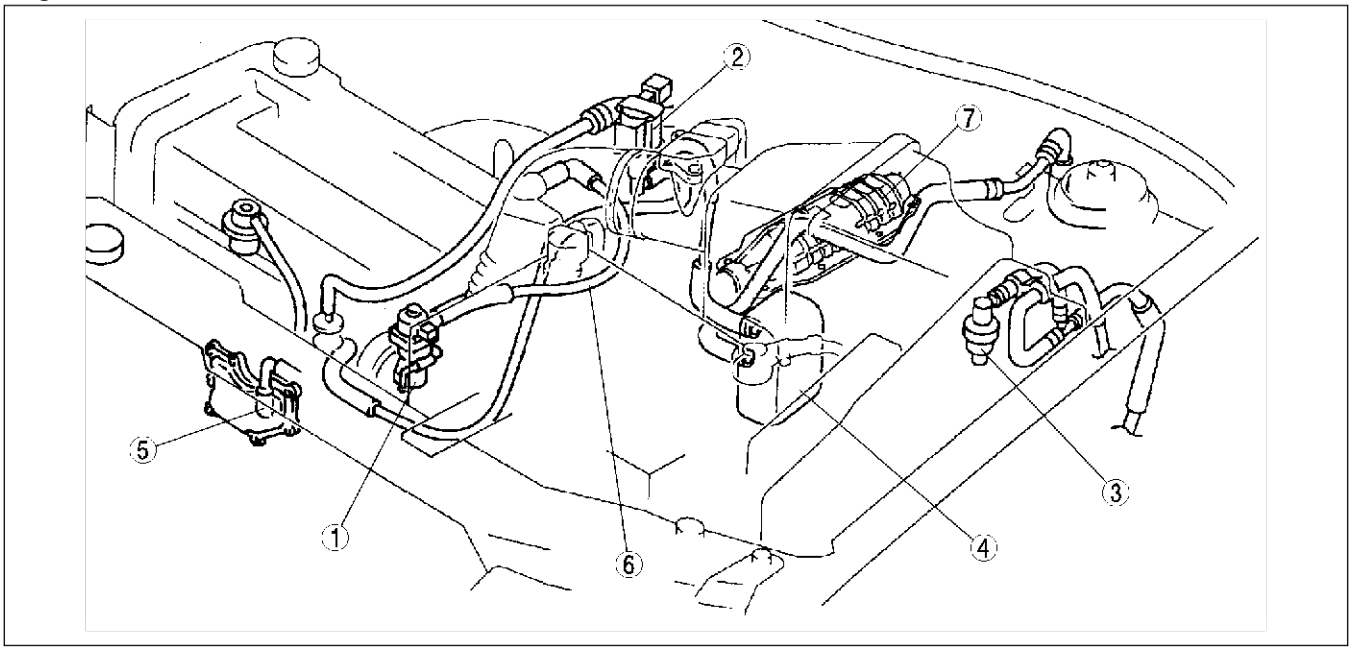

AME4116W001

Fuel Tank Side

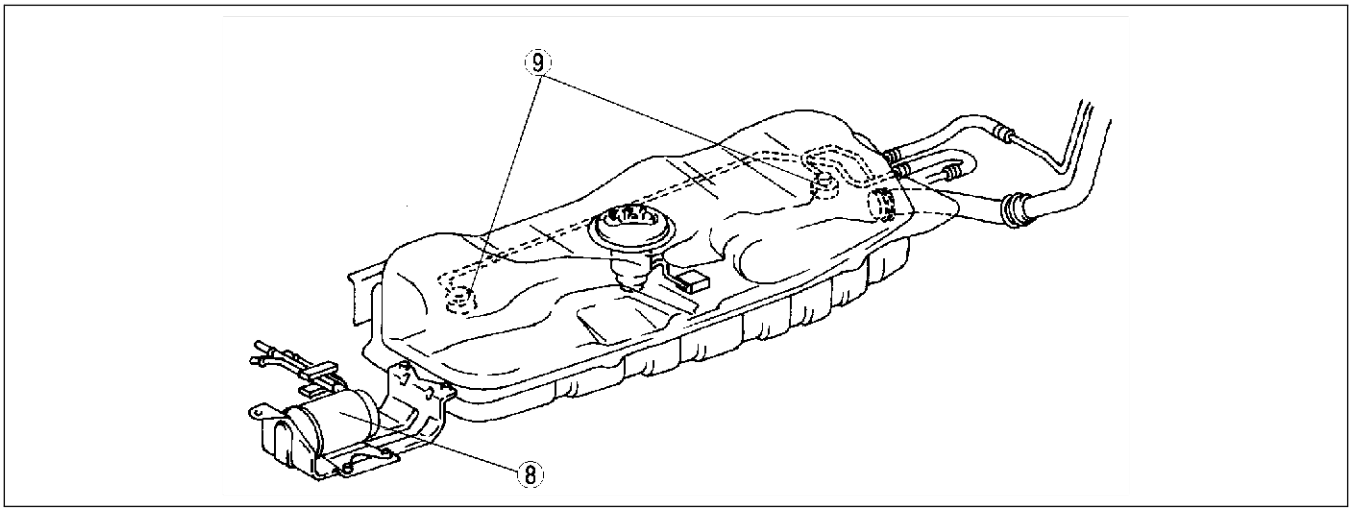

AME4116W002

1	EGR valve (See F3–77 EGR VALVE REMOVAL/INSTALLATION) (See F3–78 EGR VALVE INSPECTION)
2	Purge solenoid valve (See F3–76 PURGE SOLENOID VALVE REMOVAL/INSTALLATION) (See F3–76 PURGE SOLENOID VALVE INSPECTION)
3	Evaporative gas check valve (one-way) (See F3–75 EVAPORATIVE GAS CHECK VALVE (ONE-WAY) INSPECTION)

4	Catch tank (See F3–76 CATCH TANK INSPECTION)
5	PCV valve (See F3–79 PCV VALVE INSPECTION)
6	Ventilation hose
7	TWC (See F3–79 THREE-WAY CATALYTIC CONVERTER (TWC) INSPECTION)
8	Charcoal canister (See F3–75 CHARCOAL CANISTER REMOVAL/INSTALLATION) (See F3–75 CHARCOAL CANISTER INSPECTION)
9	Rollover valve

End Of Ste

CONTROL SYSTEM

AME410001074W02

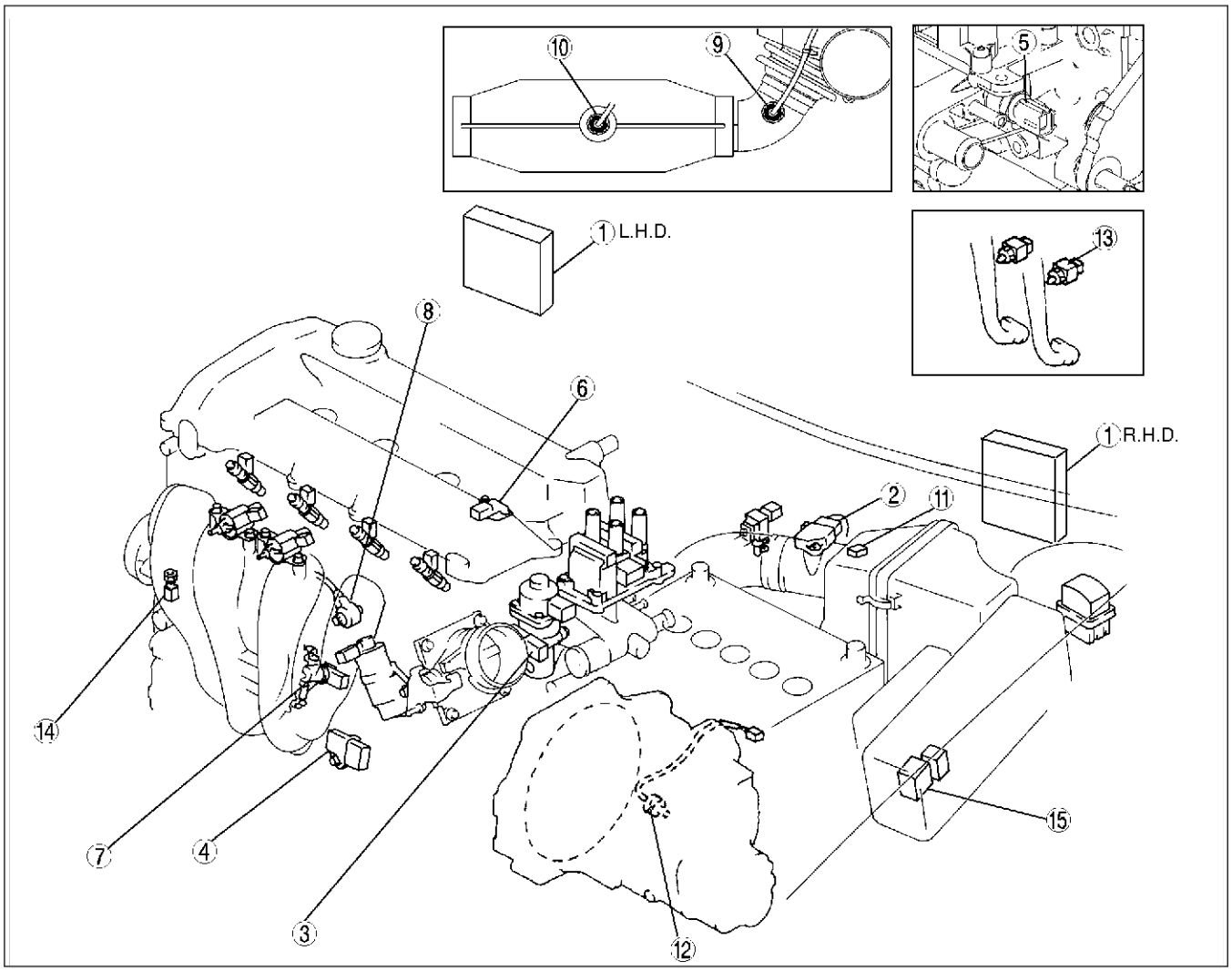

AME4100W004

1	PCM (See F3–81 PCM REMOVAL/INSTALLATION) (See F3–83 PCM INSPECTION)
2	MAF/IAT sensor (See F3–88 MASS AIR FLOW (MAF) SENSOR INSPECTION) (See F3–87 INTAKE AIR TEMPERATURE (IAT) SENSOR INSPECTION)
3	TP sensor (See F3–88 THROTTLE POSITION (TP) SENSOR INSPECTION)
4	MAP sensor (See F3–89 MANIFOLD ABSOLUTE PRESSURE (MAP) SENSOR INSPECTION)
5	ECT sensor (See F3–90 ENGINE COOLANT TEMPERATURE (ECT) SENSOR REMOVAL/INSTALLATION) (See F3–90 ENGINE COOLANT TEMPERATURE (ECT) SENSOR INSPECTION)
6	CMP sensor (See F3–92 CAMSHAFT POSITION (CMP) SENSOR INSPECTION)
7	CKP sensor (See F3–91 CRANKSHAFT POSITION (CKP) SENSOR INSPECTION) (See F3–91 CRANKSHAFT POSITION (CKP) SENSOR REMOVAL/INSTALLATION)

8	Knock sensor (See F3–93 KNOCK SENSOR INSPECTION) (See F3–94 KNOCK SENSOR REMOVAL/INSTALLATION)
9	Front HO2S sensor (integrated O2S heater) (See F3–94 HEATED OXYGEN SENSOR (HO2S) INSPECTION)
10	Rear HO2S sensor (integrated O2S heater) (See F3–94 HEATED OXYGEN SENSOR (HO2S) INSPECTION)
11	BARO sensor (See F3–97 BAROMETRIC PRESSURE (BARO) SENSOR INSPECTION)
12	Neutral switch (See F3–97 NEUTRAL SWITCH INSPECTION)
13	Clutch switch (See F3–96 CLUTCH SWITCH INSPECTION)
14	PSP switch (See F3–95 POWER STEERING PRESSURE (PSP) SWITCH INSPECTION)
15	Main relay (See T–28 RELAY INSPECTION)

ENGINE TUNE-UP

IGNITION TIMING INSPECTION

AME410802000W01

Note
- Ignition timing is not adjustable.
- Ignition timing verification requires WDS or equivalent.

1. Turn off the electrical loads.
2. Warm up the engine as follows.
   (1) Start the engine.
   (2) Maintain the engine speed at **approx. 3,000 rpm** until the cooling fans start to operate.
   (3) Release the accelerator pedal.
   (4) Wait until the cooling fans stop.
3. Verify that the ignition timing (WDS: SPARKADV PID) is within the specification using WDS or equivalent.

Ignition timing
Approx. BTDC 8 degree

4. Verify that ingestion timing advances when the engine speed increases gradually.

End Of Sie

IDLE SPEED INSPECTION

AME410802000W02

Note
- Ignition timing is not adjustable.
- Ignition timing verification requires WDS or equivalent.

1. Turn off the electrical loads.
2. Warm up the engine as follows.
   (1) Start the engine.
   (2) Maintain the engine speed at **approx. 3,000 rpm** until the cooling fans start to operate.
   (3) Release the accelerator pedal.
   (4) Wait until the cooling fans stop.
3. Verify that the idle speed (WDS: RPM PID) is within the specification using WDS or equivalent.

Idle speed)

Condition	Engine speed (rpm)*1
No load	600—700
Electrical loads*2 ON	600—700
P/S ON	650—750
A/C ON	650—750

*1 : Excludes temporary idle speed drop just after the electrical loads are turned on.
*2 : Blower motor is operating at high speed. Headlight switch is turned on. Rear window defroster switch is turned on. Cooling fans are operating.

End Of Sie

IDLE MIXTURE INSPECTION

AME410802000W03

1. Turn off the electrical loads.
2. Warm up the engine as follows.
   (1) Start the engine.
   (2) Maintain the engine speed at **approx. 3,000 rpm** until the cooling fans start to operate.
   (3) Release the accelerator pedal.
   (4) Wait until the cooling fans stop.
3. Verify that the idle speed and ignition timing are within the specification. (See F3–49 IDLE SPEED INSPECTION.) (See F3–49 IGNITION TIMING INSPECTION.)
4. Insert an exhaust gas analyzer to the tailpipe.
5. Verify that the CO and HC concentrations are within the regulation.

End Of Sie

INTAKE-AIR SYSTEM

VACUUM HOSE ROUTING DIAGRAM

AME411020030W01

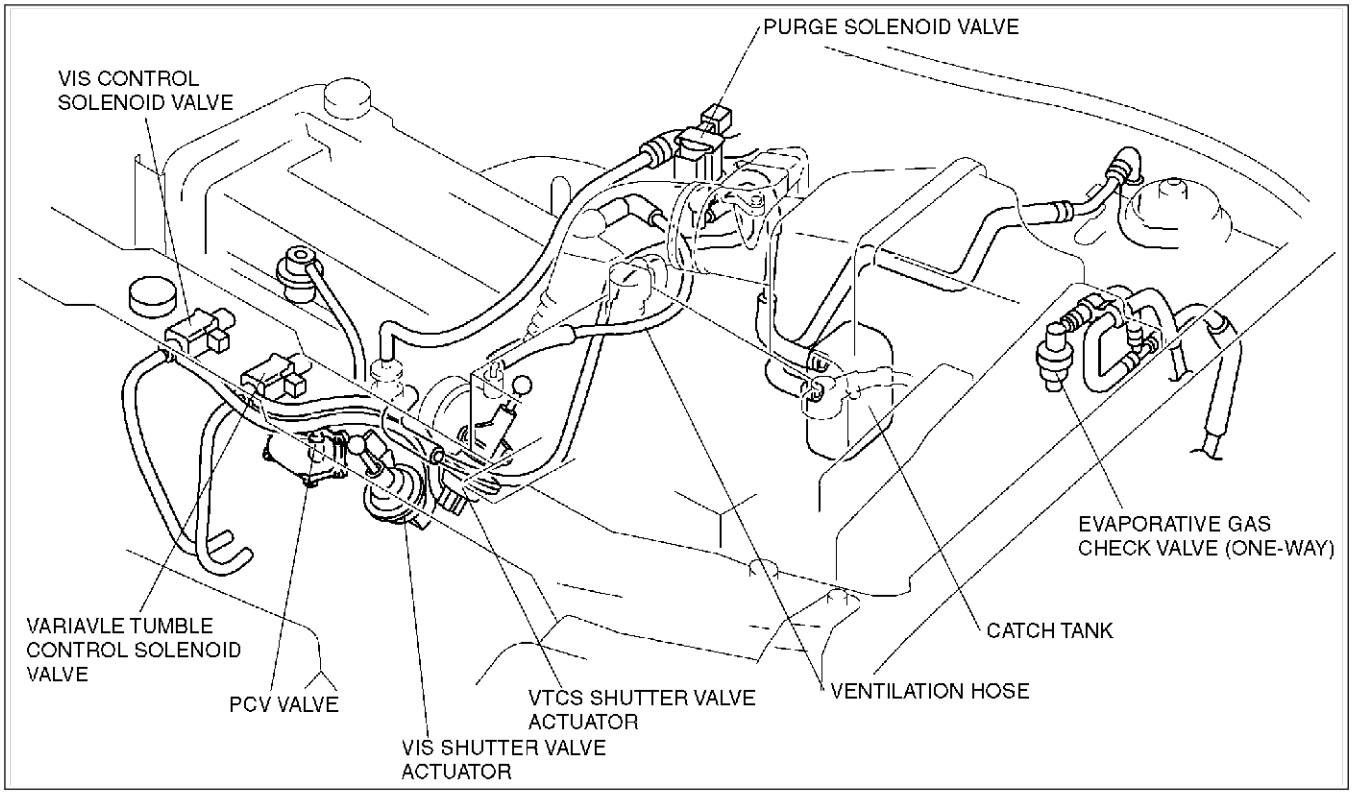

AME4110W009

End Of Sec

INTAKE-AIR SYSTEM REMOVAL/INSTALLATION

AME411013000W03

Warning

- **When the engine and intake-air system are hot, they can badly burn. Turn off the engine and wait until they are cool before removing the intake-air system.**
- **Fuel vapor is hazardous. It can easily ignite, causing serious injury and damage. Always keep sparks and flames away from fuel.**
- **Fuel line spills and leakage are dangerous. Fuel can ignite and cause serious injuries or death and damage. Fuel can also irritate skin and eyes. To prevent this, always complete the "Fuel Line Safety Procedure". (See F3–57 BEFORE REPAIR PROCEDURE.)**

1. Disconnect the negative battery cable.
2. Remove in the order indicated in the table.
3. Install in the reverse order of removal.
4. Complete the "AFTER REPAIR PROCEDURE". (See F3–57 AFTER REPAIR PROCEDURE.)

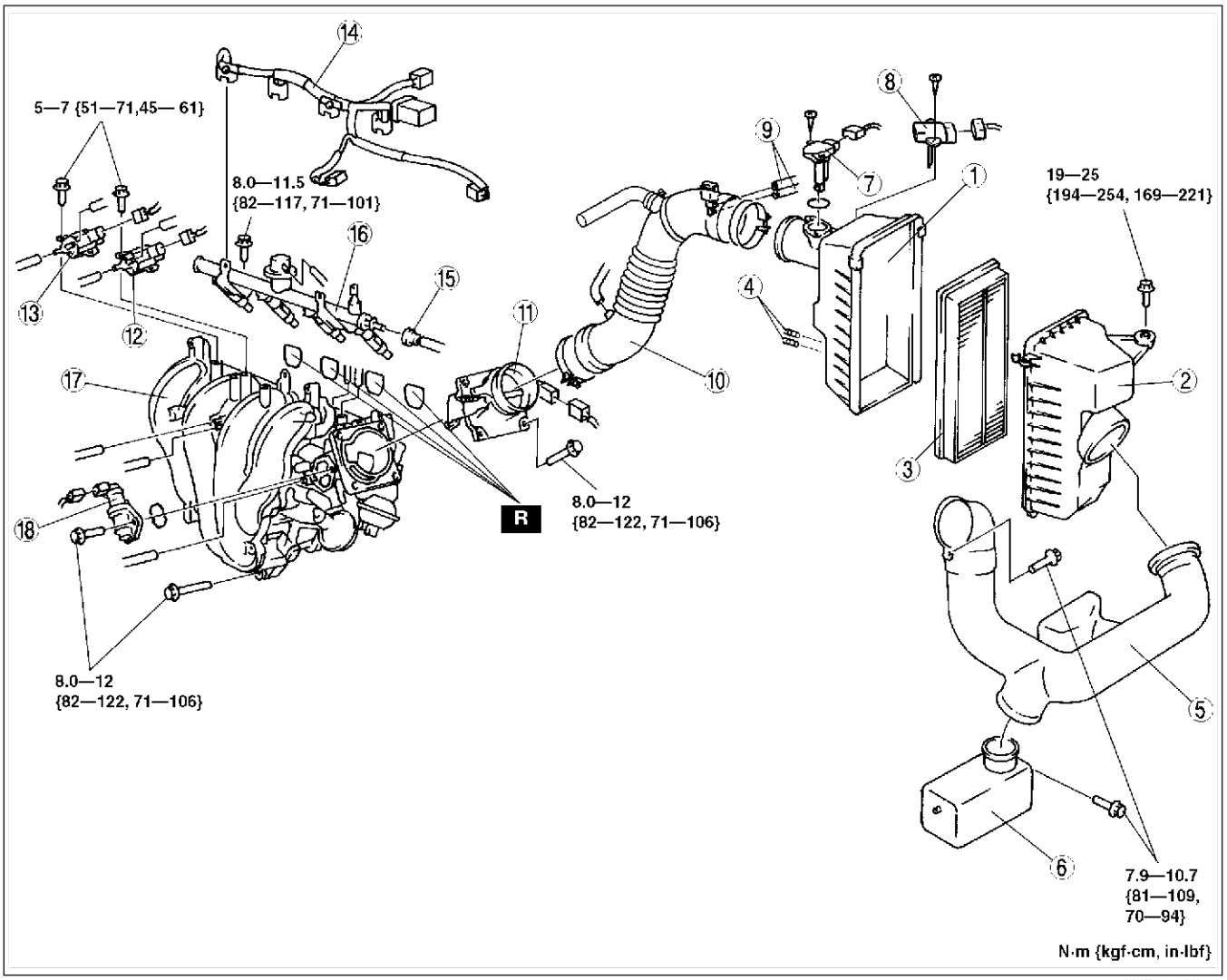

AME4110W008

1	Air cleaner cover
2	Air cleaner case
3	Air cleaner element
4	Vacuum hose (catch tank) (See F3–52 Vacuum Hose (Catch Tank) Installation Note)
5	Fresh-air duct (See F3–51 Fresh-air Duct Removal Note)
6	Resonance chamber (See F3–51 Resonance Chamber Removal Note)
7	Mass air flow sensor
8	Barometric pressure sensor
9	Vacuum/Evaporative hose (See F3–76 Vacuum/Evaporative Hose Installation Note)

10	Air hose
11	Throttle body
12	Variable tumble control solenoid valve
13	VIS solenoid valve
14	Fuel injector connector
15	Plastic fuel hose (See F3–67 Plastic Fuel Hose Removal Note) (See F3–69 Plastic Fuel Hose Installation Note)
16	Fuel distributor
17	Intake manifold (See F3–52 Intake Manifold Removal Note)
18	IAC valve

Fresh-air Duct Removal Note

1. Remove the fuse box, battery and battery tray before removing the fresh-air duct. (See G–9 BATTERY REMOVAL/INSTALLATION.)

Resonance Chamber Removal Note

1. Remove the front mudguard (LH) before removing the resonance chamber.

Intake Manifold Removal Note

1. Remove the fan component.
   (1) Remove the transverse member.
   (2) Remove the engine mounting member. (See B3–46 ENGINE REMOVAL/INSTALLATION.)
   (3) Remove the No.2 engine mount. (See B3–51 ENGINE DISASSEMBLY/ASSEMBLY.)
   (4) Remove the fan assembly. (See E–20 COOLING FAN MOTOR REMOVAL/INSTALLATION.)
2. Remove the intake manifold.
   (1) Remove the intake manifold mounting bolts.
   (2) Remove the EGR pipe.
   (3) Remove the intake manifold.

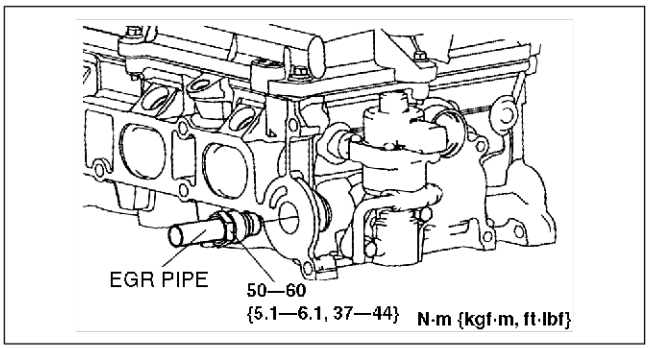

AME4116W005

Vacuum Hose (Catch Tank) Installation Note

1. Fit the vacuum hose (catch tank) onto the respective fittings, and install clamps as shown.

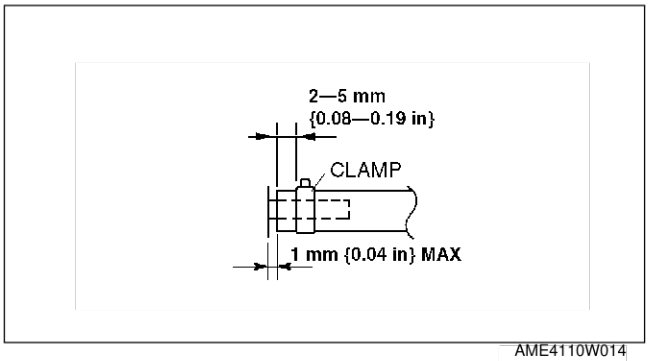

AME4110W014

End Of Sie

IDLE AIR CONTROL (IAC) VALVE INSPECTION

AME411020661W01

Note

- Perform the following inspection only when directed.

Operation Test

1. Carry out the “Idle Air Control Inspection”. (See F3–272 Idle Air Control System Inspection.)
   - If not as specified, perform the further inspection for the IAC valve.

Resistance Inspection

1. Disconnect the negative battery cable.
2. Disconnect the IAC valve connector.
3. Measure the resistance between the IAC valve terminals using an ohmmeter.
   - If not as specified, replace the IAC valve. (See F3–50 INTAKE-AIR SYSTEM REMOVAL/INSTALLATION.)
   - If as specified but the Operation Test is failed, carry out the “Circuit Open/Short Inspection”.

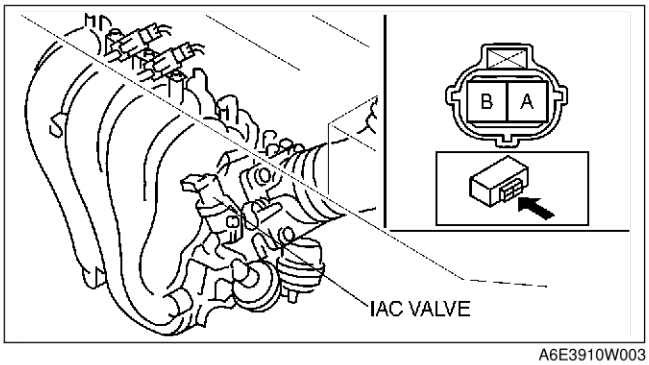

A6E3910W003

Specification

Ambient temperature (°C {°F})	Resistance (ohms)
23 {73}	8.8—10.6

Circuit Open/Short Inspection

1. Disconnect the PCM connector. (See F3–81 PCM REMOVAL/INSTALLATION.)
2. Inspect the following wiring harnesses for open or short (continuity check).

Open circuit

- If there is no continuity, the circuit is open. Repair or replace the harness.
  - — IAC valve terminal A (harness-side) and PCM terminal 4G
  - — IAC valve terminal B (harness-side) and PCM terminal 4J

Short circuit

- If there is continuity, the circuit is shorted. Repair or replace the harness.
  - — IAC valve terminal A (harness-side) and power supply
  - — IAC valve terminal A (harness-side) and GND
  - — IAC valve terminal B (harness-side) and power supply
  - — IAC valve terminal B (harness-side) and GND

End Of Ste

VARIABLE INTAKE-AIR SYSTEM (VIS) SHUTTER VALVE ACTUATOR INSPECTION

AME411013000W04

1. Remove the air hose. (See F3–50 INTAKE-AIR SYSTEM REMOVAL/INSTALLATION.)
2. Disconnect the vacuum hose from the VIS shutter valve actuator.
3. Connect a vacuum pump to the VIS shutter valve actuator.
4. Apply vacuum and verify that the rod moves.
   - If the rod dose not move, replace the intake manifold.

Vacuum kPa {mmHg, inHg}	Rod movement
Below –2.7 {–20, –0.7 }	Starts to move
Above –34.7 {–260, –10.2 }	Fully pulled

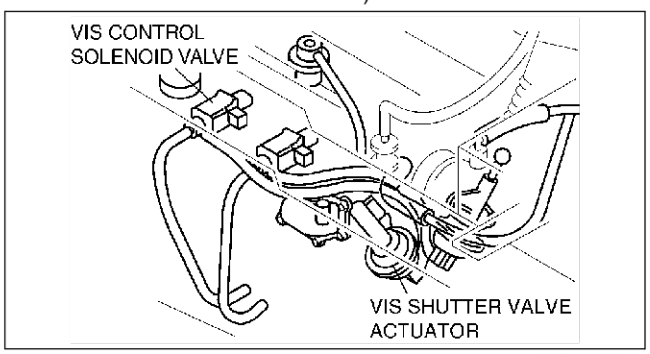

A6E3910W008

End Of Ste

VARIABLE INTAKE-AIR SYSTEM (VIS) CONTROL SOLENOID VALVE INSPECTION

AME411013000W05

1. Remove the VIS control solenoid valve. (See F3–50 INTAKE-AIR SYSTEM REMOVAL/INSTALLATION.)
2. Inspect airflow between the ports under the following conditions.
   - If not as specified, replace the VIS control solenoid valve.
   - If as specified, carry out the “Circuit Open/ Short Inspection”.

: Airflow

Step	Terminal		Port		
	A	B	A	B	C
1				○—○	
2	B+	GND	○	○	

A6E3910W009

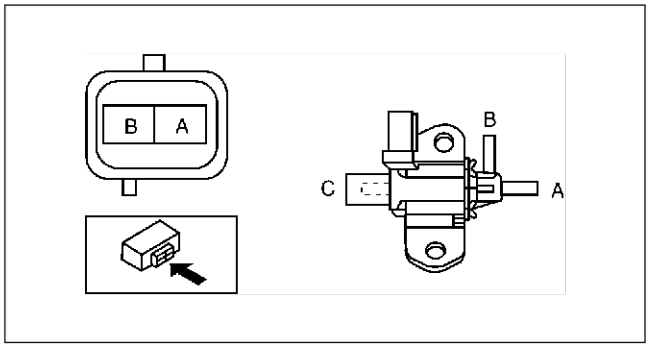

A6E3910W010

Circuit Open/Short Inspection

1. Disconnect the PCM connector. (See F3–81 PCM REMOVAL/INSTALLATION.)
2. Inspect the following wiring harness for open or short (continuity check).

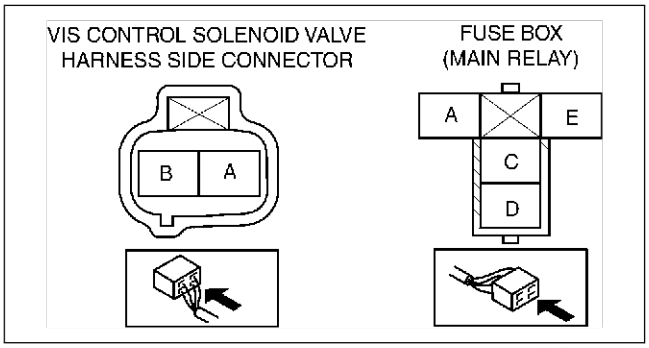

A6E3910W011

Open circuit

- If there is no continuity, the circuit is open. Repair or replace the harness.
  - — VIS control solenoid valve terminal A (harness-side) and PCM terminal 4R
  - — VIS control solenoid valve terminal B (harness-side) and main relay terminal C (harness-side)

Short circuit

- If there is continuity, the circuit is shorted. Repair or replace the harness.
  - — VIS control solenoid valve terminal A (harness-side) and body GND
  - — VIS control solenoid valve terminal B (harness-side) and power supply

End Of Sie

VARIABLE TUMBLE CONTROL SYSTEM (VTCS) SHUTTER VALVE ACTUATOR INSPECTION

AME411013000W06

1. Remove the air hose. (See F3–50 INTAKE-AIR SYSTEM REMOVAL/INSTALLATION.)
2. Disconnect the vacuum hose from the VTCS shutter valve actuator.
3. Connect a vacuum pump to the VTCS shutter valve actuator.
4. Apply vacuum and verify that the rod moves.
   - If the rod dose not move, replace the intake manifold.

Vacuum kPa {mmHg, inHg}	Rod movement
Below –2.7 {–20, –0.7 }	Starts to move
Above –34.7 {–260, –10.2 }	Fully pulled

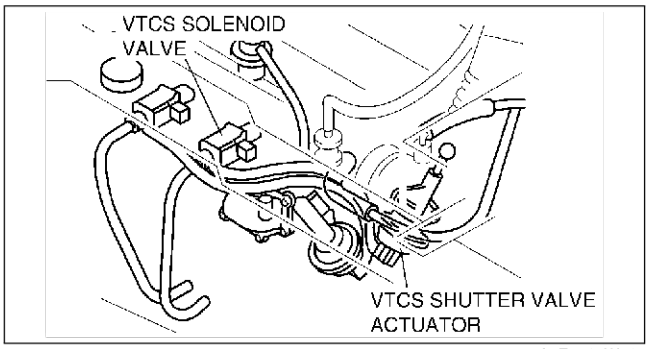

A6E3910W015

End Of Sie

VARIABLE TUMBLE CONTROL SOLENOID VALVE INSPECTION

AME411013000W07

1. Remove the variable tumble control solenoid valve. (See F3–50 INTAKE-AIR SYSTEM REMOVAL/INSTALLATION.)
2. Inspect airflow between the ports under the following conditions.
   - If not as specified, replace the variable tumble control solenoid valve.
   - If as specified, carry out the “Circuit Open/Short Inspection”.

: Airflow

Step	Terminal		Port		
	A	B	A	B	C
1				○—○	○—○
2	B+	GND	○—○		

A6E3910W009

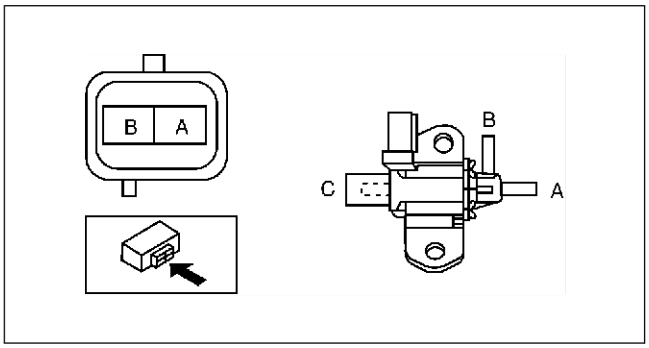

A6E3910W016

Circuit Open/Short Inspection

1. Disconnect the PCM connector. (See F3–81 PCM REMOVAL/INSTALLATION.)
2. Inspect the following wiring harness for open or short (continuity check).

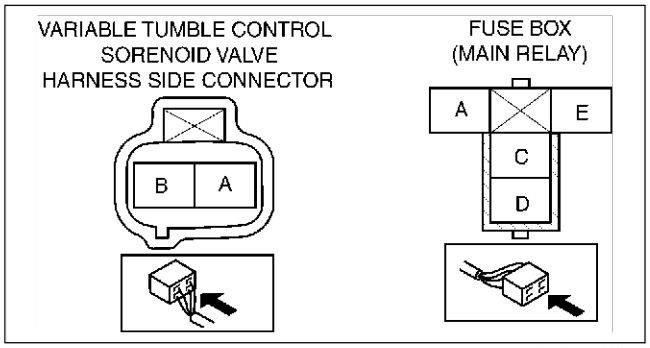

A6E3910W017

Open circuit

- If there is no continuity, the circuit is open. Repair or replace the harness.
  - — Variable tumble control solenoid valve terminal B (harness-side) and PCM terminal 4T
  - — Variable tumble control solenoid valve terminal A (harness-side) and main relay terminal C (harness-side)

Short circuit

- If there is continuity, the circuit is shorted. Repair or replace the harness.
  - — Variable tumble control solenoid valve terminal B (harness-side) and body GND
  - — Variable tumble control solenoid valve terminal A (harness-side) and power supply

End Of Sie

ACCELERATOR PEDAL REMOVAL/INSTALLATION

AME411041600W01

1. Remove in the order indicated in the table.

1	Accelerator cable F3–55 Accelerator Cable Installation Note)
2	Accelerator pedal

2. Install in the reverse order of removal.

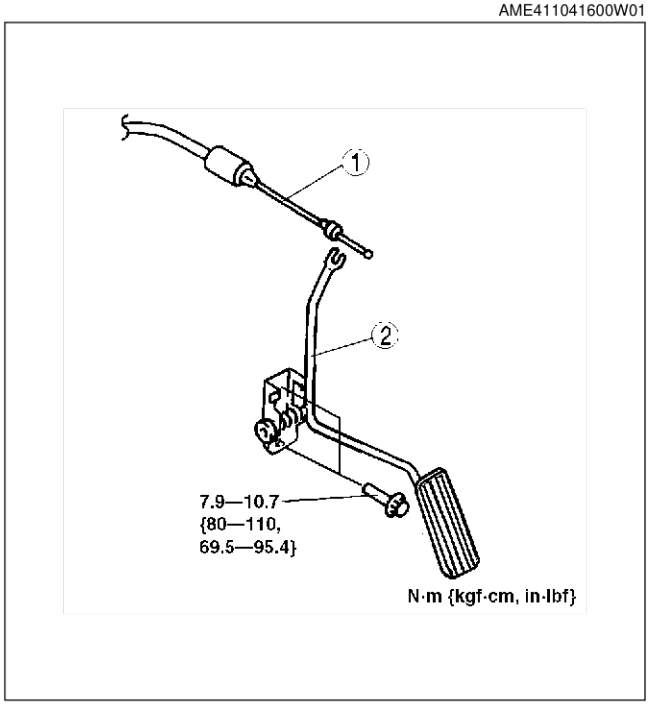

AME4210W005

Accelerator Cable Installation Note

1. Carry out the “ACCELERATOR CABLE ADJUSTMENT” procedure after installing the accelerator cable. (See F3–56 ACCELERATOR CABLE ADJUSTMENT.)

End Of Sie

ACCELERATOR CABLE INSPECTION

AME411041660W01

1. Verify that the throttle valve is closed.
2. Push the cable into the housing without turning the throttle plate and put a white mark on the cable at the end of the housing.
3. Release the cable and measure the distance from the white mark to the end of the cable housing.
   - If not within the specification, adjust the accelerator cable. (See F3–56 ACCELERATOR CABLE ADJUSTMENT.)

Free play
1.5—4.0 mm {0.06—0.15 in}

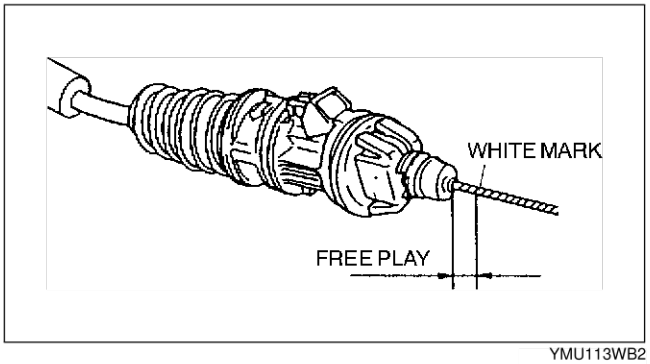

YMU113WB2

End Of Sie

ACCELERATOR CABLE ADJUSTMENT

AME411041660W02

1. Move the white locking tab A to the unlock position.
2. Turn stopper B to the unlock position.

Note
- If stopper B will not unlock, it may be necessary to carefully bend tab C out using a suitable tool.

3. To adjust the free play, push or pull the throttle cable housing directly behind the spring.
4. Measure the throttle cable free play, making sure that it is within the specification.

Free play
1.5—4.0 mm {0.06—0.15 in}

5. Turn stopper B to the lock position.
6. Move the white locking tab A to the lock position.
7. Verify correct accelerator operation.

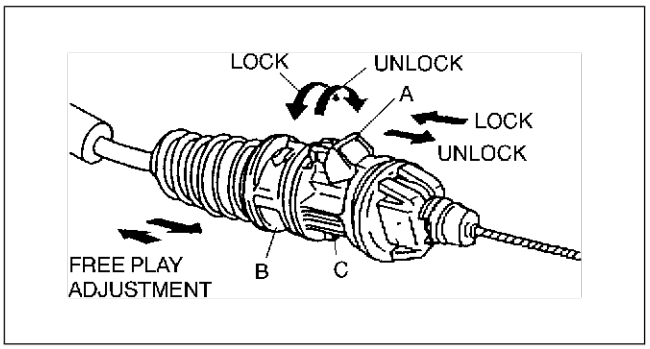

YMU113WAB

End Of Sie

FUEL SYSTEM

BEFORE REPAIR PROCEDURE

AME411201006W03

Warning

- **Fuel vapor is hazardous. It can easily ignite, causing serious injury and damage. Always keep sparks and flames away from fuel.**
- **Fuel line spills and leakage are dangerous. Fuel can ignite and cause serious injuries or death and damage. Fuel can also irritate skin and eyes. To prevent this, always complete the following "Fuel Line Safety Procedure".**

Fuel Line Safety Procedure

Note

- Fuel in the fuel system is under high pressure also when the engine is not running.

1. Remove the fuel-filler cap and release the pressure in the fuel tank.
2. Remove the fuel pump relay.
3. Start the engine.
4. After the engine stalls, crank the engine several times.
5. Turn the ignition switch to LOCK position.
6. Install the fuel pump relay.

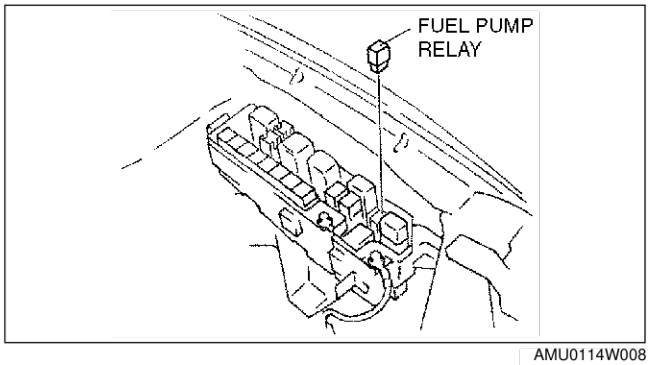

AMU0114W008

End Of Sie

AFTER REPAIR PROCEDURE

AME411201006W04

Warning

- **Fuel line spills and leakage are dangerous. Fuel can ignite and cause serious injuries or death and damage. When installing the fuel hose, observe "Fuel Leakage Inspection" described below.**

Fuel Leakage Inspection

Warning

- **Fuel line spills and leakage are dangerous. Fuel can ignite and cause serious injuries or death and damage. Always carry out the following procedure with the engine stopped.**

Caution

- **Connecting the wrong DLC terminal may possibly cause a malfunction. Carefully connect the specified terminal only.**

1. Short the DLC terminal F/P to body GND using a jumper wire.
2. Turn the ignition switch to ON position to operate the fuel pump.
3. Pressurize the system this way for **at least 5 minutes** to be sure of no leakage.
   - If there is fuel leakage, inspect the fuel hoses, hose clamps, and fuel pipe sealing surface, and replace as necessary.
4. After repair, assemble the system and repeat Steps 1 to 3.

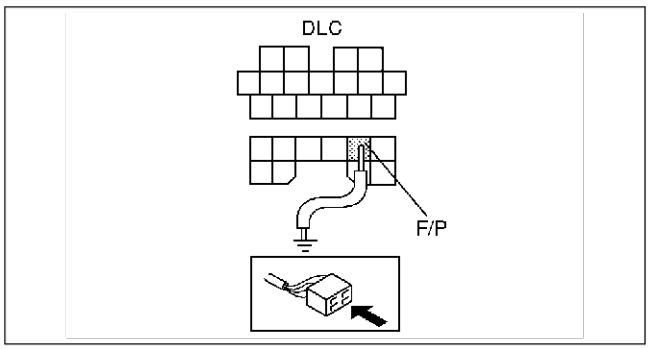

AME4212W019

End Of Sie

FUEL LINE PRESSURE INSPECTION

AME411201006W05

Warning

- **Fuel line spills and leakage are dangerous. Fuel can ignite and cause serious injuries or death. Fuel can also irritate skin and eyes. To prevent this, always complete the "BEFORE REPAIR PROCEDURE". (See F3–57 BEFORE REPAIR PROCEDURE.)**

Caution

- **Disconnecting/connecting the quick release connector without cleaning it may possibly cause damage to the fuel pipe and quick release connector. Always clean the quick release connector joint area before disconnecting/connecting using cloth or soft brush, and make sure that it is free of foreign material.**

1. Disconnect the negative battery cable.

Caution

- **The quick release connector may be damaged if the tab is turned too far. Do not turn the tab over the stopper.**

2. Disconnect the quick release connector from the fuel tank as follows:
   (1) Push the tab on the locking coupler **90 degrees** until it stops.
   (2) Pull the fuel hose straight back.

Note

- The stopper may be removed from the quick connector. Take care not to loose it.Reinstall it to the quick release connector before reconnecting the fuel line.

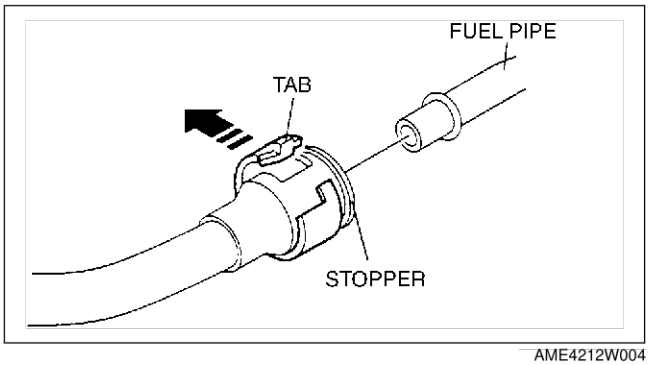

AME4212W004

- The locking coupler has two internal locking tabs which retain the pulsation damper pipe. Be sure that the tab on the locking coupler is rotated until it stops to release two internal locking tabs.

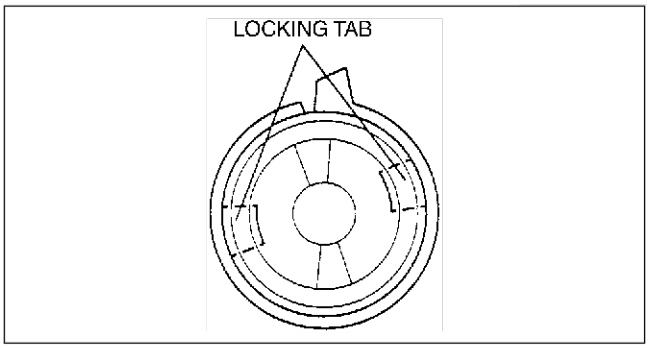

ZMU114WA2

3. Push the **SST** quick release connector into the fuel pipe and plastic fuel hose into the **SST** until a click is heard.
4. Turn the lever parallel to the hose of the **SST** as shown.
5. Connect the negative battery cable.
6. Verify that the selector lever is in N range or neutral.
7. Start the engine and let it idle. Measure the fuel line pressure.
   - If not as specified, inspect the following:
     Zero or low
     — FP circuit
     — FP
     — Fuel line (clogged)
     — Fuel leakage inside pressure regulator
     High
     — Pressure regulator for high pressure cause

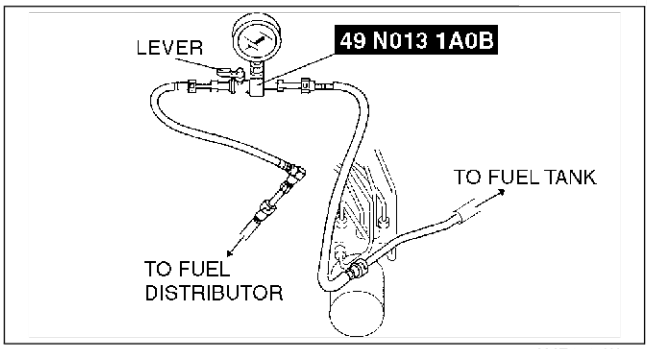

AME4212W003

Fuel line pressure
375—450 kPa {3.8—4.5 kgf/cm^2, 55—65 psi}

8. Observe the fuel pressure gauge indicator during heavy acceleration.
9. Verify that the fuel pressure fluctuation is within the specification during the test.
   - If not as specified, inspect the following:
     — PCM
     — FP
     — Pulsation damper
     — Fuel line for improper routing, kinks or leakage

Fuel pressure fluctuation
375—450 kPa {3.8—4.5 kgf/cm^2, 55—65 psi}

10. Turn the ignition switch to the LOCK position.
11. Measure the fuel hold pressure **after 5 min**.
    - If not as specified, inspect the following:
      — FP hold pressure
      — Fuel injector for leakage
      — Fuel line for improper routing, kinks or leakage

Fuel hold pressure
More than 200 kPa {2.03 kgf/cm^2, 29.0 psi}

12. Disconnect the **SST**.

Note
- A checker tab is integrated with quick release connector for new plastic fuel hoses. The checker tab will be released from the quick release connector after it is completely engaged with the fuel pipe.

13. Inspect the plastic fuel hose and fuel pipe sealing surface for damage and deformation, and replace as necessary.
    - If the quick release connector O-ring is damaged or has slipped, replace the plastic fuel hose.
14. Apply a small amount of clean engine oil to the sealing surface of the fuel pipe.
15. Reconnect the fuel main hose to the fuel distributor until a click is heard.
16. Lightly pull and push the quick release connector a few times by hand and verify that it can move **2.0—3.0 mm {0.08—0.11 in}** and it is connected securely.
    - If quick release connector does not move at all, verify that O-ring is not damaged and slipped, and reconnect the quick release connector.

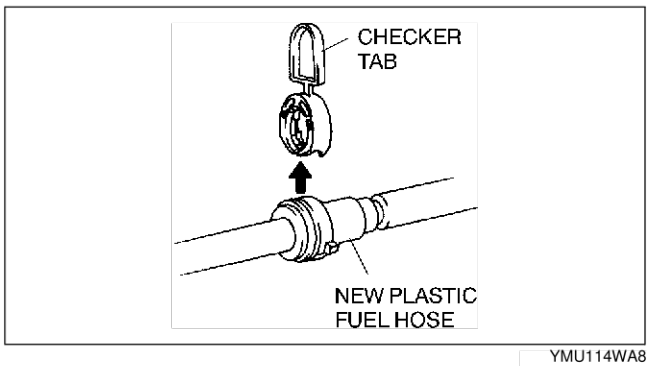

YMU114WA8

17. Complete the “AFTER REPAIR PROCEDURE”. (See F3–57 AFTER REPAIR PROCEDURE.)

End Of Sie

FUEL TANK REMOVAL/INSTALLATION

AME411242110W01

Warning
- **Repairing a fuel tank that has not been properly steam cleaned can be dangerous. Explosion or fire may cause death or serious injury. Always properly steam clean a fuel tank before repairing it.**
- **Fuel line spills and leakage are dangerous. Fuel can ignite and cause serious injuries or death and damage. Fuel can also irritate skin and eyes. To prevent this, do not damage the sealing surface of the fuel pump unit when removing or installing.**

Caution
- **Disconnecting/connecting the quick release connector without cleaning it may possibly cause damage to the fuel pipe and quick release connector. Always clean the quick release connector joint area before disconnecting/connecting using a cloth or soft brush, and make sure that it is free of foreign material.**

1. Level the vehicle.
2. Complete the “BEFORE REPAIR PROCEDURE”. (See F3–57 BEFORE REPAIR PROCEDURE.)
3. Disconnect the negative battery cable.
4. Remove the fuel pump unit. (See F3–62 FUEL PUMP UNIT REMOVAL/INSTALLATION.)
5. Siphon the fuel from the fuel tank.

6. Remove in the order indicated in the table.
7. Install in the reverse order of removal.
8. Complete the “AFTER REPAIR PROCEDURE”. (See F3–57 AFTER REPAIR PROCEDURE.)

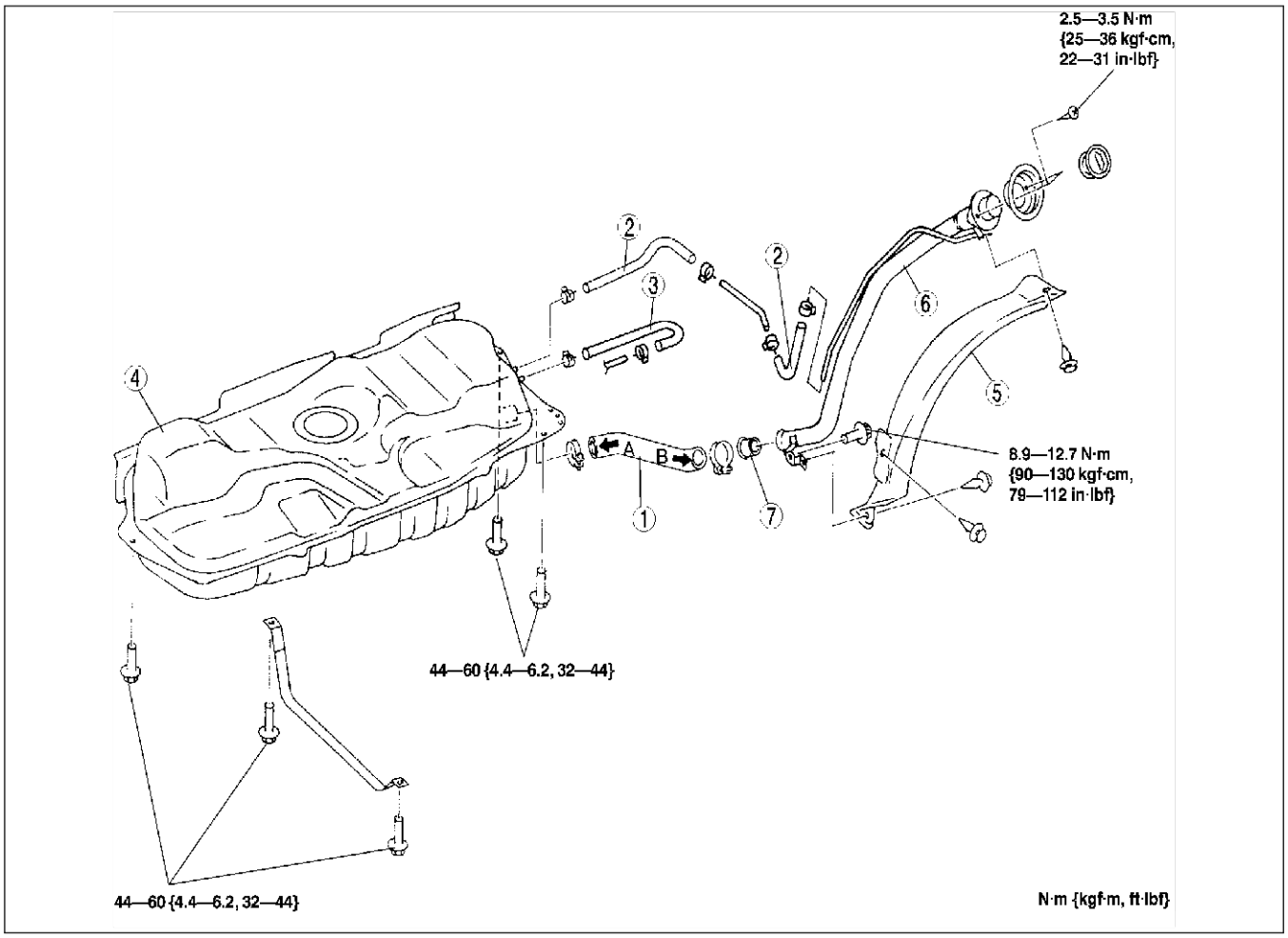

XME4012W003

1	Joint hose (See F3–61 Joint Hose Installation Note)
2	Breather hose (See F3–61 Breather Hose Installation Note)
3	Evaporative hose (See F3–60 Evaporative Hose Installation Note)

4	Fuel tank
5	Fuel-filler pipe protector
6	Fuel-filler pipe
7	Nonreturn valve

Evaporative Hose Installation Note

1. Fit evaporative hose onto the respective fittings, and install clamps as shown.

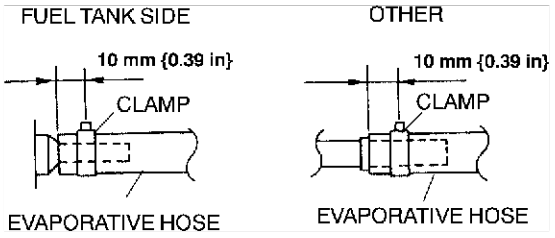

YMU114WAD

Breather Hose Installation Note

1. Fit the breather hose onto the respective fittings, and install clamps as shown.

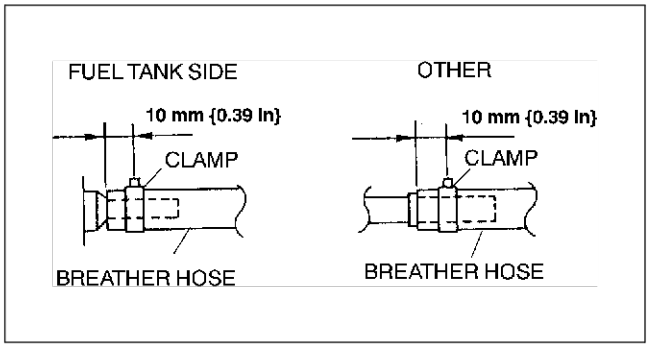

YMU114WAA

Joint Hose Installation Note

1. Fit the joint hose onto the respective fittings, and install clamps as shown.

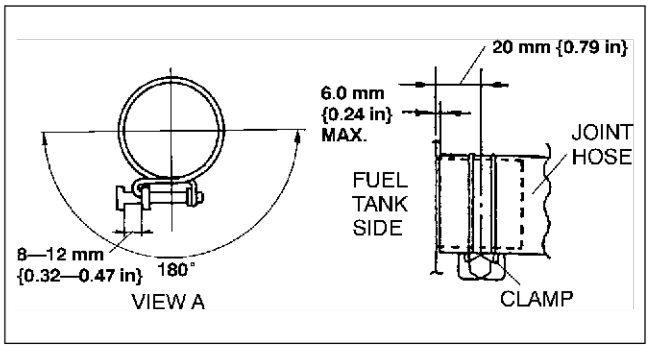

YMU114WAB

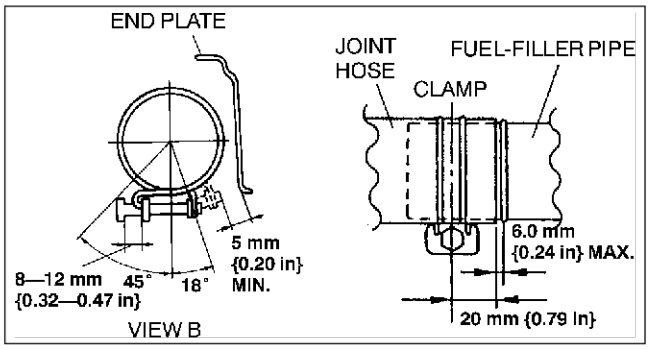

YMU114WAC

End Of Sie

FUEL TANK INSPECTION

AME411242110W02

Caution

- **Disconnecting/connecting the quick release connector without cleaning it may possibly cause damage to the fuel pipe and quick release connector. Always clean the quick release connector joint area before disconnecting/connecting using a cloth or soft brush, and make sure that it is free of foreign material.**

Note

- This inspection is for fuel shut-off valve and two rollover valves integrated in the fuel tank.

1. Disconnect the plastic fuel hose and the fuel pump unit connector. (See F3–62 FUEL PUMP UNIT REMOVAL/INSTALLATION.)
2. Remove the fuel tank with the fuel pump unit. (See F3–59 FUEL TANK REMOVAL/INSTALLATION.)

3. Plug the fuel pipe of the fuel pump unit.
4. Plug port C.
5. Level the fuel tank.
6. Blow through port B and verify that there is airflow from port A.
   - If there is no airflow, replace the fuel tank.

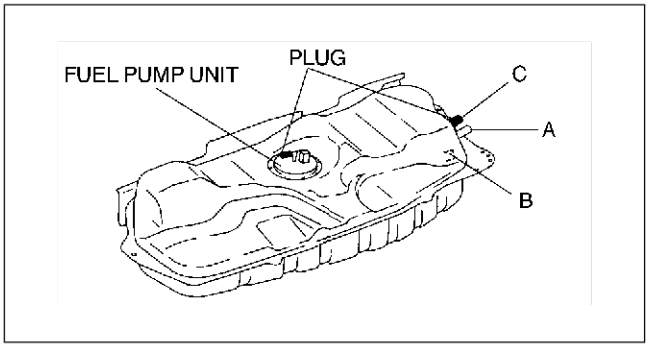

AME4212W005

   - If there is airflow, turn the fuel tank upside-down, and proceed to Step 7.
7. Blow through port B and verify that there is no airflow from port A.
   - If there is airflow, replace the fuel tank.

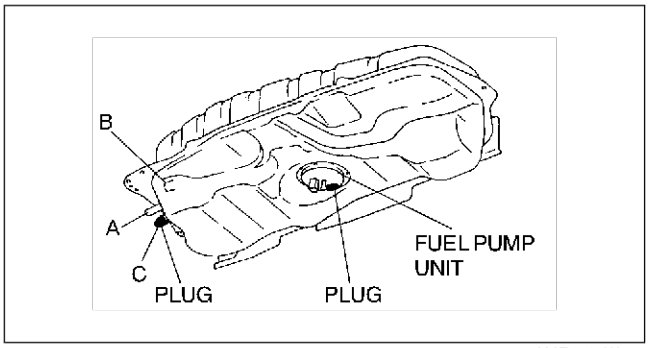

AME4212W006

End Of Sie

NONRETURN VALVE INSPECTION

AME411242270W01

1. Remove the nonreturn valve. (See F3–59 FUEL TANK REMOVAL/INSTALLATION.)
2. Verify that the nonreturn valve opens up to **90 degrees** when it is pushed from the fuel-filler pipe side, and it returns to the normal position by the spring force.
   - If the nonreturn valve does not open up to **90 degrees** or does not return to the normal position, replace the nonreturn valve.

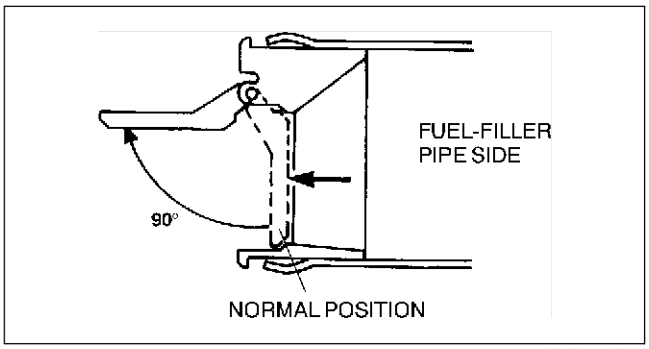

YMU114WAH

End Of Sie

FUEL PUMP UNIT REMOVAL/INSTALLATION

AME411213350W02

Warning

- **Fuel line spills and leakage are dangerous. Fuel can ignite and cause serious injuries or death and damage. Fuel can also irritate skin and eyes. To prevent this, do not damage the sealing surface of the fuel pump unit when removing or installing.**

Caution

- **Disconnecting/connecting the quick release connector without cleaning it may possibly cause damage to the fuel pipe and quick release connector. Always clean the quick release connector joint area before disconnecting/connecting using a cloth or soft brush, and make sure that it is free of foreign material.**

1. Complete the “BEFORE REPAIR PROCEDURE”. (See F3–57 BEFORE REPAIR PROCEDURE.)
2. Disconnect the negative battery cable.
3. Remove the front seats.
4. Remove the front scuff plates.
5. Remove the rear scuff plates.

6. Remove the console lower cover.
7. Loosen the parking brake lever installation bolts.
8. Partially peel back the floor covering until the service hole cover appears.
9. Remove in the order indicated in the table.

1	Service hole cover
2	Connector
3	Plastic fuel hose (See F3–63 Plastic Fuel Hose Removal Note) (See F3–64 Plastic Fuel Hose Installation Note)
4	Fuel pump unit

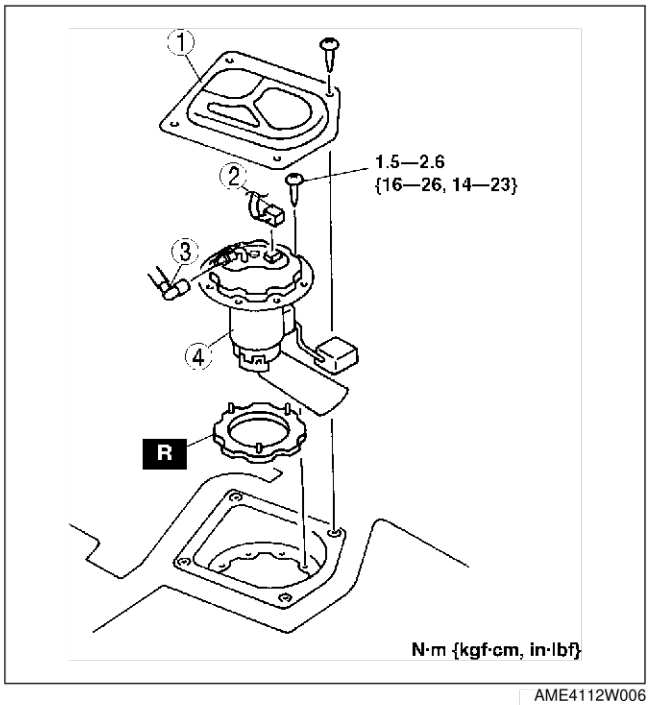

AME4112W006

10. Install in the reverse order of removal.
11. Complete the “AFTER REPAIR PROCEDURE”.
(See F3–57 AFTER REPAIR PROCEDURE.)

Plastic Fuel Hose Removal Note

Caution
- **The quick release connector may be damaged if the tab is bent excessively. Do not expand the tab over the stopper.**

1. Disconnect the quick release connector.
(1) Push the tab on the locking coupler **90 degrees** until it stops.
(2) Pull the fuel hose straight back.

Note
- The stopper may be removed from the quick connector. Take care not to lose it. Reinstall it to the quick release connector before reconnecting the fuel line.

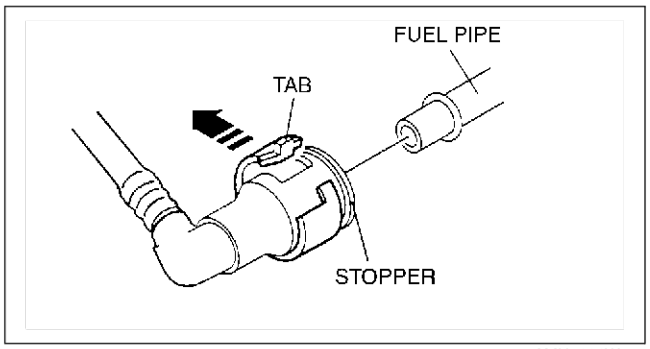

AMU0114W026

- The locking coupler has two internal locking tabs which retain the fuel pipe. Be sure that the tab on the locking coupler is rotated until it stops to release two internal locking tabs.

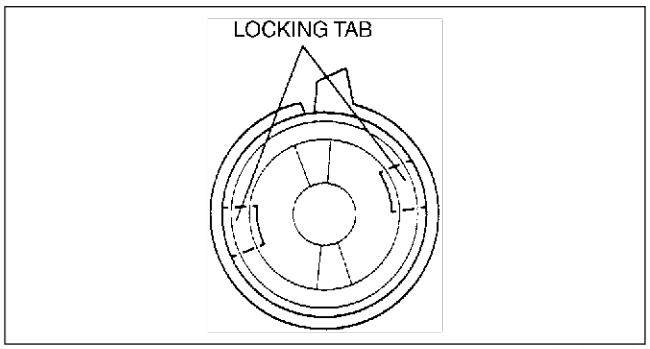

ZMU114WA2

F3

2. Cover the disconnected quick release connector and fuel pipe with vinyl sheets or the like to prevent them from being scratched or contaminated with foreign material.

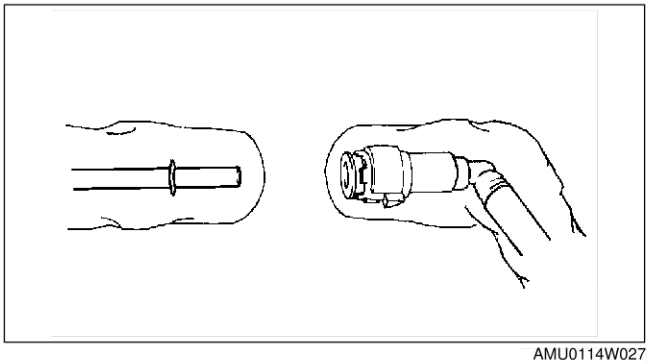

AMU0114W027

Plastic Fuel Hose Installation Note

Note
- A checker tab is integrated with quick release connector for new plastic fuel hoses. The checker tab will be released from the quick release connector after it is completely engaged with the fuel pipe.

1. When the retainer is not removed, perform the following procedure.
   (1) Inspect the fuel pump unit sealing surface for damage and deformation, and replace as necessary.
      - If the quick release connector O-ring is damaged, replace the plastic fuel hose.

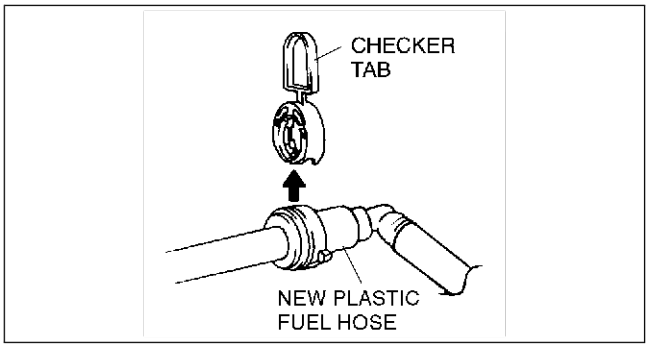

AMU0114W029

   (2) Slightly apply clean engine oil to the sealing surface of the fuel pump unit.
   (3) Align the fuel pipe on the fuel pump unit and quick release connector so that the tabs of the retainer are correctly fitted into the quick release connector. Push the quick release connector straight into the retainer until a click is heard.
   (4) Lightly pull and push the quick release connector a few times by hand and verify that it can move **2.0—3.0 mm {0.08—0.11 in}** and it is connected securely.
      - If quick release connector does not move at all, verify that O-ring is not damaged and slipped, and reconnect the quick release connector.

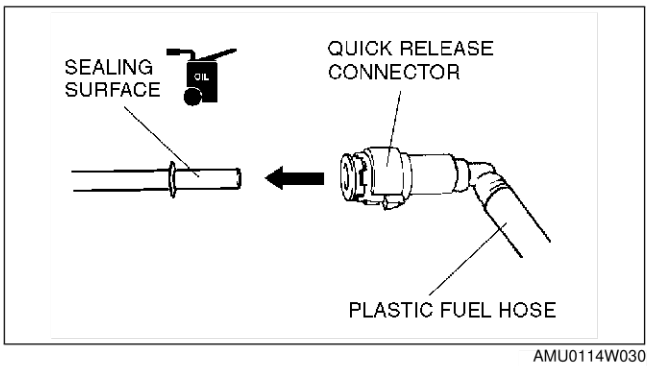

AMU0114W030

2. When the retainer is removed, perform the following procedure.

End Of Ste

FUEL PUMP UNIT DISASSEMBLY/ASSEMBLY

AME411213350W03

Warning

- **Fuel line spills and leakage are dangerous. Fuel can ignite and cause serious injuries or death and damage. Fuel can also irritate skin and eyes. To prevent this, do not damage the sealing surface of the fuel pump unit when removing or installing.**

1. Disassemble in the order indicated in the table.

1	Fuel pump unit cover
2	Fuel filter (high-pressure)
3	Spacer
4	Rubber mount
5	Fuel filter (low-pressure)
6	Fuel pump
7	Fuel gauge sender unit

2. Assemble in the reverse order of disassembly.

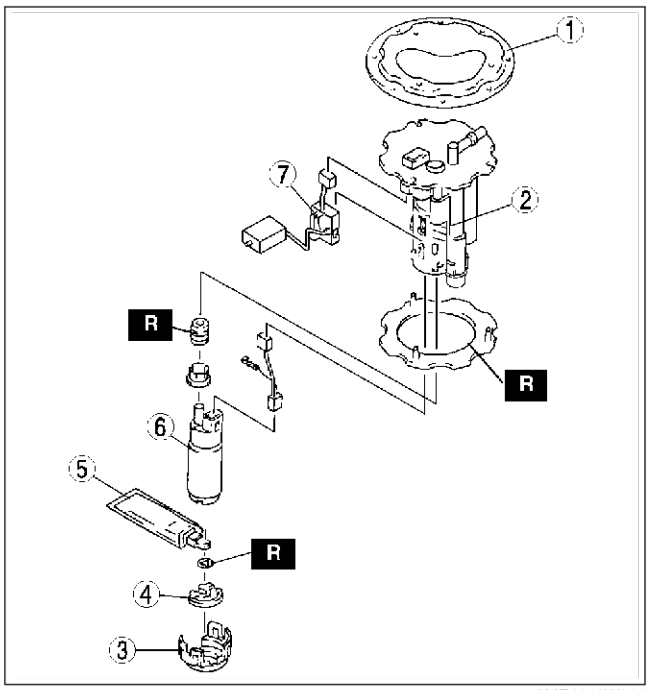

AME4112W016

End Of Ste

FUEL PUMP UNIT INSPECTION

AME411213350W04

Continuity Inspection

Note

- Perform the following inspection only when directed.

1. Disconnect the negative battery cable.
2. Remove the service hole cover. (See F3–62 FUEL PUMP UNIT REMOVAL/INSTALLATION.)
3. Disconnect the fuel pump unit connector.
4. Inspect for continuity between fuel pump unit connector terminals B and D.
   - If there is no continuity, replace the fuel pump body.
   - If as specified carry out the “Circuit Open/ Short Inspection”.

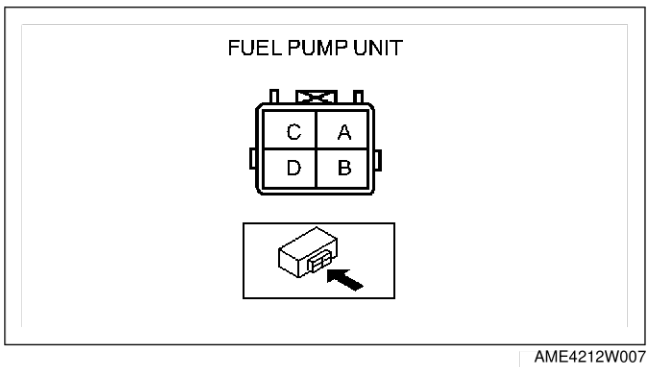

AME4212W007

Circuit Open/Short Inspection

1. Inspect the following wiring harnesses for open or short circuit (continuity check).

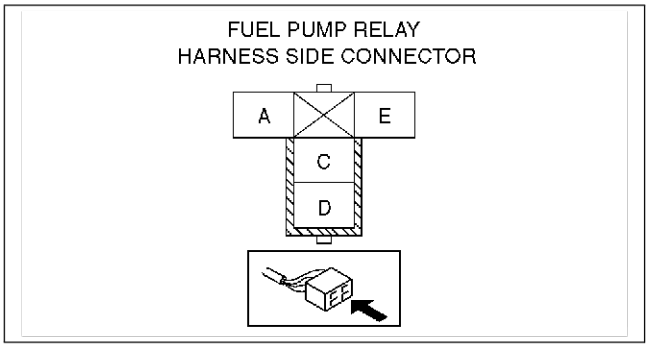

AME4212W008

Open circuit

- If there is no continuity, the circuit is open. Repair or replace the harness.
  - — Fuel pump unit terminal D (harness-side) and body GND.
  - — Fuel pump relay terminal D (harness-side) and fuel pump unit terminal B (harness-side).

Short circuit

- If there is continuity, the circuit is short. Repair or replace the harness.
  - — Fuel pump unit terminal D (harness-side) and power supply.
  - — Fuel pump unit terminal B (harness-side) and body GND.

Fuel Pump Maximum/Hold Pressure Inspection

Note

- The fuel pump maximum/hold pressure inspection can not be performed, as the pressure regulator has been built in the fuel pump unit. See the fuel line pressure inspection for fuel pressure inspection. (See F3–58 FUEL LINE PRESSURE INSPECTION.)

End Of Sie

FUEL FILTER (HIGH-PRESSURE) REMOVAL/INSTALLATION

AME411234801W01

1. Remove and install the fuel filter (high-pressure). (See F3–65 FUEL PUMP UNIT DISASSEMBLY/ASSEMBLY.)

End Of Sie

FUEL INJECTOR REMOVAL/INSTALLATION

AME411213250W01

Caution

- **Disconnecting/connecting the quick release connector without cleaning it may possibly cause damage to the fuel pipe and quick release connector. Always clean the quick release connector joint area before disconnecting/connecting using a cloth or soft brush, and make sure that it is free of foreign material.**

1. Complete the “BEFORE REPAIR PROCEDURE”. (See F3–57 BEFORE REPAIR PROCEDURE.)
2. Disconnect the negative battery cable.
3. Remove in the order indicated in the table.

1	Fuel injector connectors
2	Plastic fuel hose (See F3–67 Plastic Fuel Hose Removal Note) (See F3–69 Plastic Fuel Hose Installation Note)
3	Hose
4	Fuel distributor
5	Fuel injector (See F3–68 Fuel Injector Removal Note) (See F3–69 Fuel Injector Installation Note)
6	Snap ring
7	Pulsation damper

4. Install in the reverse order of removal.
5. Complete the “AFTER REPAIR PROCEDURE”. (See F3–57 AFTER REPAIR PROCEDURE.)

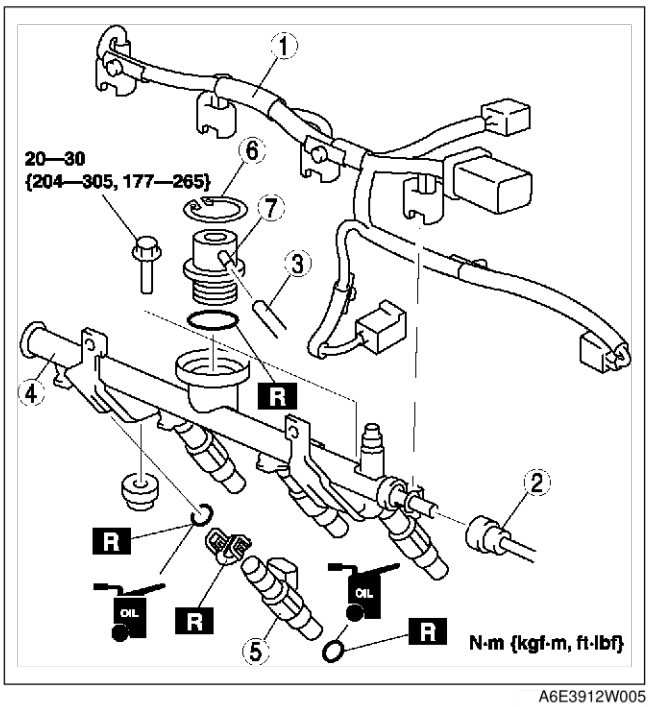

A6E3912W005

Plastic Fuel Hose Removal Note

Caution
- **The quick release connector may be damaged if the tab is bent excessively. Do not expand the tab over the stopper.**

1. Disconnect the quick release connector.
   (1) Push the tab on the locking coupler **90 degrees** until it stops.
   (2) Pull the fuel hose straight back.

Note
- The stopper may be removed from the quick connector. Take care not to lose it. Reinstall it to the quick release connector before reconnecting the fuel line.

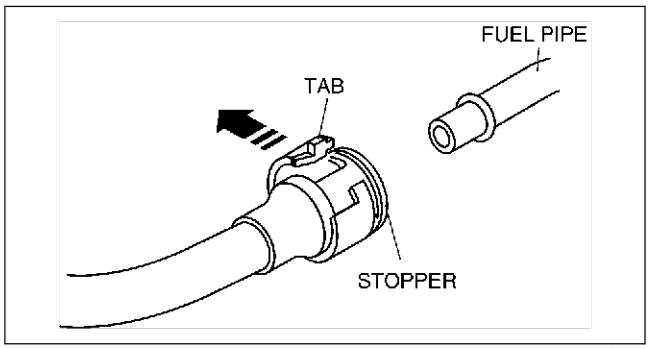

A6E3912W001

- The locking coupler has two internal locking tabs which retain the fuel pipe. Be sure that the tab on the locking coupler is rotated until it stops to release two internal locking tabs.

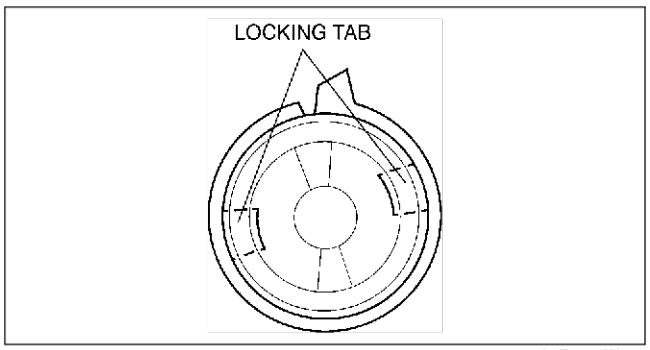

A6E3912W002

2. Cover the disconnected quick release connector and fuel pipe with vinyl sheets or the like to prevent them from being scratched or contaminated with foreign material.

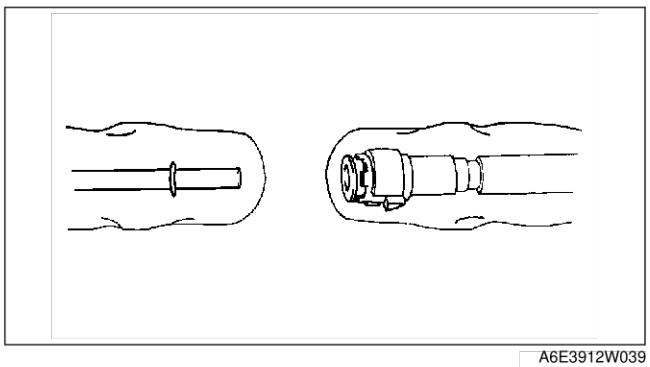
A6E3912W039

Fuel Injector Removal Note

Caution
- **Use of a deformed injector retaining clip will cause the injector to not engage correctly. Always use a new clip when reattaching the injector, otherwise it may cause the injector to rotate.**

1. Insert a screwdriver between the injector cup and the clip fingers.

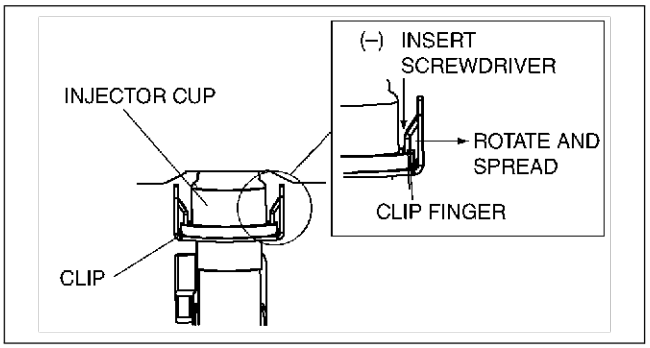

A6E3912W040

Note
- When rotating the screwdriver to spread the clip fingers, deform them sufficiently to make sure they release from the notched edge of the injector cup.

2. Rotate the screwdriver to spread the clip fingers and remove them from the injector cup.
3. Pull the injector and clip out of the rail.
4. Remove the clip from the injector according to the following:
   (1) Grasp the clip with a pair of pliers.
   (2) Pull the clip parallel to the injector groove, and remove it from the injector.
   (3) Discard the clip.

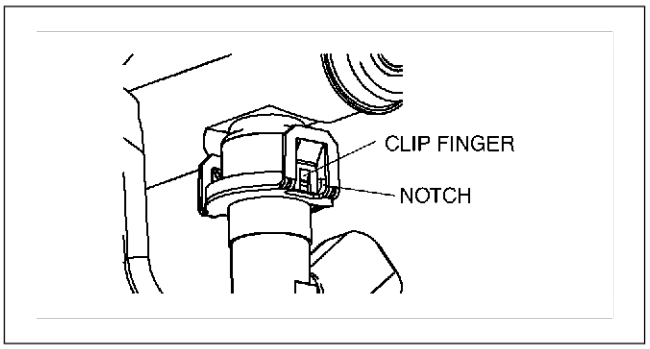

A6E3912W041

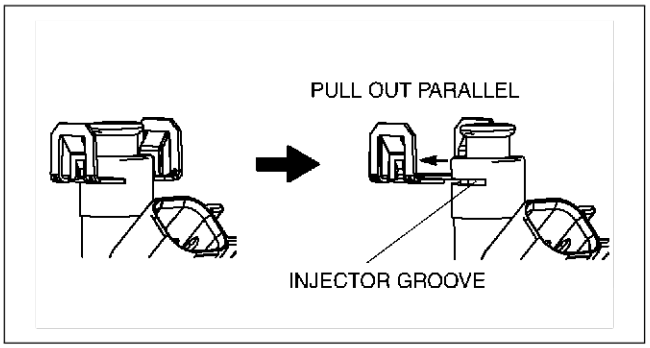

A6E3912W042

Fuel Injector Installation Note

1. Lightly lubricate the injector groove and O-ring.
2. Pre-attach a new clip in the injector groove.

Note

- When the clip is attached correctly, the central area of the injector and the clip finger positions are aligned.

3. Hold the injector firmly, push the clip into the injector until the clip stops sliding.
4. Verify that the injector connector position is correct, and press the injector and clip into the injector cup. Continue pressing until the clip contacts the lower surface of the injector cup.
5. Verify that the injector and clip are correctly attached with the clip locked onto the injector cup notch.

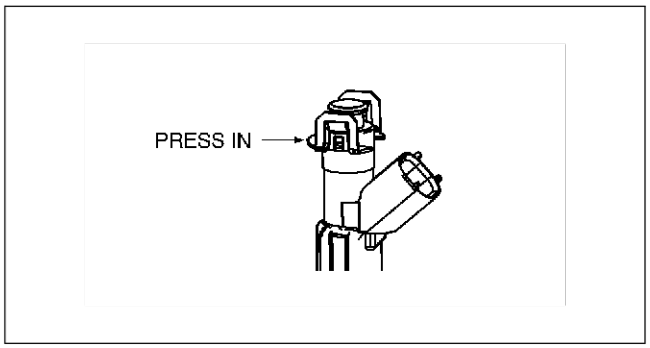

A6E3912W043

Plastic Fuel Hose Installation Note

Note

- A checker tab is integrated with quick release connector for new plastic fuel hoses. The checker tab will be released from the quick release connector after it is completely engaged with the fuel pipe.

1. When the retainer is not removed, perform the following procedure.
   (1) Inspect the fuel pump unit sealing surface for damage and deformation, and replace as necessary.
   - If the quick release connector O-ring is damaged, replace the plastic fuel hose.

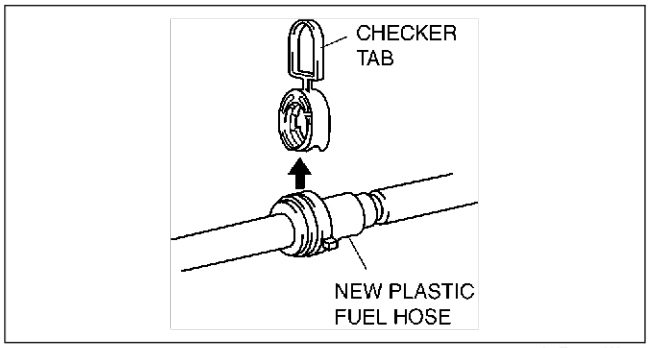

A6E3912W004

   (2) Slightly apply clean engine oil to the sealing surface of the fuel pump unit.
   (3) Align the fuel pipe on the fuel pump unit and quick release connector so that the tabs of the retainer are correctly fitted into the quick release connector. Push the quick release connector straight into the retainer until a click is heard.
   (4) Lightly pull and push the quick release connector a few times by hand and verify that it can move **2.0—3.0 mm {0.08—0.11 in}** and it is connected securely.
   - If quick release connector does not move at all, verify that O-ring is not damaged and slipped, and reconnect the quick release connector.

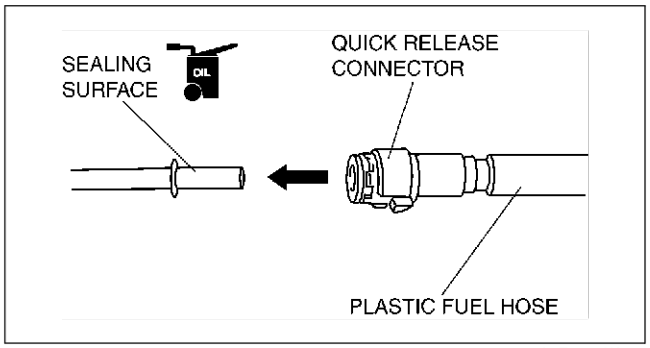

A6E3912W006

2. When the retainer is removed, perform the following procedure.

End Of Sta

FUEL INJECTOR INSPECTION

AME411213250W02

Operation Test

1. Carry out the “Fuel Injector Operation Inspection”. (See F3–274 Fuel Injector Operation Inspection.)
   - If not as specified, perform the further inspection for the fuel injectors.

Resistance Inspection

Note
- Perform the following test only when directed.

1. Turn the ignition switch to LOCK position.
2. Disconnect the negative battery cable.
3. Disconnect the fuel injector connectors.
4. Measure the resistance of the fuel injector using an ohmmeter.
   - If not as specified, replace the fuel injector. (See F3–66 FUEL INJECTOR REMOVAL/INSTALLATION.)
   - If as specified but “Operation Test” is failed, carry out the “Circuit Open/Short Inspection”. Inspect for open or short circuit.

Resistance
11.4—12.6 ohms [20 °C {68 °F}]

Circuit Open/Short Inspection

1. Disconnect the PCM connector. (See F3–81 PCM REMOVAL/INSTALLATION.)
2. Inspect the following wiring harness for open or short (continuity check).

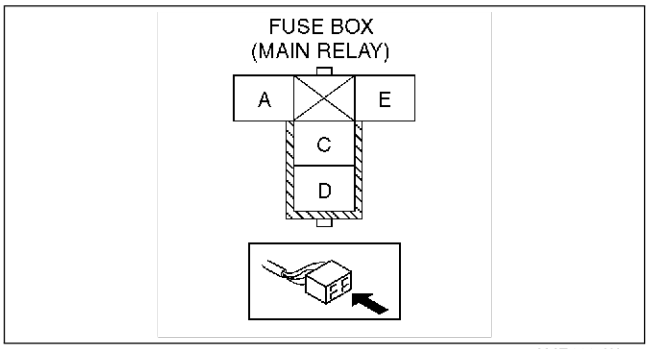

AME4112W008

Open circuit
- If there is no continuity, the circuit is open. Repair or replace the harness.
  - — No.1 cylinder fuel injector terminal B (harness-side) and PCM terminal 4Z.
  - — No.2 cylinder fuel injector terminal B (harness-side) and PCM terminal 4W.
  - — No.3 cylinder fuel injector terminal B (harness-side) and PCM terminal 4AD.
  - — No.4 cylinder fuel injector terminal B (harness-side) and PCM terminal 4AA.
  - — No.1 cylinder fuel injector terminal A (harness-side) and main relay (harness-side) terminal D through common connector.
  - — No.2 cylinder fuel injector terminal A (harness-side) and main relay (harness-side) terminal D through common connector.
  - — No.3 cylinder fuel injector terminal A (harness-side) and main relay (harness-side) terminal D through common connector.
  - — No.4 cylinder fuel injector terminal A (harness-side) and main relay (harness-side) terminal D through common connector.

Short circuit
- If there is continuity, the circuit is short. Repair or replace the harness.
  - — No.1 cylinder fuel injector terminal B (harness-side) and body GND.
  - — No.2 cylinder fuel injector terminal B (harness-side) and body GND.
  - — No.3 cylinder fuel injector terminal B (harness-side) and body GND.
  - — No.4 cylinder fuel injector terminal B (harness-side) and body GND.
  - — No.1 cylinder fuel injector terminal A (harness-side) and power supply.
  - — No.2 cylinder fuel injector terminal A (harness-side) and power supply.
  - — No.3 cylinder fuel injector terminal A (harness-side) and power supply.
  - — No.4 cylinder fuel injector terminal A (harness-side) and power supply.

Fuel Leakage Inspection

Warning

- **Fuel line spills and leakage are dangerous. Fuel can ignite and cause serious injuries or death and damage. Always carry out the following procedure with the engine stopped.**

Note

- Perform the following test only when directed.

1. Complete the “BEFORE REPAIR PROCEDURE”. (See F3–57 BEFORE REPAIR PROCEDURE.)
2. Disconnect the negative battery cable.
3. Remove the fuel injectors together with the fuel distributor with the fuel hose connected. (See F3–66 FUEL INJECTOR REMOVAL/INSTALLATION.)
4. Fasten the fuel injectors firmly to the fuel distributor with wire.
5. Connect the negative battery cable.

Caution

- **Connecting the wrong DLC terminal may possibly cause a malfunction. Carefully connect the specified terminal only.**

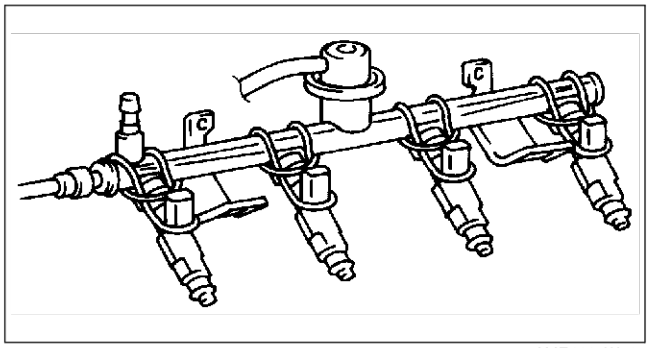

AME4112W010

6. Short the DLC terminal F/P to body GND using a jumper wire.
7. Turn the ignition switch to ON position to operate the fuel pump.

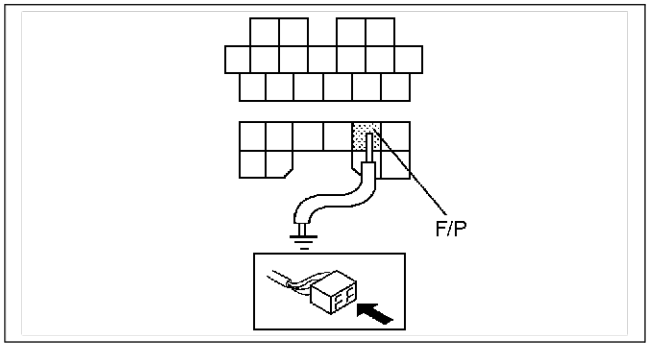

AME4112W007

8. Tilt the fuel injectors **approx. 60 degrees.**
9. Verify that fuel leakage from the fuel injector nozzles is within the specification.
   - If not as specified, replace the fuel injector.

Fuel leakage
Less than 1 drop/2 minutes

10. Turn the ignition switch to LOCK position and remove the jumper wire.
11. Complete the “AFTER REPAIR PROCEDURE”. (See F3–57 AFTER REPAIR PROCEDURE.)

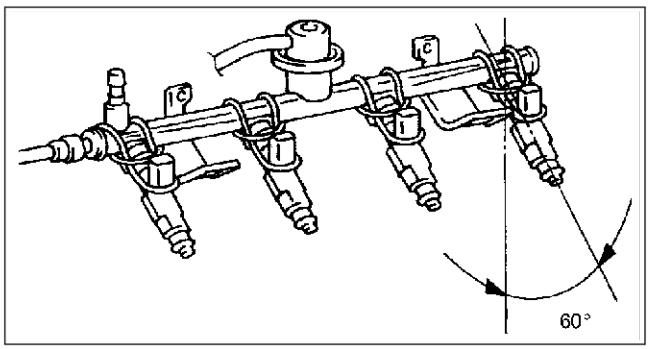

AME4112W009

Volume Inspection

Warning
- **Fuel line spills and leakage are dangerous. Fuel can ignite and cause serious injuries or death and damage. Always carry out the following procedure with the engine stopped.**

Note
- If there is an after market fuel injector tester, perform the following test.
- If there is no an after market fuel injector tester, perform “Operation Test”, “Resistance Inspection”, and “Fuel Leakage Test” to verify the fuel injector is okay or not.

1. Complete the “BEFORE REPAIR PROCEDURE”. (See F3–57 BEFORE REPAIR PROCEDURE.)
2. Disconnect the negative battery cable.
3. Remove the fuel injectors. (See F3–66 FUEL INJECTOR REMOVAL/INSTALLATION.)
4. Connect the fuel injector to the fuel injector tester.
5. Measure the injection volume of each fuel injector using a graduated container.
   - If not as specified, replace the fuel injector.

Injection volume
61—71 ml {61—71 cc, 2.2—2.7 fl oz}/15 sec.

6. Turn the ignition switch to LOCK position and disconnect the jumper wire.
7. Complete the “AFTER REPAIR PROCEDURE”. (See F3–57 AFTER REPAIR PROCEDURE.)

Atomization

1. Inspect atomization pattern.
   - If the atomization is faulty, replace the fuel injector.

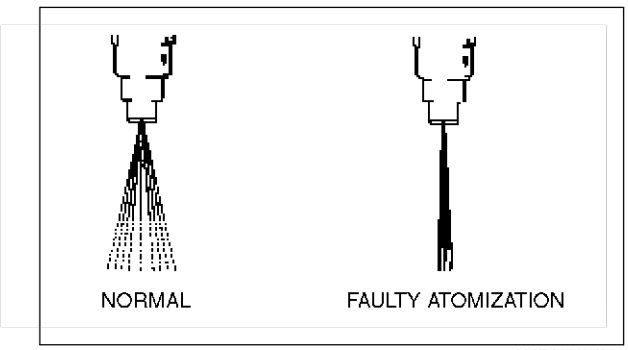

AME4112W005

End Of Sie

PRESSURE REGULATOR INSPECTION

AME411213280W01

Note
- Due to the adoption of the mechanical returnelss fuel system, the pressure regulator cannot be inspected separately.

1. Perform “FUEL LINE PRESSURE INSPECTION”. (See F3–58 FUEL LINE PRESSURE INSPECTION.)

End Of Sie

PULSATION DAMPER REMOVAL/INSTALLATION

AME411220180W01

1. Complete the “BEFORE REPAIR PROCEDURE”. (See F3–57 BEFORE REPAIR PROCEDURE.)
2. Remove and install the pulsation damper.(See F3–66 FUEL INJECTOR REMOVAL/INSTALLATION.)
3. Complete the “AFTER REPAIR PROCEDURE”. (See F3–57 AFTER REPAIR PROCEDURE.)

End Of Sie

PULSATION DAMPER INSPECTION

AME411220180W02

1. Complete the “BEFORE REPAIR PROCEDURE”. (See F3–57 BEFORE REPAIR PROCEDURE.)
2. Remove the pulsation damper. (See F3–72 PULSATION DAMPER REMOVAL/INSTALLATION.)
3. Visually inspect the pulsation damper for damage and cracks. Also verify that there is no extreme rust which will cause fuel leakage.
   - If either is observed, replace the pulsation damper.
4. Complete the “AFTER REPAIR PROCEDURE”. (See F3–57 AFTER REPAIR PROCEDURE.)

End Of Sie

EXHAUST SYSTEM

EXHAUST SYSTEM INSPECTION

AME411440000W03

1. Start the engine and inspect each exhaust system component for exhaust gas leakage.
   - If leakage is found, repair or replace as necessary.

End Of Sub

EXHAUST SYSTEM REMOVAL/INSTALLATION

AME411440000W04

Warning

- **When the engine and exhaust system are hot, they can badly burn. Turn off the engine and wait until they are cool before removing the exhaust system.**

1. Disconnect the negative battery cable.
2. Remove in the order indicated in the table.
3. Install in the reverse order of removal.

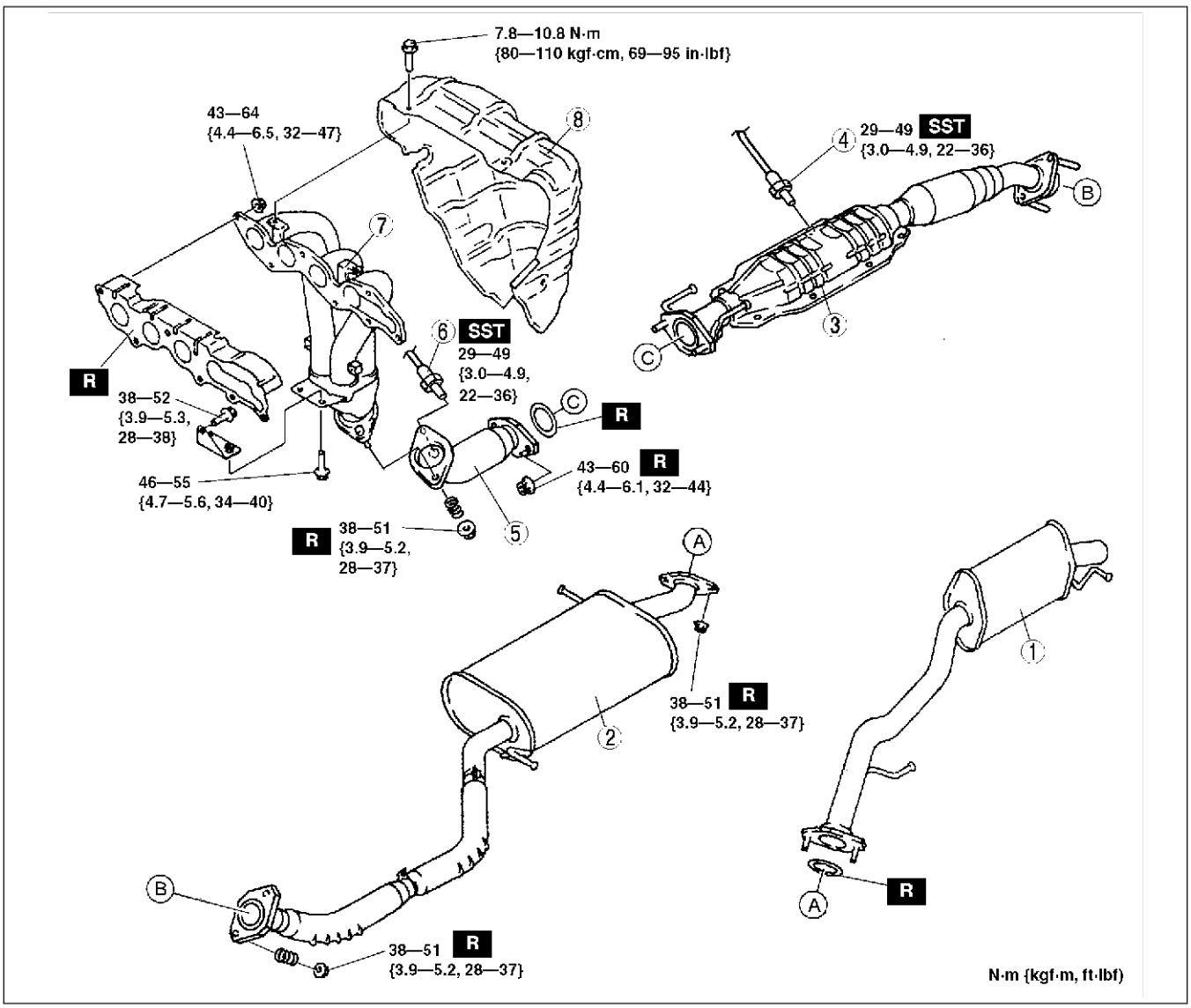

AME4114W001

1	After silencer
2	Main silencer
3	TWC
4	HO2S (rear) (See F3–74 HO2S Removal Note)
5	Front pipe (See F3–74 Front Pipe Removal Note)

6	HO2S (front) (See F3–74 HO2S Removal Note)
7	Exhaust manifold (See F3–74 Exhaust Manifold Removal Note) (See F3–74 Exhaust Manifold Installation Note)
8	Exhaust manifold insulator (See F3–74 Exhaust Manifold Removal Note)

HO2S Removal Note

1. Remove the HO2S using the **SST** before removing the exhaust manifold.

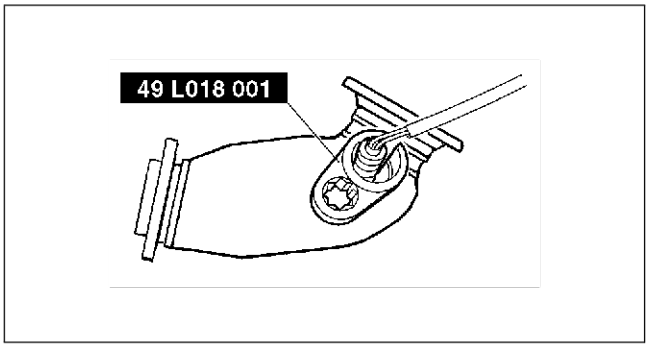

AME4114W003

Front Pipe Removal Note

1. Remove the transverse member before removing the front pipe.

Exhaust Manifold Removal Note

1. Dis connect the generator, but do not remove it from the vehicle. After desconnection, fix the generator using a rope to prevent it from falling. (SeeG–11 GENERATOR REMOVAL/INSTALLATION.)
2. Remove the exhaust manifold.
   (1) Remove the exhaust manifold insulator mounting bolts.
   (2) Remove the exhaust manifold.
   (3) Remove the exhaust manifold insulator.

Exhaust Manifold Installation Note

1. Tighten the exhaust manifold installation nuts in the order shown.

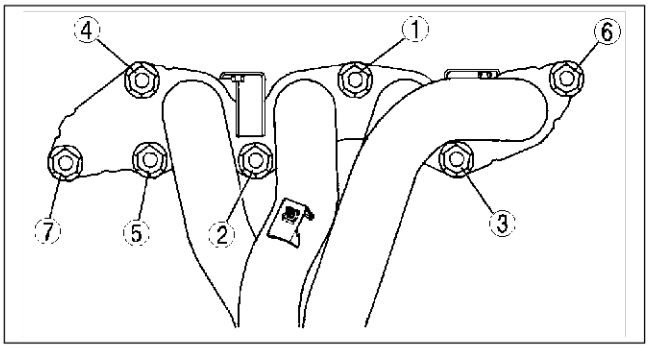

AME4114W002

End Of Sie

EMISSION SYSTEM

EVAPORATIVE GAS CHECK VALVE (ONE-WAY) INSPECTION

AME411613988W01

1. Remove the evaporative gas check valve (one-way).
2. Apply pressure to port A, and verify that there is no airflow.
   - If there is airflow, replace the evaporative gas check valve (one-way).
3. Apply negative pressure to port A, and verify that there is air flow.
   - If there is no airflow, replace the evaporative gas check valve (one-way).

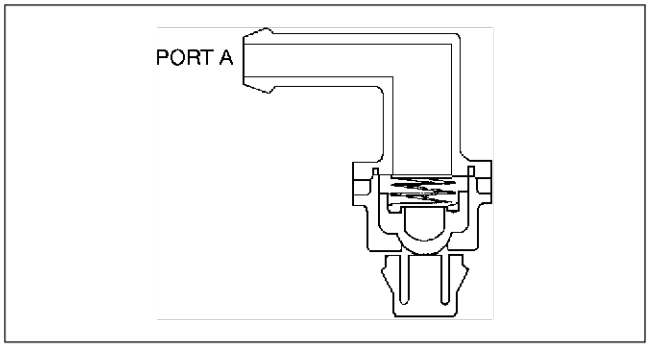

XME4016W005

End Of Sta

CHARCOAL CANISTER REMOVAL/INSTALLATION

AME411613970W01

1. Lift up the vehicle.
2. Remove in the order indicated in the table.

1	Evaporative hose
2	Charcoal canister protector
3	Charcoal canister

3. Install in the reverse order of removal.

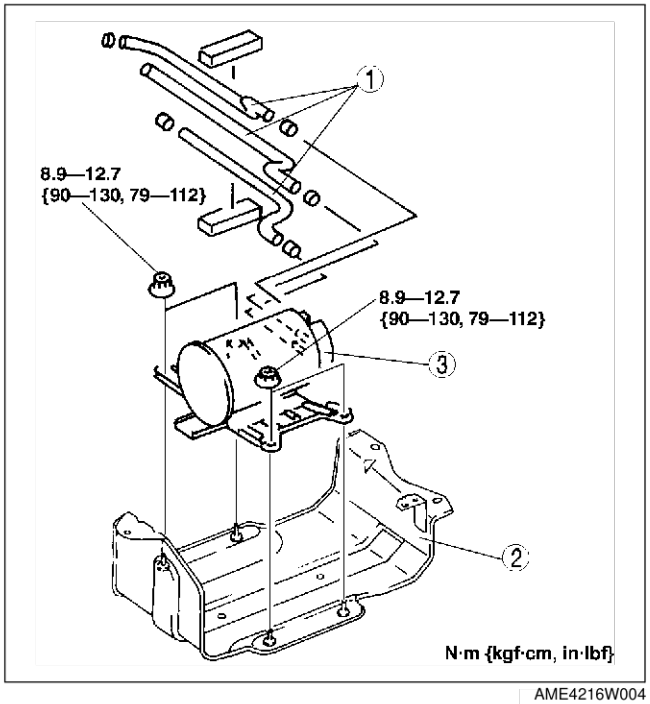

AME4216W004

End Of Sta

CHARCOAL CANISTER INSPECTION

AME411613970W02

1. Remove the charcoal canister.
2. Plug the atmosphere side port and purge solenoid valve side port of the charcoal canister.
3. Blow air into the charcoal canister from the fuel tank side port and verify that there is no air leakage.
   - If there is air leakage, replace the charcoal canister.

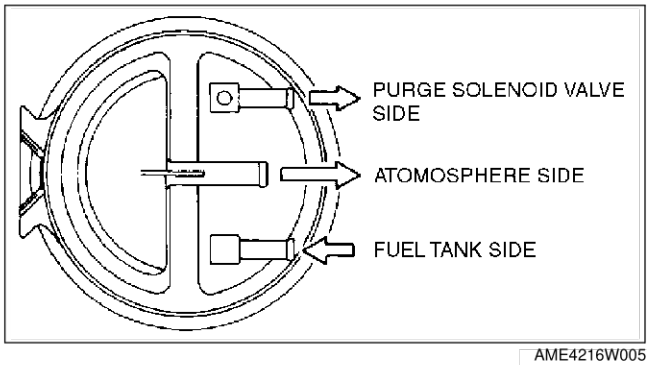

AME4216W005

End Of Sta

CATCH TANK INSPECTION

AME411618743W01

1. Remove the air cleaner.
2. Plug the purge solenoid valve side port of the catch tank.
3. Blow from the charcoal canister side port and verify that there is no air leakage from the case.
   - If not as specified, replace the catch tank.

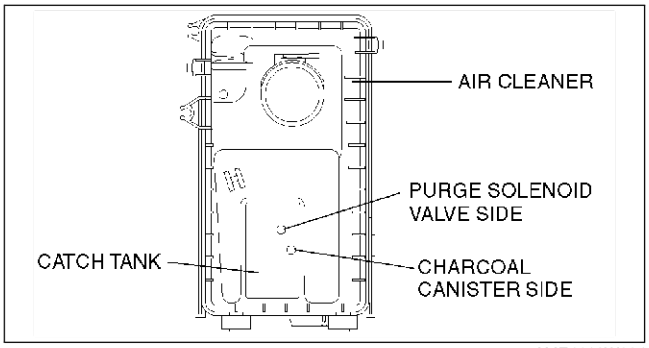

AME4116W004

End Of Sie

PURGE SOLENOID VALVE REMOVAL/INSTALLATION

AME411618740W01

1. Disconnect the negative battery cable.
2. Remove in the order indicated in the table.

1	Evaporative hose (to catch tank) (See F3–76 Vacuum/Evaporative Hose Installation Note)
2	Vacuum hose (to intake manifold) (See F3–76 Vacuum/Evaporative Hose Installation Note)
3	Purge solenoid valve

3. Install in the reverse order of removal.

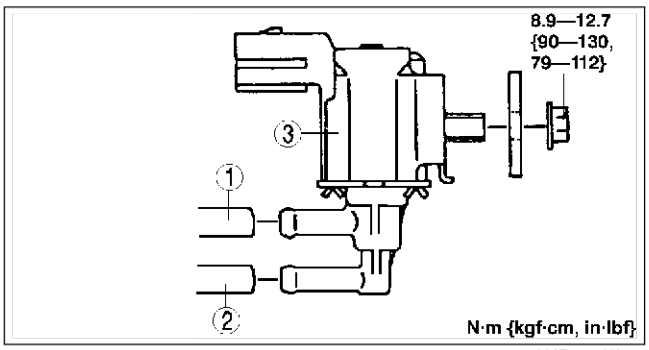

AME4216W006

Vacuum/Evaporative Hose Installation Note

1. Fit the vacuum hose (purge solenoid valve) onto the respective fittings, and install clamps as shown.

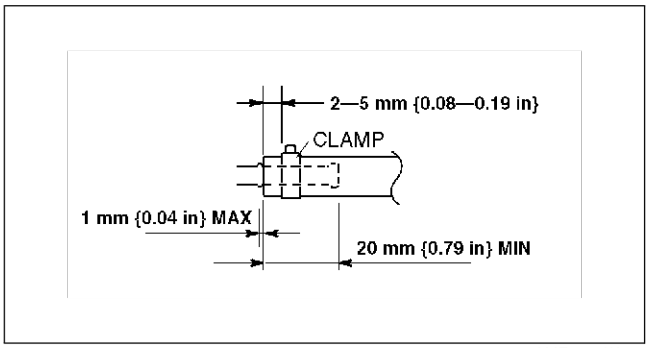

AME4110W015

PURGE SOLENOID VALVE INSPECTION

AME411618740W02

Airflow Inspection

Note
- Perform the following test only when directed.

1. Disconnect the negative battery cable.
2. Remove the purge solenoid valve. (See F3–76 PURGE SOLENOID VALVE REMOVAL/INSTALLATION.)

3. Inspect airflow between the ports under the following conditions.
   - If not as specified, replace the purge solenoid valve.
   - If as specified, carry out the “Circuit Open/ Short Inspection”.

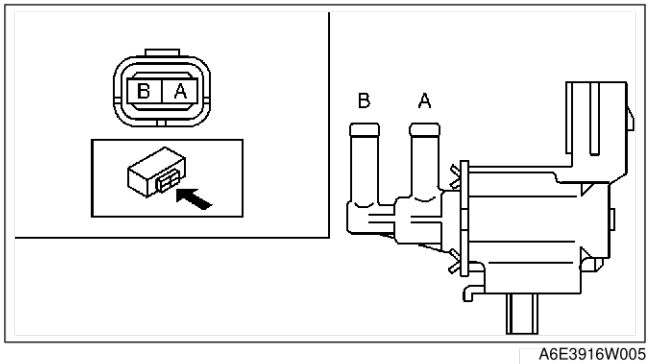

A6E3916W005

: Continuity : Airflow

Step	Terminal		Port	
	A	B	A	B
1	○——○			
2	B+	GND	○——○	

A6E3916W004

Circuit Open/Short Inspection

1. Disconnect the PCM connector. (See F3–81 PCM REMOVAL/INSTALLATION.)
2. Inspect the following wiring harness for open or short (continuity check).

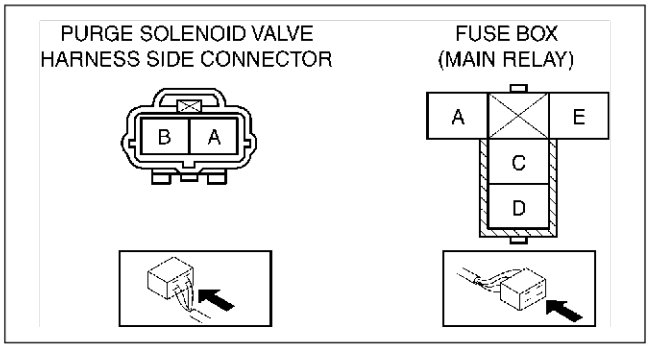

A6E3916W006

Open circuit
- If there is no continuity, the circuit is open. Repair or replace the harness.
  - — Purge solenoid valve terminal A (harness-side) and PCM terminal 4U
  - — Purge solenoid valve terminal B (harness-side) and main relay terminal C (harness-side)

Short circuit
- If there is continuity, the circuit is shorted. Repair or replace the harness.
  - — Purge solenoid valve terminal A (harness-side) and body GND
  - — Purge solenoid valve terminal B (harness-side) and power supply

End Of Ste

EGR VALVE REMOVAL/INSTALLATION

AME411620300W01

1. Disconnect the negative battery cable.
2. Disconnect the EGR valve connector.
3. Remove in the order indicated in the table.

1	Water hose (See F3–77 Water Hose Removal Note)
2	EGR valve (See F3–77 EGR Valve Removal Note)

4. Install in the reverse order of removal.

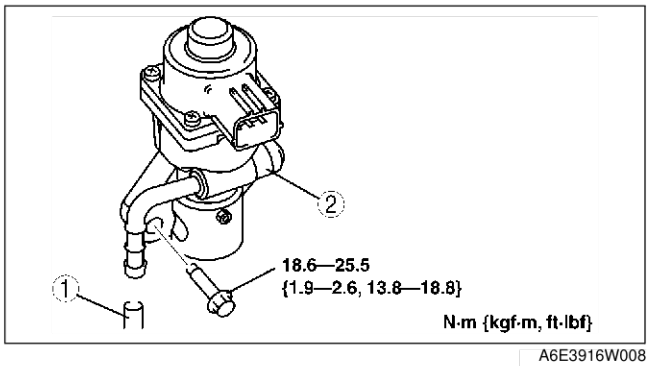

A6E3916W008

Water Hose Removal Note
- Drain the engine coolant. (See E–10 ENGINE COOLANT REPLACEMENT.)

EGR Valve Removal Note
1. Remove the air hose. (See F3–50 INTAKE-AIR SYSTEM REMOVAL/INSTALLATION)
2. Remove the upper radiator hose. (See E–13 RADIATOR REMOVAL/INSTALLATION.)

End Of Ste

EGR VALVE INSPECTION

AME411620300W02

Operation Test

1. Carry out the “EGR Control Inspection”. (See F3–275 EGR Control System Inspection.
   - If not as specified, perform the further inspection for the EGR valve.

Resistance Inspection

Note
- Perform the following test only when directed.

1. Disconnect the negative battery cable.
2. Inspect resistance of the EGR valve coils.
   - If not as specified, replace the EGR valve.
   - If as specified, carry out the “Circuit Open/ Short Inspection”.

Terminals	Resistance (ohms)
C—E C—A D—B D—F	12—16

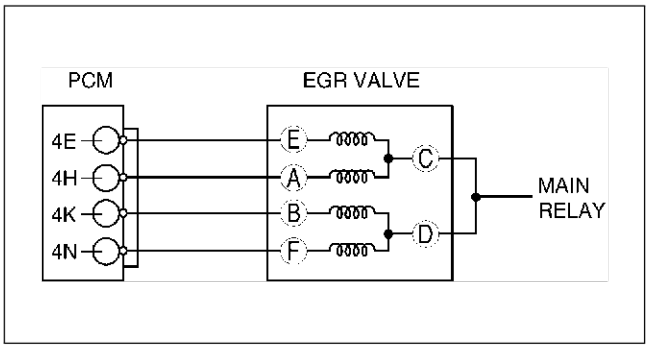

A6E3916W009

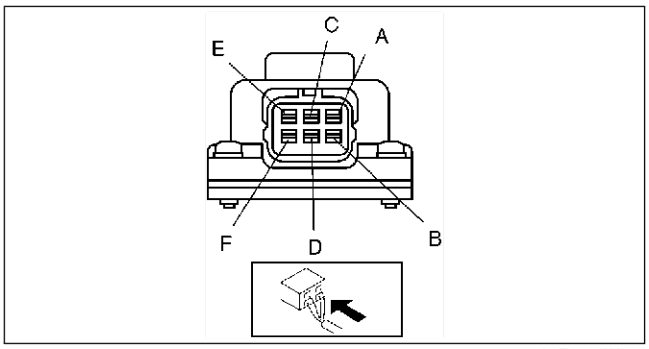

A6E3916W011

Circuit Open/Short Inspection

1. Disconnect the PCM connector. (See F3–81 PCM REMOVAL/INSTALLATION.)
2. Inspect the following wiring harness for open or short (continuity check).

   Open circuit
   - If there is no continuity, the circuit is open. Repair or replace the harness.
     - — EGR valve terminal E (harness-side) and PCM terminal 4E
     - — EGR valve terminal A (harness-side) and PCM terminal 4H
     - — EGR valve terminal B (harness-side) and PCM terminal 4K
     - — EGR valve terminal F (harness-side) and PCM terminal 4N
     - — EGR valve terminal C or D (harness-side) and main relay terminal C (harness-side)

   Short circuit
   - If there is continuity, the circuit is shorted. Repair or replace the harness.
     - — EGR valve terminal E (harness-side) and GND
     - — EGR valve terminal A (harness-side) and GND
     - — EGR valve terminal B (harness-side) and GND
     - — EGR valve terminal F (harness-side) and GND
     - — EGR valve terminal C or D (harness-side) and power supply
3. Remove the EGR valve, and inspect for any damage or clogging.
   - If there is no damage or no clogging, replace the EGR valve.

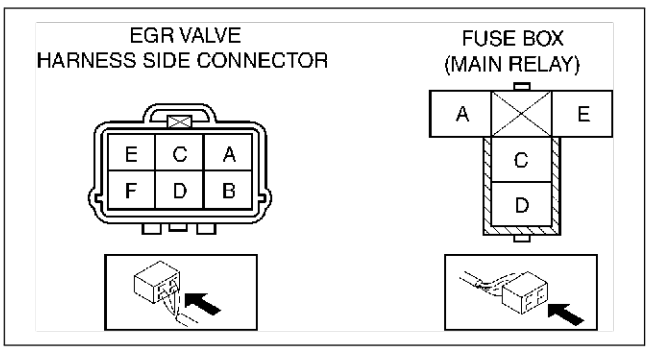

A6E3916W010

End Of Ste

PCV VALVE INSPECTION

AME411613890W01

1. Disconnect the negative battery cable.
2. Remove the intake manifold.(see F3–50 INTAKE-AIR SYSTEM REMOVAL/INSTALLATION.)
3. Remove the PCV valve.
4. Blow through the valve and verify that air flows as specified.
   - If not as specified, replace the PCV valve.

Specification

Condition	Airflow
Air applied from port A to B	Yes
Air applied from port B to A	No

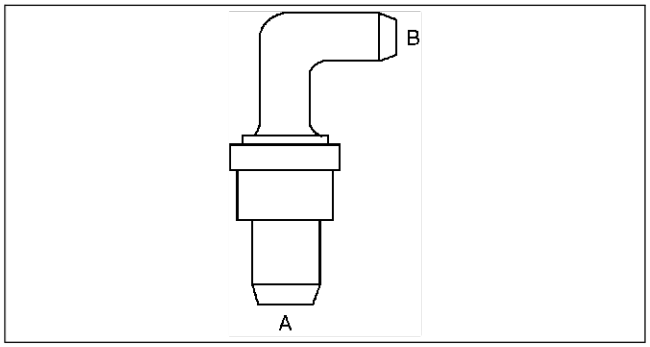

A6E3916W007

End Of Ste

THREE-WAY CATALYTIC CONVERTER (TWC) INSPECTION

AME411620500W01

F3

Note
- Make sure that no HO2S DTCs have been detected. If detected, this inspection is not applicable for TWC inspection.

1. Connect the WDS or equivalent and monitor PIDs as following.
   - Monitor the right TWC using O2S11 PID for upstream HO2S and O2S12 PID for downstream HO2S.
2. Begin to monitor the appropriate PIDs.
3. Drive the vehicle for **10 min** at **65—96 km/h {40—60 mph}** to allow the front catalytic converter to reach operating temperature.
4. Stop the vehicle and leave it in a safe place.
5. Let the engine idle.
6. Record PIDs for **1 min**.
7. Select the appropriate PIDs and read the graph.
8. Count the number of times (inversions) that the upstream HO2S graph line actually crosses the **0.5 V** line.
9. Count the number of times (inversions) that the downstream HO2S graph line actually crosses the **0.5 V** line.

Note
- Do not count the number of peaks. Refer to the graph.

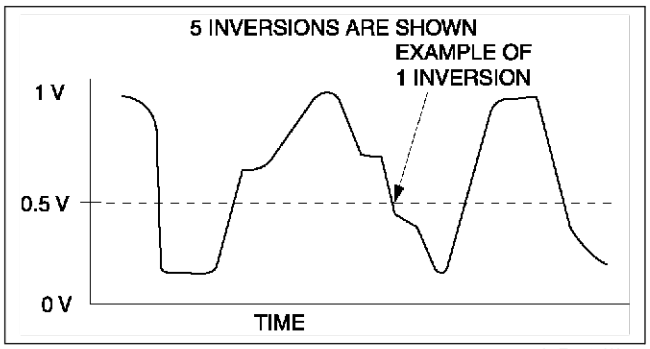

A6E3916W013

10. Using the following equation, calculate the value of ratio.

Equation
RATIO = Upstream HO2S inversion ÷ downstream HO2S inversion

- If the ratio is **5.5** or more or there is no downstream HO2S inversion, the TWC is functioning properly.
- If the ratio is **less than 1.125**, the TWC is not functioning properly. Replace the TWC.

Upstream HO2S graph line example

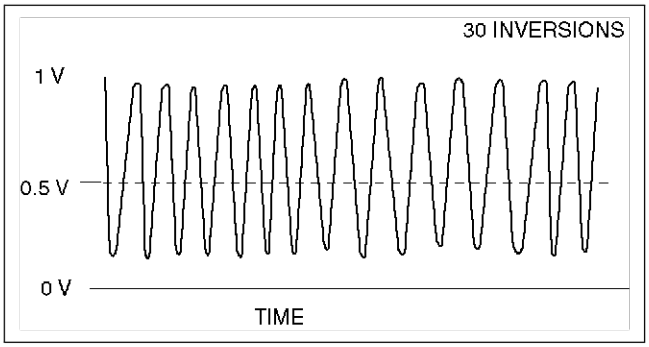

A6E3916W021

Downstream HO2S graph line example 1

Equation
RATIO = 30 inversions (upstream HO2S inversions) ÷ 5 inversions (downstream HO2S inversions) = 6.0 (good WU-TWC)

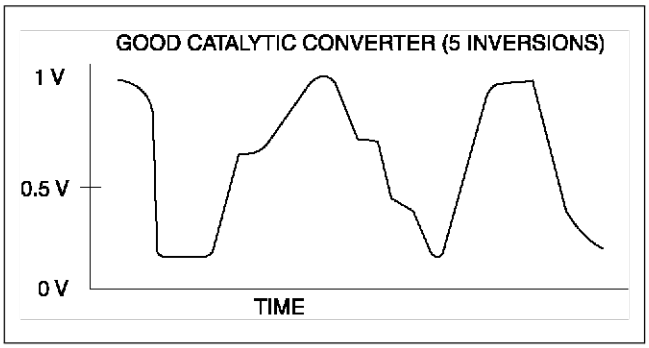

A6E3916W012

Downstream HO2S graph line example 2

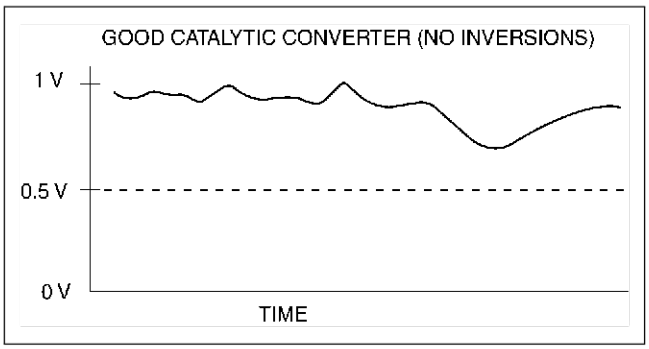

A6E3916W014

Downstream HO2S graph line example 3

Equation
RATIO = 30 inversions (upstream HO2S inversions) ÷ 27 inversions (downstream HO2S inversions) = 1.1 (bad converter)

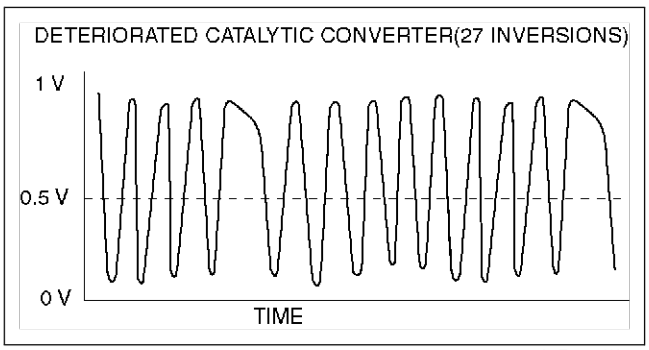

A6E3916W015

End Of Sie

CONTROL SYSTEM

PCM REMOVAL/INSTALLATION

AME414018880W01

1. Disconnect the negative battery cable.
2. Remove in the order indicated in the table.

U.K. specs.

1	Glove compartment
2	Air duct (See F3–81 Air Duct Removal Note)
3	Set nut (See F3–82 Set Nut/bolt (U.K. Specs.) Removal Note) (See F3–82 Set Nut/bolt (U.K. Specs.) Installation Note)
4	PCM bracket
5	Set bolt (See F3–82 Set Nut/bolt (U.K. Specs.) Removal Note) (See F3–82 Set Nut/bolt (U.K. Specs.) Installation Note)
6	PCM connector
7	PCM

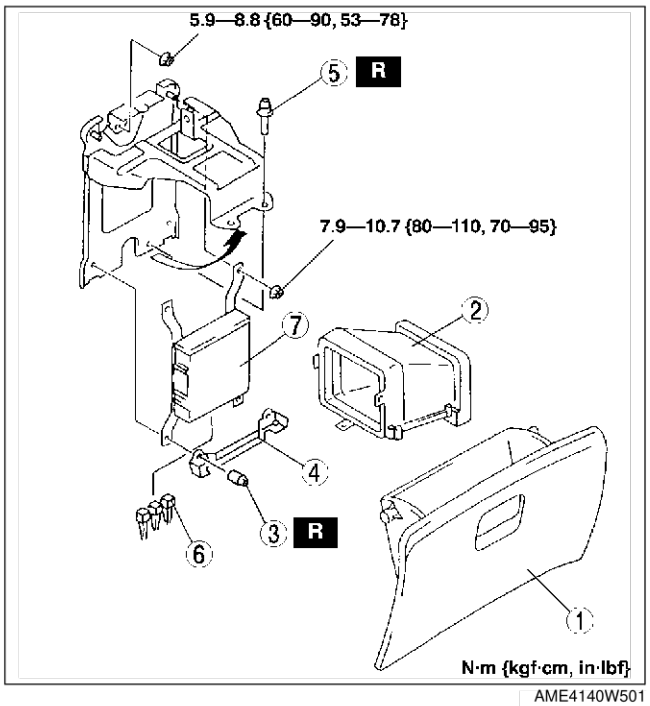

AME4140W501

European (L.H.D.) specs.

1	Glove compartment
2	Air duct (See F3–81 Air Duct Removal Note)
3	PCM connector
4	PCM

3. Install in the reverse order of removal.

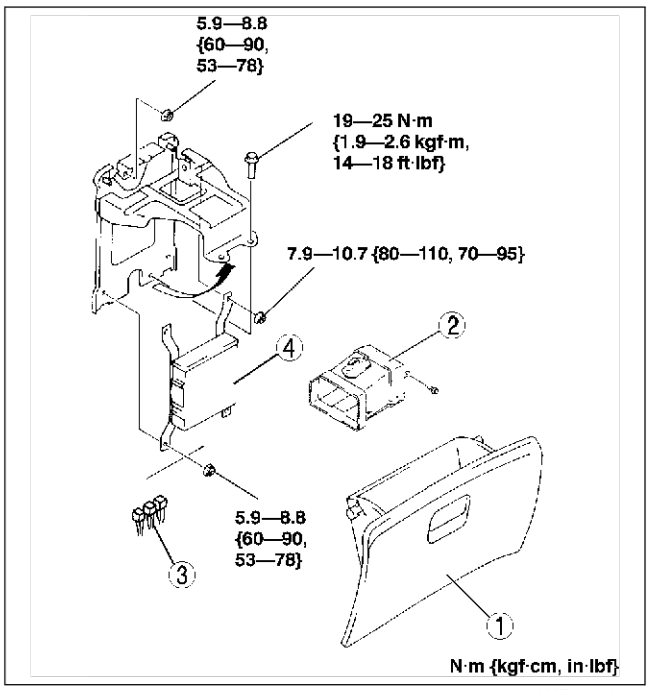

AME4140W500

Air Duct Removal Note

1. Disconnect the front blower resistor connector.
2. Remove the air duct stay fastener.
3. Slide the air duct to the right (European (L.H.D.) specs.) or left (U.K. specs.).

4. Tilt the left side (European (L.H.D.) specs.) or right side (U.K. specs.) down to remove the air duct from the installation place.

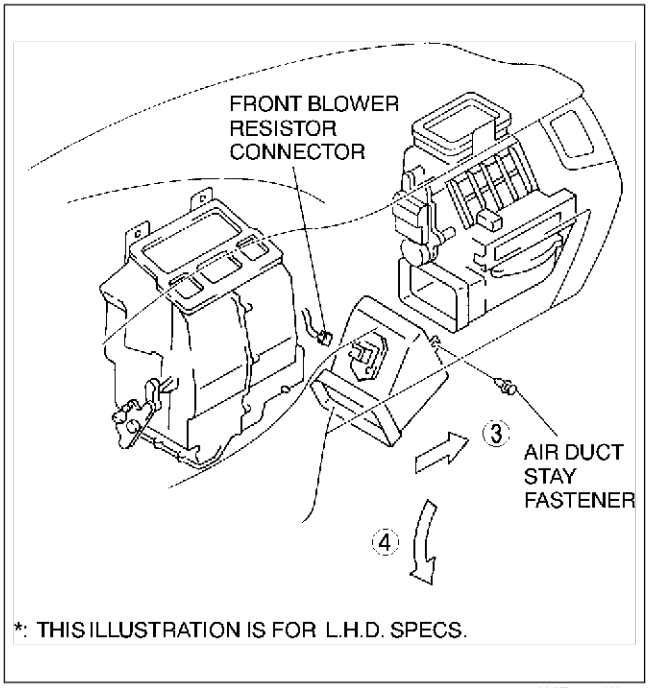

AME4140W502

Set Nut/bolt (U.K. Specs.) Removal Note

1. Using a chisel and a hammer, cut a groove on the head of the set nut/bolt so that a screwdriver can be inserted.
2. Loose the set nut/bolt using an impact screwdriver or pliers.

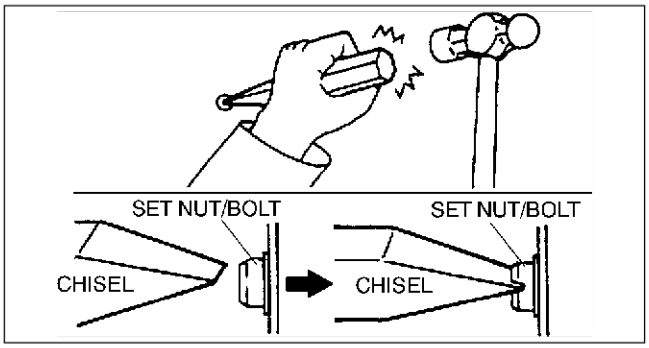

XME3940W005

Set Nut/bolt (U.K. Specs.) Installation Note

1. Install a new set nut/bolt and tighten it until the neck of the nut/bolt is cut.

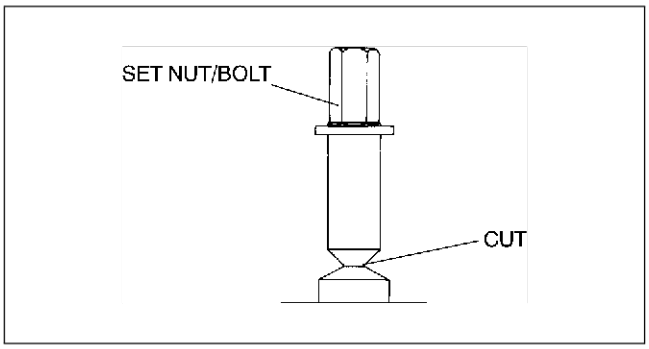

XME3940W006

End Of Sie

PCM INSPECTION

AME414018880W02

Note

- PIDs for the following parts are not available on this model. Go to the appropriate part inspection page.
  - — CMP sensor (See F3–92 CAMSHAFT POSITION (CMP) SENSOR INSPECTION.)
  - — Main relay (See T–28 RELAY INSPECTION.)

1. Connect the **SST** (WDS or equivalent) to the DLC-2.
2. Turn the ignition switch to ON position.
3. Measure the PID value.
   - If PID value is not within the specification, follow the instructions in Action column.

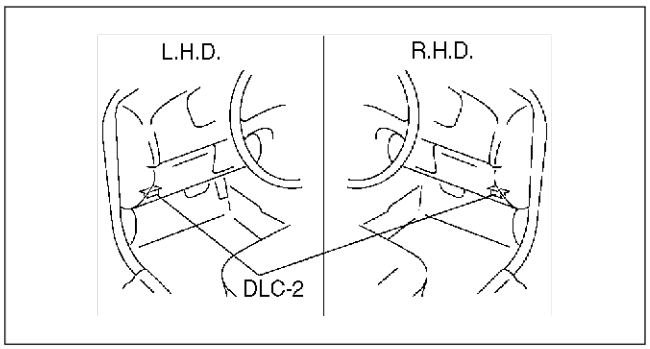

AME4270W001

Note

- The PID/DATA MONITOR function monitors the calculated value of the input/output signals in the PCM. Therefore, an output device malfunction is not directly indicated as a malfunction of the monitored value for the output device. If a monitored value of an output device is out of specification, inspect the monitored value of the input device related to the output control.
- For input/output signals except those of the monitoring items, use a voltmeter to measure the PCM terminal voltage.
- The simulation items that are used in the ENGINE CONTROL SYSTEM OPERATION INSPECTION are as follows.
  - — ACCS
  - — ALTF
  - — ARPMDES
  - — EVAPCP
  - — FAN DUTY
  - — FP
  - — FUELPW1
  - — GENVDSD
  - — HTR11
  - — HTR12
  - — IAC
  - — IMRC
  - — IMTV
  - — INJ_1, INJ_2, INJ_3, INJ_4
  - — SEGRP
  - — TEST

F3

PID/DATA monitor table (reference)

Monitor item (Definition)	Unit/ Condition	Condition/Specification (Reference)	Action	PCM terminal
ACCS (A/C relay)	ON/OFF	Ignition switch ON: OFF A/C switch ON and fan switch ON at idle: ON	Inspect following PIDs: RPM, TP, ECT, ACSW, TR. Inspect A/C relay.	4O
ACSW (A/C switch)	ON/OFF	A/C switch and fan switch ON at ignition switch ON: OFF A/C switch OFF at ignition switch ON: OFF	Inspect A/C switch.	1AC
ALTF (Generator field coil control duty value)	%	Ignition switch ON: 0% Idle: 0—100% Just after A/C switch ON and fan switch ON at idle: Duty value rises	Inspect following PIDs: IAT, ECT, RPM, VPWR, ALTT V. Inspect generator. (See G–13 GENERATOR INSPECTION)	1AD
ALTT V (Generator output voltage)	V	Ignition switch ON: 0 V Idle: Approx. 14.9 V*1 (E/L not operating)	Inspect generator. (See G–13 GENERATOR INSPECTION)	1AA
ARPMDES (Target engine speed)	RPM	No load: 650 rpm E/L operating: 650 rpm P/S operating: 700 rpm A/C ON: 700 rpm	Inspect following PIDs: IAT, RPM, MAP, ECT, MAF, TP, INGEAR, ACSW, TR, PSP, ALTT V. Inspect IAC valve. (See F3–52 IDLE AIR CONTROL (IAC) VALVE INSPECTION) Inspect CKP sensor. (See F3–91 CRANKSHAFT POSITION (CKP) SENSOR INSPECTION)	—
AST (After start timer)	Time	—	—	—
BARO (Barometric pressure)	Pressure	Ignition switch ON (at sea level): approx 101 kPa	Inspect BARO sensor. (See F3–97 BAROMETRIC PRESSURE (BARO) SENSOR INSPECTION)	1G
	V	Ignition switch ON (at sea level): approx 4.1 V		
BOO (Brake switch)	ON/OFF	Brake pedal depressed: ON Brake pedal released: OFF	Inspect brake switch.	1K
CHRGLMP (Generator warning light)	ON/OFF	Ignition switch ON: ON Idle: OFF	Perform applicable DTC troubleshooting. (See F3–104 DTC TABLE)	4C
COLP (Refrigerant pressure switch (middle))*4	ON/OFF	Refrigerant pressure switch (middle) ON *2 at idle: ON Refrigerant pressure switch (middle) OFF*3 at idle: OFF	Inspect refrigerant pressure switch. (See U–17 REFRIGERANT PRESSURE SWITCH INSPECTION)	1Q
CPP (Clutch pedal position)	ON/OFF	Clutch pedal depressed: ON Clutch pedal released: OFF	Inspect clutch switch. (See F3–96 CLUTCH SWITCH INSPECTION)	1R
CPP/PNP (Shift lever position)	ON/OFF	Neutral position: ON Others: OFF	Inspect neutral switch. (See F3–97 NEUTRAL SWITCH INSPECTION)	1W
DTCCNT (Number of DTC detected)	—	—	Perform applicable DTC troubleshooting. (See F3–104 DTC TABLE)	—
ECT (Engine coolant temperature)	°C / °F	ECT 20 °C {68 °F}: 20 °C {68 °F} ECT 60 °C {140 °F}: 60 °C {140 °F}	Inspect ECT sensor. (See F3–90 ENGINE COOLANT TEMPERATURE (ECT) SENSOR INSPECTION)	1M
	V	ECT 20 °C {68 °F}: 3.04—3.14 V ECT 60 °C {140 °F}: 1.29—1.39 V		
EVAPCP (Purge solenoid valve duty value)	%	Ignition switch ON: 0% Idle: 0%	Inspect following PIDs: IAT, RPM, ECT, MAF, O2S11,BARO, INGEAR, TR, VPWR. (See F3–76 PURGE SOLENOID VALVE INSPECTION)	4U
FAN DUTY (Fan control duty)	%	ECT below 98 °C {208 °F}: 0% A/C operating and refrigerant pressure switch (middle) ON: 100%	Inspect following PIDs: RPM, TP, ECT, ACSW, COLP, TEST. Inspect fan control module. (See E–22 FAN CONTROL MODULE INSPECTION)	1U

Monitor item (Definition)	Unit/ Condition	Condition/Specification (Reference)	Action	PCM terminal
FDPDTC (Pending code caused FFD storage)	—	—	Perform applicable DTC troubleshooting. (See F3–104 DTC TABLE)	—
FP (Fuel pump relay)	ON/OFF	Ignition switch ON: OFF Idle: ON Cranking: ON	Inspect following PIDs: RPM. Inspect fuel pump relay. (See T–28 RELAY INSPECTION)	4P*4 4Q*5
FUELPW (Fuel injector duration)	Time	Ignition switch ON: 0 ms Idle (after warm up): approx. 2.5 ms	Inspect following PIDs: IAT, MAF, TP, MAP, ECT, RPM, O2S11, O2S12, INGEAR, TR, PSP, ACSW, VPWR, ALTT V. Inspect fuel injector. (See T–28 RELAY INSPECTION)	4W, 4Z, 4AA, 4AD
FUELSYS (Fuel system status)	Open loop/ Closed loop	Ignition switch ON: Open loop Idle (after warm up): Open loop	Inspect following PIDs: IAT, MAF, TP, MAP, ECT, RPM, O2S11, O2S12, INGEAR, TR, PSP, ACSW, VPWR, ALTT V. Inspect fuel injector. (See T–28 RELAY INSPECTION)	—
GENVDSD (Generator voltage desired)	V	Ignition switch ON: 0 V Idle: Approx. 14.9 V*1 (E/L not operating)	Perform applicable DTC troubleshooting. (See F3–104 DTC TABLE)	—
HTR11 (HO2S heater (front))	ON/OFF	Idle (after warm up): ON⇔OFF	Inspect following PIDs: IAT, MAF, TP, ECT, RPM, ACSW. (See F3–94 HEATED OXYGEN SENSOR (HO2S) INSPECTION)	4A
HTR12 (HO2S heater (rear))	ON/OFF	Ignition switch ON: ON (HO2S heater operated) Idle: ON (HO2S heater operated)	Inspect following PIDs: IAT, MAF, ECT, RPM, ACSW. (See F3–94 HEATED OXYGEN SENSOR (HO2S) INSPECTION)	4D
IAC (IAC valve)	%	Ignition switch ON: 0% Idle: Approx. 60% (ECT 90°C {194 °F} and E/L not operating)	Inspect following PIDs: IAT, RPM, MAP, ECT, MAF, TP, INGEAR, TR, PSP, ACSW. Inspect IAC valve. (See F3–52 IDLE AIR CONTROL (IAC) VALVE INSPECTION)	4G 4J
IAT (Intake air temperature)	°C / °F	IAT 20 °C {68 °F}: 20 °C {68 °F} IAT 30 °C {86 °F}: 30 °C {86 °F}	Inspect IAT sensor. (See F3–87 INTAKE AIR TEMPERATURE (IAT) SENSOR INSPECTION)	2E
	V	IAT 20 °C {68 °F}: 2.4—2.6 V IAT 30 °C {86 °F}: 1.7—1.9 V		
IMTV (VIS control solenoid valve)	ON/OFF	Engine speed is below approx. 4,500 rpm: ON Others: OFF	Inspect following PIDs: RPM. Inspect VIC control solenoid valve. (See F3–53 VARIABLE INTAKE-AIR SYSTEM (VIS) CONTROL SOLENOID VALVE INSPECTION)	4R
IMRC (Variable tumble control solenoid valve)	ON/OFF	Engine speed is below 3,500 rpm and ECT is below 60 °C {140 °F}: ON Others: OFF	Inspect following PIDs: RPM. Inspect VIC control solenoid valve. (See F3–54 VARIABLE TUMBLE CONTROL SOLENOID VALVE INSPECTION)	4T
INGEAR (Load/no load condition)	ON/OFF	CPP or CPP/PNP is ON: OFF Others: ON	Perform applicable DTC troubleshooting. (See F3–104 DTC TABLE)	1R, 1W
IVS (CTP condition)	ON/OFF	CTP: ON Others: OFF	Perform applicable DTC troubleshooting. (See F3–104 DTC TABLE)	2A
KNOCKR (Knocking retard)	Angle	Ignition switch ON: 0 degree Idle: 0 degree	Inspect knock sensor. (See F3–93 KNOCK SENSOR INSPECTION)	2P, 2S
LOAD (Engine load)	%	Ignition switch ON: 0% Idle (after warm up): approx.19%	Inspect MAF sensor. (See F3–88 MASS AIR FLOW (MAF) SENSOR INSPECTION)	—
LONGFT1 (long term fuel trim)	%	Idle (after warm up): approx.–14—14%	Perform applicable DTC troubleshooting. (See F3–104 DTC TABLE)	—

Monitor item (Definition)	Unit/ Condition	Condition/Specification (Reference)	Action	PCM terminal
MAF (Mass airflow)	g/s	Ignition switch ON: approx. 0 g/s Idle (after warm up): 1.5 g/s	Inspect MAF sensor. (See F3–88 MASS AIR FLOW (MAF) SENSOR INSPECTION	1P
	V	Ignition switch ON: approx. 0.7 V Idle (after warm up): 1.3 V		
MAP (Manifold absolute pressure)	Pressure	Ignition switch ON (at sea level): approx 101 kPa {760 mmHg, 14.7 psi}	Inspect MAP sensor. (See F3–89 MANIFOLD ABSOLUTE PRESSURE (MAP) SENSOR INSPECTION)	1J
	V	Ignition switch ON (at sea level): approx 4.1 V		
MIL (Malfunction indicator lamp)	ON/OFF	Ignition switch ON: ON Idle: OFF	Perform applicable DTC troubleshooting. (See F3–104 DTC TABLE)	4I
MIL_DIS (Trabelled distance since the MIL illuminated)	Distance	No DTC: 0 km {0 mph} DTC detected: Not 0 km {0 mph}	Perform applicable DTC troubleshooting. (See F3–104 DTC TABLE)	—
O2S11 (Front oxygen sensor)	V	Ignition switch ON: 0—1.0 V Idle (After warm up): 0—1.0 V Acceleration (After warm up): 0.5—1.0 V Deceleration (After warm up): 0—0.5 V	Inspect HO2S (front). (See F3–94 HEATED OXYGEN SENSOR (HO2S) INSPECTION)	1AB
O2S12 (Rear oxygen sensor)	V	Idle (After warm up): approx 0.6 V	Inspect HO2S (rear). (See F3–94 HEATED OXYGEN SENSOR (HO2S) INSPECTION)	1Y
PSP (Power steering pressure switch)	ON/OFF	Steering wheel in straight ahead position: OFF Others: ON	Inspect PSP switch. (See F3–95 POWER STEERING PRESSURE (PSP) SWITCH INSPECTION)	1Z
RFCFLAG (Readness function code)	ON/OFF	Before running PCM adaptive memory procedure drive mode: ON After running PCM adaptive memory procedure drive mode: OFF	Run PCM adaptive memory procedure drive mode. (See F3–101 OBD DRIVE MODE)	—
RO2FT1 (Rear oxygen sensor fuel trim)	%	Idle (after warm up): approx.–3—3%	Perform applicable DTC troubleshooting. (See F3–104 DTC TABLE)	—
RPM (Engine speed)	rpm	No load: 600—700 rpm E/L operating: 600—700 rpm P/S operating: 650—750 rpm A/C ON: 650—750rpm	Inspect CKP sensor. (See F3–91 CRANKSHAFT POSITION (CKP) SENSOR INSPECTION)	2D, 2G
SEGRP (EGR valve (stepping motor) position)	STEP	Ignition switch ON: 0 step Idle: 0 step Cranking: 0—60 steps	Inspect following PIDs: MAF, TP, ECT, RPM, VSS. Inspect EGR valve. (See F3–78 EGR VALVE INSPECTION)	4E 4H 4K 4N
SHRTFT1 (Short term fuel trim)	%	Idle (after warm up): approx.–30—25%	Perform applicable DTC troubleshooting. (See F3–104 DTC TABLE)	—
SPARKADV (Ignition timing)	BTDC	Ignition switch ON: BTDC 0 degree Idle: BTDC approx. 10 degree	Inspect following PIDs: MAF, TP, ECT, RPM, INGEAR, TR, PSP, ACSW, VPWR. Inspect ignition timing. (See F3–49 IGNITION TIMING INSPECTION)	2J 2M
TEST (TEN terminal (DLC))	ON/OFF	Terminal TEN (DLC) shorted to GND: ON Terminal TEN (DLC) open: OFF	Inspect wiring from DLC terminal TEN to PCM terminal 1I	1I
TP (TP)	%	CTP: 13—23% WOT: 86—96%	Inspect TP sensor. (See F3–88 THROTTLE POSITION (TP) SENSOR INSPECTION)	2A
	V	CTP: 0.65—1.15 V WOT: 4.3—4.8 V		
TPCT (TP sensor voltage at CTP)	V	0.65—1.15 V	Inspect TP sensor. (See F3–88 THROTTLE POSITION (TP) SENSOR INSPECTION)	2A

Monitor item (Definition)	Unit/ Condition		Condition/Specification (Reference)	Action	PCM terminal
VPWR (Battery positive voltage)	V		Ignition switch ON: B+	Inspect main relay. (See T–28 RELAY INSPECTION) Inspect battery. (See G–10 BATTERY INSPECTION)	2Y, 2Z
VSS (Vehicle speed)	km/h	MPH	Vehicle speed 20 km/h {12 mph}: 20 km/h {12 mph} Vehicle speed 40 km/h {25 mph}: 20 km/h {12 mph}	Perform applicable DTC troubleshooting. (See F3–104 DTC TABLE)	2L

*1 : Calculated value; differs from terminal voltage
*2 : Refrigerant pressure switch (middle) turns on when the refrigerant pressure is 1.69—1.84 MPa {17.3—18.7 kgf/cm2, 247—265 psi}
*3 : Refrigerant pressure switch (middle) turns off when the refrigerant pressure is 1.26—1.49 MPa {12.9—15.1 kgf/cm2, 184—214 psi}
*4 : Immobilizer system equipped
*5 : Immobilizer system not equipped

INTAKE AIR TEMPERATURE (IAT) SENSOR INSPECTION

AME414018845W01

Resistance Inspection

Note
- Perform the following inspection only when directed.

1. Disconnect MAF/IAT sensor.
2. Measure the resistance between the MAF/IAT sensor terminals D and E using an ohmmeter.
   - If not as specified, replace the MAF/IAT sensor.
   - If the MAF/IAT sensor is okay, but the IAT PID are out of specification, perform the “Circuit Open/Short Inspection”.

Specification

Ambient temperature (°C {°F})	Resistance (kilohm)
-20 {-4}	13.6—18.4
20 {68}	2.21—2.69
60 {140}	0.493—0.667

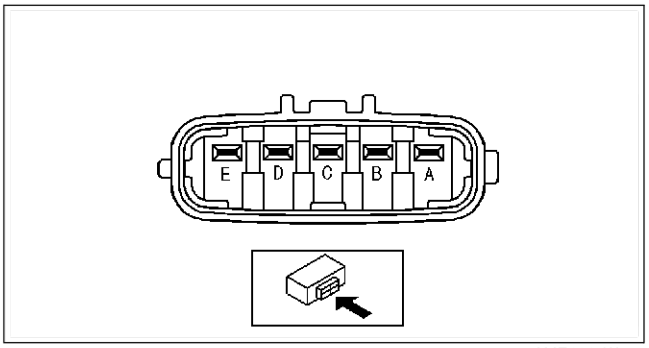

AME4140W503

Circuit Open/Short Inspection

1. Disconnect the PCM connector. (See F3–81 PCM REMOVAL/INSTALLATION.)
2. Inspect the following wiring harnesses for open or short. (Continuity check)

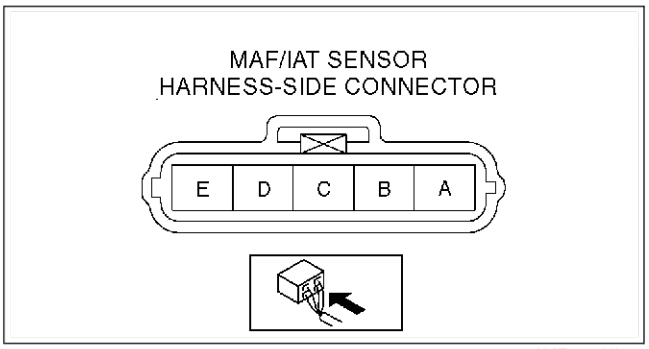

AME4140W504

Open circuit
- If there is no continuity, the circuit is open. Repair or replace the harness.
  — MAF/IAT sensor terminal D (harness-side) and PCM terminal 2E (harness-side)
  — MAF/IAT sensor terminal E (harness-side) and PCM terminal 2H (harness-side)

Short circuit
- If there is continuity, the circuit is shorted. Repair or replace the harness.
  — MAF/IAT sensor terminal E (harness-side) and power supply
  — MAF/IAT sensor terminal D (harness-side) and power supply
  — MAF/IAT sensor terminal D (harness-side) and body GND

MASS AIR FLOW (MAF) SENSOR INSPECTION

AME414013210W01

Voltage Inspection

Note
- Perform the following inspection only when directed.

1. Visually inspect for the following on the MAF sensor.
   - Damage
   - Cracks
   - Terminal bends
   - Terminal rust
     - — If any of the above are found, replace the MAF sensor.
     - — If the MAF PID value is out of specification, carry out the “Circuit Open/Short Inspection”.

Circuit Open/Short Inspection

1. Disconnect the PCM connector. (See F3–81 PCM REMOVAL/INSTALLATION.)
2. Disconnect the MAF sensor connector.
3. Inspect the following wiring harnesses for open or short. (Continuity check)

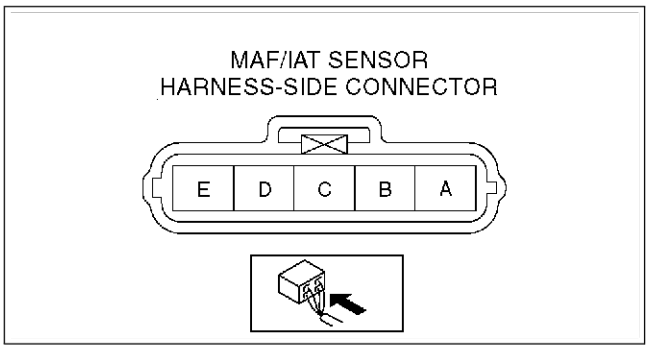

AME4140W504

Open circuit
- If there is no continuity, the circuit is open. Repair or replace the harness.
  - — MAF sensor terminal A (harness-side) and main relay terminal C (harness-side)
  - — MAF sensor terminal B (harness-side) and PCM Terminal 2AC (harness-side)
  - — MAF sensor terminal C (harness-side) and PCM Terminal 1P (harness-side)

Short circuit
- If there is continuity, the circuit is shorted. Repair or replace the harness.
  - — MAF sensor terminal A (harness-side) and body GND
  - — MAF sensor terminal C (harness-side) and power supply
  - — MAF sensor terminal C (harness-side) and body GND
  - — MAF sensor terminal B (harness-side) and power supply

End Of Sie

THROTTLE POSITION (TP) SENSOR INSPECTION

AME414018910W01

Note
- Perform the following inspection only when directed.

Resistance Inspection

1. Perform the following test only when directed.
   - If as specified but TP PID value is out of specification, inspect resistance of TP sensor.
   - If not as specified, inspect the following:
     - — Accelerator cable free play (See F3–55 ACCELERATOR CABLE INSPECTION.)
2. Disconnect the TP sensor connector.
3. Verify that the resistance between TP sensor terminals A and B changes smothly while opened and closed the throttle valve slowly.
   - If not verified, replace TP sensor.
4. Measure the resistance between TP sensor terminals A and C using an ohmmeter.
   - If not as specified, replace the TP sensor.
   - If as specified, but TP PID value is out of specification, perform the “Circuit Open/Short Inspection”.

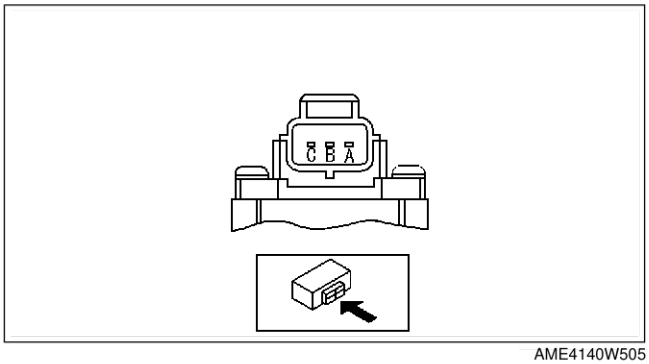

AME4140W505

Specification
3.2—4.8 kilohms

Circuit Open/Short Inspection

1. Disconnect the PCM connector. (See F3–81 PCM REMOVAL/INSTALLATION.)
2. Inspect the following wiring harnesses for open or short. (Continuity check)

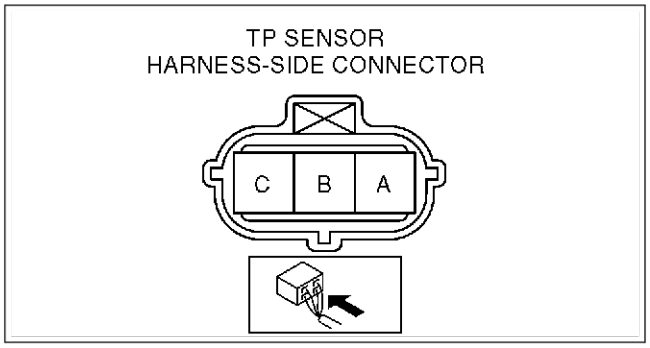

AME4140W506

Open circuit

- If there is no continuity, the circuit is open. Repair or replace the harness.
  - — TP sensor terminal A (harness-side) and PCM terminal 2H (harness-side)
  - — TP sensor terminal B (harness-side) and PCM terminal 2A (harness-side)
  - — TP sensor terminal C (harness-side) and PCM terminal 2K (harness-side)

Short circuit

- If there is continuity, the circuit is shorted. Repair or replace the harness.
  - — TP sensor terminal C (harness-side) and power supply
  - — TP sensor terminal C (harness-side) and body GND
  - — TP sensor terminal B (harness-side) and power supply
  - — TP sensor terminal B (harness-side) and body GND
  - — TP sensor terminal A (harness-side) and power supply

End Of Ste

F3

MANIFOLD ABSOLUTE PRESSURE (MAP) SENSOR INSPECTION

AME414018213W01

Note

- Perform the following inspection only when directed.
- The following vacuum values are indicated by relative pressure from the MAP sensor.

1. Connect the **SSTs** (WDS or equivalent) to the DLC-2.
2. Turn the ignition switch to ON (Engnie OFF).
3. Select MAP PID on the **SSTs** (WDS or equivalent).
4. Verify that the MAP PID (pressure) and barometric pressure are practically equal.
   - If not as verified, perform the “Circuit Open/Short Inspection”.
     - — If there is no open or short circuit, replace the MAP sensor.
   - If as verified, go to next step.
5. Apply vacuum of **–25.0 kPa {–187 mmHg, –7.38 inHg}** to the MAP sensor, and verify that the MAP variation from that of Step 4 is approx. **25.0 kPa {187 mmHg, 7.38 inHg}**.
   - If not as verified, perform the “Circuit Open/Short inspection”.
     - — If there is no open or short circuit, replace the barometric pressure sensor.

Circuit Open/Short Inspection

1. Disconnect the PCM connector.
2. Inspect the following wiring harness for open or short. (Continuity check)

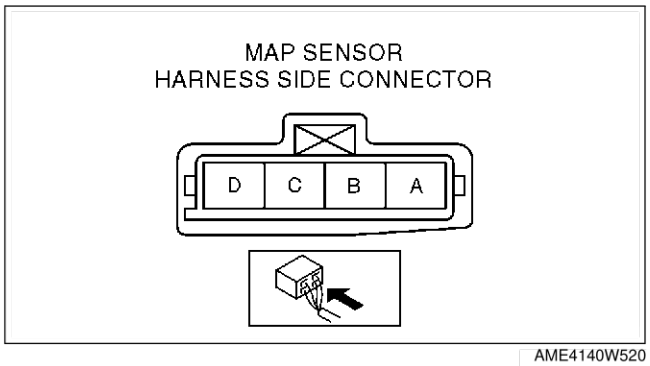

AME4140W520

Open circuit

- If there is no continuity, the circuit is open. Repair or replace the harness.
  - — MAP sensor terminal A (harness-side) and PCM terminal 2H
  - — MAP sensor terminal D (harness-side) and PCM terminal 1J
  - — MAP sensor terminal C (harness-side) and PCM terminal 2K

Short circuit

- If there is continuity, the circuit is shorted. Repair or replace the harness.
  - — MAP sensor terminal C (harness-side) and power supply.
  - — MAP sensor terminal C (harness-side) and body GND.
  - — MAP sensor terminal D (harness-side) and power supply.
  - — MAP sensor terminal D (harness-side) and body GND

End Of Ste

ENGINE COOLANT TEMPERATURE (ECT) SENSOR REMOVAL/INSTALLATION

AME414018840W01

Warning
- **When the engine is hot, it can badly burn. Turn off the engine and wait until it is cool before removing the ECT sensor.**

1. Drain the engine coolant.
2. Disconnect the ECT sensor connector.
3. Remove the ECT sensor.
4. Install in the reverse order of removal.

Tightening torque
10—14 N·m
{1.02—1.42 kgf·m, 7.38—10.32 ft·lbf}

5. Refill the engine coolant.

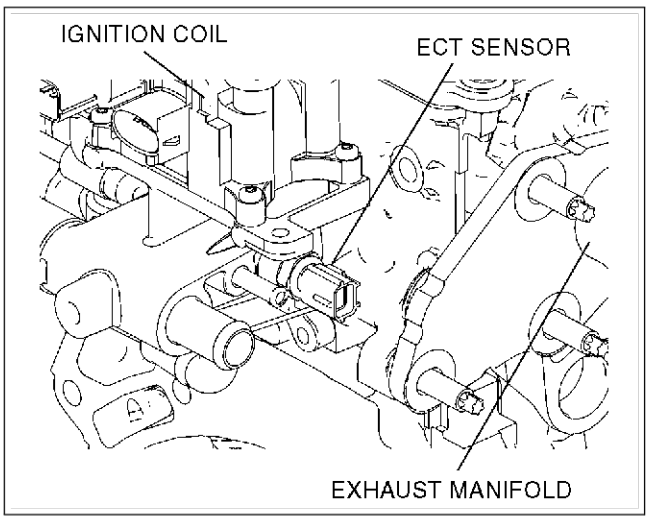

AME4140W507

End Of Sie

ENGINE COOLANT TEMPERATURE (ECT) SENSOR INSPECTION

AME414018840W02

Note
- Perform the following inspection only when directed.

ECT Sensor Resistance Inspection
1. Drain the engine coolant.
2. Remove the ECT sensor (located above the starter).
3. Place the ECT sensor in water with a thermometer, and heat the water gradually.
4. Measure the resistance between the ECT sensor terminals A and B using an ohmmeter.
   - If not as specified, replace the ECT sensor.
   - If the ECT sensor is okay, but ECT PID value is out of specification, perform the “Circuit Open/Short Inspection”.

Specification

Water temperature (°C {°F})	Resistance (kilohm)
20 {68}	35.48—39.20
70 {158}	5.07—5.60
80 {176}	3.65—4.02

Circuit Open/Short Inspection
1. Disconnect the PCM connector. (See F3–81 PCM REMOVAL/INSTALLATION.)
2. Inspect the following wiring harnesses for open or short. (Continuity check)

Open circuit
- If there is no continuity, the circuit is open. Repair or replace the harness.
  — ECT sensor terminal A (harness-side) and PCM terminal 1M (harness-side)
  — ECT sensor terminal B (harness-side) and PCM terminal 2H (harness-side)

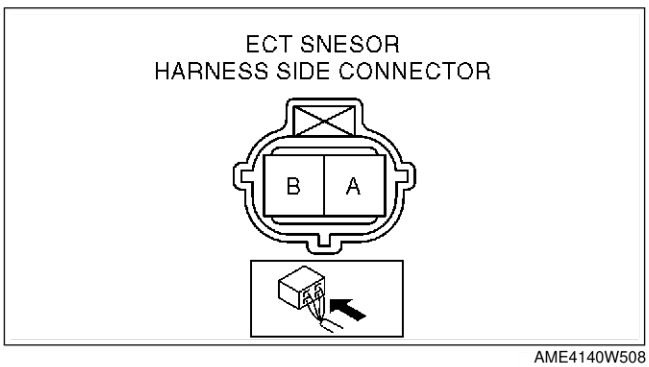

AME4140W508

Short circuit
- If there is continuity, the circuit is shorted. Repair or replace the harness.
  - — ECT sensor terminal A (harness-side) and power supply
  - — ECT sensor terminal A (harness-side) and body GND
  - — ECT sensor terminal B (harness-side) and power supply

End Of Ste

CRANKSHAFT POSITION (CKP) SENSOR INSPECTION

AME414018230W01

Note
- Perform the following inspection only when directed.

Resistance Inspection
1. Disconnect the CKP sensor connector.
2. Measure the resistance between CKP sensor terminals A and B using an ohmmeter.
   - If not as specified, replace the CKP sensor.
   - If CKP sensor resistance is okay, but RPM PID value is out of specification, perform the “Circuit Open/Short Inspection”.

Specification
400—550 ohms

Circuit Open/Short Inspection
1. Disconnect the PCM connector. (See F3–81 PCM REMOVAL/INSTALLATION.)
2. Inspect the following wiring harnesses for open or short. (Continuity check)

Open circuit
- If there is no continuity, the circuit is open. Repair or replace the harness.
  - — CKP sensor terminal A (harness-side) and PCM terminal 2D (harness-side)
  - — CKP sensor terminal B (harness-side) and PCM terminal 2G (harness-side)

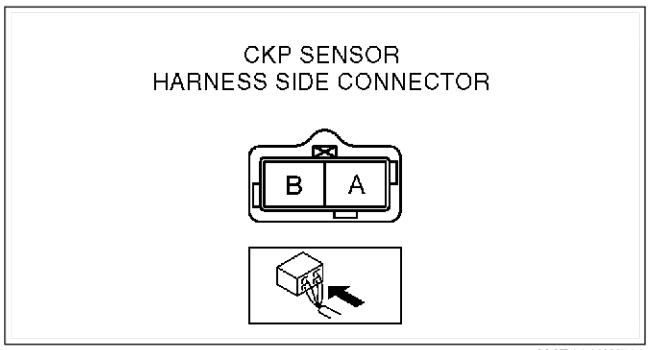

AME4140W509

Short circuit
- If there is continuity, the circuit is shorted. Repair or replace the harness.
  - — CKP sensor terminal A (harness-side) and power supply
  - — CKP sensor terminal A (harness-side) and body GND
  - — CKP sensor terminal B (harness-side) and power supply
  - — CKP sensor terminal B (harness-side) and body GND

End Of Ste

CRANKSHAFT POSITION (CKP) SENSOR REMOVAL/INSTALLATION

AME414018230W02

Removal
1. Perform the following procedure to making the working space.
   (1) Remove the Front wheel (RH).
   (2) Remove the splash shield.
2. Disconnect the CKP sensor connector.
3. Remove the installation bolts to remove the CKP sensor.

Installation

Caution
- **When foreign material, such as an iron chips, gets on the CKP sensor, it can cause abnormal output from the sensor because of flux turbulence and adversely affect engine control. Be sure there is no foreign material on the CKP sensor when replacing.**

1. Perform the following procedure so that piston No.1 is at the top dead center.
   (1) Remove the driveshaft (RH). (See M–18 DRIVE SHAFT (L3) REMOVAL/INSTALLATION.)
   (2) Remove the cylinder brock lower blind plug and install the **SST**.
   (3) Turn the crankshaft pully to the clockwise until it stops.

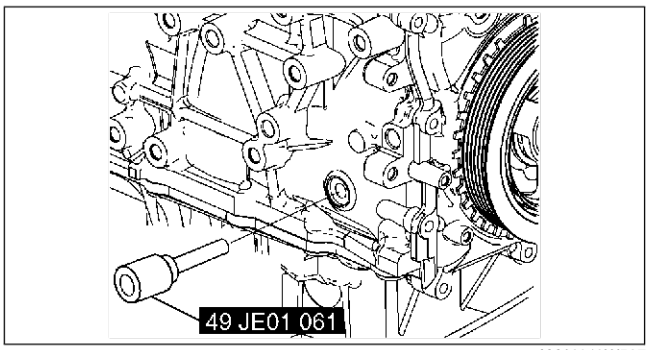

AMJ4140W507

2. Using a straight edge, draw a straight line directly in the center of the ninth tooth of the crankshaft pully pulse wheel(counting counterclockwise from the empty space).

Caution
- **If the line is not accurately drawn, ignition timing, fuel injection and other engine control systems will be adversely effected. Drawn the straignt line carefully using a straight edge.**

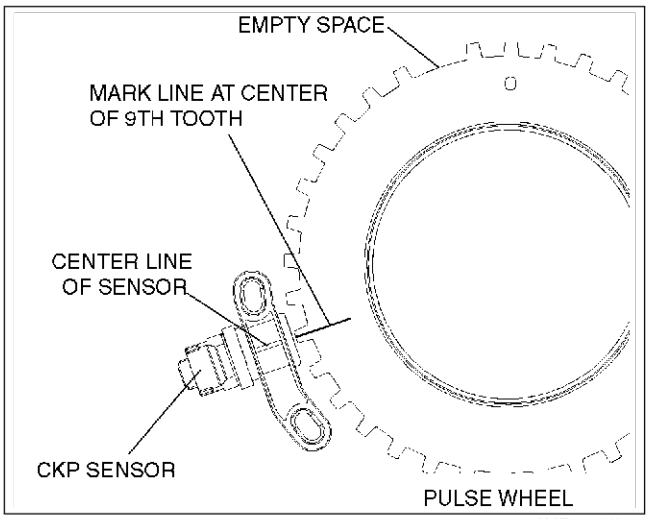

AME4140W010

3. Align the center line of the crankshaft position sensor and the line drawn in Step 2, then install the sensor.
4. Install the CKP sensor fitting bolts.

Tightening torque
5.5—7.5 N·m { 56—76 kgf·cm, 4.1—5.5 ft·lbf}

5. Remove the **SST** then install the cylinder brock lower blind prug.

Tightening torque
20 N·m { 2.0 kgf·m, 15 ft·lbf}

6. Install the front driveshaft (RH). (See M–18 DRIVE SHAFT (L3) REMOVAL/INSTALLATION.)

End Of Sie

CAMSHAFT POSITION (CMP) SENSOR INSPECTION

AME414018200W01

Caution
- **When foreign material, such as an iron chips, gets on the CMP sensor, it can cause abnormal output from the sensor because of flux turbulence and adversely affect engine control. Be sure there is no foreign material on the CMP sensor when replacing.**

Note
- Perform the following inspection only when directed.

Resistance Inspection
1. Disconnect the CMP sensor connector.
2. Measure the resistance between CMP sensor terminals A and B using an ohmmeter.
   - If not as specified, replace the CMP sensor.
   - If CMP sensor resistance is okay, perform the “Circuit Open/Short Inspection”.

Specification
400—550 ohms

Circuit Open/Short Inspection

1. Disconnect the PCM connector. (See F3–81 PCM REMOVAL/INSTALLATION.)
2. Inspect the following wiring harnesses for open or short. (continuity check)

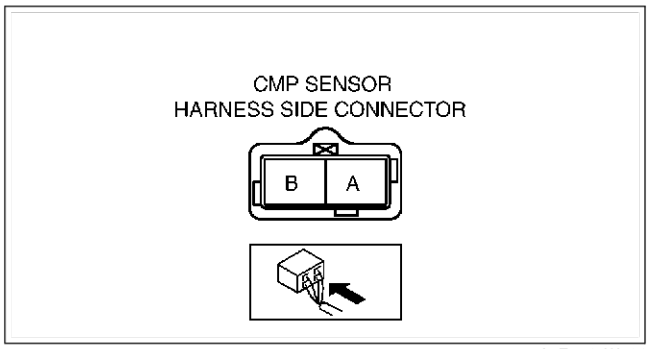

A6E3940W014

Open circuit

- If there is no continuity, the circuit is open. Repair or replace the harness.
  - — CMP sensor terminal A (harness-side) and PCM terminal 2M (harness-side)
  - — CMP sensor terminal B (harness-siede) and PCM terminal 2J (harness-side)

Short circuit

- If there is continuity, the circuit is shorted. Repair or replace the harness.
  - — CMP sensor terminal A (harness-side) and power supply
  - — CMP sensor terminal A (harness-side) and body GND
  - — CMP sensor terminal B (harness-side) and power supply
  - — CMP sensor terminal B (harness-side) and body GND

End Of Sta

F3

KNOCK SENSOR INSPECTION

AME414018921W01

Note

- Perform the following test only when directed.

Resistance Inspection

1. Turn the ignition switch to LOCK.
2. Disconnect the knock sensor connector.
3. Measure the resistance between the knock sensor terminals A and B using an ohmmeter.
   - If not as specified, replace the knock sensor.
   - If the knock sensor is okay, but PID value is out of specification, perform the “Circuit Open/Short Inspection”.

Specification
Approx. 4.87 megohms

Circuit Open/Short Inspection

1. Disconnect the PCM connector. (See F3–81 PCM REMOVAL/INSTALLATION.)
2. Inspect the following wiring harnesses for open or short. (Continuity check)

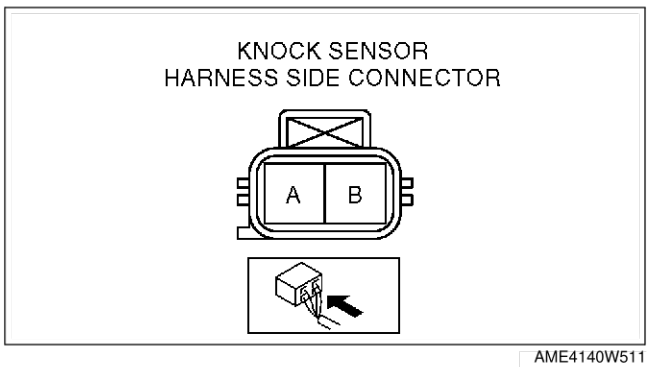

AME4140W511

Open circuit

- If there is no continuity, the circuit is open. Repair or replace the harness.
  - — Knock sensor terminal A (harness-side) and PCM terminal 2S (harness-side)
  - — Knock sensor terminal B (harness-side) and PCM terminal 2P (harness-side)

Short circuit

- If there is continuity, the circuit is shorted. Repair or replace the harness.
  - — Knock sensor terminal A (harness-side) and power supply
  - — Knock sensor terminal A (harness-side) and body GND
  - — Knock sensor terminal B (harness-side) and power supply
  - — Knock sensor terminal B (harness-side) and body GND

End Of Sta

KNOCK SENSOR REMOVAL/INSTALLATION

AME414018921W02

1. Remove the intake manifold. (See F3–50 INTAKE-AIR SYSTEM REMOVAL/INSTALLATION.)
2. Remove the knock sensor attachment bolt to remove the knock sensor.
3. Install in the reverse order of removal.

Tightening torque
16—24 N·m
{1.63—2.44 kgf·m, 11.8—17.7 ft·lbf}

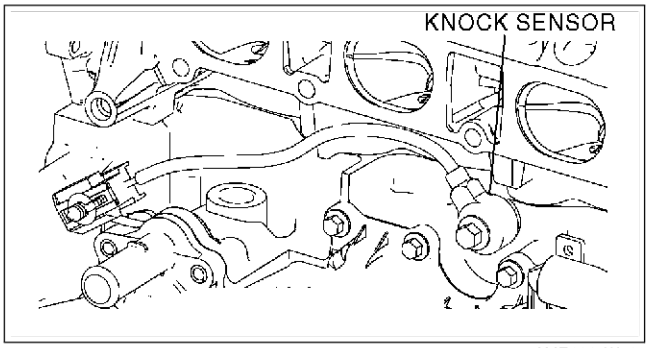

AME4140W512

HEATED OXYGEN SENSOR (HO2S) INSPECTION

AME414018861W01

HO2S Voltage Inspection

Note
- Perform the following inspection only when directed.

1. Warm up the engine and run it at idle.
2. Disconnect the HO2S connector.
3. Connect the voltmeter test leads to the following HO2S terminals:
   - HO2S (front and rear)
     — (+) lead—terminal A
     — (–) lead—terminal B
4. With the vehicle stopped, run the engine at **3,000 rpm** until the voltmeter moves between **0.5 and 0.7 V**.
5. Verify that the measurement voltage changes when the engine speed increases and decreases suddenly several times.
   - If not as specified, replace the HO2S.
   - If the HO2S is okay, but O2S11 or O2S12 PID value is out of specification, perform the “Circuit Open/Short Inspection”.

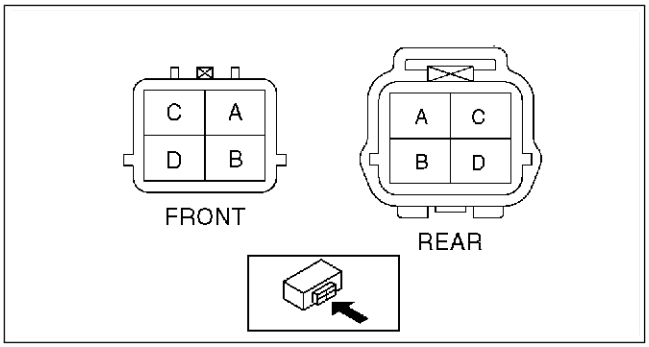

AME4140W513

Specification

Engine speed	Voltage (V)
Acceleration	0.5—1.0
Deceleration	0—0.5

Circuit Open/Short Inspection

1. Disconnect the PCM connector. (See F3–81 PCM REMOVAL/INSTALLATION.)
2. Inspect the following wiring harnesses for open or short. (Continuity check)

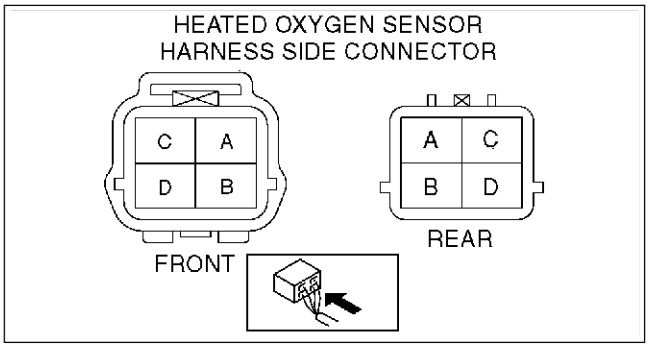

AME4140W514

Open circuit
- If there is no continuity, the circuit is open. Repair or replace the harness.
  Front
  — HO2S terminal A (harness-side) and PCM terminal 1AB (harness-side)
  — HO2S terminal B (harness-side) and PCM terminal 2H (harness-side)
  Rear
  — HO2S terminal A (harness-side) and PCM terminal 1Y (harness-side)
  — HO2S terminal B (harness-side) and PCM terminal 2H (harness-side)

Short circuit
- If there is continuity, the circuit is shorted. Repair or replace the harness.

Front and Rear
— HO2S terminal A (harness-side) and body GND
— HO2S terminal A (harness-side) and power supply
— HO2S terminal B (harness-side) and power supply

HO2S Heater Resistance Inspection
1. Disconnect the HO2S connector.
2. Measure the resistance between the HO2S terminals C and D.
   - If not as specified, replace the HO2S.
   - If the HO2S heater is okay, but PID value is out of specification, perform the “Circuit Open/ Short Inspection”.

Specification
Front : 5.0—6.8 ohms
Rear : 14.1—18.9 ohms

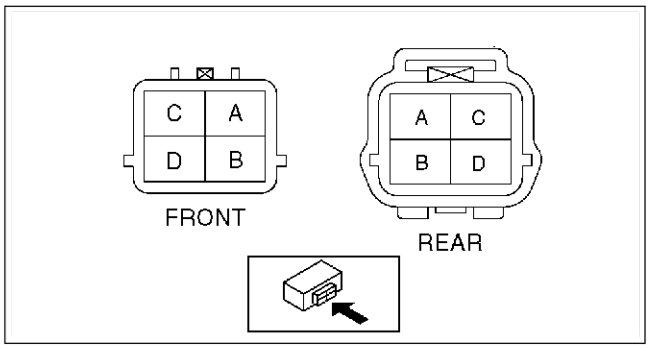

AME4140W513

Circuit Open/Short Inspection
1. Disconnect the PCM connector. (See F3–81 PCM REMOVAL/INSTALLATION.)
2. Inspect the following wiring harnesses for open or short. (Continuity check)

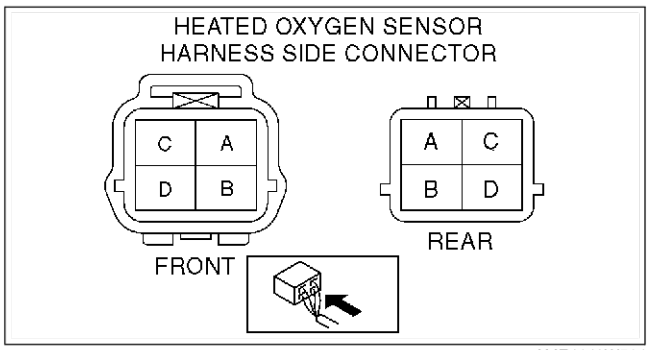

AME4140W514

Open circuit
- If there is no continuity, the circuit is open. Repair or replace the harness.

Front
— HO2S terminalC (harness-side) and ignition switch
— HO2S terminal D (harness-side) and PCM terminal 4A (harness-side)

Rear
— HO2S terminal C (harness-side) and ignition switch
— HO2S terminal D (harness-side) and PCM terminal 4D (harness-side)

Short circuit
- If there is no continuity, the circuit is shorted. Repair or replace the harness.

Fornt and rear
— HO2S terminal C (harness-side) and body GND
— HO2S terminal D (harness-side) and power supply
— HO2S terminal D (harness-side) and body GND

End Of Sta

POWER STEERING PRESSURE (PSP) SWITCH INSPECTION

AME414032230W01

Note
- Perform the following inspection only when directed.

Continuity Inspection
1. Inspect the following if the power steering is inoperative (See N–5 POWER STEERING FLUID INSPECTION.):
   - Power steering fluid level
   - Power steering fluid leakage
   - Power steering fluid pressure
2. Disconnect the PSP switch connector.
3. Start the engine.
4. Inspect for continuity between the PSP switch terminal and GND using an ohmmeter.
   - If not as specified, replace the PSP switch.
   - If the PSP switch is okay, but PSP PID value is out of specification, perform the “Circuit Open Inspection”.

Specification

○—○ : Continuity

Condition	Terminal	GND
Steering wheel in straight ahead position.		
While turning steering wheel.	○	○

YMU140WC3

Circuit Open Inspection

1. Disconnect the PCM connector. (See F3–81 PCM REMOVAL/INSTALLATION.)
2. Inspect the following harness for open or short. (Continuity check)

Open circuit

- If there is no continuity, the circuit is open. Repair or replace the harness.
  — PSP switch terminal (harness-side) and PCM terminal 1Z (harness-side)

Short circuit

- If there is continuity, the circuit is shorted. Repair or replace the harness.
  — PSP switch terminal (harness-side) and body GND

End Of Ste

CLUTCH SWITCH INSPECTION

AME414018660W01

Note

- Perform the following inspection only when directed.

Continuity Inspection

1. Verify that the clutch switch is installed properly.
2. Disconnect the negative battery cable.
3. Remove the clutch switch.
4. Inspect for continuity between the clutch switch terminals using an ohmmeter.
   - If the clutch switch is okay, but CPP PID value is out of specification, carry out of the “Clutch Switch Circuit Open/Short Inspection”.
   - If not as specified, replace the clutch switch.

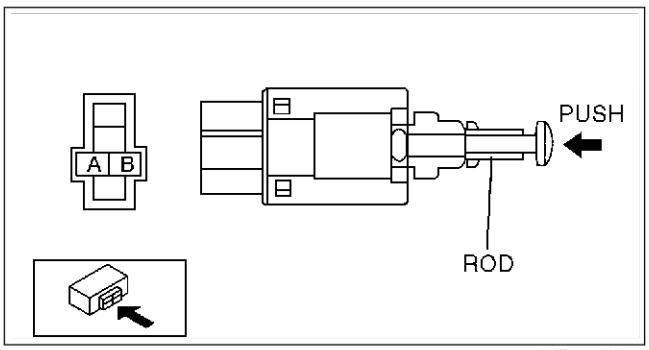

AME4140W515

Specification

○—○ : Continuity

Condition	Terminal	
	A	B
Rod pushed		
Except above	○	○

XME3940W038

Circuit Open/Short Inspection

1. Disconnect the PCM connector. (See F3–81 PCM REMOVAL/INSTALLATION.)
2. Inspect the following harness for open or short. (Continuity check)

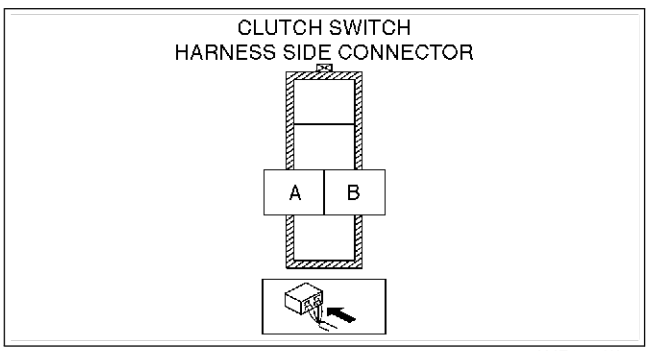

AME4140W516

Open circuit

- Clutch switch terminal B (harness-side) and PCM terminal 1R
- Clutch switch terminal A and body GND

Short circuit

- Clutch switch terminal B (harness-side) and power supply
- Clutch switch terminal B (harness-side) and body GND

End Of Ste

NEUTRAL SWITCH INSPECTION

AME414017640W01

Note
- Perform the following inspection only when directed.

Continuity Inspection

1. Disconnect the negative battery cable.
2. Remove the neutral switch. (J1–4 MANUAL TRANSAXLE REMOVAL/INSTALLATION.)
3. Inspect for continuity between the neutral switch terminals using an ohmmeter.
   - If the neutral switch is okay, but CPP/PNP PID value is out of specification, carry out of the “Circuit Open/Short Inspection”.
   - If not as specified, replace the neutral switch.

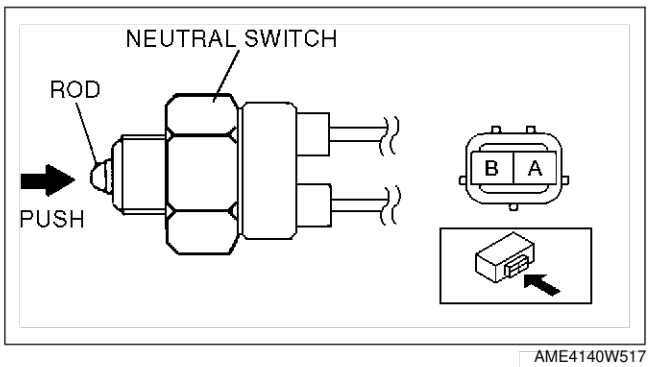

AME4140W517

Specification

○—○ : Continuity

Condition	Terminal	
	A	B
Rod pushed	○	○
Except above		

XME3940W040

Circuit Open/Short Inspection

1. Disconnect the PCM connector. (See F3–81 PCM REMOVAL/INSTALLATION.)
2. Inspect the following harness for open or short. (Continuity check)

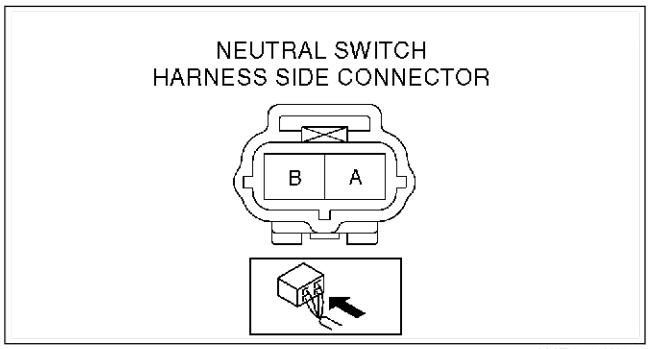

AME4140W518

Open circuit
- Neutral switch terminal A (harness-side) and PCM terminal 1W (harness-side)
- Neutral switch terminal B (harness-side) and body GND

Short circuit
- Neutral switch terminal A (harness-side) and body GND

End Of Ste

BAROMETRIC PRESSURE (BARO) SENSOR INSPECTION

AME414018881W13

Note
- Perform the following inspection only when directed.
- The following vacuum values are indicated by relative pressure from the barometric pressure sensor.

1. Connect the **SSTs** (WDS or equivalent) to the DLC-2.
2. Turn the ignition switch to ON.
3. Select BARO on the **SSTs** (WDS or equivalent).
4. Verify that the BARO PID (pressure) and barometric pressure are practically equal.
   - If not as verified, perform the “Circuit Open/Short Inspection”.
     — If there is no open or short circuit, replace the barometric pressure sensor.
   - If as verified, go to next step.
5. Apply vacuum of **–25.0 kPa {–187 mmHg, –7.38 inHg}** to the barometric pressure sensor, and verify that the BARO variation from that of Step 4 is approx. **25.0 kPa {187 mmHg, 7.38 inHg}**.
   - If not as verified, perform the “Circuit Open/Short inspection”.
     — If there is no open or short circuit, replace the barometric pressure sensor.

Circuit Open/Short Inspection

1. Disconnect the PCM connector.
2. Inspect the following wiring harness for open or short. (Continuity check)

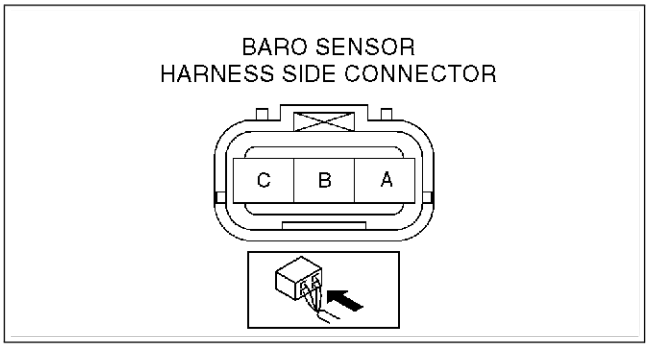

AME4140W519

Open circuit

- If there is no continuity, the circuit is open. Repair or replace the harness.
  - — Barometric pressure sensor terminal A (harness-side) and PCM terminal 1G
  - — Barometric pressure sensor terminal B (harness-side) and PCM terminal 2H
  - — Barometric pressure sensor terminal C (harness-side) and PCM terminal 2K

Short circuit

- If there is continuity, the circuit is shorted. Repair or replace the harness.
  - — Barometric pressure sensor terminal C (harness-side) and power supply.
  - — Barometric pressure sensor terminal C (harness-side) and body GND.
  - — Barometric pressure sensor terminal A (harness-side) and power supply.
  - — Barometric pressure sensor terminal A (harness-side) and body GND

End Of Se

ON-BOARD DIAGNOSTIC

FOREWORD

AME417018881W08

- When the customer reports a vehicle malfunction, check the malfunction indicator lamp (MIL) indication and diagnostic trouble code (DTC), then diagnose the malfunction according to the following flowchart.
  - — If a DTC exists, diagnose by following the applicable DTC inspection. (See F3–104 DTC TABLE.)
  - — If no DTC exists and the MIL does not illuminate or flash, diagnose by following the applicable symptom troubleshooting. (See F3–224 ENGINE SYMPTOM TROUBLESHOOTING.)

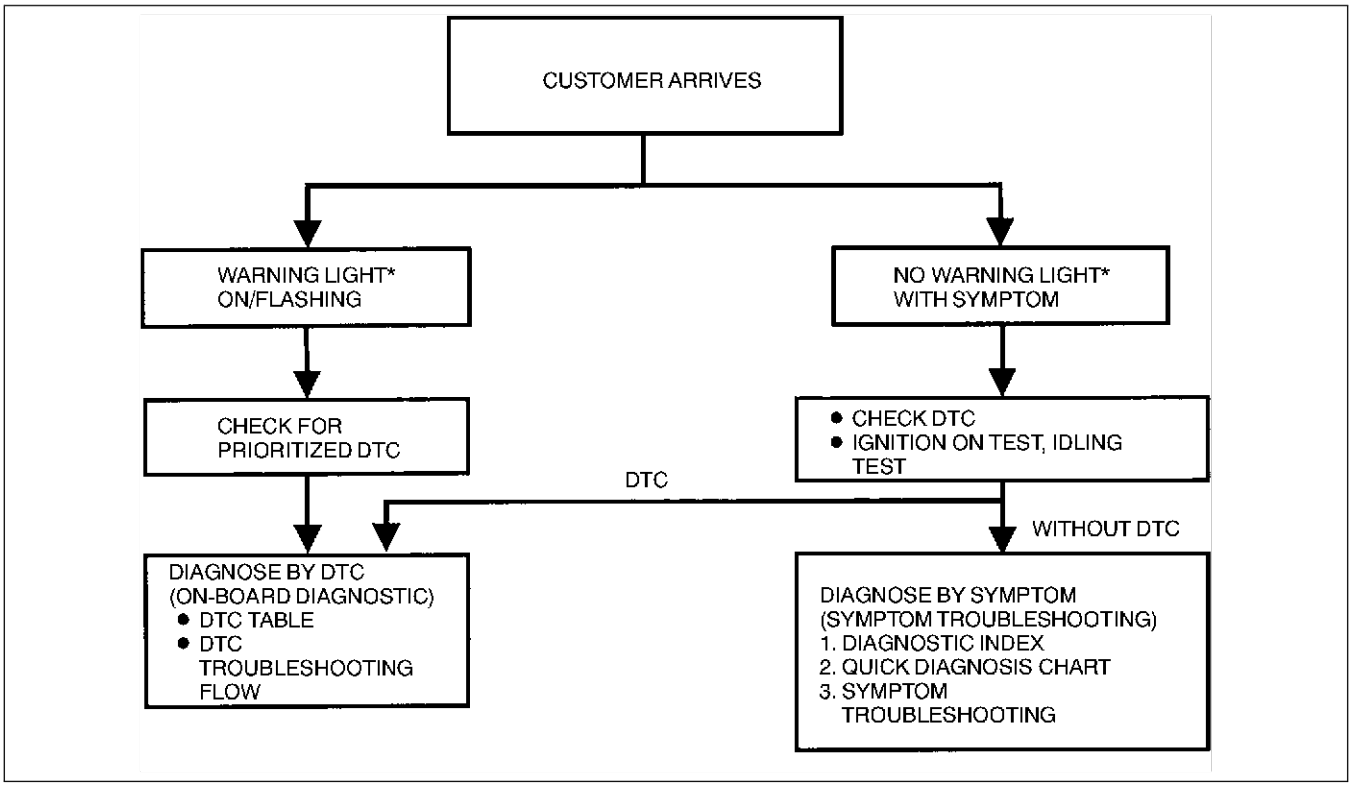

YMU102WBX

* : Malfunction Indicator lamp (MIL), Generator Warning Light, Security Light

End Of Sta

OBD PENDING TROUBLE CODES

AME417018881W09

- These appear when a problem is detected in a monitored system.

1 Drive Cycle Type

- If any problems are detected in the first drive cycle, pending codes will be stored in the PCM memory, as well as DTCs.
- After pending codes are stored, if the PCM judges that the system is normal (malfunction repaired) in any future drive cycle, the PCM deletes the pending codes.

2 Drive Cycle Type

- The code for a failed system is stored in the PCM memory in the first drive cycle. If the problem is not found in the second drive cycle, the PCM judges that the system returned to normal or the problem was mistakenly detected, and deletes the pending code. If the problem is found in the second drive cycle too, the PCM judges that the system has failed, and stores the pending codes, and the DTCs.
- After pending codes are stored, if the PCM judges that the system is normal (malfunction repaired) in any future drive cycle, the PCM deletes the pending codes.

End Of Sta

OBD FREEZE FRAME DATA

AME417018881W10

- This is the technical data which indicates the engine condition at the time of the first malfunction. This data will remain in the memory even if another emission-related DTC is stored, with the exception of the Misfire or Fuel System DTCs. Once freeze frame data for the Misfire or Fuel System DTC is stored, it will overwrite any previous data and the freeze frame will not be overwritten again.

End Of Ste

OBD ON-BOARD SYSTEM READINESS TEST

AME417018881W11

- This shows OBD system operating status. If any monitor function is incomplete, WDS or equivalent will identify which monitor function has not been completed. Misfires, Fuel System and Comprehensive Components (CCM) are continuous monitoring-type functions. The catalyst, EGR system and oxygen sensor will be monitored under drive cycles. The OBD diagnostic system is initialized by performing the DTC cancellation procedure or disconnecting the negative battery cable.

End Of Ste

OBD DIAGNOSTIC MONITORING TEST RESULTS

AME417018881W12

- These results are from the intermittent monitor system's technical data and are used to determine whether the system is normal or not. They also display the system thresholds and diagnostic results. The intermittent monitor system monitors the oxygen sensor, EGR system and the catalyst.

End Of Ste

OBD READ/CLEAR DIAGNOSTIC TEST RESULTS

AME417018881W13

- This retrieves all stored DTCs in the PCM and clears the DTCs, Freeze Frame Data, On-Board Readiness Test Results, Diagnostic Monitoring Test Results and Pending Trouble Codes.

End Of Ste

OBD PARAMETER IDENTIFICATION (PID) ACCESS

AME417018881W14

- The PID mode allows access to certain data values, analog and digital inputs and outputs, calculated values and system status information. Since PID values for output devices are PCM internal data values, inspect each device to identify which output devices are malfunctioning.

End Of Ste

ON-BOARD DIAGNOSTIC TEST

AME417018881W15

DTCs Reading Procedure

1. Perform the necessary vehicle preparation and visual inspection.
2. Connect WDS or equivalent to the vehicle DLC-2 16-pin connector located as shown in the figure.
3. Retrieve DTCs using WDS or equivalent.

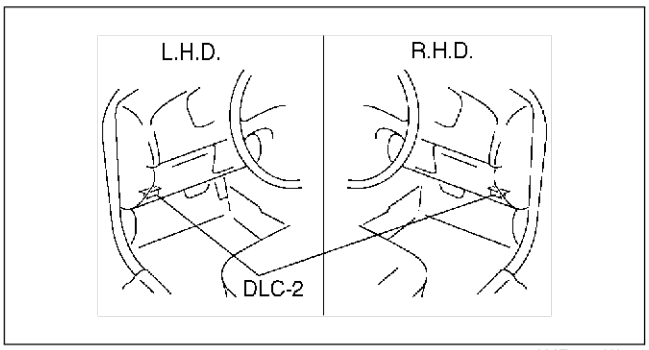

AME4270W001

Pending Trouble Code Access Procedure

1. Perform the necessary vehicle preparation and visual inspection.
2. Connect WDS or equivalent to the vehicle DLC-2 16-pin connector located as shown in the figure.
3. Retrieve **PENDING TROUBLE CODES** using WDS or equivalent.

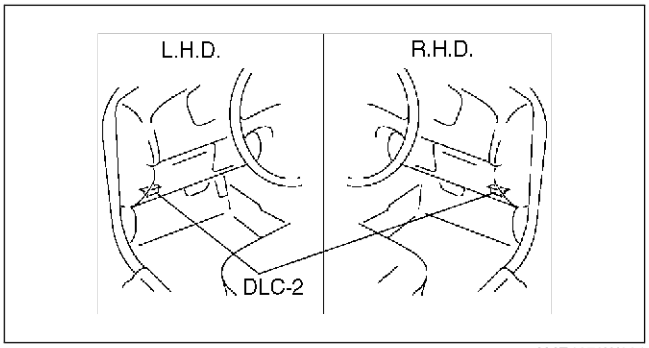

AME4270W001

Freeze Frame PID Data Access Procedure

1. Perform the necessary vehicle preparation and visual inspection.
2. Connect WDS or equivalent to the vehicle DLC-2 16-pin connector located as shown in the figure.
3. Record the FREEZE FRAME DATA using WDS or equivalent.

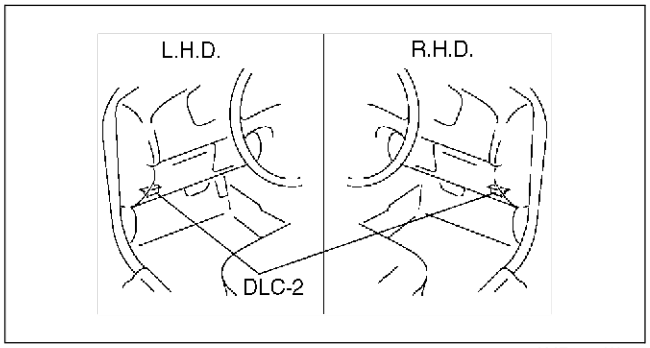

AME4270W001

On-Board System Readiness Tests Access Procedure

1. Perform the necessary vehicle preparation and visual inspection.
2. Connect WDS or equivalent to the vehicle DLC-2 16-pin connector located as shown in the figure.
3. Monitor the OBD system operating status using WDS or equivalent.

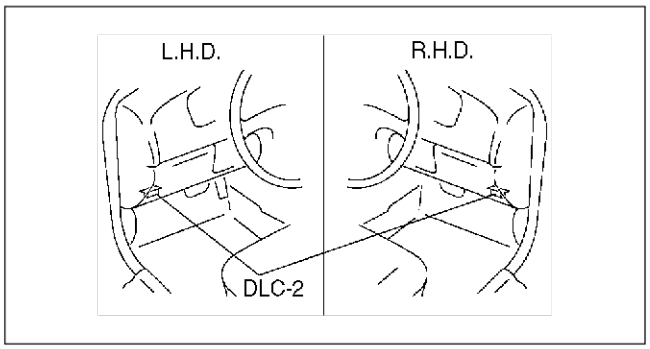

AME4270W001

Diagnostic Monitoring Test Results Access Procedure

1. Perform the necessary vehicle preparation and visual inspection.
2. Connect WDS or equivalent to the vehicle DLC-2 16-pin connector located as shown in the figure.
3. Access to the DIAGNOSTIC MONITORING TEST RESULTS and read the test results using WDS or equivalent.

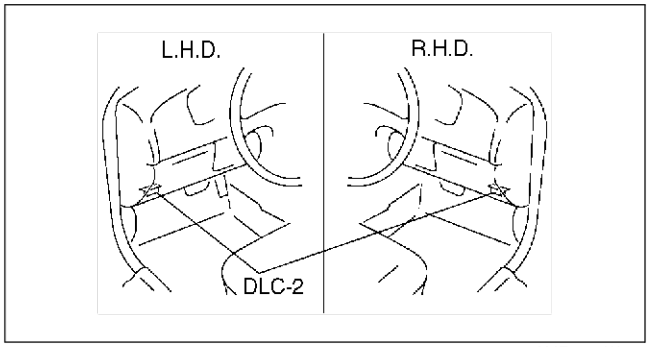

AME4270W001

End Of Sta

OBD DRIVE MODE

AME417018881W16

- Performing the Drive Mode inspects the OBD system for proper operation. The Drive Mode must be performed to ensure that no additional DTCs are present.
- During Drive Mode, the following systems are inspected:
  — Oxygen sensor (HO2S)
  — Oxygen sensor heater
  — Catalytic converter (TWC)

Caution

- **While performing the Drive Mode, always operate the vehicle in a safe and lawful manner.**
- **When the WDS or equivalent is used to observe monitor system condition while driving, be sure to have another technician with you, or record the data in the WDS or equivalent using the PID/DATA MONITOR AND RECORD function and inspect later.**

Note
- Vehicle speed and engine speed detected by the PCM may differ from that indicated by the speedometer and tachometer. Use the WDS or equivalent to monitor vehicle speed.
- If the OBD system inspection is not completed during the Drive Mode, the following causes are considered:
  1. The OBD system detects a malfunction.
  2. The Drive Mode procedure is not completed correctly.
- Disconnecting the battery will reset the memory. Do not disconnect the battery during and after Drive Mode.
- The WDS or equivalent can be used at anytime through the course of Drive Mode to monitor the completion condition. Monitoring can be done by viewing the ON-BOARD SYSTEM READINESS menu.

PCM Adaptive Memory Procedure Drive Mode

Note
- The PCM adaptive memory condition can be confirmed with RFCFLAG PID.
- If RFCFLAG PID is ON, PCM adaptive memory procedure drive mode is not necessary, because the PCM already has adaptive memory.
- If RFCFLAG PID is OFF, PCM adaptive memory procedure drive mode should be performed before any other drive mode.

1. Start the engine and warm it up completely.
2. Verify the following conditions and correct if necessary.
   - All accessory loads (A/C, headlights, blower fan, rear window defroster) are off.
   - Initial ignition timing and idle speed are within specification.
   - TEN and GND of DLC are not connected.
3. Perform no load racing at the engine speed at the **2,800—3,200 rpm** for **more than 30 s**, then idle the engine for **more than 30 s** after the cooling fan is stopped. If possible, monitor RPM PID for engine speed and FAN DUTY PID for cooling fan condition during this procedure.
4. Turn ignition key to OFF then ON again.
5. Access to RFCFLAG PID to confirm PCM adaptive memory condition.
   - If RFCFLAG PID is ON, PCM adaptive memory procedure drive mode is completed.
   - If RFCFLAG PID is still OFF, go back to Step 1.

HO2S Heater, HO2S, and TWC Repair Verification Drive Mode

1. Access to RFCFLAG PID to confirm PCM adaptive memory condition.
   - If RFCFLAG PID is OFF, perform PCM adaptive memory procedure drive mode first.
   - If RFCFLAG PID is ON, start the engine and warm up completely.
2. Verify that all accessory loads (A/C, headlights, blower fan, rear window defroster) are off.
3. Drive the vehicle as shown in the graph; first drive in zone O, then A or B, followed by C or D, finally E or F. Driving condition before the constant speed driving is not specified.

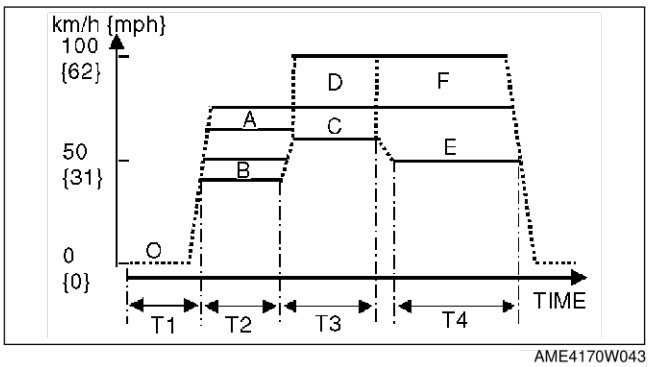

AME4170W043

Zone	Shift Position	Vehicle Speed km/h {mph}	Time Sec.
O	Neutral	0{0}	T1: Above 455
A	2nd	40—50 {25—32}	T2: Above 30
B	3rd	65—75 {41—47}	
C	2nd	60—75{38—46}	T3: Above 20
D	3rd	75—100{47—62}	
E	4th	50—75{31—46}	T4: Above 120
F	5th	75—100{47—62}	

4. Stop vehicle and access ON-BOARD SYSTEM READINESS menu to inspect the Drive Mode completion condition.
   - If completed, RFC changes from NO to YES.
   - If not completed, turn the ignition key to OFF then go back to Step 3.
5. Access DIAGNOSTIC MONITORING TEST RESULTS menu to inspect the monitor results.
   - If MEAS are not within specification, repair is not completed.
6. Verify that no DTCs are available.

End Of Sie

DIAGNOSTIC MONITORING TEST RESULTS

AME417018881W17

- The purpose of this test mode is to confirm the result of the OBD monitor diagnostic test results. The result values stored when a particular monitored item is completed are displayed. If the monitored item is not completed, initial value is displayed.

TEST ID	Description	Related system
10:01:0A	Rich to lean sensor threshold voltage	HO2S
10:02:0A	Lean to rich sensor threshold voltage	
10:03:0A	Low sensor voltage for switching time calculation	
10:04:0A	High sensor voltage for switching time calculation	
10:05:10	Rich to lean sensor switching time	
10:06:10	Lean to rich sensor switching time	
10:0A:10	Sensor period	
10:80:20	Front and Rear HO2S switching time ratio	TWC

End Of Ste

DTC CONFIRMATION PROCEDURE

AME417018881W18

STEP	INSPECTION		ACTION
1	**RECORD CONTINUOUS MEMORY DTC AND FREEZE FRAME DATA** • Turn ignition key to ON (Engine OFF). • Connect WDS or equivalent to DLC-2. • Retrieve all stored DTCs. • Are there any DTCs present?	Yes	Record all stored DTCs (Continuous Memory DTC) and Freeze Frame Data on repair order, then go to next step.
		No	Go to next step.
2	**VERIFY RELATED REPAIR INFORMATION** • Check for related Service information availability. • Is any related repair information available?	Yes	Perform repair or diagnosis according to available Service information. • If vehicle is not repaired, go to next step.
		No	Go to next step.
3	**PERFORM KEY ON ENGINE OFF (KOEO) SELF-TEST** • Start engine. • Warm up engine completely. • Turn off all electrical loads. • Perform KOEO SELF-TEST PROCEDURE. (See F3–103 KOEO/KOER SELF-TEST PROCEDURE.) • Are there any KOEO DTCs present?	Yes	Repair KOEO DTC. (See F3–104 DTC TABLE)
		No	Go to next step.
4	**PERFORM KEY ON ENGINE RUNNING (KOER) SELF-TEST** • Start engine. • Perform KOER SELF-TEST PROCEDURE. (See F3–103 KOEO/KOER SELF-TEST PROCEDURE.) • Are there any KOER DTCs present?	Yes	Repair KOER DTC. (See F3–104 DTC TABLE)
		No	• If Continuous Memory DTC is present at Step 1, return to applicable DTC troubleshooting procedure step. • If Continuous Memory DTC is not present at Step 1, go to symptom troubleshooting.

End Of Ste

KOEO/KOER SELF-TEST PROCEDURE

1. Connect WDS or equivalent to the vehicle DLC-2 16-pin connector located as shown in the figure.
2. Perform KOEO/KOER self-test.

AME417018881W19

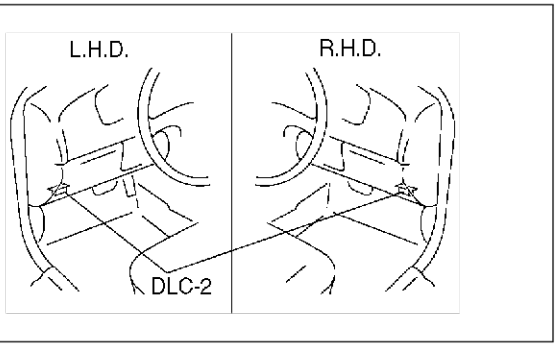

AME4270W001

End Of Ste

AFTER REPAIR PROCEDURE

1. Connect WDS or equivalent to the vehicle DLC-2 16-pin connector located as shown in the figure.
2. Turn the ignition key from OFF to ON.
3. Record DTC if retrieved.
4. Erase all diagnostic data using WDS or equivalent.

AME417018881W20

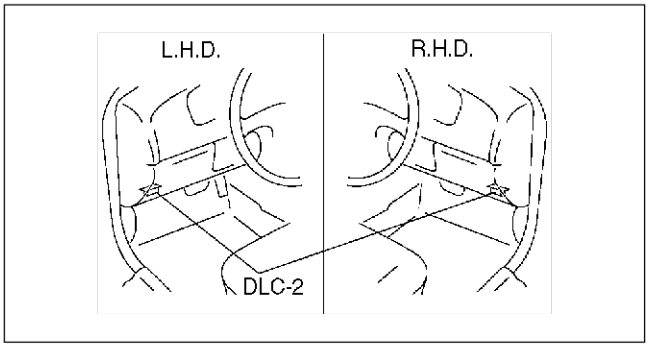

AME4270W001

End Of Sie

DTC TABLE

DTC table

AME417018881W21

×: Applicable
—: Not applicable

DTC No.	Condition	MIL	DC	Monitor item	Memory function	Page
P0031	Front HO2S heater circuit low input	ON	2	O_2 sensor heater	×	(See F3–106 DTC P0031)
P0032	Front HO2S heater circuit high input	ON	2	O_2 sensor heater	×	(See F3–108 DTC P0032)
P0037	Rear HO2S heater circuit low input	ON	2	O_2 sensor heater	×	(See F3–110 DTC P0037)
P0038	Rear HO2S heater circuit high input	ON	2	O_2 sensor heater	×	(See F3–112 DTC P0038)
P0101	MAF sensor inconsistent with TP sensor	ON	2	CCM	×	(See F3–114 DTC P0101)
P0102	MAF circuit low input	ON	1	CCM	×	(See F3–116 DTC P0102)
P0103	MAF circuit high input	ON	1	CCM	×	(See F3–118 DTC P0103)
P0107	MAP sensor circuit low input	ON	1	CCM	×	(See F3–120 DTC P0107)
P0108	MAP sensor circuit high input	ON	1	CCM	×	(See F3–122 DTC P0108)
P0111	IAT circuit performance problem	ON	2	CCM	×	(See F3–124 DTC P0111)
P0112	IAT circuit low input	ON	1	CCM	×	(See F3–126 DTC P0112)
P0113	IAT circuit high input	ON	1	CCM	×	(See F3–128 DTC P0113)
P0117	ECT circuit low input	ON	1	CCM	×	(See F3–130 DTC P0117)
P0118	ECT circuit high input	ON	1	CCM	×	(See F3–132 DTC P0118)
P0121	Throttle position stuck closed	ON	2	CCM	×	(See F3–134 DTC P0121)
P0122	TP circuit low input	ON	1	CCM	×	(See F3–138 DTC P0122)
P0123	TP circuit high input	ON	1	CCM	×	(See F3–106 DTC P0031)
P0125	Excessive time to enter closed loop fuel control	ON	2	CCM	×	(See F3–142 DTC P0125)
P0131	Front HO2S no inversion (low stuck)	ON	2	CCM	×	(See F3–143 DTC P0131, P0132)
P0132	Front HO2S no inversion (high stuck)	ON	2	CCM	×	
P0133	Front HO2S circuit malfunction	ON	2	O_2 sensor	×	(See F3–146 DTC P0133)
P0134	Front HO2S circuit no activity detected	ON	2	CCM	×	(See F3–148 DTC P0134)
P0138	Rear HO2S circuit high input	ON	2	CCM	×	(See F3–150 DTC P0138)
P0140	Rear HO2S circuit no activity detected	ON	2	CCM	×	(See F3–148 DTC P0134)
P0171	Fuel trim system too lean	ON	2	Fuel	×	(See F3–154 DTC P0171)
P0172	Fuel trim system too rich	ON	2	Fuel	×	(See F3–157 DTC P0172)
P0300	Random misfire detected	Flash / ON	1 or 2	Misfire	×	(See F3–158 DTC P0300)

DTC No.	Condition	MIL	DC	Monitor item	Memory function	Page
P0301	Cylinder No.1 misfire detected	Flash / ON	1 or 2	Misfire	×	(See F3–162 DTC P0301, P0302, P0303, P0304)
P0302	Cylinder No.2 misfire detected	Flash / ON	1 or 2	Misfire	×	
P0303	Cylinder No.3 misfire detected	Flash / ON	1 or 2	Misfire	×	
P0304	Cylinder No.4 misfire detected	Flash / ON	1 or 2	Misfire	×	
P0327	Knock sensor circuit low input	ON	1	CCM	×	(See F3–164 DTC P0327)
P0328	Knock sensor circuit high input	ON	1	CCM	×	(See F3–166 DTC P0328)
P0335	CKP sensor circuit malfunction	ON	1	CCM	×	(See F3–168 DTC P0335)
P0340	CMP sensor circuit malfunction	ON	1	CCM	×	(See F3–170 DTC P0340)
P0403	EGR valve motor coils open or short	ON	2	CCM	×	(See F3–172 DTC P0403)
P0420	Catalyst system efficiency below threshold	ON	2	Catalyst	×	(See F3–174 DTC P0420)
P0443	Evaporative emission control system purge control valve circuit malfunction	ON	2	CCM	×	(See F3–176 DTC P0443)
P0480	Fan control module circuit malfunction	OFF	2	Other	×	(See F3–178 DTC P0480)
P0500	Vehicle speed sensor (VSS) circuit malfunction	ON	2	CCM	×	(See F3–180 DTC P0500)
P0505	Idle control system malfunction	OFF	—	Other	—	(See F3–182 DTC P0505)
P0506	Idle control system RPM lower than expected	ON	2	CCM	×	(See F3–183 DTC P0506)
P0507	Idle control system RPM higher than expected	ON	2	CCM	×	(See F3–184 DTC P0507)
P0511	IAC valve circuit malfunction	ON	1	CCM	×	(See F3–186 DTC P0511)
P0550	PSP switch circuit malfunction	ON	2	CCM	×	(See F3–188 DTC P0550)
P0661	VIS control circuit low input	OFF	2	Other	×	(See F3–190 DTC P0661)
P0662	VIS control circuit high input	OFF	2	Other	×	(See F3–192 DTC P0662)
P0703	Brake switch input malfunction	ON	2	CCM	×	(See F3–194 DTC P0703)
P0704	Clutch switch input malfunction	ON	2	CCM	×	(See F3–196 DTC P0704)
P0850	Neutral switch input malfunction	ON	2	CCM	×	(See F3–198 DTC P0850)
P1562	PCM +BB voltage low	ON	1	CCM	×	(See F3–200 DTC P1562)
P1602	Immobilizer unit-PCM communication error	OFF	—	Other	×	(See F3–202 DTC P1602)
P1603	Key ID numbers are not registered in PCM	OFF	—	Other	×	(See F3–204 DTC P1603)
P1604	Code word is not registered in PCM	OFF	—	Other	×	(See F3–205 DTC P1604)
P1621	Code word does not match after engine cranking	OFF	—	Other	×	(See F3–205 DTC P1621)
P1622	Key ID number does not match	OFF	—	Other	×	(See F3–206 DTC P1622)
P1623	Code word or key ID number read/write error in PCM	OFF	—	Other	×	(See F3–206 DTC P1623)
P1624	Immobilizer system communication counter=0	OFF	—	Other	×	(See F3–207 DTC P1624)
P2006	VTCS shutter valve stuck closed	ON	2	CCM	×	(See F3–208 DTC P2006)
P2009	Variable tumble control solenoid circuit low input	ON	2	CCM	×	(See F3–210 DTC P2009)
P2010	Variable tumble control solenoid circuit high input	ON	2	CCM	×	(See F3–212 DTC P2010)
P2228	BARO sensor circuit low input	ON	1	CCM	×	(See F3–214 DTC P2228)
P2229	BARO sensor circuit high input	ON	1	CCM	×	(See F3–216 DTC P2229)
P2502	Generator output voltage signal no electricity	OFF	1	Other	×	(See F3–218 DTC P2502)
P2503	Battery overcharge	OFF	1	Other	×	(See F3–220 DTC P2503)
P2504	Generator terminal B circuit open	OFF	1	Other	×	(See F3–222 DTC P2504)

DTC P0031

AME417001084W01

DTC P0031	Front HO2S heater circuit low input
DETECTION CONDITION	• PCM monitors front HO2S heater control signal at PCM terminal 4A. If PCM turns front HO2S heater off but front HO2S heater circuit has low voltage, PCM determines that front HO2S heater circuit has a malfunction. **Note** • Front HO2S heater is controlled by duty signal. **Diagnostic support note** • This is an intermittent monitor (O_2 sensor heater). • MIL illuminates if PCM detects above malfunction condition in two consecutive drive cycles or in one drive cycle while DTC for the same malfunction has been stored in PCM. • PENDING CODE is available if PCM detects above malfunction condition during first drive cycle. • FREEZE FRAME DATA is available. • DTC is stored in PCM memory.
POSSIBLE CAUSE	• Front HO2S malfunction • Open circuit between ignition switch and front HO2S terminal C • Open circuit between front HO2S terminal D and PCM terminal 4A • Short to ground circuit between front HO2S terminal D and PCM terminal 4A • Poor connection at front HO2S or PCM connector • PCM malfunction

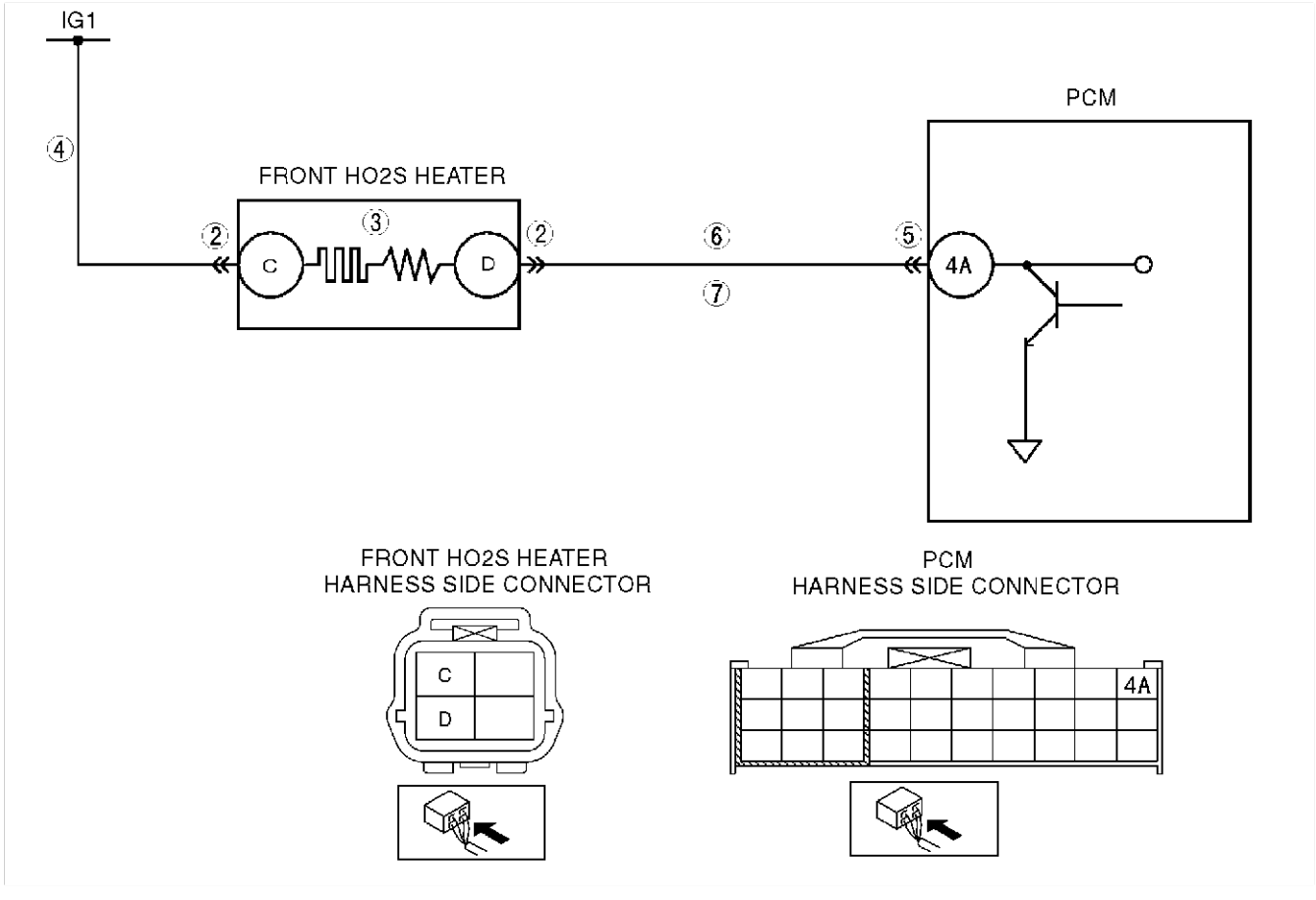

Diagnostic procedure

STEP	INSPECTION		ACTION
1	**PERFORM DTC CONFIRMATION PROCEDURE** • Perform DTC CONFIRMATION PROCEDURE. (See F3–103 DTC CONFIRMATION PROCEDURE.) • Is same DTC present?	Yes	Go to next step.
		No	Intermittent concern exists. Go to INTERMITTENT CONCERN TROUBLESHOOTING procedure. (See F3–270 INTERMITTENT CONCERN TROUBLESHOOTING.)
2	**INSPECT POOR CONNECTION OF FRONT HO2S CONNECTOR** • Turn ignition key to OFF. • Disconnect front HO2S connector. • Inspect for poor connection (damaged, pulled-out pins, corrosion, etc.). • Is there any malfunction?	Yes	Repair or replace terminal, then go to Step 8.
		No	Go to next step.
3	**INSPECT FRONT HO2S HEATER** • Inspect front HO2S heater. (See F3–94 HEATED OXYGEN SENSOR (HO2S) INSPECTION.) • Is front HO2S heater okay?	Yes	Go to next step.
		No	Replace front HO2S, then go to Step 8.
4	**INSPECT POWER CIRCUIT OF FRONT HO2S HEATER FOR OPEN CIRCUIT** • Turn ignition key to ON (Engine OFF). • Measure voltage between front HO2S terminal C (harness-side) and body ground. • Is voltage **B+**?	Yes	Go to next step.
		No	Repair or replace harness for open circuit, then go to Step 8.
5	**INSPECT POOR CONNECTION OF PCM CONNECTOR** • Turn ignition key to OFF. • Disconnect PCM connector. • Inspect for poor connection (damaged, pulled-out pins, corrosion, etc.). • Is there any malfunction?	Yes	Repair terminal, then go to Step 8.
		No	Go to next step.
6	**INSPECT CONTROL CIRCUIT OF FRONT HO2S HEATER FOR SHORT TO GROUND** • Inspect continuity between front HO2S terminal D (harness-side) and body ground. • Is there continuity?	Yes	Repair or replace harness for short to ground, then go to Step 8.
		No	Go to next step.
7	**INSPECT CONTROL CIRCUIT OF FRONT HO2S HEATER FOR OPEN CIRCUIT** • Inspect continuity between front HO2S terminal D (harness-side) and PCM terminal 4A. • Is there continuity?	Yes	Go to next step.
		No	Repair or replace harness for open circuit, then go to Step 8.
8	**VERIFY TROUBLESHOOTING OF DTC P0031 COMPLETED** • Make sure to reconnect all disconnected connectors. • Clear DTC from PCM memory using WDS or equivalent. • Perform KOEO/KOER self-test. (See F3–103 KOEO/KOER SELF-TEST PROCEDURE.) • Is same DTC present?	Yes	Replace PCM, then go to next step. (See F3–81 PCM REMOVAL/INSTALLATION.)
		No	Go to next step.
9	**VERIFY AFTER REPAIR PROCEDURE** • Perform “After Repair Procedure”. (See F3–104 AFTER REPAIR PROCEDURE.) • Is there any DTC present?	Yes	Go to applicable DTC troubleshooting. (See F3–104 DTC TABLE.)
		No	Troubleshooting completed.

End Of Ste

DTC P0032

AME417001084W02

DTC P0032	Front HO2S heater circuit high input
DETECTION CONDITION	• PCM monitors front HO2S heater control signal at PCM terminal 4A. If PCM turns front HO2S heater on but front HO2S heater circuit has high voltage, PCM determines that front HO2S heater circuit has malfunction. **Note** • Front HO2S heater is controlled by a duty signal. **Diagnostic support note** • This is an intermittent monitor (O_2 sensor heater). • MIL illuminates if PCM detects the above malfunction condition in two consecutive drive cycles or in one drive cycle while the DTC for the same malfunction has been stored in the PCM. • PENDING CODE is available if PCM detects the above malfunction condition. • FREEZE FRAME DATA is available. • DTC is stored in PCM memory.
POSSIBLE CAUSE	• Short to power circuit between front HO2S terminal D and PCM terminal 4A • Front HO2S or PCM terminal is shorted • Front HO2S heater malfunction • PCM malfunction

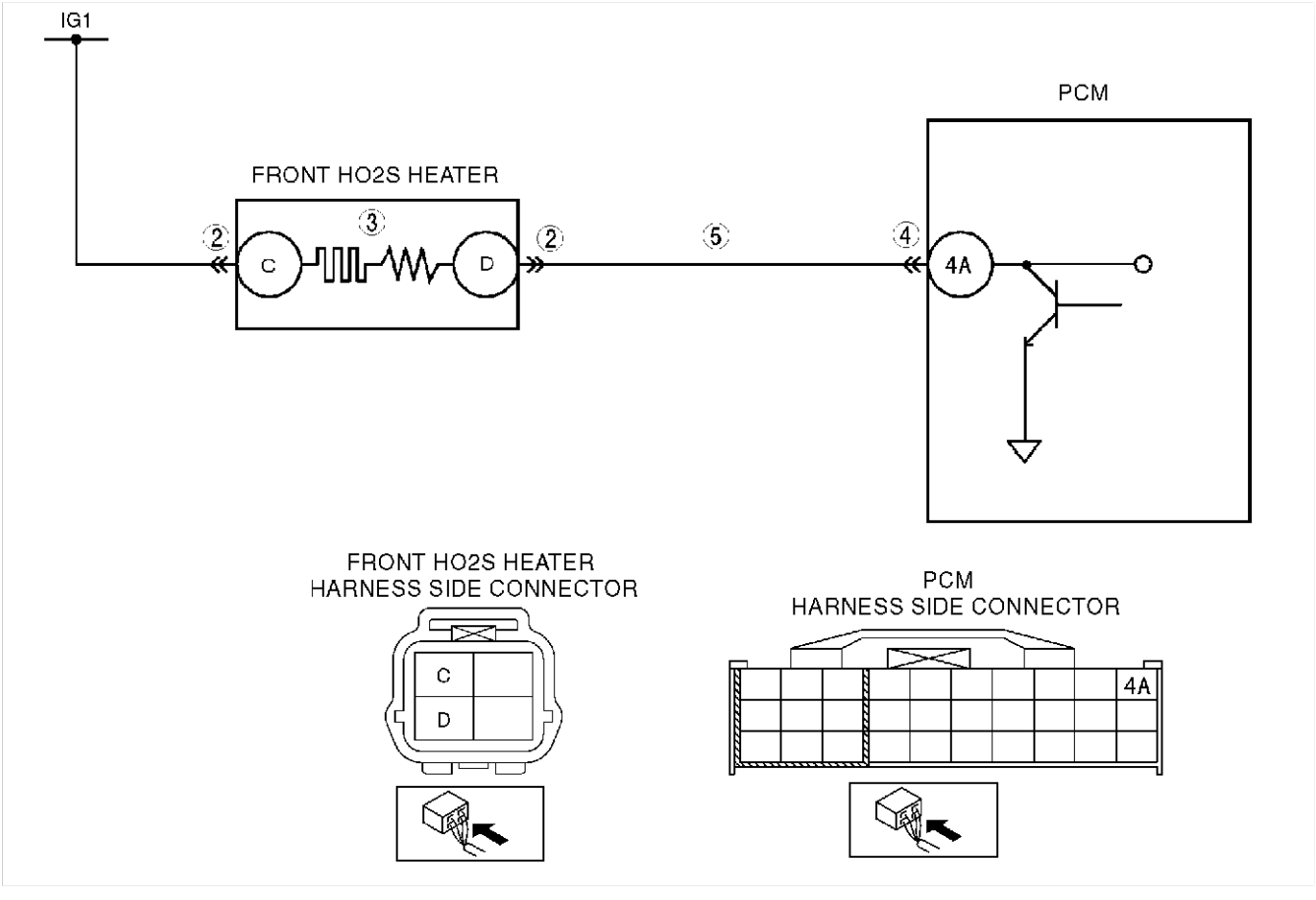

Diagnostic procedure

STEP	INSPECTION		ACTION
1	**PERFORM DTC CONFIRMATION PROCEDURE** • Perform DTC CONFIRMATION PROCEDURE. (See F3–103 DTC CONFIRMATION PROCEDURE.) • Is same DTC present?	Yes	Go to next step.
		No	Intermittent concern exists. Go to INTERMITTENT CONCERN TROUBLESHOOTING procedure. (See F3–270 INTERMITTENT CONCERN TROUBLESHOOTING.)
2	**INSPECT FRONT HO2S TERMINALS** • Turn ignition key to OFF. • Disconnect front HO2S connector. • Inspect for bent terminals. • Is there any malfunction?	Yes	Repair or replace terminal, then go to Step 6.
		No	Go to next step.
3	**INSPECT FRONT HO2S HEATER** • Inspect front HO2S heater. (See F3–94 HEATED OXYGEN SENSOR (HO2S) INSPECTION.) • Is front HO2S heater okay?	Yes	Go to next step.
		No	Replace the front HO2S, then go to Step 6.
4	**INSPECT PCM TERMINAL** • Disconnect PCM connector. • Inspect for bent terminals. • Is there any malfunction?	Yes	Repair terminal, then go to Step 6.
		No	Go to next step.
5	**INSPECT FRONT HO2S HEATER CONTROL CIRCUIT FOR SHORT TO POWER CIRCUIT** • Turn ignition key to ON (Engine OFF). • Measure voltage between front HO2S terminal D (harness-side) and body ground. • Is there voltage **B+**?	Yes	Repair or replace harness for shot to power circuit, then go to next step.
		No	Go to next step.
6	**VERIFY TROUBLESHOOTING OF DTC P0032 COMPLETED** • Make sure to reconnect all disconnected connectors. • Clear DTC from PCM memory using WDS or equivalent. • Perform KOEO/KOER self-test. (See F3–103 KOEO/KOER SELF-TEST PROCEDURE.) • Is same DTC present?	Yes	Replace PCM, then go to next step. (See F3–81 PCM REMOVAL/INSTALLATION.)
		No	Go to next step.
7	**VERIFY AFTER REPAIR PROCEDURE** • Perform “After Repair Procedure”. (See F3–104 AFTER REPAIR PROCEDURE.) • Is there any DTC present?	Yes	Go to applicable DTC troubleshooting. (See F3–104 DTC TABLE.)
		No	Troubleshooting completed.

End Of Ste

DTC P0037

AME417001084W03

DTC P0037	Rear HO2S heater circuit low input
DETECTION CONDITION	• PCM monitors rear HO2S heater control signal at PCM terminal 4D. If PCM turns rear HO2S heater off but rear HO2S heater circuit has low voltage, PCM determines that rear HO2S heater circuit has malfunction. **Diagnostic support note** • This is an intermittent monitor (O_2 sensor heater). • MIL illuminates if PCM detects the above malfunction condition in two consecutive drive cycles or in one drive cycle while DTC for the same malfunction has been stored in PCM. • PENDING CODE is available if PCM detects the above malfunction condition. • FREEZE FRAME DATA is available. • DTC is stored in PCM memory.
POSSIBLE CAUSE	• Rear HO2S malfunction • Open circuit between the ignition switch and rear HO2S terminal C • Open circuit between the rear HO2S terminal D and PCM terminal 4D • Short to ground circuit between rear HO2S terminal D and PCM terminal 4D • Poor connection at rear HO2S or PCM connector • PCM malfunction

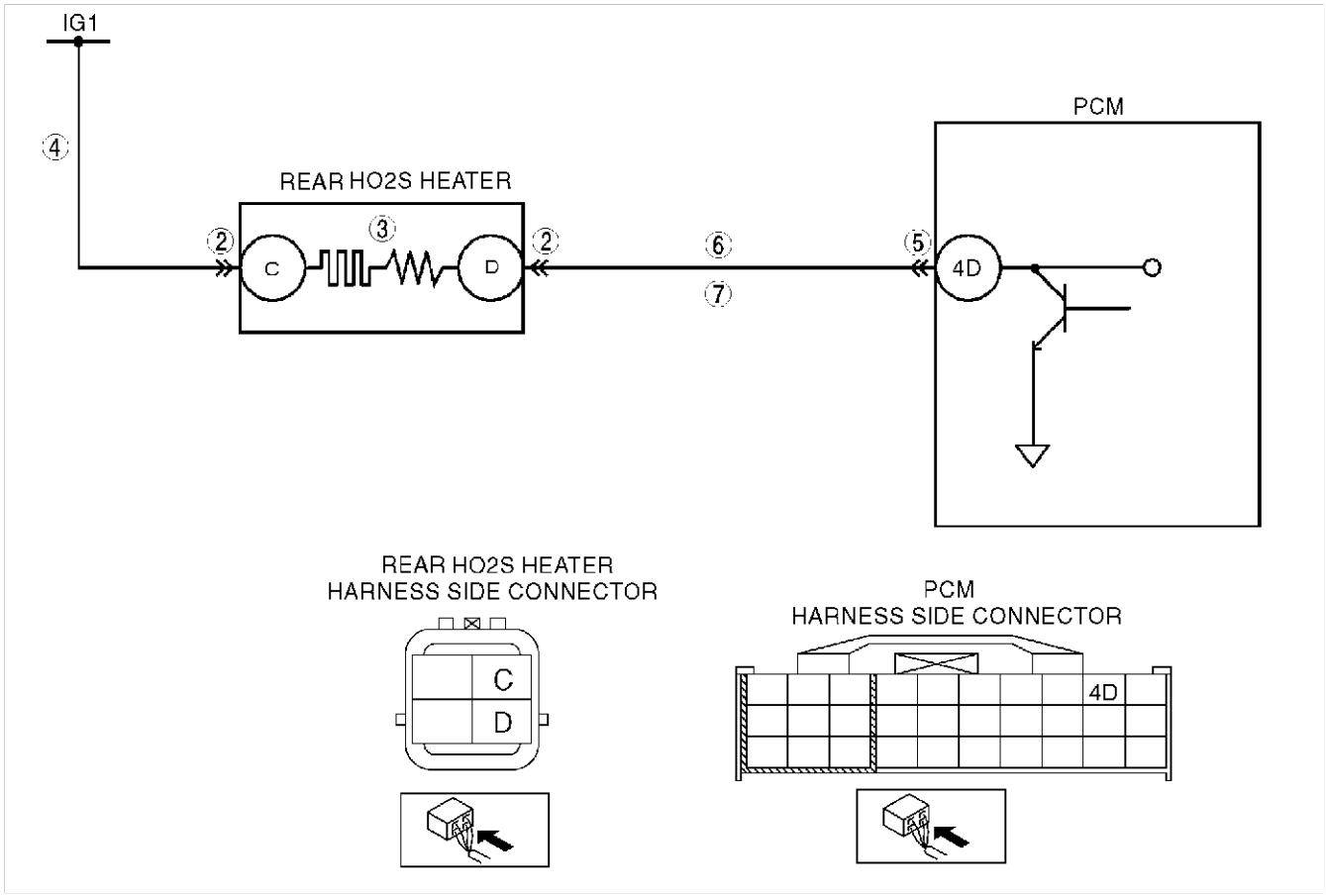

Diagnostic procedure

STEP	INSPECTION		ACTION
1	**PERFORM DTC CONFIRMATION PROCEDURE** • Perform DTC CONFIRMATION PROCEDURE. (See F3–103 DTC CONFIRMATION PROCEDURE.) • Is same DTC present?	Yes	Go to next step.
		No	Intermittent concern exists. Go to INTERMITTENT CONCERN TROUBLESHOOTING procedure. (See F3–270 INTERMITTENT CONCERN TROUBLESHOOTING.)
2	**INSPECT POOR CONNECTION OF REAR HO2S CONNECTOR** • Turn ignition key to OFF. • Disconnect rear HO2S connector. • Inspect for poor connection (damaged, pulled-out pins, corrosion, etc.). • Is there any malfunction?	Yes	Repair or replace terminal, then go to Step 8.
		No	Go to next step.
3	**INSPECT REAR HO2S HEATER** • Inspect rear HO2S heater. (See F3–94 HEATED OXYGEN SENSOR (HO2S) INSPECTION.) • Is rear HO2S heater okay?	Yes	Go to next step.
		No	Replace rear HO2S, then go to Step 8.
4	**INSPECT REAR HO2S HEATER POWER CIRCUIT FOR OPEN CIRCUIT** • Turn ignition key to ON (Engine OFF). • Measure voltage between rear HO2S terminal C (harness-side) and body ground. • Is voltage **B+**?	Yes	Go to next step.
		No	Repair or replace harness for open circuit, then go to Step 8.
5	**INSPECT POOR CONNECTION OF PCM CONNECTOR** • Turn ignition key to OFF. • Disconnect PCM connector. • Inspect for poor connection (damaged, pulled-out pins, corrosion, etc.). • Is there any malfunction?	Yes	Repair terminal, then go to Step 8.
		No	Go to next step.
6	**INSPECT REAR HO2S HEATER CONTROL CIRCUIT FOR SHORT TO GROUND** • Inspect continuity between rear HO2S terminal D (harness-side) and body ground. • Is there continuity?	Yes	Repair or replace harness for short to ground, then go to Step 8.
		No	Go to next step.
7	**INSPECT HREAR HO2S HEATER CONTROL CIRCUIT FOR OPEN CIRCUIT** • Inspect continuity between rear HO2S terminal D (harness-side) and PCM terminal 4D. • Is there continuity?	Yes	Go to next step.
		No	Repair or replace harness for open circuit, then go to Step 8.
8	**VERIFY TROUBLESHOOTING OF DTC P0037 COMPLETED** • Make sure to reconnect all disconnected connectors. • Clear DTC from PCM memory using WDS or equivalent. • Perform KOEO/KOER self-test. (See F3–103 KOEO/KOER SELF-TEST PROCEDURE.) • Is same DTC present?	Yes	Replace PCM, then go to next step. (See F3–81 PCM REMOVAL/INSTALLATION.)
		No	Go to next step.
9	**VERIFY AFTER REPAIR PROCEDURE** • Perform “After Repair Procedure”. (See F3–104 AFTER REPAIR PROCEDURE.) • Is there any DTC present?	Yes	Go to applicable DTC troubleshooting. (See F3–104 DTC TABLE.)
		No	Troubleshooting completed.

End Of Ste

DTC P0038

AME417001084W04

DTC P0038	Rear HO2S heater circuit high input
DETECTION CONDITION	• PCM monitors rear HO2S heater control signal at PCM terminal 4D. If PCM turns rear HO2S heater on but rear HO2S heater circuit has high voltage, PCM determines that rear HO2S heater circuit has malfunction. **Diagnostic support note** • This is an intermittent monitor (O_2 sensor heater). • MIL illuminates if PCM detects the above malfunction condition in two consecutive drive cycles or in one drive cycle while the DTC for the same malfunction has been stored in the PCM. • PENDING CODE is available if PCM detects the above malfunction condition. • FREEZE FRAME DATA is available. • DTC is stored in PCM memory.
POSSIBLE CAUSE	• Short to power circuit between rear HO2S terminal D and PCM terminal 4D • Rear HO2S or PCM terminal is shorted • PCM malfunction • Rear HO2S malfunction

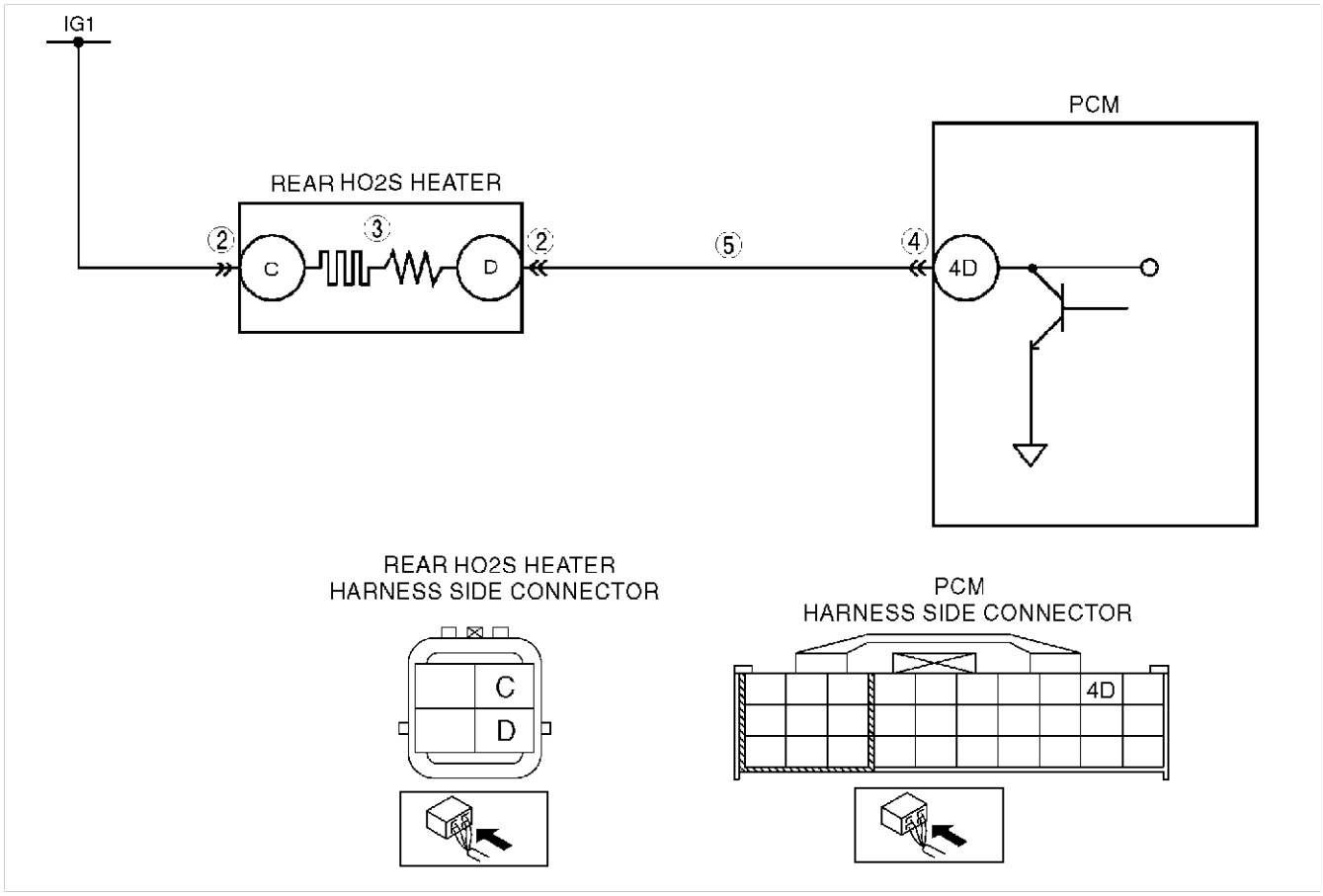

Diagnostic procedure

STEP	INSPECTION		ACTION
1	**PERFORM DTC CONFIRMATION PROCEDURE** • Perform DTC CONFIRMATION PROCEDURE. (See F3–103 DTC CONFIRMATION PROCEDURE.) • Is same DTC present?	Yes	Go to next step.
		No	Intermittent concern exists. Go to INTERMITTENT CONCERN TROUBLESHOOTING procedure. (See F3–270 INTERMITTENT CONCERN TROUBLESHOOTING.)
2	**INSPECT REAR HO2S TERMINAL** • Turn ignition key to OFF. • Disconnect rear HO2S connector. • Check for bent terminals • Is there any malfunction?	Yes	Repair or replace terminal, then go to Step 6.
		No	Go to next step.
3	**INSPECT REAR HO2S HEATER** • Inspect rear HO2S heater. (See F3–94 HEATED OXYGEN SENSOR (HO2S) INSPECTION.) • Is rear HO2S heater okay?	Yes	Go to next step.
		No	Replace the rear HO2S, then go to Step 6.
4	**INSPECT PCM TERMINAL** • Disconnect PCM connector. • Check for bent terminals. • Is there any malfunction?	Yes	Repair terminal, then go to Step 6.
		No	Go to next step.
5	**INSPECT REAR HO2S HEATER CONTROL CIRCUIT FOR SHORT TO POWER** • Turn ignition key to ON (Engine OFF). • Measure voltage between rear HO2S terminal D (harness-side) and body ground. • Is voltage **B+**?	Yes	Repair or replace harness for shot to power circuit, then go to next step.
		No	Go to next step.
6	**VERIFY TROUBLESHOOTING OF DTC P0038 COMPLETED** • Make sure to reconnect all disconnected connectors. • Clear DTC from PCM memory using WDS or equivalent. • Perform KOEO/KOER self-test. (See F3–103 KOEO/KOER SELF-TEST PROCEDURE.) • Is same DTC present?	Yes	Replace PCM, then go to next step. (See F3–81 PCM REMOVAL/INSTALLATION.)
		No	Go to next step.
7	**VERIFY AFTER REPAIR PROCEDURE** • Perform “After Repair Procedure”. (See F3–104 AFTER REPAIR PROCEDURE.) • Is there any DTC present?	Yes	Go to applicable DTC troubleshooting. (See F3–104 DTC TABLE.)
		No	Troubleshooting completed.

End Of Ste

DTC P0101

AME417001084W05

DTC P0101	**MAF sensor inconsistent with TP sensor (lower than expected) or engine speed (greater than expected)**
DETECTION CONDITION	• The PCM compares actual input signal from MAF sensor with expected input signal from MAF sensor (calculated by input voltage from throttle position sensor or engine speed). — If mass intake air flow amount is **below 4.8 g/sec. {0.63 lb/min.}** for **5 s** and throttle opening angle is **above 50%** with engine running, the PCM determines that detected mass intake air flow amount is too low. — If mass intake air flow amount is **above 66.5 g/sec. {8.8 lb/min.}** for **5 s** and engine speed is **below 2,000 rpm** with engine running, the PCM determines that detected mass intake air flow amount is too high. **Diagnostic support note** • This is a continuous monitor (CCM). • MIL illuminates if PCM detects the above malfunction condition in two consecutive drive cycles or in one drive cycle while the DTC for the same malfunction has been stored in the PCM. • PENDING CODE is available if PCM detects the above malfunction condition during first drive cycle. • FREEZE FRAME DATA is available. • DTC is stored in the PCM memory.
POSSIBLE CAUSE	• MAF sensor malfunction • TP sensor malfunction • Electrical corrosion in MAF signal circuit • Electrical corrosion in MAF RETURN circuit • Voltage drops in MAF signal circuit • Voltage drops in ground circuit

Diagnostic procedure

STEP	INSPECTION		ACTION
1	**VERIFY FREEZE FRAME DATA HAS BEEN RECORDED** • Has FREEZE FRAME DATA been recorded?	Yes	Go to next step.
		No	Record FREEZE FRAME DATA on repair order, then go to next step.
2	**VERIFY RELATED SERVICE INFORMATION AVAILABILITY** • Check for related Service Information availability. • Is any related Service Information available?	Yes	Perform repair or diagnosis according to available Service Information. • If vehicle is not repaired, go to next step.
		No	Go to next step.
3	**VERIFY CURRENT INPUT SIGNAL STATUS-IS CONCERN INTERMITTENT OR CONSTANT** • Connect WDS or equivalent to DLC-2. • Start the engine. • Access ECT, TP and MAF PIDs. • Warm up the engine until ECT PID is **above 80 °C {176 °F}**. • Drive the vehicle. • Read MAF PID while TP PID is **above 50%**. • Is MAF PID reading **below 4.8 g/s {0.63 lb/min.}**?	Yes	Make sure that throttle position sensor resistance changes smoothly while gradually opening throttle valve. • If not, replace throttle position sensor and go to Step 7. • For others, go to next step.
		No	Go to next step.
4	**VERIFY CURRENT INPUT SIGNAL STATUS-IS CONCERN INTERMITTENT OR CONSTANT** • Connect WDS or equivalent to DLC-2. • Start the engine. • Access ECT, MAF and RPM PIDs. • Warm up engine until ECT PID is **above 80°C {176 °F}**. • Read MAF PID while RPM PID is **below 2,000 rpm**. • Is MAF PID reading above **66.5 g/s {8.8 lb/min.}**?	Yes	Go to Step 8.
		No	Intermittent concern exists. Go to INTERMITTENT CONCERNS TROUBLESHOOTING procedure. (See F3–270 INTERMITTENT CONCERN TROUBLESHOOTING.)

STEP	INSPECTION		ACTION
5	**INSPECT POOR CONNECTION OF MAF SENSOR CONNECTOR** • Turn ignition key to OFF. • Disconnect MAF/IAT sensor connector. • Inspect for poor connection (damaged, pulled-out terminals, corrosion, etc.). • Is there any malfunction?	Yes	Repair or replace suspected terminal or MAF/IAT sensor, then go to Step 7.
		No	Go to next step.
6	**INSPECT POOR CONNECTION OF PCM CONNECTOR** • Disconnect PCM connector. • Inspect for poor connection (damaged/pulled-out pins, corrosion, etc.). • Is there any malfunction?	Yes	Repair terminal, then go to next step.
		No	Replace MAF/IAT sensor, then go to next step.
7	**VERIFY TROUBLESHOOTING OF DTC P0101 COMPLETED** • Make sure to reconnect all disconnected connectors. • Turn ignition key to ON (Engine OFF). • Clear DTC from memory using WDS or equivalent. • Start the engine. • Access ECT, TP and RPM PIDs. • Warm up the engine until ECT PID is reading **above 80°C {176°F}**. • Drive the vehicle while TP PID **above 50%** for **50 s**. • Is same DTC present?	Yes	Replace PCM, then go to Step 11.
		No	Go to Step 11.
8	**CHECK MAF SENSOR TERMINALS FOR ELECTRICAL CORROSION** • Turn ignition key to OFF. • Disconnect MAF/IAT sensor connector. • Inspect for poor connection (damaged, pulled-out terminals, corrosion, etc.). • Is any corrosion problem found?	Yes	Repair or replace suspected terminal or MAF/IAT sensor, then go to Step 10.
		No	Go to next step.
9	**INSPECT POOR CONNECTION OF PCM CONNECTOR** • Disconnect PCM connector. • Inspect for poor connection (damaged, pulled-out pins, corrosion, etc.). • Is there any malfunction?	Yes	Repair terminal, then go to next step.
		No	Go to next step.
10	**VERIFY TROUBLESHOOTING OF DTC P0101 COMPLETED** • Make sure to reconnect all disconnected connectors. • Turn ignition key to ON (Engine OFF). • Clear DTC from memory using WDS or equivalent. • Start the engine. • Warm up engine until ECT PID is **above 80 °C {176 °F}**. • Drive the vehicle while RPM PID is **2,000 rpm** for **50 s**. • Is PENDING CODE of same DTC present?	Yes	Replace PCM, then go to next step. (See F3–81 PCM REMOVAL/INSTALLATION.)
		No	Go to next step.
11	**VERIFY AFTER REPAIR PROCEDURE** • Perform “After Repair Procedure”. (See F3–104 AFTER REPAIR PROCEDURE.) • Is there any DTC present?	Yes	Go to applicable DTC troubleshooting. (See F3–104 DTC TABLE.)
		No	Troubleshooting completed.

End Of Sec

DTC P0102

AME417001084W06

DTC P0102	MAF circuit low input
DETECTION CONDITION	• PCM monitors input voltage from MAF sensor when engine is running. If input voltage at PCM terminal 1P is **below 0.21 V**, PCM determines that MAF circuit has malfunction. **Diagnostic support note** • This is a continuous monitor (CCM). • MIL illuminates if PCM detects the above malfunction condition during first drive cycle. • PENDING CODE is available if PCM detects the above malfunction condition. • FREEZE FRAME DATA is available. • DTC is stored in the PCM memory.
POSSIBLE CAUSE	• MAF sensor malfunction • Connector or terminal malfunction • Short to ground in wiring between MAF/IAT sensor terminal C and PCM terminal 1P • Open circuit in wiring between MAF/IAT sensor terminal C and PCM terminal 1P • Open circuit in wiring between main relay and MAF/IAT sensor terminal A

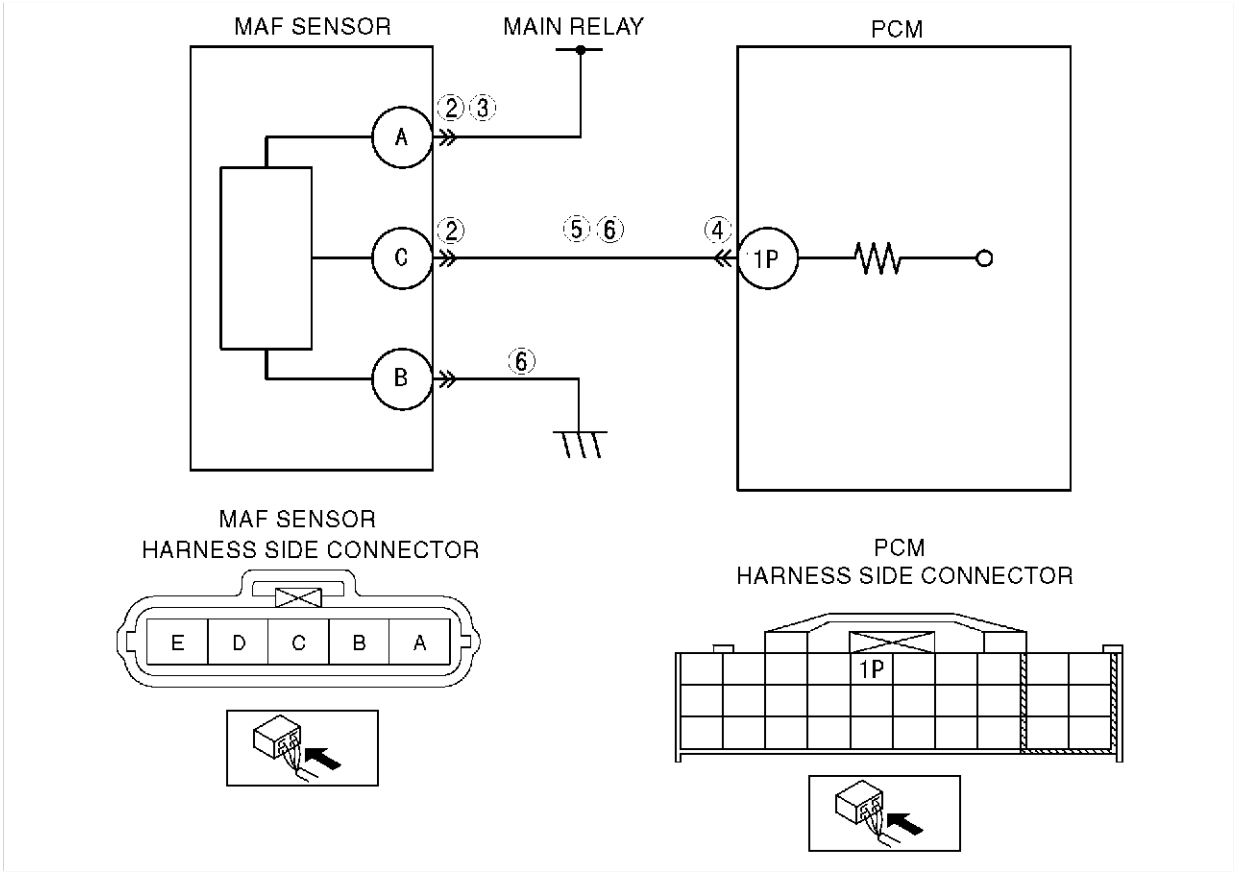

Diagnostic procedure

STEP	INSPECTION		ACTION
1	**PERFORM DTC CONFIRMATION PROCEDURE** • Perform DTC CONFIRMATION PROCEDURE. (See F3–103 DTC CONFIRMATION PROCEDURE.) • Is same DTC present?	Yes	Go to next step.
		No	Intermittent concern exists. Go to INTERMITTENT CONCERN TROUBLESHOOTING procedure. (See F3–270 INTERMITTENT CONCERN TROUBLESHOOTING.)

STEP	INSPECTION		ACTION
2	**INSPECT POOR CONNECTION OF MAF SENSOR CONNECTOR** • Turn ignition key to OFF. • Disconnect the MAF/IAT sensor connector. • Inspect for poor connection (damaged, pulled-out terminals, corrosion, etc.). • Is there any malfunction?	Yes	Repair or replace terminals, then go to Step 7.
		No	Go to next step.
3	**CHECK POWER SUPPLY CIRCUIT FOR OPEN CIRCUIT** • Turn ignition key to ON (Engine OFF). • Inspect voltage at MAF/IAT sensor terminal B (harness-side). • Is voltage **B+**?	Yes	Go to next step.
		No	Inspect for open circuit in wiring harness between MAF/IAT sensor terminal B (harness-side) and main relay. Repair or replace harness, then go to Step 7.
4	**INSPECT POOR CONNECTION OF PCM CONNECTOR** • Turn ignition key to OFF. • Disconnect PCM connector. • Inspect for poor connection (damaged, pulled-out terminals, corrosion, etc.). • Is there any malfunction?	Yes	Repair terminal, then go to Step 7.
		No	Go to next step.
5	**INSPECT MAF SENSOR SIGNAL CIRCUIT FOR OPEN CIRCUIT** • Remove PCM with PCM connector connected. • Inspect for continuity between MAF/IAT sensor terminal C (harness-side) and PCM terminal 1P (harness-side). • Is there continuity?	Yes	Go to next step.
		No	Repair or replace suspected harness, then go to Step 7.
6	**INSPECT MAF SENSOR SIGNAL CIRCUIT FOR SHORTS** • Inspect continuity between following circuits: — MAF/IAT sensor terminal C (harness-side) and body ground — MAF/IAT sensor connector terminal C (harness-side) and B (harness-side) • Is there continuity?	Yes	Repair or replace suspected harness, then go to next step.
		No	Replace MAF/IAT sensor, then go to next step.
7	**VERIFY TROUBLESHOOTING OF DTC P0102 COMPLETED** • Make sure to reconnect all disconnected connectors. • Clear DTC from memory using WDS or equivalent. • Perform KOEO/KOER self-test. (See F3–103 KOEO/KOER SELF-TEST PROCEDURE.) • Is same DTC present?	Yes	Replace PCM, then go to next step. (See F3–81 PCM REMOVAL/INSTALLATION.)
		No	Go to next step.
8	**VERIFY AFTER REPAIR PROCEDURE** • Perform “After Repair Procedure”. (See F3–104 AFTER REPAIR PROCEDURE.) • Is there any DTC present?	Yes	Go to applicable DTC troubleshooting. (See F3–104 DTC TABLE.)
		No	Troubleshooting completed.

End Of Sie

DTC P0103

AME417001084W07

DTC P0103	MAF circuit high input
DETECTION CONDITION	• PCM monitors input voltage from MAF sensor when engine is running. If input voltage at PCM terminal 1P is **above 4.9 V**, PCM determines that MAF circuit has malfunction. **Diagnostic support note** • This is a continuous monitor (CCM). • MIL illuminates if PCM detects the above malfunction condition during first drive cycle. • PENDING CODE is available if PCM detects the above malfunction condition. • FREEZE FRAME DATA is available. • DTC is stored in the PCM memory.
POSSIBLE CAUSE	• MAF sensor malfunction • Connector or terminal malfunction • Short to power in wiring between MAF/IAT sensor terminal C and PCM terminal 1P • Open circuit in MAF/IAT sensor ground circuit

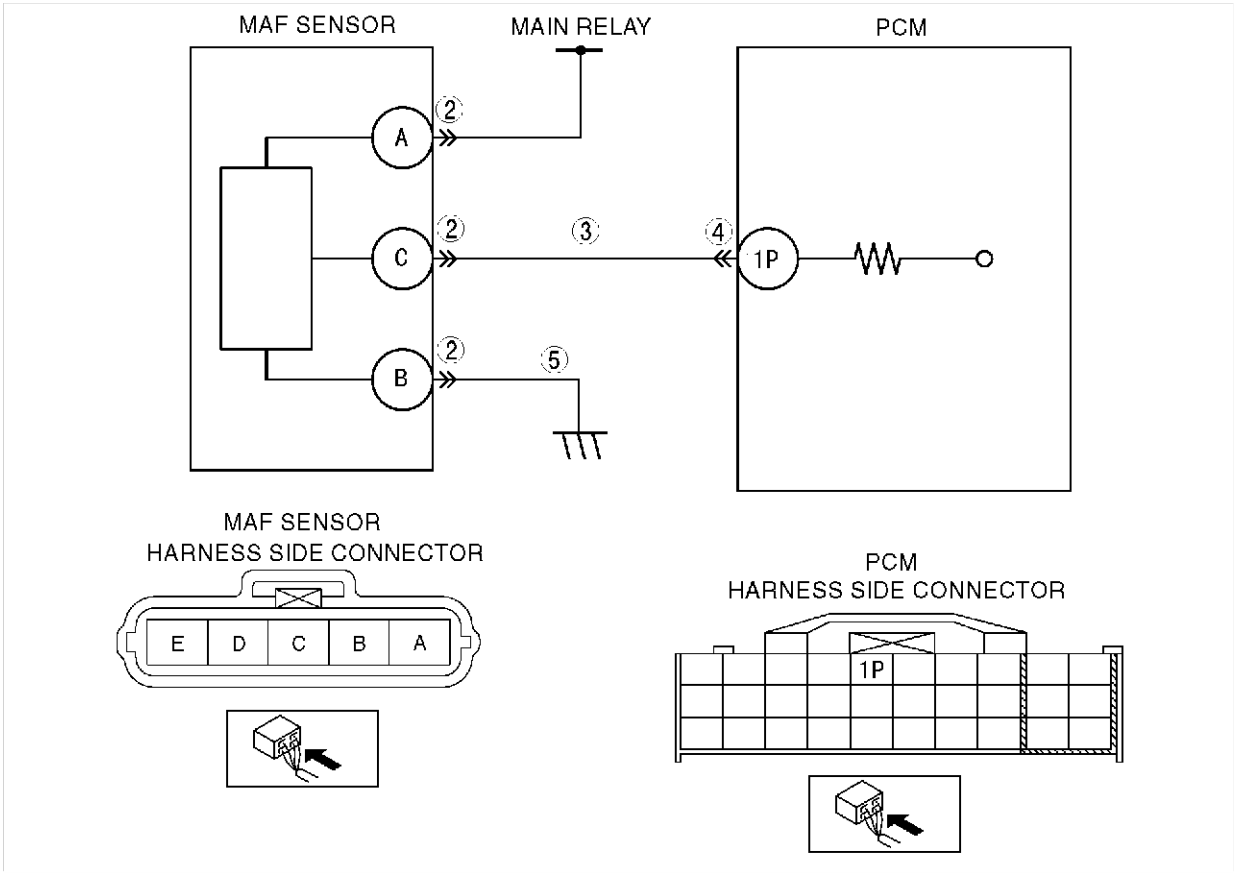

Diagnostic procedure

STEP	INSPECTION		ACTION
1	**PERFORM DTC CONFIRMATION PROCEDURE** • Perform DTC CONFIRMATION PROCEDURE. (See F3–103 DTC CONFIRMATION PROCEDURE.) • Is same DTC present?	Yes	Go to next step.
		No	Intermittent concern exists. Go to INTERMITTENT CONCERN TROUBLESHOOTING procedure. (See F3–270 INTERMITTENT CONCERN TROUBLESHOOTING.)
2	**INSPECT POOR CONNECTION OF MAF SENSOR CONNECTOR** • Turn ignition key to OFF. • Disconnect the MAF/IAT sensor connector. • Inspect for poor connection (damaged, pulled-out terminals, corrosion, etc.). • Is there any malfunction?	Yes	Repair or replace terminals, then go to Step 6.
		No	Go to next step.
3	**INSPECT MAF SIGNAL CIRCUIT FOR SHORT TO POWER CIRCUIT** • Turn ignition key to ON (Engine OFF). • Measure voltage between MAF/IAT sensor terminal C (harness-side) and body ground. • Is voltage **0 V**?	Yes	Go to next step.
		No	Repair or replace suspected harness, then go to Step 6.
4	**INSPECT POOR CONNECTION OF PCM CONNECTOR** • Turn ignition key to OFF. • Disconnect PCM connector. • Inspect for poor connection (damaged, pulled-out terminals, corrosion, etc.). • Is there any malfunction?	Yes	Repair terminal, then go to Step 6.
		No	Go to next step.
5	**INSPECT MAF SENSOR GROUND CIRCUIT FOR OPEN** • Remove PCM with PCM connector connected. • Inspect for continuity between MAF/IAT sensor terminal B (harness-side) and GND. • Is there continuity?	Yes	Replace MAF/IAT sensor, then go to next step.
		No	Repair or replace suspected harness, then go to next step.
6	**VERIFY TROUBLESHOOTING OF DTC P0103 COMPLETED** • Make sure to reconnect all disconnected connectors. • Clear DTC from memory using WDS or equivalent. • Perform KOEO/KOER self-test. (See F3–103 KOEO/KOER SELF-TEST PROCEDURE.) • Is same DTC present?	Yes	Replace PCM, then go to next step. (See F3–81 PCM REMOVAL/INSTALLATION.)
		No	Go to next step.
7	**VERIFY AFTER REPAIR PROCEDURE** • Perform “After Repair Procedure”. (See F3–104 AFTER REPAIR PROCEDURE.) • Is there any DTC present?	Yes	Go to applicable DTC troubleshooting. (See F3–104 DTC TABLE.)
		No	Troubleshooting completed.

End Of Ste

DTC P0107

AME417001084W08

DTC P0107	MAP sensor circuit low input
DETECTION CONDITION	• PCM monitors input voltage from MAP sensor when intake air temperature is **above 10 °C {50 °F}**. If input voltage at PCM terminal 1J is **below 0.01 V**, PCM determines that MAP sensor circuit has malfunction. **Diagnostic support note** • This is a continuous monitor (CCM). • MIL illuminates if PCM detects the above malfunction condition during first drive cycle. • PENDING CODE is available if PCM detects the above malfunction condition. • FREEZE FRAME DATA is available. • DTC is stored in the PCM memory.
POSSIBLE CAUSE	• MAP sensor malfunction • Connector or terminal malfunction • Short to ground in wiring between MAP sensor terminal D and PCM terminal 1J • Open circuit in wiring between MAP sensor terminal C and PCM terminal 2K • MAP sensor signal circuit and MAP sensor ground circuit are shorted each other • PCM malfunction

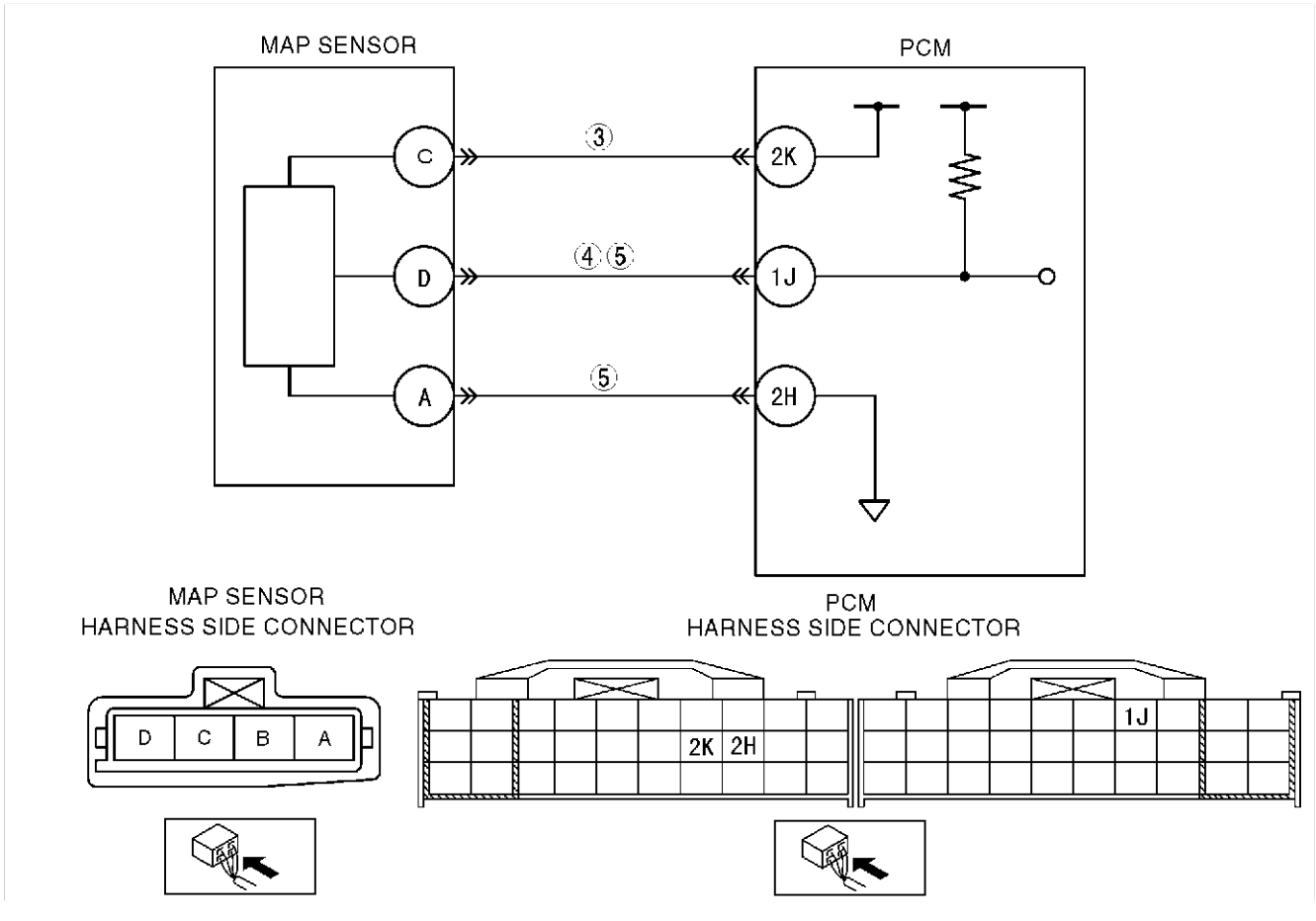

Diagnostic procedure

STEP	INSPECTION		ACTION
1	**PERFORM DTC CONFIRMATION PROCEDURE** • Perform DTC CONFIRMATION PROCEDURE. (See F3–103 DTC CONFIRMATION PROCEDURE.) • Is same DTC present?	Yes	Go to next step.
		No	Intermittent concern exists. Go to INTERMITTENT CONCERN TROUBLESHOOTING procedure. (See F3–270 INTERMITTENT CONCERN TROUBLESHOOTING.)
2	**VERIFY MAP PID WHEN MAP SENSOR CONNECTOR IS DISCONNECTED** • Disconnect MAP sensor connector. • Is voltage **above 4.9 V**?	Yes	Go to next step.
		No	Go to step 4.
3	**CHECK POWER SUPPLY CIRCUIT VOLTAGE AT MAP SENSOR CONNECTOR** **Note** • If DTC P0122 and P2228 are also retrieved with P0107, go to CONSTANT VOLTAGE troubleshooting procedure. • Turn ignition key to ON (Engine OFF). • Measure voltage between MAP sensor terminal C (harness-side) and body ground. • Is voltage **within 4.5—5.5 V?**	Yes	Check for poor connection of MAP sensor terminal C (harness-side). • Repair or replace terminal if necessary. • If okay, replace MAP sensor. Then go to Step 6.
		No	Check for open circuit between PCM terminal 2K (harness-side) and MAP sensor terminal C (harness-side). Repair or replace suspected harness, then go to Step 6.
4	**INSPECT MAP SENSOR SIGNAL CIRCUIT FOR SHORT TO GROUND** • Turn ignition key to OFF. • Disconnect PCM connector. • Inspect continuity between MAP sensor terminal D (harness-side) and body ground. • Is there continuity?	Yes	Repair or replace suspected harness, then go to Step 6.
		No	Go to next step.
5	**INSPECT MAP SENSOR SIGNAL AND GROUND CIRCUIT FOR SHORT EACH OTHER** • Inspect continuity between MAP sensor terminals D and A (harness-side). • Is there continuity?	Yes	Repair or replace suspected harness, then go to next step.
		No	Go to next step.
6	**VERIFY TROUBLESHOOTING OF DTC P0107 COMPLETED** • Make sure to reconnect all disconnected connectors. • Turn ignition key to ON (Engine OFF). • Clear DTC from memory using WDS or equivalent. • Perform KOEO/KOER self-test. (See F3–103 KOEO/KOER SELF-TEST PROCEDURE.) • Is same DTC present?	Yes	Replace PCM, then go to next step. (See F3–81 PCM REMOVAL/INSTALLATION.)
		No	Go to next step.
7	**VERIFY AFTER REPAIR PROCEDURE** • Perform “After Repair Procedure”. (See F3–104 AFTER REPAIR PROCEDURE.) • Is there any DTC present?	Yes	Go to applicable DTC troubleshooting. (See F3–104 DTC TABLE.)
		No	Troubleshooting completed.

End Of Ste

DTC P0108

AME417001084W09

DTC P0108	MAP sensor circuit high input
DETECTION CONDITION	• PCM monitors input voltage from MAP sensor when intake air temperature is **above 10 °C {50 °F}**. If input voltage at PCM terminal 1J is **above 4.9 V**, PCM determines that MAP sensor circuit has malfunction. **Diagnostic support note** • This is a continuous monitor (CCM). • MIL illuminates if PCM detects the above malfunction condition during first drive cycle. • PENDING CODE is available if PCM detects the above malfunction condition. • FREEZE FRAME DATA is available. • DTC is stored in the PCM memory.
POSSIBLE CAUSE	• MAP sensor malfunction • Connector or terminal malfunction • Open circuit in wiring between MAP sensor terminal A and PCM terminal 2H • Open circuit in wiring between MAP sensor terminal D and PCM terminal 1J • MAP sensor signal circuit shorts to constant voltage supply circuit • PCM malfunction

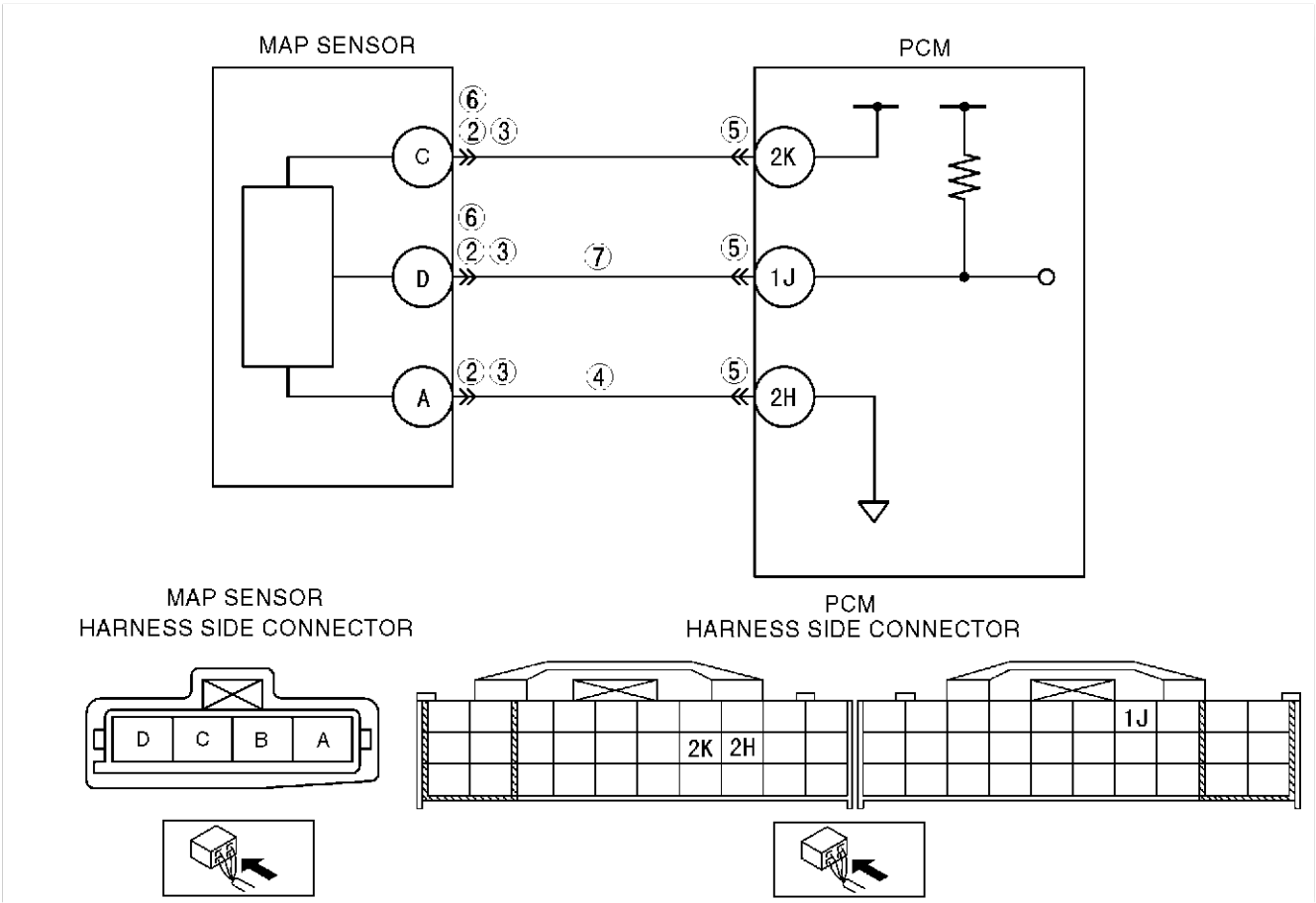

Diagnostic procedure

STEP	INSPECTION		ACTION
1	**PERFORM DTC CONFIRMATION PROCEDURE** • Perform DTC CONFIRMATION PROCEDURE. (See F3–103 DTC CONFIRMATION PROCEDURE.) • Is same DTC present?	Yes	Go to next step.
		No	Intermittent concern exists. Go to INTERMITTENT CONCERN TROUBLESHOOTING procedure. (See F3–270 INTERMITTENT CONCERN TROUBLESHOOTING.)

STEP	INSPECTION		ACTION
2	**INSPECT CONNECTION OF MAP SENSOR CONNECTOR** • Turn ignition key to OFF. • Verify that the MAP sensor connector is connected securely. • Is connection okay?	Yes	Go to next step.
		No	Reconnect the connector, then go to Step 8.
3	**INSPECT POOR CONNECTION OF MAP SENSOR CONNECTOR** • Disconnect the MAP sensor connector. • Inspect for poor connection (damaged, pulled-out pins, corrosion, etc.). • Is there any malfunction?	Yes	Repair or replace suspected terminal, then go to Step 8.
		No	Go to next step.
4	**VERIFY MAP SENSOR GROUND CIRCUIT FOR OPEN** • Inspect continuity between MAP sensor terminal A (harness-side) and body ground. • Is there continuity?	Yes	Go to next step.
		No	Inspect for open circuit between PCM terminal 2H (harness-side) and MAP sensor terminal A (harness-side). Repair or replace suspected harness, then go to Step 8.
5	**INSPECT PCM CONNECTOR** • Disconnect PCM connector. • Inspect for poor connection at terminal 2H (damaged, pulled-out pins, corrosion, etc.). • Is there any malfunction?	Yes	Repair terminal, then go to Step 8.
		No	Go to next step.
6	**VERIFY MAP SENSOR SIGNAL CIRCUIT FOR SHORT TO CONSTANT VOLTAGE CIRCUIT** • Inspect for continuity between MAP sensor terminal D and C (harness-side). • Is there continuity?	Yes	Repair or replace suspected harness, then go to Step 8.
		No	Go to next step.
7	**VERIFY MAP SENSOR SIGNAL CIRCUIT FOR OPEN** • Inspect continuity between MAP sensor terminal D (harness-side) and PCM terminal 1J (harness-side). • Is there continuity?	Yes	Go to next step.
		No	Repair or replace suspected harness, then go to next step.
8	**VERIFY TROUBLESHOOTING OF DTC P0108 COMPLETED** • Make sure to reconnect all disconnected connectors. • Turn ignition key to ON (Engine OFF). • Clear DTC from memory using WDS or equivalent. • Perform KOEO/KOER self-test. (See F3–103 KOEO/KOER SELF-TEST PROCEDURE.) • Is same DTC present?	Yes	Replace PCM, then go to next step. (See F3–81 PCM REMOVAL/INSTALLATION.)
		No	Go to next step.
9	**VERIFY AFTER REPAIR PROCEDURE** • Perform “After Repair Procedure”. (See F3–104 AFTER REPAIR PROCEDURE.) • Is there any DTC present?	Yes	Go to applicable DTC troubleshooting. (See F3–104 DTC TABLE.)
		No	Troubleshooting completed.

End Of Sie

DTC P0111

AME417001084W10

DTC P0111	IAT circuit performance problem
DETECTION CONDITION	• If intake air temperature is higher than engine coolant temperature by **40 °C {104 °F}** with ignition key ON, the PCM determines that there is a IAT sensor performance problem. **Diagnostic support note** • This is a continuous monitor (CCM). • MIL illuminates if PCM detects the above malfunction condition in two consecutive drive cycles or in one drive cycle while the DTC for the same malfunction has been stored in the PCM. • PENDING CODE is available if PCM detects the above malfunction condition during first drive cycle. • FREEZE FRAME DATA is available. • DTC is stored in PCM memory.
POSSIBLE CAUSE	• IAT sensor malfunction • Poor connection at MAF/IAT sensor or PCM connector • PCM malfunction

Diagnostic procedure

STEP	INSPECTION		ACTION
1	**VERIFY FREEZE FRAME DATA HAS BEEN RECORDED** • Has FREEZE FRAME DATA been recorded?	Yes	Go to next step.
		No	Record FREEZE FRAME DATA on repair order, then go to next step.
2	**VERIFY RELATED SERVICE INFORMATION AVAILABILITY** • Check for related Service Information availability. • Is any related Service Information available?	Yes	Perform repair or diagnosis according to available Service Information. • If vehicle is not repaired, go to next step.
		No	Go to next step.
3	**INSPECT POOR CONNECTION OF MAF/IAT SENSOR CONNECTOR** • Turn ignition key to OFF. • Disconnect MAF/IAT sensor connector. • Inspect for poor connection (damaged, pulled-out pins, corrosion, etc.). • Is there any malfunction?	Yes	Repair or replace terminal, then go to Step 6.
		No	Go to next step.

STEP	INSPECTION		ACTION
4	**INSPECT IAT SENSOR** • Inspect IAT sensor. (See F3–87 INTAKE AIR TEMPERATURE (IAT) SENSOR INSPECTION.) • Is IAT sensor okay?	Yes	Replace MAF/IAT sensor, then go to Step 6.
		No	Go to next step.
5	**INSPECT POOR CONNECTION OF PCM CONNECTOR** • Disconnect PCM connector. • Inspect for poor connection (damaged, pulled-out pins, corrosion, etc.). • Is there any malfunction?	Yes	Repair or replace terminal, then go to Step 6.
		No	Go to next step.
6	**VERIFY TROUBLESHOOTING OF DTC P0111 COMPLETED** • Make sure to reconnect all disconnected connectors. • Clear DTC from PCM memory using WDS or equivalent. • Start engine and run engine under FREEZE FRAME DATA condition. • Is PENDING CODE of same DTC present?	Yes	Replace PCM, then go to next step. (See F3–81 PCM REMOVAL/INSTALLATION.)
		No	Go to next step.
7	**VERIFY AFTER REPAIR PROCEDURE** • Perform “After Repair Procedure”. (See F3–104 AFTER REPAIR PROCEDURE.) • Is there any DTC present?	Yes	Go to applicable DTC troubleshooting. (See F3–104 DTC TABLE.)
		No	Troubleshooting completed.

End Of Ste

DTC P0112

AME417001084W11

DTC P0112	IAT circuit low input
DETECTION CONDITION	• PCM monitors IAT sensor signal at PCM terminal 2E. If PCM detects IAT sensor voltage **below 0.15 V**, the PCM determines that IAT sensor circuit has malfunction. **Diagnostic support note** • This is a continuous monitor (CCM). • MIL illuminates if PCM detects the above malfunction condition during first drive cycle. • PENDING CODE is available if PCM detects the above malfunction condition. • FREEZE FRAME DATA is available. • DTC is stored in the PCM memory.
POSSIBLE CAUSE	• IAT sensor malfunction • Connector or terminal malfunction • Short to ground circuit between MAF/IAT sensor terminal D and PCM terminal 2E • Short each harness IAT signal circuit and IAT ground circuit. • PCM malfunction

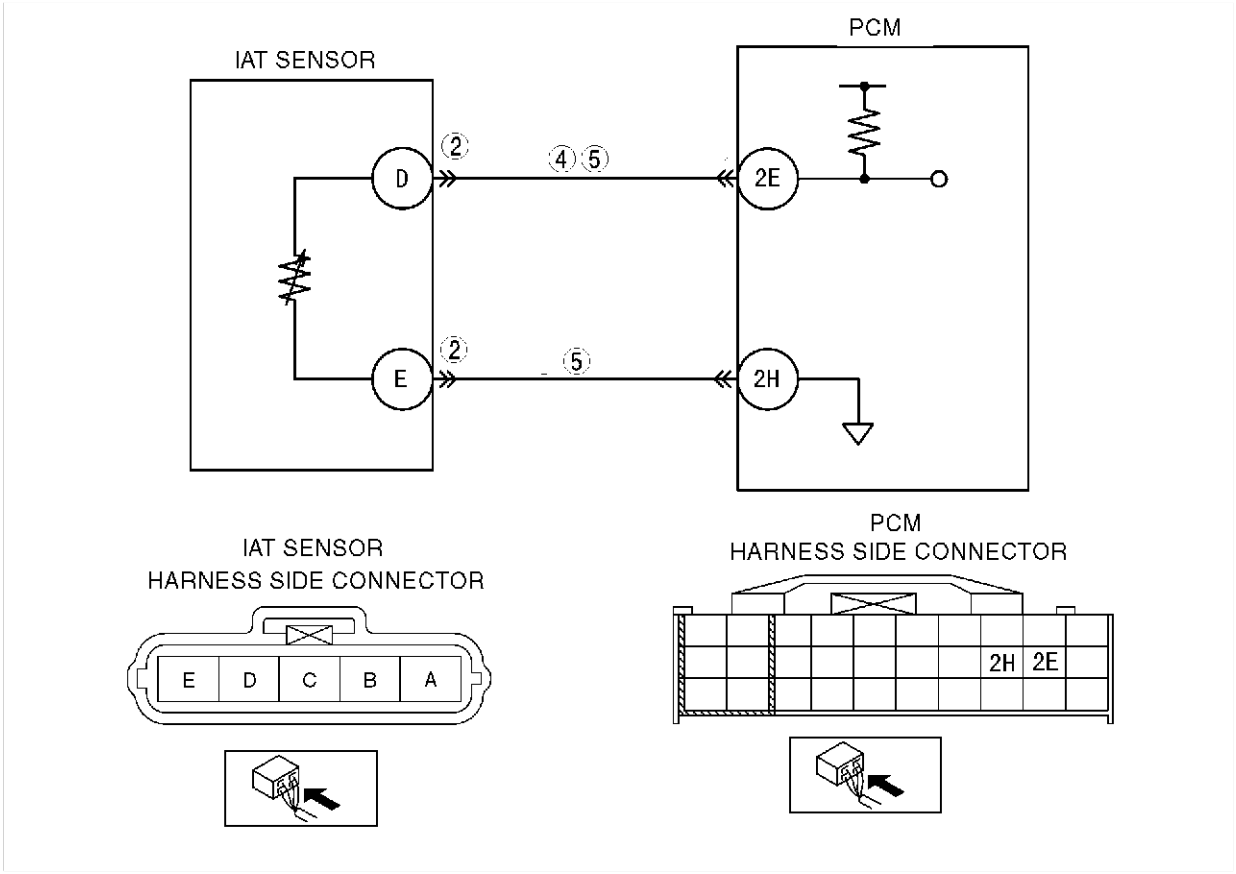

Diagnostic procedure

STEP	INSPECTION		ACTION
1	**PERFORM DTC CONFIRMATION PROCEDURE** • Perform DTC CONFIRMATION PROCEDURE. (See F3–103 DTC CONFIRMATION PROCEDURE.) • Is same DTC present?	Yes	Go to next step.
		No	Intermittent concern exists. Go to INTERMITTENT CONCERN TROUBLESHOOTING procedure. (See F3–270 INTERMITTENT CONCERN TROUBLESHOOTING.)
2	**INSPECT IAT SENSOR TERMINAL** • Turn ignition key to OFF. • Disconnect MAF/IAT sensor connector. • Inspect for bent terminal of MAF/IAT sensor terminals D and E (part-side). • Is there any malfunction?	Yes	Repair or replace terminal, then go to Step 6.
		No	Go to next step.
3	**CLASSIFY IAT SENSOR MALFUNCTION OR HARNESS MALFUNCTION** • Connect WDS or equivalent to DLC-2. • Access IAT PID. • Verify IAT value when disconnecting MAF/IAT sensor connector. • Does IAT value change?	Yes	Replace MAF/IAT sensor, then go to Step 6.
		No	Go to next step.
4	**INSPECT IAT SIGNAL CIRCUIT FOR SHORT TO GROUND** • Turn ignition key to OFF. • Inspect continuity between MAF/IAT sensor terminal D (harness-side) and body ground. • Is there continuity?	Yes	Repair or replace harness for short to ground, then go to Step 6.
		No	Go to next step.
5	**INSPECT IAT CIRCUITS FOR SHORT** • Inspect continuity between MAF/IAT sensor terminals D and E (harness-side). • Is there continuity?	Yes	Repair or replace harness for short, then go to Step 6.
		No	Go to next step.
6	**VERIFY TROUBLESHOOTING OF DTC P0112 COMPLETED** • Make sure to reconnect all disconnected connectors. • Clear DTC from PCM memory using WDS or equivalent. • Perform KOEO/KOER self-test. (See F3–103 KOEO/KOER SELF-TEST PROCEDURE.) • Is same DTC present?	Yes	Replace PCM, then go to next step. (See F3–81 PCM REMOVAL/INSTALLATION.)
		No	Go to next step.
7	**VERIFY AFTER REPAIR PROCEDURE** • Perform “After Repair Procedure”. (See F3–104 AFTER REPAIR PROCEDURE.) • Is there any DTC present?	Yes	Go to applicable DTC troubleshooting. (See F3–104 DTC TABLE.)
		No	Troubleshooting completed.

End Of Sta

DTC P0113

AME417001084W12

DTC P0113	IAT circuit high input
DETECTION CONDITION	• PCM monitors input voltage from IAT sensor If input voltage at PCM terminal 2E is **above 4.9 V**, PCM determines that IAT sensor circuit has malfunction. **Diagnostic support note** • This is a continuous monitor (CCM). • MIL illuminates if PCM detects the above malfunction condition during first drive cycle. • PENDING CODE is available if PCM detects the above malfunction condition. • FREEZE FRAME DATA is available. • DTC is stored in the PCM memory.
POSSIBLE CAUSE	• IAT sensor malfunction • Open circuit between MAF/IAT sensor terminal D and PCM terminal 2E • Short to power circuit between MAF/IAT sensor terminal D and PCM terminal 2E • Open circuit between MAF/IAT sensor terminal E and PCM terminal 2H • Poor connection at MAF/IAT sensor or PCM connector • PCM malfunction

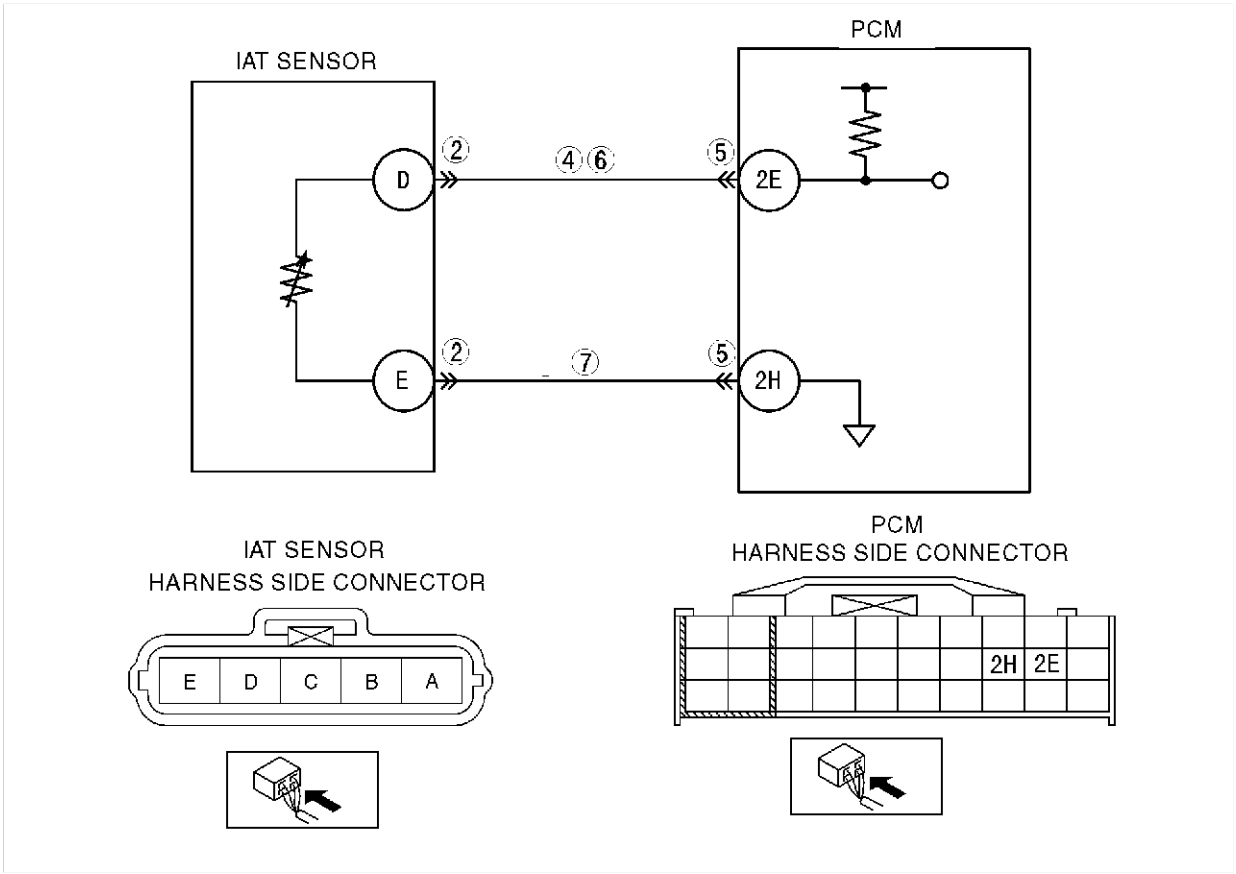

Diagnostic procedure

STEP	INSPECTION		ACTION
1	**PERFORM DTC CONFIRMATION PROCEDURE** • Perform DTC CONFIRMATION PROCEDURE. (See F3–103 DTC CONFIRMATION PROCEDURE.) • Is same DTC present?	Yes	Go to next step.
		No	Intermittent concern exists. Go to INTERMITTENT CONCERN TROUBLESHOOTING procedure. (See F3–270 INTERMITTENT CONCERN TROUBLESHOOTING.)

STEP	INSPECTION		ACTION
2	**INSPECT POOR CONNECTION OF IAT SENSOR CONNECTOR** • Turn ignition key to OFF. • Disconnect MAF/IAT sensor connector. • Inspect for poor connection (damaged, pulled-out pins, corrosion, etc.). • Is there any malfunction?	Yes	Repair or replace terminal, then go to Step 8.
		No	Go to next step.
3	**CLASSIFY IAT SENSOR MALFUNCTION OR HARNESS MALFUNCTION** • Connect WDS or equivalent to DLC-2. • Access IAT PID. • Connect a jumper wire between MAF/IAT sensor terminals D and E. • Verify IAT value • Is voltage **below 4.9 V**?	Yes	Replace MAF/IAT sensor, then go to Step 8.
		No	Go to next step.
4	**INSPECT IAT SENSOR SIGNAL CIRCUIT FOR SHORT TO POWER** • Turn ignition key to ON (Engine OFF). • Measure voltage between MAF/IAT sensor terminal D (harness-side) and body ground. • Is voltage **B+**?	Yes	Repair or replace harness for short to power, then go to Step 8.
		No	Go to next step.
5	**INSPECT POOR CONNECTION OF PCM CONNECTOR** • Turn ignition key to OFF. • Disconnect PCM connector. • Inspect PCM terminals 2E and 2H (harness-side) for tightness using feeler tool. • Is there any malfunction?	Yes	Repair or replace terminal, then go to Step 9.
		No	Go to next step.
6	**INSPECT IAT SENSOR SIGNAL CIRCUIT FOR OPEN CIRCUIT** • Inspect continuity between MAF/IAT sensor terminal D (harness-side) and PCM terminal 2E. • Is there continuity?	Yes	Go to next step.
		No	Repair or replace harness for open, then go to Step 9.
7	**INSPECT IAT SENSOR GROUND CIRCUIT FOR OPEN CIRCUIT** • Inspect continuity between MAF/IAT sensor terminal E (harness-side) and PCM terminal 2H. • Is there continuity?	Yes	Go to next step.
		No	Repair or replace harness for open, then go to next step.
8	**VERIFY TROUBLESHOOTING OF DTC P0113 COMPLETED** • Make sure to reconnect all disconnected connectors. • Clear DTC from PCM memory using WDS or equivalent. • Perform KOEO/KOER self-test. (See F3–103 KOEO/KOER SELF-TEST PROCEDURE.) • Is same DTC present?	Yes	Replace PCM, then go to next step. (See F3–81 PCM REMOVAL/INSTALLATION.)
		No	Go to next step.
9	**VERIFY AFTER REPAIR PROCEDURE** • Perform “After Repair Procedure”. (See F3–104 AFTER REPAIR PROCEDURE.) • Is there any DTC present?	Yes	Go to applicable DTC troubleshooting. (See F3–104 DTC TABLE.)
		No	Troubleshooting completed.

End Of Ste

F3

DTC P0117

AME417001084W13

DTC P0117	ECT circuit low input
DETECTION CONDITION	• PCM monitors ECT sensor signal at PCM terminal 1M. If PCM detects ECT sensor voltage **below 0.2 V,** PCM determines that ECT sensor circuit has malfunction. **Diagnostic support note** • This is a continuous monitor (CCM). • MIL illuminates if PCM detects the above malfunction condition during first draive cycle. • PENDING CODE is available if PCM detects the above malfunction condition. • FREEZE FRAME DATA is available. • DTC is stored in the PCM memory.
POSSIBLE CAUSE	• ECT sensor malfunction • Connect or terminal malfunction • Short to ground circuit between ECT sensor terminal A and PCM connector terminal 1M. • ECT signal circuit and ECT ground circuits short each other. • PCM malfunction

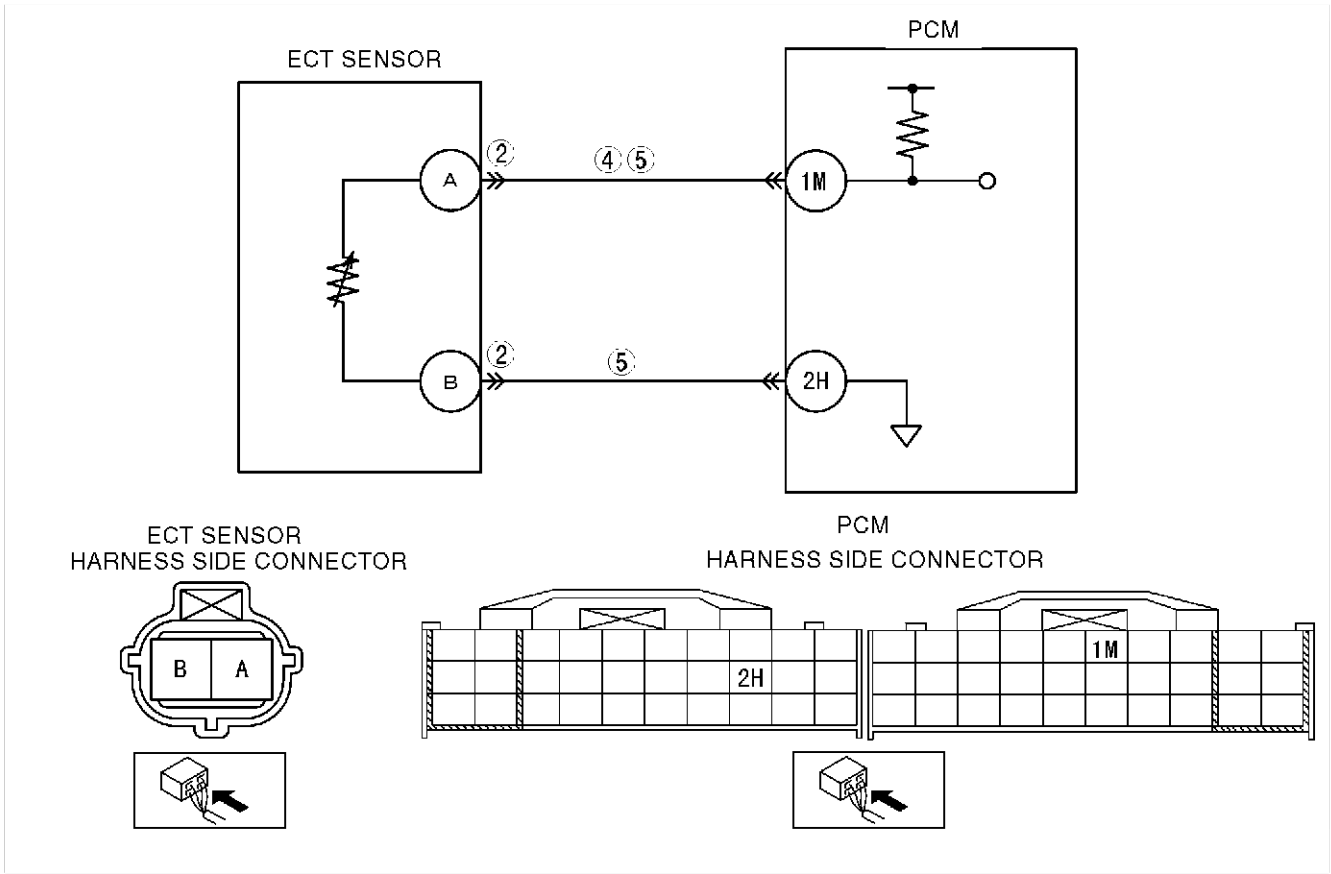

Diagnostic procedure

STEP	INSPECTION		ACTION
1	**PERFORM DTC CONFIRMATION PROCEDURE** • Perform DTC CONFIRMATION PROCEDURE. (See F3–103 DTC CONFIRMATION PROCEDURE.) • Is same DTC present?	Yes	Go to next step.
		No	Intermittent concern exists. Go to INTERMITTENT CONCERN TROUBLESHOOTING procedure. (See F3–270 INTERMITTENT CONCERN TROUBLESHOOTING.)
2	**INSPECT TERMINAL BENT** • Turn ignition key to OFF. • Disconnect ECT sensor connector. • Inspect for bent of ECT sensor terminals A and B (part-side). • Is there any malfunction?	Yes	Repair or replace terminal, then go to Step 6.
		No	Go to next step.
3	**CLASSIFY ECT SENSOR MALFUNCTION OR HARNESS MALFUNCTION** • Connect WDS or equivalent to DLC-2. • Access ECT PID. • Verify ECT value when disconnecting ECT sensor connector. • Does ECT value change?	Yes	Replace ECT sensor, then go to Step 6.
		No	Go to next step.
4	**INSPECT ECT SIGNAL CIRCUIT FOR SHORT TO GROUND** • Turn ignition key to OFF. • Inspect continuity between ECT sensor terminal A (harness-side) and body ground. • Is there continuity?	Yes	Repair or replace harness for short to ground, then go to Step 6.
		No	Go to next step.
5	**INSPECT IAT CIRCUIT FOR SHORT WITH EACH OTHER** • Inspect continuity between ECT sensor terminal A and B (harness-side). • Is there continuity?	Yes	Repair or replace harness for short, then go to next step.
		No	Go to next step.
6	**VERIFY TROUBLESHOOTING OF DTC P0117 COMPLETED** • Make sure to reconnect all disconnected connectors. • Clear DTC from PCM memory using WDS or equivalent. • Perform KOEO/KOER self-test. (See F3–103 KOEO/KOER SELF-TEST PROCEDURE.) • Is same DTC present?	Yes	Replace PCM, then go to next step. (See F3–81 PCM REMOVAL/INSTALLATION.)
		No	Go to next step.
7	**VERIFY AFTER REPAIR PROCEDURE** • Perform “After Repair Procedure”. (See F3–104 AFTER REPAIR PROCEDURE.) • Is there any DTC present?	Yes	Go to applicable DTC troubleshooting. (See F3–104 DTC TABLE.)
		No	Troubleshooting completed.

End Of Ste

DTC P0118

AME417001084W14

DTC P0118	ECT circuit high input
DETECTION CONDITION	• PCM monitors ECT sensor signal at PCM terminal 1M. If PCM detects ECT sensor voltage **above 4.5 V**, PCM determines that ECT sensor circuit has malfunction. **Diagnostic support note** • This is a continuous monitor (CCM). • MIL illuminates if PCM detects the above malfunction condition during first drive cycle. • PENDING CODE is available if PCM detects the above malfunction condition. • FREEZE FRAME DATA is available. • DTC is stored in the PCM memory.
POSSIBLE CAUSE	• ECT sensor malfunction • Open circuit between ECT sensor terminal A and PCM terminal 1M • Short to power circuit between ECT sensor terminal A and PCM terminal 1M • Open circuit between ECT sensor terminal B and PCM terminal 2H • Poor connection of ECT sensor or PCM connectors • PCM malfunction

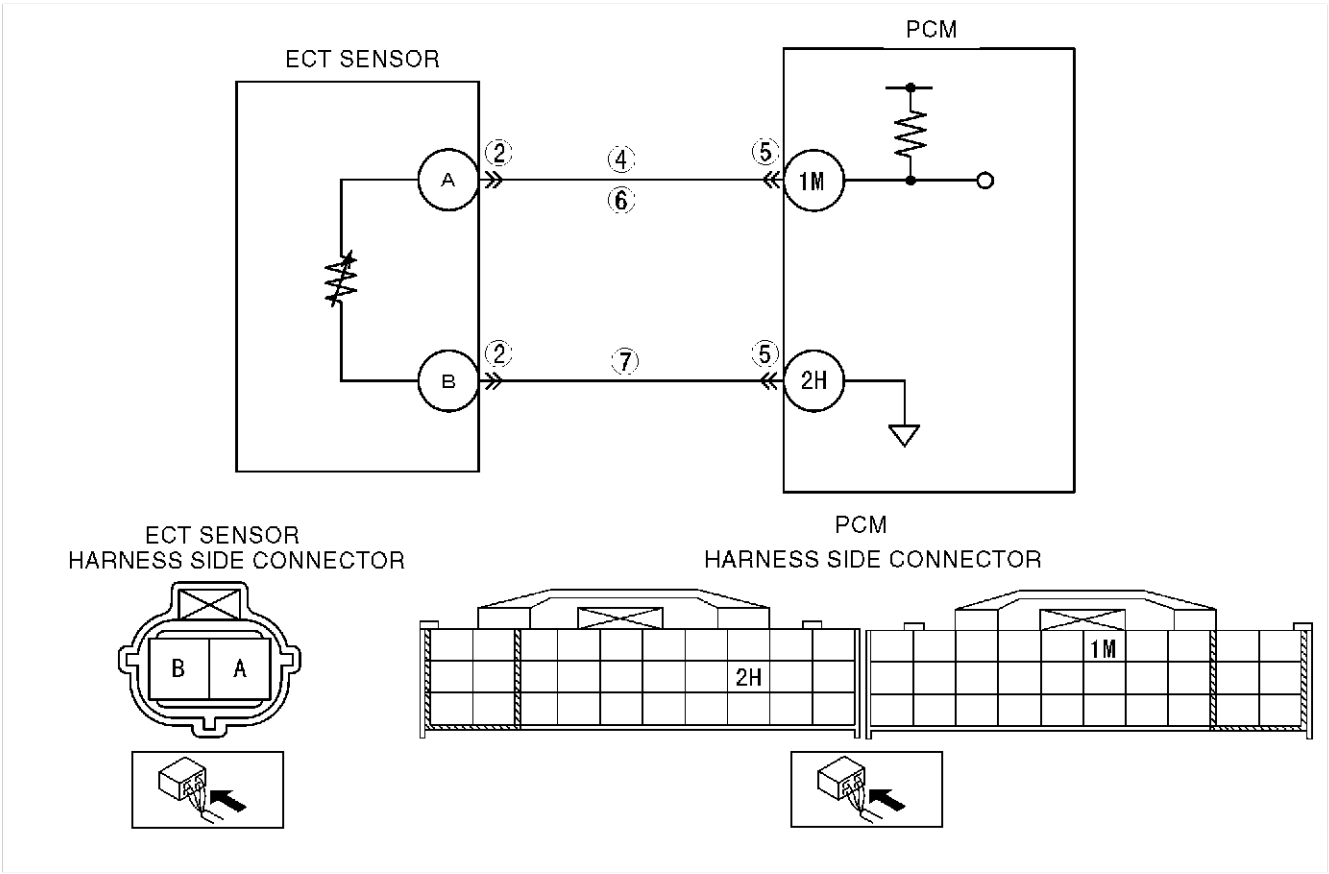

Diagnostic procedure

STEP	INSPECTION		ACTION
1	**PERFORM DTC CONFIRMATION PROCEDURE** • Perform DTC CONFIRMATION PROCEDURE. (See F3–103 DTC CONFIRMATION PROCEDURE.) • Is same DTC present?	Yes	Go to next step.
		No	Intermittent concern exists. Go to INTERMITTENT CONCERN TROUBLESHOOTING procedure. (See F3–270 INTERMITTENT CONCERN TROUBLESHOOTING.)

STEP	INSPECTION		ACTION
2	**INSPECT POOR CONNECTION OF ECT SENSOR CONNECTOR** • Turn ignition key to OFF. • Disconnect ECT sensor connector. • Inspect for poor connection (damaged, pulled-out pins, corrosion, etc.). • Is there any malfunction?	Yes	Repair or replace terminal, then go to Step 8.
		No	Go to next step.
3	**CLASSIFY ECT SENSOR MALFUNCTION OR HARNESS MALFUNCTION** • Connect WDS or equivalent to DLC-2. • Access ECT PID. • Connect a jumper wire between ECT sensor terminals A and B. • Verify ECT value • Is voltage **below 4.5 V**?	Yes	Replace ECT sensor, then go to Step 8.
		No	Go to next step.
4	**INSPECT ECT SENSOR SIGNAL CIRCUIT FOR SHORT TO POWER** • Turn ignition key to ON (Engine OFF). • Measure voltage between ECT sensor terminal A (harness-side) and body ground. • Is the voltage **B+**?	Yes	Repair or replace harness for short to power, then go to Step 8.
		No	Go to next step.
5	**INSPECT POOR CONNECTION OF PCM CONNECTOR** • Disconnect PCM connector. • Check for poor connection (damaged, pulled-out pins, corrosion, etc.). • Is there any malfunction?	Yes	Repair or replace terminal, then go to Step 8.
		No	Go to next step.
6	**INSPECT ECT SENSOR SIGNAL CIRCUIT FOR OPEN CIRCUIT** • Inspect continuity between ECT sensor terminal A (harness-side) and PCM terminal 1M. • Is there continuity?	Yes	Go to next step.
		No	Repair or replace harness for open, then go to Step 8.
7	**INSPECT ECT SENSOR GROUND CIRCUIT FOR OPEN CIRCUIT** • Inspect continuity between ECT sensor terminal B (harness-side) and PCM terminal 2H. • Is there continuity?	Yes	Go to next step.
		No	Repair or replace harness for open, then go to next step.
8	**VERIFY TROUBLESHOOTING OF DTC P0118 COMPLETED** • Make sure to reconnect all disconnected connectors. • Clear DTC from PCM memory using WDS or equivalent. • Perform KOEO/KOER self-test. (See F3–103 KOEO/KOER SELF-TEST PROCEDURE.) • Is same DTC present?	Yes	Replace PCM, then go to next step. (See F3–81 PCM REMOVAL/INSTALLATION.)
		No	Go to next step.
9	**VERIFY AFTER REPAIR PROCEDURE** • Perform “After Repair Procedure”. (See F3–104 AFTER REPAIR PROCEDURE.) • Is there any DTC present?	Yes	Go to applicable DTC troubleshooting. (See F3–104 DTC TABLE.)
		No	Troubleshooting completed.

End Of Ste

DTC P0121

AME417001084W15

DTC P0121	Throttle position stuck close (lower than expected)/open (higher than expected)
DETECTION CONDITION	• If PCM detects that throttle valve opening angle is **below 12.5%** for **5 s** after following conditions are met, PCM determines that TP is stuck closed: **MONITORING CONDITION** — Engine coolant temperature **above 80 °C {158 °F}** — MAF sensor signal **above 58.3 g/s {7.7 lb/minutes}** • If PCM detects that throttle valve opening angle is **above 50%** for **5 seconds** after following conditions are met, the PCM determines that TP is stuck open: **MONITORING CONDITION** — Engine speed **above 500 rpm** — MAF sensor signal **below 4.8 g/s {0.63 lb/min.}** **Diagnostic support note** • This is a continuous monitor (CCM). • MIL illuminates if PCM detects the above malfunction condition in two consecutive drive cycles or in one drive cycle while the DTC for the same malfunction has been stored in the PCM. • PENDING CODE is available if PCM detects the above malfunction condition. • FREEZE FRAME DATA is available. • DTC is stored in the PCM memory.
POSSIBLE CAUSE	• TP sensor malfunction • Electrical corrosion in TP signal circuit • Voltage drop in constant voltage supply circuit • Voltage drop in ground circuit • MAF sensor malfunction • PCM malfunction

Diagnostic procedure

STEP	INSPECTION		ACTION
1	**VERIFY FREEZE FRAME DATA HAS BEEN RECORDED** • Has FREEZE FRAME DATA been recorded?	Yes	Go to next step.
		No	Record FREEZE FRAME DATA on repair order, then go to next step.
2	**VERIFY RELATED PENDING CODE OR STORED DTC** • Turn ignition key to ON (Engine OFF). • Retrieve pending or stored DTC using WDS or equivalent. • Is DTC P0101 also retrieved?	Yes	Go to DTC P0101 troubleshooting procedure.
		No	Go to next step.
3	**VERIFY RELATED SERVICE INFORMATION AVAILABILITY** • Check for related Service Information availability. • Is any related Service Information available?	Yes	Perform repair or diagnosis according to available Service Information. • If vehicle is not repaired, go to next step.
		No	Go to next step.

STEP	INSPECTION		ACTION
4	**VERIFY CURRENT INPUT SIGNAL STATUS - IS CONCERN INTERMITTENT OR CONSTANT** • Start the engine. • Access ECT, TP and MAF PIDs using WDS or equivalent. • Warm up the engine until ECT PID is **above 80 °C {176 °F}** • Drive the vehicle. • Read TP PID while MAF PID is **above 58.3 g/s {7.7 lb/min.}**. • Is TP PID reading **above 12.5%**?	Yes	Go to Step 7.
		No	Go to next step.
5	**VERIFY TP PID** • Start engine. • Access TP, MAF and RPM PIDs using WDS or equivalent. • Read TP PID while MAF PID is **below 4.8 g/s {0.6 lb/min.}** and RPM PID is **above 500 rpm**. • Is TP PID reading **above 50%**?	Yes	Go to Step 12.
		No	Go to next step.
6	**VERIFY CURRENT INPUT SIGNAL STATUS - IS CONCERN INTERMITTENT OR CONSTANT** • Drive the vehicle and read MAF PID. • Does MAF PID change in accordance with driving condition?	Yes	Intermittent concern exists. Go to INTERMITTENT CONCERNS troubleshooting procedure.
		No	Inspect Mass airflow sensor and related circuits and terminals. (See F3–88 MASS AIR FLOW (MAF) SENSOR INSPECTION.) Repair or replace as necessary, then go to Step 16.
7	**INSPECT TP SENSOR TERMINALS FOR ELECTRICAL CORROSION** • Turn ignition key to OFF. • Disconnect TP sensor connector • Inspect for electrical corrosion on male and female TP sensor terminals. • Is any electrical corrosion found?	Yes	Repair or replace suspected terminal or TP sensor, then go to Step 11.
		No	Go to next step.
8	**VERIFY TP SENSOR** • Does TP sensor resistance smoothly change while gradually opening throttle valve?	Yes	Go to next step.
		No	Replace TP sensor, then go to Step 11.
9	**INSPECT PCM TERMINALS FOR ELECTRICAL CORROSION** • Disconnect PCM connector. • Inspect for electrical corrosion on PCM male and female terminals. • Is any electrical corrosion found?	Yes	Repair terminal, then go to Step 11.
		No	Go to next step.

STEP	INSPECTION		ACTION
10	**INSPECT CONSTANT VOLTAGE SUPPLY AND TP SIGNAL CIRCUITS FOR VOLTAGE DROP** • Turn ignition key to ON (Engine OFF). • Inspect voltage between following terminals: — TP sensor connector terminal C (harness-side) and PCM terminal 2K — TP sensor connector terminal B (harness-side) and PCM terminal 2A • Is voltage **approx. 0 V**?	Yes	Go to next step.
		No	Inspect for rust or corrosion on PCM terminals 2A and 2K (harness-side). • Repair or replace suspected terminal then go to next step.
11	**VERIFY TROUBLESHOOTING OF DTC P0121 COMPLETED** • Make sure to reconnect all disconnected connectors. • Start the engine. • Clear DTC from PCM memory using WDS or equivalent. • Access ECT, TP and MAF PIDs using WDS or equivalent. • Warm up the engine until ECT PID reading is **above 80 °C {176°F}**. • Drive the vehicle and read TP and MAF PIDs. • Verify PIDs reading are within specifications MAF PID: **above 58.3 g/s {7.7 lb/min.}** TP PID: **above 12.5% above 5 s** • Is PENDING CODE of same DTC present?	Yes	Replace PCM, then go to Step 17.
		No	Go to Step 17.
12	**INSPECT TP SENSOR TERMINALS FOR ELECTRICAL CORROSION** • Turn ignition key to OFF. • Disconnect TP sensor connector. • Inspect for electrical corrosion on male and female TP sensor terminals. • Is any electrical corrosion found?	Yes	Repair or replace suspected terminal or TP sensor, then go to Step 16.
		No	Go to next step.
13	**INSPECT GROUND CIRCUIT FOR VOLTAGE DROP** • Inspect resistance between TP sensor terminal A (harness-side) and body ground. • Is resistance **approx. 0 ohm**?	Yes	Go to next step.
		No	Repair or replace for rust or corrosion on PCM terminal 2H (harness-side). • Repair or replace suspected terminal. Go to Step 16.

STEP	INSPECTION		ACTION
14	**VERIFY TP SENSOR** • Does resistance smoothly change while gradually opening throttle valve?	Yes	Go to next step.
		No	Replace TP sensor, then go to Step 16.
15	**INSPECT PCM TERMINALS FOR ELECTRICAL CORROSION** • Disconnect PCM connector. • Inspect for electrical corrosion on PCM and PCM connector male and female terminals. • Is any electrical corrosion found?	Yes	Repair terminal, then go to next step.
		No	Go to next step.
16	**VERIFY TROUBLESHOOTING OF DTC P0121 COMPLETED** • Make sure to reconnect all disconnected connectors. • Start engine. • Clear DTC from PCM memory using WDS or equivalent. • Access RPM, TP and MAF PIDs using WDS or equivalent. • Verify TP PID is reading **below 50%** while MAF PID is **below 4.8 g/s {0.6 lb/min.}** and RPM PID is **above 500 rpm**. • Is PENDING CODE of same DTC present?	Yes	Replace PCM, then go to next step. (See F3–81 PCM REMOVAL/INSTALLATION.)
		No	Go to next step.
17	**VERIFY AFTER REPAIR PROCEDURE** • Perform “After Repair Procedure”. (See F3–104 AFTER REPAIR PROCEDURE.) • Is there any DTC present?	Yes	Go to applicable DTC troubleshooting. (See F3–104 DTC TABLE.)
		No	Troubleshooting completed.

End Of Ste

DTC P0122

AME417001084W16

DTC P0122	TP circuit low input
DETECTION CONDITION	• If PCM detects TP sensor voltage at PCM terminal 2A is **below 0.1 V** while engine is running,PCM determines that TP circuit has malfunction. **Diagnostic support note** • This is a continuous monitor (CCM). • MIL illuminates if PCM detects the above malfunction conditions in first drive cycles. • PENDING CODE is available if PCM detects the above malfunction condition. • FREEZE FRAME DATA is available. • DTC is stored in the PCM memory.
POSSIBLE CAUSE	• TP sensor malfunction • Connector or terminal malfunction • Open circuit between TP sensor terminal B and PCM terminal 2A • Short to ground circuit between TP sensor terminal B and PCM terminal 2A • Open circuit between TP sensor terminal C and PCM terminal 2K

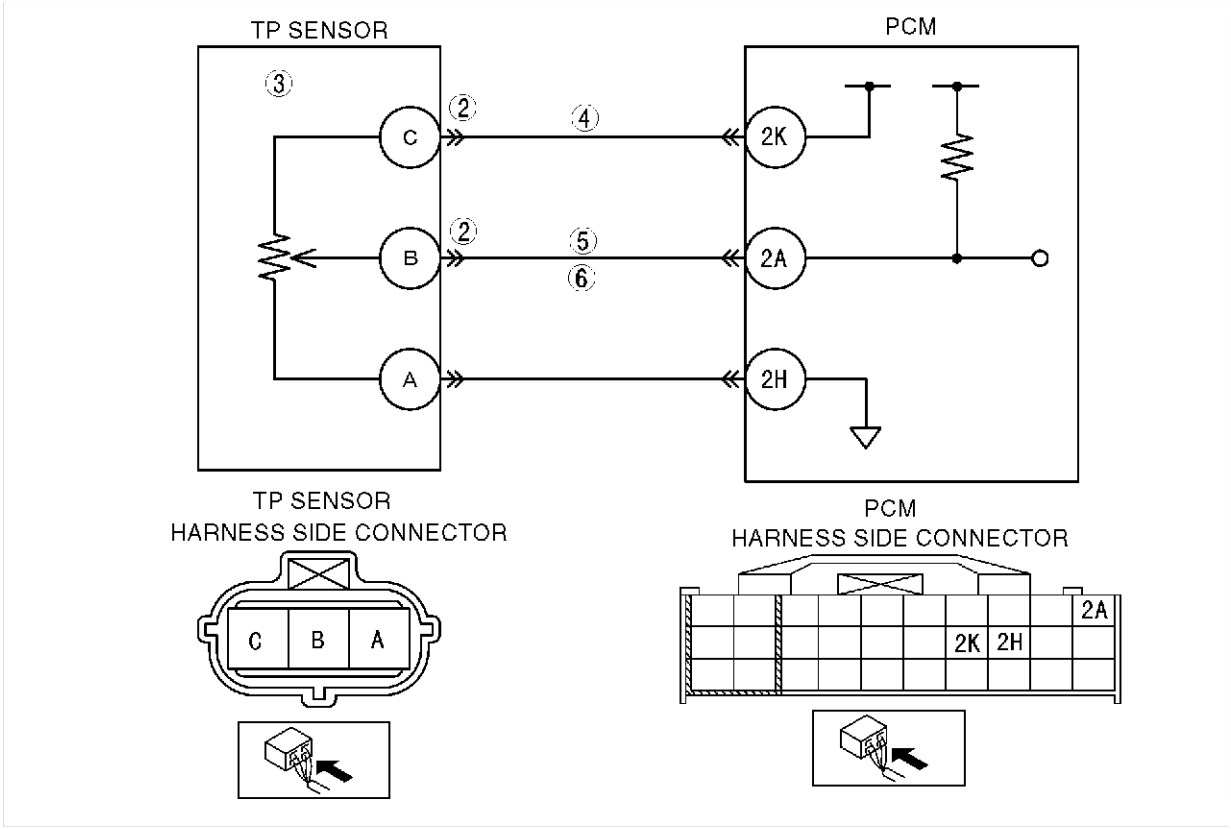

Diagnostic procedure

STEP	INSPECTION		ACTION
1	**PERFORM DTC CONFIRMATION PROCEDURE** • Perform DTC CONFIRMATION PROCEDURE. (See F3–103 DTC CONFIRMATION PROCEDURE.) • Is same DTC present?	Yes	Go to next step.
		No	Intermittent concern exists. Go to INTERMITTENT CONCERN TROUBLESHOOTING procedure. (See F3–270 INTERMITTENT CONCERN TROUBLESHOOTING.)

STEP	INSPECTION		ACTION
2	**CLASSIFY TP SENSOR OR HARNESS MALFUNCTION** • Connect WDS or equivalent. • Access TP PID. • Disconnect TP sensor connector. • Connect a jumper wire between TP sensor terminals B and C (harness-side). • Is voltage **above 4.9 V**?	Yes	Go to next step.
		No	Go to step 4.
3	**INSPECT TP SENSOR CIRCUIT FOR OPEN** • Inspect TP sensor. (See F3–88 THROTTLE POSITION (TP) SENSOR INSPECTION.) • Is TP sensor okay?	Yes	Inspect for poor TP sensor connector terminal C connection. Repair or replace as necessary, then go to Step 7.
		No	Replace TP sensor, then go to Step 7.
4	**INSPECT POWER SUPPLY CIRCUIT VOLTAGE AT TP SENSOR CONNECTOR** **Note** • If DTC P0107 and P2228 are also retrieved with P0122, go to CONSTANT VOLTAGE troubleshooting procedure. • Turn ignition key to ON (Engine OFF). • Inspect voltage at TP sensor terminal 2k (harness-side). • Is voltage **within 4.5—5.5 V**?	Yes	Go to next step.
		No	Repair or replace open circuit between TP sensor connector terminal C and PCM connector terminal 2K (harness-side). Then, then go to Step 7.
5	**VERIFY TP SIGNAL CIRCUIT FOR OPEN CIRCUIT** • Turn ignition key to OFF. • Inspect continuity between TP sensor terminal B (harness-side) and PCM terminal 2A. • Is there continuity?	Yes	Go to next step.
		No	Repair or replace suspected harness, then go to Step 7.
6	**VERIFY TP SIGNAL CIRCUIT FOR SHORT TO GROUND** • Inspect continuity between TP sensor terminal B (harness-side) and body ground. • Is there continuity?	Yes	Repair or replace suspected harness, then go to Step 7.
		No	Go to next step.
7	**VERIFY TROUBLESHOOTING OF DTC P0122 COMPLETED** • Make sure to reconnect all disconnected connectors. • Clear DTC from PCM memory using WDS or equivalent. • Perform KOEO/KOER self-test. (See F3–103 KOEO/KOER SELF-TEST PROCEDURE.) • Is same DTC present?	Yes	Replace PCM, then go to next step. (See F3–81 PCM REMOVAL/INSTALLATION.)
		No	Go to next step.
8	**VERIFY AFTER REPAIR PROCEDURE** • Perform “After Repair Procedure”. (See F3–104 AFTER REPAIR PROCEDURE.) • Is there any DTC present?	Yes	Go to applicable DTC troubleshooting. (See F3–104 DTC TABLE.)
		No	Troubleshooting completed.

End Of Ste

F3

DTC P0123

AME417001084W17

DTC P0123	TP circuit high input
DETECTION CONDITION	• If PCM detects TP sensor voltage at PCM terminal 2A is **above 4.9 V** after ignition key turned to ON, the PCM determines that TP circuit has malfunction. **Diagnostic support note** • This is a continuous monitor (CCM). • MIL illuminates if PCM detects the above malfunction condition in first drive cycles. • PENDING CODE is available if PCM detects the above malfunction condition. • FREEZE FRAME DATA is available. • DTC is stored in the PCM memory.
POSSIBLE CAUSE	• TP sensor malfunction • Connector or terminal malfunction • Open circuit between TP sensor terminal A and PCM terminal 2H • Short to constant voltage supply circuit between TP sensor terminal B and PCM terminal 2A

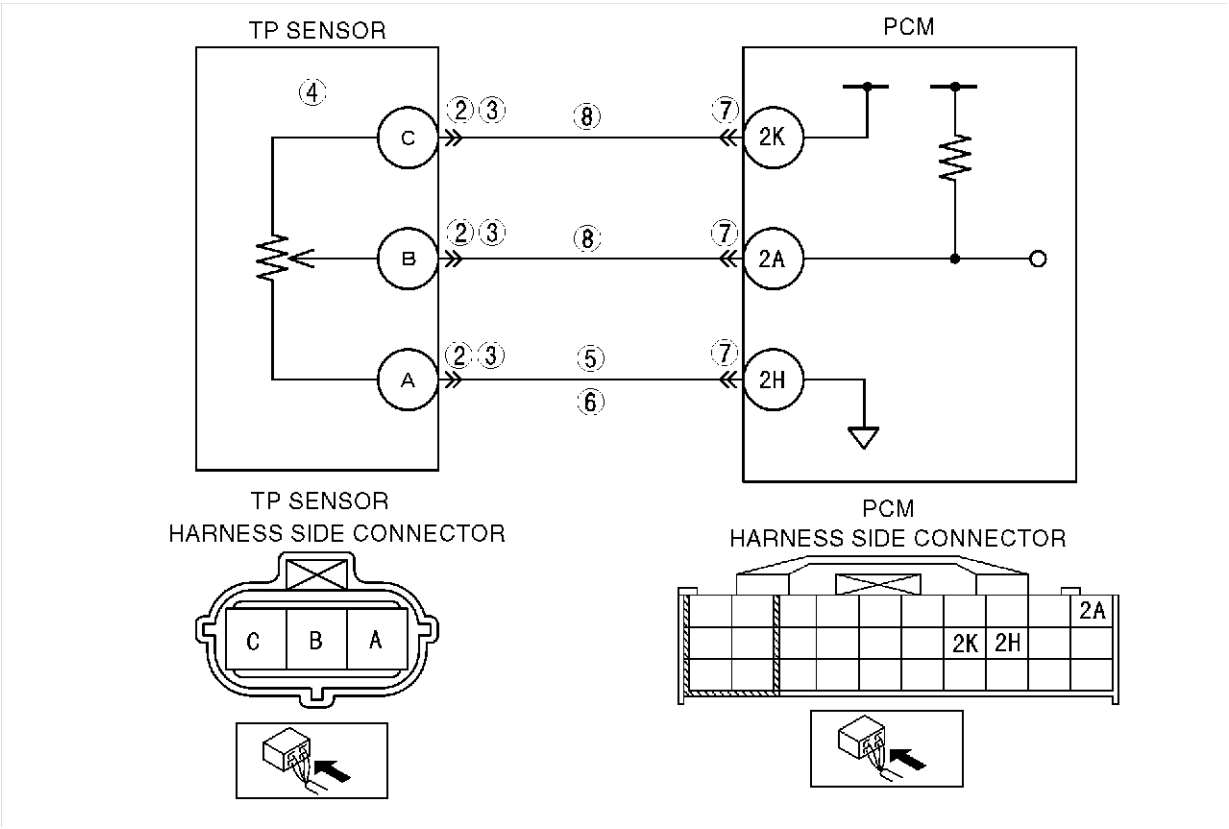

Diagnostic procedure

STEP	INSPECTION		ACTION
1	**PERFORM DTC CONFIRMATION PROCEDURE** • Perform DTC CONFIRMATION PROCEDURE. (See F3–103 DTC CONFIRMATION PROCEDURE.) • Is same DTC present?	Yes	Go to next step.
		No	Intermittent concern exists. Go to INTERMITTENT CONCERN TROUBLESHOOTING procedure. (See F3–270 INTERMITTENT CONCERN TROUBLESHOOTING.)

STEP	INSPECTION		ACTION
2	**INSPECT TP SENSOR CONNECTOR** • Turn ignition key to OFF. • Verify that the TP sensor connector is connected securely. • Is connector okay?	Yes	Go to next step.
		No	Connect the connector securely, then go to Step 9.
3	**INSPECT POOR CONNECTION OF TP SENSOR CONNECTOR** • Disconnect TP sensor connector. • Inspect for poor connection (damaged, pulled-out terminals, corrosion, etc.). • Is there any malfunction?	Yes	Repair or replace suspected terminal, then go to Step 9.
		No	Go to next step.
4	**INSPECT TP SENSOR** • Perform TP sensor inspection. (See F3–88 THROTTLE POSITION (TP) SENSOR INSPECTION) • Is TP sensor okay?	Yes	Go to next step.
		No	Replace TP sensor, then go to Step 9.
5	**INSPECT TP SENSOR SIGNAL CIRCUIT FOR SHORT TO POWER** • Turn ignition key to ON(Engine OFF). • Measure voltage between TP sensor terminal B(harness-side) and body ground. • Is voltage **above 4.9 V**?	Yes	Repair or replace harness for short to power, then go to step 9.
		No	Go to next step.
6	**VERIFY TP SENSOR GROUND CIRCUIT FOR OPEN CIRCUIT** • Inspect continuity between TP sensor connector terminal A and body ground. • Is there continuity?	Yes	Repair or replace open circuit between TP sensor connector terminal A (harness-side) and PCM connector terminal 2H (harness-side). Then, go to Step 9.
		No	Go to next step.
7	**INSPECT PCM CONNECTOR** • Disconnect PCM connector. • Inspect for poor connection (damaged, pulled-out terminals, corrosion, etc.). • Is there any malfunction?	Yes	Repair terminal, then go to Step 9.
		No	Go to Step 9.
8	**VERIFY TP SIGNAL CIRCUIT FOR SHORT TO CONSTANT VOLTAGE CIRCUIT** • Inspect continuity between TP sensor connector terminals B and C. • Is there continuity?	Yes	Repair or replace suspected harness, then go to next step.
		No	Go to next step.
9	**VERIFY TROUBLESHOOTING OF DTC P0123 COMPLETED** • Make sure to reconnect all disconnected connectors. • Clear DTC from PCM memory using WDS or equivalent. • Perform KOEO/KOER self-test. (See F3–103 KOEO/KOER SELF-TEST PROCEDURE.) • Is same DTC present?	Yes	Replace PCM, then go to next step. (See F3–81 PCM REMOVAL/INSTALLATION.)
		No	Go to next step.
10	**VERIFY AFTER REPAIR PROCEDURE** • Perform “After Repair Procedure”. (See F3–104 AFTER REPAIR PROCEDURE.) • Is there any DTC present?	Yes	Go to applicable DTC troubleshooting. (See F3–104 DTC TABLE.)
		No	Troubleshooting completed.

End Of Ste

DTC P0125

AME417001084W18

DTC P0125	Excessive time to enter closed loop fuel control
DETECTION CONDITION	• PCM monitors ECT sensor signal at PCM terminal 1M after engine is started when cold. If engine coolant temperature does not reach the expected temperature within specified period, PCM determines that it has taken an excessive amount of time for the engine coolant temperature to reach the temperature necessary to start closed-loop fuel control. **Diagnostic support note** • This is a continuous monitor (CCM). • MIL illuminates if PCM detects the above malfunction condition in two consecutive drive cycles or in one drive cycle while the DTC for the same malfunction has been stored in the PCM. • PENDING CODE is available if PCM detects the above malfunction condition during first drive cycle. • FREEZE FRAME DATA is available. • DTC is stored in PCM memory.
POSSIBLE CAUSE	• ECT sensor malfunction • Poor connection of connectors • PCM malfunction

Diagnostic procedure

STEP	INSPECTION		ACTION
1	**VERIFY FREEZE FRAME DATA HAS BEEN RECORDED** • Has FREEZE FRAME DATA been recorded?	Yes	Go to next step.
		No	Record FREEZE FRAME DATA on repair order, then go to next step.
2	**VERIFY RELATED SERVICE INFORMATION AVAILABILITY** • Check for related Service Information availability. • Is any related Service Information available?	Yes	Perform repair or diagnosis according to available Service Information. • If vehicle is not repaired, go to next step.
		No	Go to next step.
3	**VERIFY CURRENT INPUT SIGNAL STATUS-IS CONCERN INTERMITTENT OR CONSTANT** • Start engine. • Warm up engine completely. • Access ECT PID using WDS or equivalent. • Is ECT PID **above 60 °C {140 °F}**?	Yes	Intermittent concern exists. Go to INTERMITTENT CONCERNS TROUBLESHOOTING procedure. (See F3–270 INTERMITTENT CONCERN TROUBLESHOOTING.)
		No	Go to next step.
4	**INSPECT POOR CONNECTION OF ECT SENSOR CONNECTOR** • Turn ignition key to OFF. • Disconnect ECT sensor connector. • Check for poor connection (damaged, pulled-out pins, corrosion, etc.). • Is there any malfunction?	Yes	Repair or replace terminal, then go to Step 7.
		No	Go to next step.
5	**INSPECT ECT SENSOR** • Inspect ECT sensor. (See F3–90 ENGINE COOLANT TEMPERATURE (ECT) SENSOR INSPECTION.) • Is it okay?	Yes	Go to next step.
		No	Replace ECT sensor, then go to Step 7.
6	**INSPECT POOR CONNECTION OF PCM CONNECTOR** • Disconnect PCM connector. • Check for poor connection (damaged, pulled-out pins, corrosion, etc.). • Is there malfunctions?	Yes	Repair or replace terminal, then go to next step.
		No	Go to next step.
7	**VERIFY TROUBLESHOOTING OF DTC P0125 COMPLETED** • Make sure to reconnect all disconnected connectors. • Clear DTC from PCM memory using WDS or equivalent. • Turn ignition key to ON (Engine OFF). • Access ECT PID using WDS or equivalent. • Wait until ECT PID **below 20 °C {68 °F}**. • Start engine and warm it up completely. • Is PENDING CODE of same DTC present?	Yes	Replace PCM, then go to next step. (See F3–81 PCM REMOVAL/INSTALLATION.)
		No	Go to next step.
8	**VERIFY AFTER REPAIR PROCEDURE** • Perform “After Repair Procedure”. (See F3–104 AFTER REPAIR PROCEDURE.) • Is there any DTC present?	Yes	Go to applicable DTC troubleshooting. (See F3–104 DTC TABLE.)
		No	Troubleshooting completed.

End Of Sie

DTC P0131, P0132

AME417001084W19

DTC P0131 DTC P0132	**Front HO2S stuck low** **Front HO2S stuck high**
DETECTION CONDITION	• PCM monitors input voltage from front HO2S when the following monitoring conditions are met. If input voltage from sensor remains **below or above 0.45 V** for **56 s**, PCM determines that there is no front HO2S inversion. **MONITORING CONDITIONS** — Engine speed is **above 1,500 rpm**. — Engine coolant temperature is **above 80 °C {176°F}**. **Diagnostic support note** • This is a continuous monitor (CCM). • MIL illuminates if PCM detects the above malfunction condition in two consecutive drive cycles or in one drive cycle while the DTC for the same malfunction has been stored in the PCM. • PENDING CODE is available if PCM detects the above malfunction condition during first drive cycle. • FREEZE FRAME DATA is available. • DTC is stored in the PCM memory.
POSSIBLE CAUSE	• Front HO2S malfunction • Front HO2S heater malfunction • Fuel injector malfunction • Pressure regulator malfunction • Fuel pump malfunction • Fuel delivery hose clogging or leakage • Fuel filter clogging • Fuel return hose clogging or leakage • Air suction or leakage • PCV valve malfunction • Purge solenoid valve malfunction • Purge solenoid hoses are hooked up incorrectly. • Ignition coil malfunction • Insufficient compression • Engine malfunction

F3

Diagnostic procedure

STEP	INSPECTION		ACTION
1	**VERIFY FREEZE FRAME DATA HAS BEEN RECORDED** • Has FREEZE FRAME DATA been recorded?	Yes	Go to next step.
		No	Record FREEZE FRAME DATA on repair order, then go to next step.
2	**VERIFY RELATED SERVICE INFORMATION AVAILABILITY** • Check for related Service Information availability. • Is any related Service Information available?	Yes	Perform repair or diagnosis according to available Service Information. • If vehicle is not repaired, go to next step.
		No	Go to next step.
3	**VERIFY RELATED PENDING AND STORED DTCs** • Turn ignition key to OFF, then ON (Engine OFF). • Verify pending and stored DTCs using WDS or equivalent. • Is any other DTC present?	Yes	Go to appropriate DTC troubleshooting procedures.
		No	Go to next step.
4	**IDENTIFY TRIGGER DTC FOR FREEZE FRAME DATA** • Is DTC P0131 and P0132 on FREEZE FRAME DATA?	Yes	Go to next step.
		No	Go to troubleshooting procedures for DTC on FREEZE FRAME DATA.
5	**VERIFY CURRENT INPUT SIGNAL STATUS - IS CONCERN INTERMITTENT OR CONSTANT** • Warm-up engine. • Access O2S11 for P0131 and P0132 PID using WDS or equivalent. • Verify PID while racing engine (in NEUTRAL). • Is PID reading okay? — **More than 0.45 V** when accelerator pedal is suddenly depressed (rich condition) — **Less than 0.45 V** just after release of accelerator pedal (lean condition)	Yes	Go to next step.
		No	Replace front HO2S, then go to Step 19.

STEP	INSPECTION		ACTION
6	**INSPECT LONG TERM FUEL TRIM** • Access LONGFT1 for P0131 and P0132 PID using WDS or equivalent. • Compare it with FREEZE FRAME DATA recorded at Step1. • Did it decrease?	Yes	Engine is operating under rich condition. Go to next step.
		No	Engine is operating under lean condition. Go to step 9.
7	**INSPECT FUEL LINE PRESSURE (EXCESSIVE FUEL LINE PRESSURE)** • Turn ignition key to OFF. • Inspect fuel line pressure. (See F3–58 FUEL LINE PRESSURE INSPECTION.) • Is fuel line pressure okay?	Yes	Go to next step.
		No	Inspect following parts and repair or replace if necessary: • Fuel pump maximum pressure • Fuel return pipe for clog — If all items above are okay, replace pressure regulator. Then, go to Step 19.
8	**INSPECT PURGE SOLENOID VALVE FOR STUCK OPEN** • Turn ignition key to OFF. • Disconnect both hoses from purge solenoid valve. • Blow air through purge solenoid valve. • Does air blow through?	Yes	Replace purge solenoid valve.
		No	Go to Step 13.
9	**INSPECT PCV VALVE OPERATION** • Inspect PCV valve operation. (See F3–79 PCV VALVE INSPECTION.) • Is PCV valve okay?	Yes	Go to next step.
		No	Replace PCV, then go to Step 19.
10	**INSPECT FUEL LINE PRESSURE (LOW FUEL LINE PRESSURE)** • Turn ignition key to OFF. • Inspect fuel line pressure. (See F3–58 FUEL LINE PRESSURE INSPECTION.) • Is fuel line pressure okay?	Yes	Go to step 13.
		No	Go to next step.
11	**INSPECT FUEL PUMP MAXIMUM PRESSURE** • Stop engine. • Turn ignition key to ON (Engine OFF). • Perform fuel pump maximum pressure test. (See F3–58 FUEL LINE PRESSURE INSPECTION.) • Is fuel pump maximum pressure okay?	Yes	Go to next step.
		No	Inspect fuel pump circuit for open or poor connection. • Repair or replace suspected circuit. • If circuit is okay, replace fuel pump. Then go to Step 19.
12	**INSPECT FUEL LINE FROM FUEL PUMP TO FUEL DELIVERY PUMP** • Visually inspect fuel line for any leakage. • Is any fuel leakage found?	Yes	Replace suspected fuel line, then go to Step 19.
		No	Inspect fuel filters for following: • Restriction or clogging in fuel filter (high-pressure side). • Foreign materials or clogging in fuel filter (low-pressure side) — If restriction or clogging is found in fuel filter (high-pressure side), replace fuel filter. — If foreign materials or clogging is found inside fuel filter (low-pressure side), clean out fuel tank and filter. — If all items above are okay, replace pressure regulator. Then, go to Step 19.
13	**CHECK IGNITION COIL OPERATION** • Perform spark test. (See F3–275 Spark Test) • Do all cylinders show blinking condition?	Yes	Go to step 16.
		No	Go to next step.
14	**INSPECT POWER SUPPLY TERMINAL AT IGNITION COIL CONNECTOR** • Disconnect ignition coil connector. • Turn ignition key to ON (Engine OFF). • Measure voltage between ignition coil connector terminal D (harness-side) and body ground. • Is voltage reading **B+**?	Yes	Go to next step.
		No	Check for open circuit between ignition coil connector and ignition switch. Repair or replace wiring harness, then go to Step 19.
15	**INSPECT IGNITION COIL RESISTANCE** • Inspect ignition coil resistance. (See G–16 IGNITION COIL INSPECTION.) • Is coil resistance okay?	Yes	Go to next step.
		No	Replace ignition coil, then go to Step 19.

STEP	INSPECTION		ACTION
16	**INSPECT ENGINE COMPRESSION** • Inspect engine compression. (See B3–31 COMPRESSION INSPECTION.) • Is compression okay?	Yes	Go to next step.
		No	Implement engine overhaul for repairs, then go to next step.
17	**INSPECT FUEL INJECTOR OPERATION** • Turn ignition key to OFF. • Inspect injector. (See F3–70 FUEL INJECTOR INSPECTION.) • Is injector okay?	Yes	Go to next step.
		No	Replace injector, then go to Step 19.
18	**INSPECT SEALING OF ENGINE COOLANT PASSAGE** **Warning** • **Removing radiator cap when radiator is hot is dangerous. Scalding coolant and steam may shoot out and cause serious injury.** • **When removing radiator cap, wrap a thick cloth around and turn it slowly.** • Remove radiator cap. • Implement procedure to bleed air from engine coolant, then run engine at idle. • Are there any small bubbles, which makes engine coolant white at filler opening? **Note** • Large bubbles are normal since they are due to remaining air being released from engine coolant passage.	Yes	Air gets in due to poor sealing of head gasket or other areas between combustion chamber and engine coolant passage. Repair or replace faulty parts, then go to next step.
		No	Go to next step.
19	**VERIFY TROUBLESHOOTING OF DTC P0131 or P0132 COMPLETED** • Make sure to reconnect all disconnected connectors. • Turn ignition key to ON (Engine OFF). • Clear DTC from memory using WDS or equivalent. • Start engine. • Access ECT and RPM PIDs using WDS or equivalent. • Make sure that ECT PID is **above 80 °C {176 °F}**. • Increase and keep engine speed **above 1,500 rpm** for at **least 1 min**. • Is PENDING CODE of same DTC present?	Yes	Replace PCM, then go to next step. (See F3–81 PCM REMOVAL/INSTALLATION.)
		No	Go to next step.
20	**VERIFY AFTER REPAIR PROCEDURE** • Perform “After Repair Procedure”. (See F3–104 AFTER REPAIR PROCEDURE.) • Is there any DTC present?	Yes	Go to applicable DTC troubleshooting. (See F3–104 DTC TABLE.)
		No	Troubleshooting completed.

End Of Sub

DTC P0133

AME417001084W20

DTC P0133	Front HO2S circuit malfunction
DETECTION CONDITION	• PCM monitors inversion cycle period, lean-to-rich response time and rich-to-lean response time of the sensor. PCM calculates the average of the inversion cycle period-specified inversion cycles, average response time from lean-to-rich, and from rich-to-lean when following conditions are met. If any exceeds threshold, PCM determines that circuit has malfunction. **MONITORING CONDITIONS** — Drive mode 3 — Following conditions are met: • Calculation load **19.5—59.4%** (*1) • Engine speed **1,500—4,000 rpm** • Vehicle speed is above **3.76 km/h** • Engine coolant temperature is **above -10 °C {14 °F}** • Front HO2S signal inversion cycle is **above 10 cycles** *1:Maximum calculated load value varies depending on engine speed **Diagnostic support note** • This is an intermittent monitor. (OXYGEN SENSOR) • MIL illuminates if PCM detects the above malfunction condition in two consecutive drive cycles or in one drive cycle while the DTC for the same malfunction has been stored in the PCM. • DIAGNOSTIC MONITORING TEST RESULTS is available. • PENDING CODE is available if PCM detects the above malfunction condition during first drive cycle. • FREEZE FRAME DATA is available. • DTC is stored in the PCM memory.
POSSIBLE CAUSE	• Front HO2S deterioration • Front HO2S heater malfunction • Pressure regulator malfunction • Fuel pump malfunction • Fuel filter clogged or restricted • Fuel leakage in fuel line from fuel distribution pipe and fuel pump • Leakage in exhaust system • Purge solenoid valve malfunction • Purge solenoid hoses improper connection • Insufficient compression • Engine malfunction

Diagnostic procedure

STEP	INSPECTION		ACTION
1	**VERIFY FREEZE FRAME DATA HAS BEEN RECORDED** • Has FREEZE FRAME DATA been recorded?	Yes	Go to next step.
		No	Record FREEZE FRAME DATA on repair order, then go to next step.
2	**VERIFY RELATED SERVICE INFORMATION AVAILABILITY** • Check for related Service Information availability. • Is any related Service Information available?	Yes	Perform repair or diagnosis according to available Service Information. • If vehicle is not repaired, go to next step.
		No	Go to next step.
3	**VERIFY RELATED PENDING AND STORED DTCS** • Turn ignition key to OFF, then ON (Engine OFF). • Verify pending and /or stored DTCs using WDS or equivalent. • Is DTC P0443 also present?	Yes	Go to DTC P0443 troubleshooting procedures, then go to Step 13.
		No	Go to next step.
4	**IDENTIFY TRIGGER DTC FOR FREEZE FRAME DATA** • Is DTC P0133 on FREEZE FRAME DATA?	Yes	Go to next step.
		No	Go to troubleshooting procedures for DTC on FREEZE FRAME DATA. (See F3–104 DTC TABLE.)
5	**VERIFY CURRENT INPUT SIGNAL STATUS** • Warm up engine. • Access O2S11 PID using WDS or equivalent. • Inspect PID under following accelerator pedal conditions (in NEUTRAL). • Is PID reading okay? — **More than 0.55 V** when accelerator pedal is suddenly depressed (rich condition). — **Less than 0.55 V** just after release of accelerator pedal (lean condition).	Yes	Go to step 8.
		No	Go to next step.
6	**INSPECT INSTALLATION OF FRONT HO2S** • Inspect if front HO2S is loosely installed. • Is sensor installed securely?	Yes	Go to next step.
		No	Retighten sensor, then go to Step 13.

STEP	INSPECTION		ACTION
7	**INSPECT GAS LEAKAGE FROM EXHAUST SYSTEM** • Visually check if any gas leakage is found between exhaust manifold and front HO2S. • Is there any gas leakage?	Yes	Repair or replace any faulty exhaust parts, then go to Step 13.
		No	Replace sensor, then go to Step 13.
8	**INSPECT LONG TERM FUEL TRIM** • Access LONGFT1 PIDs • Compare it with FREEZE FRAME DATA recorded at Step 1. • Is it below FFD value?	Yes	Engine is operating under rich condition. Go to next step.
		No	Engine is operating under lean condition. Go to Step 10.
9	**INSPECT FUEL LINE PRESSURE (EXCESSIVE FUEL LINE PRESSURE)** • Turn ignition key to OFF. • Inspect fuel line pressure while engine is running. (See F3–58 FUEL LINE PRESSURE INSPECTION.) • Is fuel line pressure okay?	Yes	Go to next step.
		No	Inspect fuel pump maximum pressure. (See F3–65 FUEL PUMP UNIT INSPECTION.) • If any problem is found, repair or replace suspected parts. • If all items above are okay, replace fuel pump unit. Then go to Step 13.
10	**INSPECT FUEL LINE PRESSURE (LOW FUEL LINE PRESSURE)** • Turn ignition key to OFF. • Inspect fuel line pressure while engine is running. (See F3–58 FUEL LINE PRESSURE INSPECTION.) • Is fuel line pressure okay?	Yes	Go to step 13.
		No	Go to next step.
11	**INSPECT FUEL LINE FROM FUEL PUMP TO FUEL DELIVERY PIPE** • Visually inspect fuel line for any leakage. • Is any fuel leakage found?	Yes	Replace suspected fuel line, then go to Step 13.
		No	Inspect fuel filters for following: • Restriction or clogging in fuel filter (high-pressure side) • Foreign materials or clogging in fuel filter (low-pressure side) Perform following actions according to result. • If restriction or clogging is found in fuel filter (high-pressure side), replace fuel pump unit. • If foreign material or clogging is found in fuel filter (low-pressure side), clean out fuel tank and filter. • If all items above are okay, replace fuel pump unit. Then go to Step 13.
12	**INSPECT SEALING OF ENGINE COOLANT PASSAGE** **Warning** • **Removing radiator cap when radiator is hot is dangerous. Scalding coolant and steam may shoot out and cause serious injury.** • **When removing radiator cap, wrap a thick cloth around and turn it slowly.** • Remove radiator cap. • Implement procedure to bleed air from engine coolant, then run engine at idle. • Are there any small bubbles, which makes engine coolant white at filler opening? **Note** • Large bubbles are normal since they are due to remaining air being released from engine coolant passage.	Yes	Air gets in due to poor sealing of head gasket or other areas between combustion chamber and engine coolant passage. Repair or replace faulty parts, then go to next step.
		No	Go to next step.
13	**VERIFY TROUBLESHOOTING OF DTC P0133 COMPLETED** • Make sure to reconnect all disconnected connectors. • Turn ignition switch to ON (Engine OFF). • Clear DTC from PCM memory using WDS or equivalent. • Run OBD DRIVE MODE. • Is PENDING CODE of same DTC present?	Yes	Replace PCM, then go to next step. (See F3–81 PCM REMOVAL/INSTALLATION.)
		No	Go to next step.
14	**VERIFY AFTER REPAIR PROCEDURE** • Perform “After Repair Procedure”. (See F3–104 AFTER REPAIR PROCEDURE.) • Is there DTC present?	Yes	Go to applicable DTC troubleshooting. (See F3–104 DTC TABLE.)
		No	Troubleshooting completed.

End Of Sie

DTC P0134

AME417001084W21

DTC P0134	Front HO2S circuit no activity detected
DETECTION CONDITION	• PCM monitors input voltage from front HO2S when the following conditions are met. If input voltage from does not **exceed 0.55 V** for **84 s** period, PCM determines that sensor circuit is not activated. **MONITORING CONDITIONS** — HO2S, HO2S heater and TWC repair verification drive mode — Following conditions are met • Engine speed is **above 1,500 rpm**. • Engine coolant temperature is **above 80 °C {176 °F}**. **Diagnostic support note** • This is a continuous monitor (CCM). • MIL illuminates if PCM detects the above malfunction condition in two consecutive drive cycles or in one drive cycle while the DTC for the same malfunction has been stored in the PCM. • PENDING CODE is available if PCM detects the above malfunction condition during first drive cycle. • FREEZE FRAME DATA is available. • DTC is stored in the PCM memory.
POSSIBLE CAUSE	• Front HO2S deterioration • Front HO2S heater malfunction • Leakage exhaust system • Open or short to ground circuit between front HO2S terminal A and PCM terminal 1AB • Insufficient compression • Engine malfunction

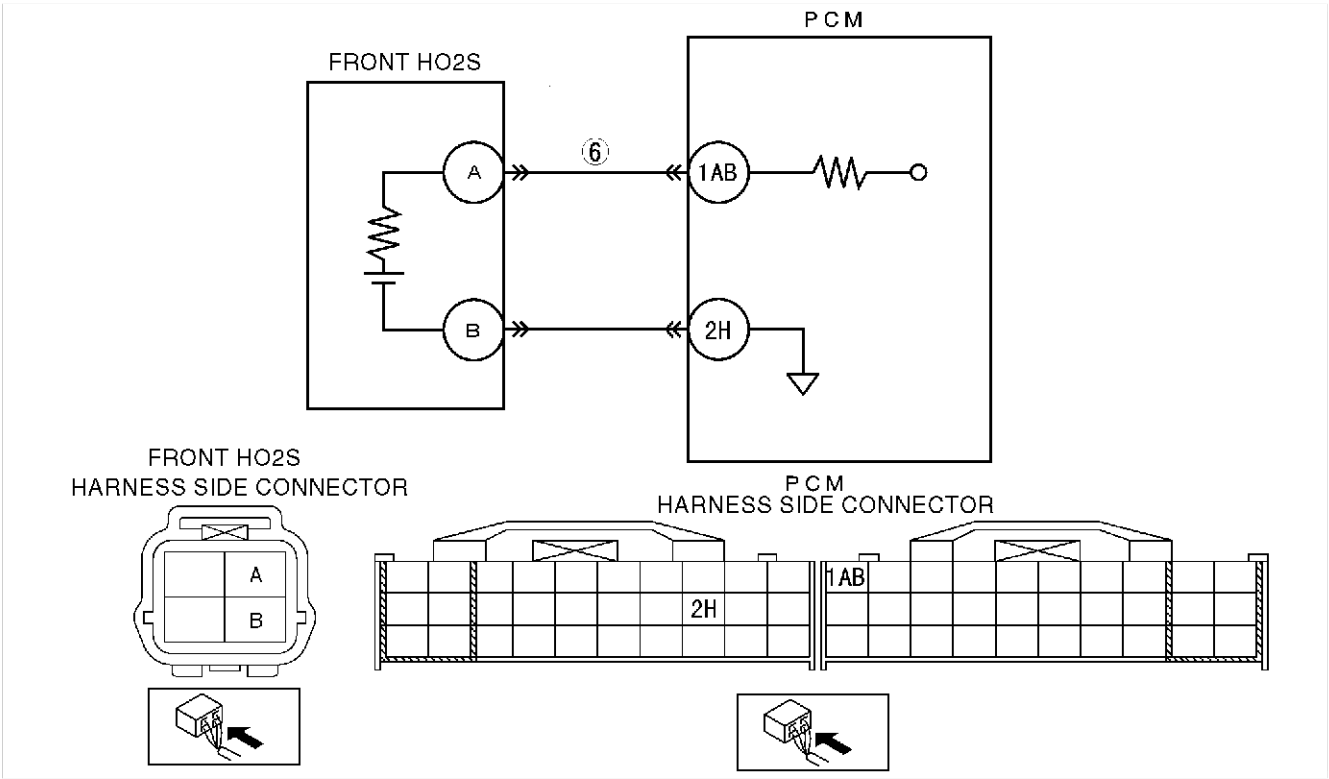

Diagnostic procedure

STEP	INSPECTION		ACTION
1	**PERFORM DTC CONFIRMATION PROCEDURE** • Perform DTC CONFIRMATION PROCEDURE. (See F3–103 DTC CONFIRMATION PROCEDURE.) • Is same DTC present?	Yes	Go to next step.
		No	Intermittent concern exists. Go to INTERMITTENT CONCERN TROUBLESHOOTING procedure. (See F3–270 INTERMITTENT CONCERN TROUBLESHOOTING.)

STEP	INSPECTION		ACTION
2	**VERIFY RELATED PENDING AND STORED DTCS** **Note** • If fuel monitor DTC, DTC P0131or P0132 is retrieved, ignore it until P0134 is fixed. • Turn ignition key to OFF, then ON (Engine OFF). • Verify pending and stored DTCs using WDS or equivalent. • Is any other DTC present?	Yes	Go to appropriate DTC troubleshooting procedures.
		No	Go to next step.
3	**IDENTIFY TRIGGER DTC FOR FREEZE FRAME DATA** • Is DTC P0134 on FREEZE FRAME DATA?	Yes	Go to next step.
		No	Go to troubleshooting procedures for DTC on FREEZE FRAME DATA. (See F3–104 DTC TABLE.)
4	**VERIFY CURRENT INPUT SIGNAL STATUS** • Warm up engine. • Access O2S11 for P0134 PID using WDS or equivalent. • Verify PID while racing engine (in NEUTRAL). • Is PID reading okay? — **More than 0.55 V** when accelerator pedal is suddenly depressed (rich condition). — **Less than 0.55 V** just after release of accelerator pedal (lean condition)	Yes	Go to step 7.
		No	Go to next step.
5	**INSPECT INSTALLATION OF FRONT HO2S** • Inspect if front HO2S is loosely installed. • Is sensor installed securely?	Yes	Go to next step.
		No	Install sensor securely, then go to Step 9.
6	**INSPECT GAS LEAKAGE FROM EXHAUST SYSTEM** • Visually check if any gas leakage is found between exhaust manifold and front HO2S. • Is there any gas leakage?	Yes	Repair or replace any faulty exhaust parts, then go to Step 9.
		No	• Inspect the following harnesses for open or short to ground circuit, repair or replace harness if necessary — Front HO2S terminal A (harness-side) to PCM terminal 1AB (harness-side) • Repair or replace harness if necessary. • If all items above are okay, replace faulty sensor. Then go to Step 9.
7	**INSPECT SEALING OF ENGINE COOLANT PASSAGE** **Warning** • **Removing radiator cap when radiator is hot is dangerous. Scalding coolant and steam may shoot out and cause serious injury.** • **When removing radiator cap, wrap a thick cloth around and turn it slowly.** • Remove radiator cap. • Implement procedure to bleed air from engine coolant, then run engine at idle. • Are there any small bubbles, which makes engine coolant white at filler opening? **Note** • Large bubbles are normal since they are due to remaining air being released from engine coolant passage.	Yes	Air gets in due to poor sealing of head gasket or other areas between combustion chamber and engine coolant passage. Repair or replace faulty parts, then go to Step 9.
		No	Go to next step.
8	**INSPECT ENGINE COMPRESSION** • Inspect engine compression. (See B3–31 COMPRESSION INSPECTION.) • Is compression okay?	Yes	Go to next step.
		No	Implement engine overhaul for repairs, then go to next step.

STEP	INSPECTION		ACTION
9	**VERIFY TROUBLESHOOTING OF DTC P0134 COMPLETED** • Make sure to reconnect all disconnected connectors. • Turn ignition key to ON (Engine OFF). • Clear DTC from memory using WDS or equivalent. • Perform KOER self-test. (See F3–103 KOEO/KOER SELF-TEST PROCEDURE.) • Is same DTC present?	Yes	Replace PCM, then go to next step. (See F3–81 PCM REMOVAL/INSTALLATION.)
		No	Go to next step.
10	**VERIFY AFTER REPAIR PROCEDURE** • Perform “After Repair Procedure”. (See F3–104 AFTER REPAIR PROCEDURE.) • Is there any DTC present?	Yes	Go to applicable DTC troubleshooting. (See F3–104 DTC TABLE.)
		No	Troubleshooting completed.

End Of Sie

DTC P0138

AME417001084W22

DTC P0138	Rear HO2S circuit high input
DETECTION CONDITION	• PCM monitors input voltage from rear HO2S. If input voltage from rear HO2S sensor is **above 0.45 V** for **7 s** during deceleration fuel cut, PCM determines that circuit input is high. **Diagnostic support note** • This is a continuous monitor (CCM). • MIL illuminates if PCM detects the above malfunction condition in two consecutive drive cycles or in one drive cycle while the DTC for the same malfunction has been stored in the PCM. • PENDING CODE is available if PCM detects the above malfunction condition during first drive cycle. • FREEZE FRAME DATA is available. • DTC is stored in the PCM memory.
POSSIBLE CAUSE	• Rear HO2S malfunction • Short to power circuit in wiring between rear HO2S terminal A and PCM terminal 1Y

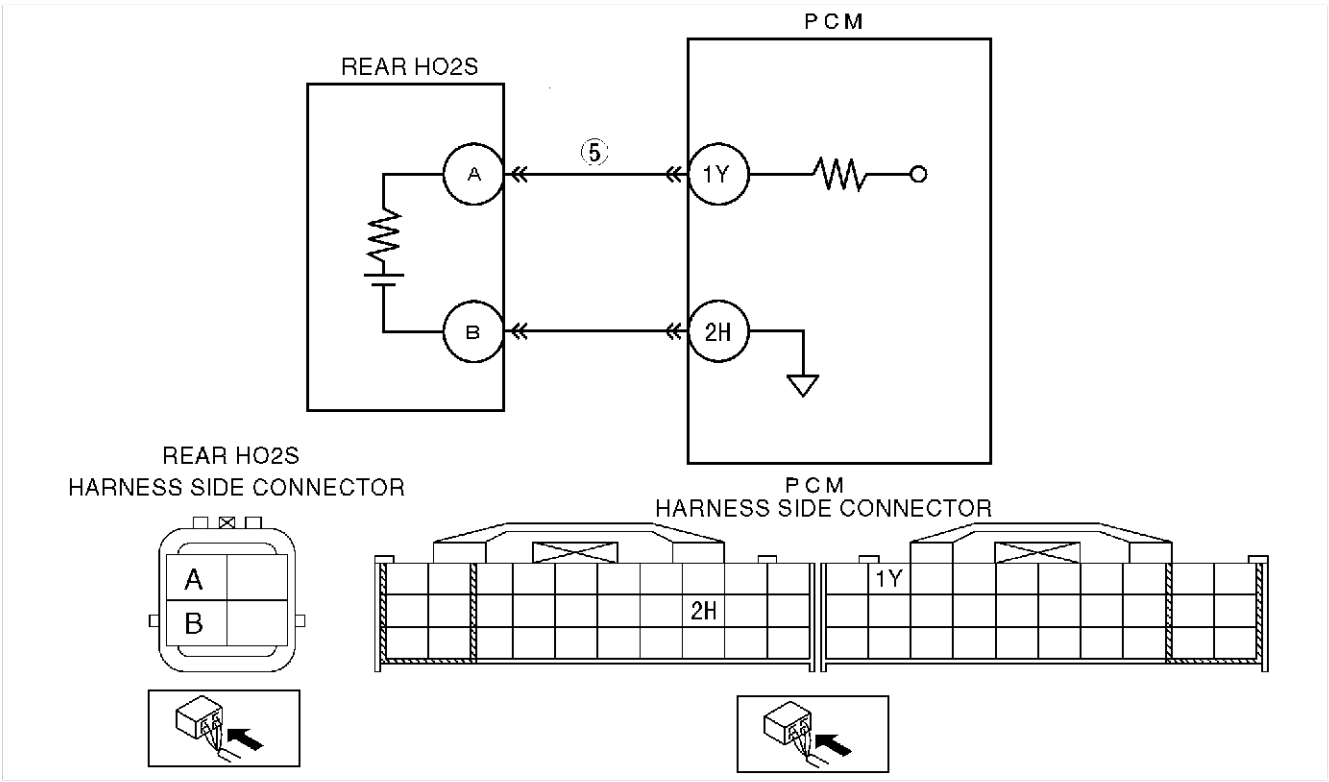

Diagnostic procedure

STEP	INSPECTION		ACTION
1	**VERIFY FREEZE FRAME DATA HAS BEEN RECORDED** • Has FREEZE FRAME DATA been recorded?	Yes	Go to next step.
		No	Record FREEZE FRAME DATA on repair order, then go to next step.
2	**VERIFY RELATED SERVICE INFORMATION AVAILABILITY** • Check for related Service Information availability. • Is any related Service Information available?	Yes	Perform repair or diagnosis according to available Service Information. • If vehicle is not repaired, go to next step.
		No	Go to next step.
3	**VERIFY RELATED PENDING OR STORED DTCS** • Turn ignition key to OFF, then ON (Engine OFF). • Verify pending code or stored DTCs using WDS or equivalent. • Is any other DTC present?	Yes	Go to appropriate DTC troubleshooting procedures. (See F3–104 DTC TABLE.)
		No	Go to next step.
4	**IDENTIFY TRIGGER DTC FOR FREEZE FRAME DATA** • Is DTC P0138 on FREEZE FRAME DATA?	Yes	Go to next step.
		No	Go to troubleshooting procedures for DTC on FREEZE FRAME DATA. (See F3–104 DTC TABLE.)
5	**INSPECT REAR HO2S SIGNAL CIRCUIT FOR SHORT TO POWER SUPPLY CIRCUIT** • Turn ignition key to OFF. • Disconnect rear HO2S connector. • Turn ignition key to ON (Engine OFF). • Measure voltage between rear HO2S terminal A (harness-side) and body ground. • Is there any voltage reading?	Yes	Replace short to power supply circuit, then go to Step 7.
		No	Go to next step.
6	**VERIFY CURRENT INPUT SIGNAL STATUS** • Start engine. • Access O2S12 PID using WDS or equivalent. • Verify PID while racing engine at least **10 times** (in NEUTRAL). • Does PID reading stay **above 0.45 V**?	Yes	Repair or replace sensor, then go to next step.
		No	Go to next step.
7	**VERIFY TROUBLESHOOTING OF DTC P0138 COMPLETED** • Make sure to reconnect all disconnected connectors. • Turn ignition key to ON (Engine OFF). • Clear DTC from memory using WDS or equivalent. • Run PCM adaptive memory procedure drive mode and HO2S heater, HO2S, and TWC repair verification drive mode. (See F3–101 OBD DRIVE MODE.) • Is PENDING CODE of same DTC present.	Yes	Replace PCM, then go to next step. (See F3–81 PCM REMOVAL/INSTALLATION.)
		No	Go to next step.
8	**VERIFY AFTER REPAIR PROCEDURE** • Perform “After Repair Procedure”. (See F3–104 AFTER REPAIR PROCEDURE.) • Is there any DTC present?	Yes	Go to applicable DTC troubleshooting. (See F3–104 DTC TABLE.)
		No	Troubleshooting completed.

End Of Ste

DTC P0140

AME417001084W23

DTC P0140	Rear HO2S circuit no activity detected
DETECTION CONDITION	• PCM monitors input voltage from rear HO2S when the following conditions are met. If input voltage from sensor does not **exceed 0.55 V** for **30 s** period, PCM determines that sensor circuit is not activated. **MONITORING CONDITIONS** — HO2S, HO2S heater and TWC repair verification drive mode — Following conditions are met: • Engine speed is **above 1,500 rpm**. • Engine coolant temperature is **above 80 °C {158 °F}**. **Diagnostic support note** • This is a continuous monitor (CCM). • MIL illuminates if PCM detects the above malfunction condition in two consecutive drive cycles or in one drive cycle while the DTC for the same malfunction has been stored in the PCM. • PENDING CODE is available if PCM detects the above malfunction condition during first drive cycle. • FREEZE FRAME DATA is available. • DTC is stored in the PCM memory.
POSSIBLE CAUSE	• Rear HO2S deterioration • Rear HO2S heater malfunction • Leakage exhaust system • Open or short to ground circuit between rear HO2S terminal A and PCM terminal 1Y • Insufficient compression • Engine malfunction

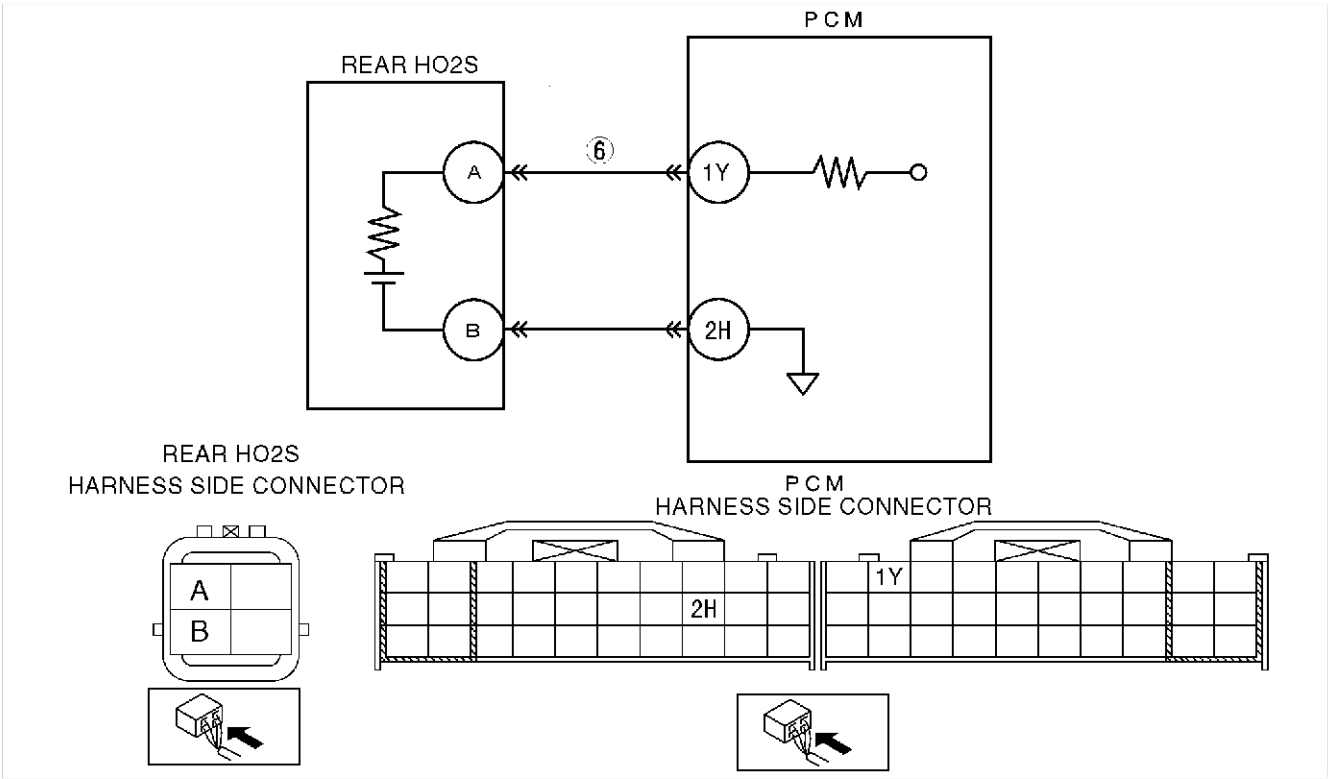

Diagnostic procedure

STEP	INSPECTION		ACTION
1	**PERFORM DTC CONFIRMATION PROCEDURE** • Perform DTC CONFIRMATION PROCEDURE. (See F3–103 DTC CONFIRMATION PROCEDURE.) • Is same DTC present?	Yes	Go to next step.
		No	Intermittent concern exists. Go to INTERMITTENT CONCERN TROUBLESHOOTING procedure. (See F3–270 INTERMITTENT CONCERN TROUBLESHOOTING.)

STEP	INSPECTION		ACTION
2	**VERIFY RELATED PENDING AND STORED DTCS** **Note** • If fuel monitor DTC, DTC P0131or P0132 is retrieved, ignore it until P0140 is fixed. • Turn ignition key to OFF, then ON (Engine OFF). • Verify pending and stored DTCs using WDS or equivalent. • Is any other DTC present?	Yes	Go to appropriate DTC troubleshooting procedures. (See F3–104 DTC TABLE.)
		No	Go to next step.
3	**IDENTIFY TRIGGER DTC FOR FREEZE FRAME DATA** • Is DTC P0140 on FREEZE FRAME DATA?	Yes	Go to next step.
		No	Go to troubleshooting procedures for DTC on FREEZE FRAME DATA. (See F3–104 DTC TABLE.)
4	**VERIFY CURRENT INPUT SIGNAL STATUS** • Warm up engine. • Access O2S12 for P0140 or O2S22 for P0160 PID using WDS or equivalent. • Verify PID while racing engine at least **10 times** (in NEUTRAL). • Is PID reading okay? — **More than 0.55 V** at least once during engine racing.	Yes	Go to step 7.
		No	Go to next step.
5	**INSPECT INSTALLATION OF REAR HO2S** • Inspect if rear HO2S is loosely installed. • Is sensor installed securely?	Yes	Go to next step.
		No	Install sensor securely, then go to Step 9.
6	**INSPECT GAS LEAKAGE FROM EXHAUST SYSTEM** • Visually inspect if any gas leakage is found between exhaust pipe and rear HO2S. • Is there any gas leakage?	Yes	Repair or replace any faulty exhaust parts, then go to Step 9.
		No	• Inspect the following harnesses for open or short to ground circuit, repair or replace harness if necessary. — Rear HO2S terminal A (harness-side) to PCM terminal 1Y (harness-side) • Repair or replace harness if necessary. • If all items above are okay, replace faulty sensor. Then go to Step 9.
7	**INSPECT SEALING OF ENGINE COOLANT PASSAGE** **Warning** • **Removing radiator cap when radiator is hot is dangerous. Scalding coolant and steam may shoot out and cause serious injury.** • **When removing radiator cap, wrap a thick cloth around and turn it slowly.** • Remove radiator cap. • Implement procedure to bleed air from engine coolant, then run engine at idle. • Are there any small bubbles, which makes engine coolant white at filler opening? **Note** • Large bubbles are normal since they are due to remaining air being released from engine coolant passage.	Yes	Air gets in due to poor sealing of head gasket or other areas between combustion chamber and engine coolant passage. Repair or replace faulty parts, then go to Step 9.
		No	Go to next step.
8	**INSPECT ENGINE COMPRESSION** • Inspect engine compression. (See B3–31 COMPRESSION INSPECTION.) • Is compression okay?	Yes	Go to next step.
		No	Implement engine overhaul for repairs, then go to next step.

F3

STEP	INSPECTION		ACTION
9	**VERIFY TROUBLESHOOTING OF DTC P0140 COMPLETED** • Make sure to reconnect all disconnected connectors. • Turn ignition key to ON (Engine OFF). • Clear DTC from memory using WDS or equivalent. • Perform KOER self-test. (See F3–103 KOEO/KOER SELF-TEST PROCEDURE.) • Is PENDING CODE of same DTC present?	Yes	Replace PCM, then go to next step. (See F3–81 PCM REMOVAL/INSTALLATION.)
		No	Go to next step.
10	**VERIFY AFTER REPAIR PROCEDURE** • Perform “After Repair Procedure”. (See F3–104 AFTER REPAIR PROCEDURE.) • Is there any DTC present?	Yes	Go to applicable DTC troubleshooting. (See F3–104 DTC TABLE.)
		No	Troubleshooting completed.

End Of Sie

DTC P0171

AME417001084W24

DTC P0171	Fuel trim system too lean
DETECTION CONDITION	• PCM monitors short term fuel trim (SHRTFT) and long term fuel trim (LONGFT) values during OBD DRIVE MODE operation. If fuel trim exceeds preprogrammed criteria, PCM determines that the fuel system is too lean. **Diagnostic support note** • This is a continuous monitor. (FUEL SYSTEM) • MIL illuminates if PCM detects the above malfunction condition in two consecutive drive cycles or in one drive cycle while the DTC for the same malfunction has been stored in the PCM. • PENDING CODE is available if PCM detects the above malfunction conditions during first drive cycle. • FREEZE FRAME DATA is available. • DTC is stored in the PCM memory.
POSSIBLE CAUSE	• Misfire • Front HO2S deterioration • Front HO2S heater malfunction • Pressure regulator malfunction • Fuel pump malfunction • Fuel filter clogged or restricted • Fuel leakage in fuel line from fuel delivery pipe and fuel pump • Fuel return hose clogged • Leakage exhaust system • Purge solenoid valve malfunction • Purge solenoid hoses improper connection • Insufficient compression

Diagnostic procedure

STEP	INSPECTION		ACTION
1	**VERIFY FREEZE FRAME DATA HAS BEEN RECORDED** • Has FREEZE FRAME DATA been recorded?	Yes	Go to next step.
		No	Record FREEZE FRAME DATA on repair order, then go to next step.
2	**VERIFY RELATED SERVICE INFORMATION AVAILABILITY** • Check for related Service Information availability. • Is any related Service Information available?	Yes	Perform repair or diagnosis according to available Service Information. • If vehicle is not repaired, go to next step.
		No	Go to next step.
3	**VERIFY RELATED PENDING CODE OR STORED DTCS** • Turn ignition key to OFF, then ON (Engine OFF). • Verify related PENDING CODE or stored DTCs. • Is any other DTC present?	Yes	If misfire DTC is present, go to step 8. If other DTC is present, go to appropriate DTC troubleshooting procedures. (See F3–104 DTC TABLE.)
		No	If drive ability concern is present, go to Step 8. If not, go to next step.
4	**IDENTIFY TRIGGER DTC FOR FREEZE FRAME DATA** • Is DTC P0171 on FREEZE FRAME DATA?	Yes	Go to next step.
		No	Go to troubleshooting procedures for DTC on FREEZE FRAME DATA.

STEP	INSPECTION		ACTION
5	**VERIFY CURRENT INPUT SIGNAL STATUS (IGNITION KEY TO ON/IDLE)** • Access ECT, MAF, TP and VSS PIDs using WDS or equivalent. (See F3–83 PCM INSPECTION.) • Is there any signal that is far out of specification when ignition key is at ON and engine is running?	Yes	Inspect suspected sensor and excessive resistance in related wiring harnesses. Repair or replace if necessary. Then go to Step 18.
		No	Go to next step.
6	**VERIFY CURRENT INPUT SIGNAL STATUS UNDER TROUBLE CONDITION** • Inspect same PIDs as Step 5 while simulating FREEZE FRAME DATA condition. • Is there any input signal which causes drastic changes?	Yes	Inspect suspected sensor and related wiring harnesses, and repair or replace it. Then go to Step 18.
		No	Go to next step.
7	**VERIFY CURRENT INPUT SIGNAL STATUS OF FRONT HO2S** • Access O2S11 PID using WDS or equivalent. • Inspect PID under following accelerator pedal condition (in NEUTRAL). — **Above 0.55 V** when accelerator pedal is suddenly depressed (rich condition). — **Below 0.55 V** just after release of accelerator pedal (lean condition) • Is PID reading okay?	Yes	Inspect for air suction in following due to cracks, damage and loose parts: • From air cleaner to throttle body • From throttle body to dynamic chamber • From dynamic chamber to intake manifold • Vacuum hoses **Note** • Engine speed may change when rust penetrating agent is sprayed on the air suction area. Repair or replace any faulty part, then go to Step 18.
		No	Visually inspect for any gas leakage between exhaust manifold and front HO2S. • If there is no leakage, replace front HO2S. Then go to Step 18.
8	**INSPECT MAF PID** • Start engine. • Access MAF PID using WDS or equivalent. • Verify that MAF PID changes quickly according to engine RPM while racing engine. • Is MAF PID response okay?	Yes	Go to next step.
		No	Replace Mass air flow sensor, then go to Step 18.
9	**INSPECT FOR EXCESSIVE AIR SUCTION OF INTAKE-AIR SYSTEM** • Visually inspect for loose, cracked or damaged hoses in intake-air system. • Is there any malfunction?	Yes	Repair or replace source of air suction, then go to Step 18.
		No	Go to next step.
10	**INSPECT FUEL LINE PRESSURE** • Turn ignition key to OFF. **Note** • If engine won't start, inspect fuel line pressure with ignition key at ON. • Inspect fuel line pressure while engine running. (See F3–58 FUEL LINE PRESSURE INSPECTION.) • Is fuel line pressure okay?	Yes	Go to step 12.
		No	• If fuel line pressure is too high: Replace fuel pump unit, then go to Step 18. • If fuel line pressure is too low: Go to next step.
11	**INSPECT FUEL LINE FROM FUEL PUMP TO FUEL DELIVERY PIPE** • Visually inspect fuel line for any leakage. • Is any fuel leakage found?	Yes	Replace suspected fuel line, then go to Step 18.
		No	Inspect fuel filters for following: • Restriction or clogging in fuel filter (high-pressure side). • Foreign materials or clogging in fuel filter (low-pressure side) Perform following actions depending on the result above. • If restriction or clogging is found in fuel filter (high-pressure side), replace fuel pump unit. • If foreign materials or clogging is found in fuel filter (low-pressure side), clean out fuel tank and filter (low-pressure side). • If all items above are okay, replace fuel pump unit. Then go to Step 18.

STEP	INSPECTION		ACTION
12	**CHECK IGNITION COIL OPERATION AND HIGH-TENSION LEAD WITH TIMING LIGHT** • Verify blinking condition for each cylinder using timing light at idle. • Do all cylinders show blinking condition?	Yes	Go to Step 16.
		No	Go to next step.
13	**CHECK HIGH-TENSION LEADS OF NON-BLINKING CYLINDER** • Turn ignition key to OFF. • Inspect high-tension leads for installation condition, corrosion on terminal, open lead and damaged cover. • Is condition of high-tension lead okay?	Yes	Go to next step.
		No	Replace faulty high-tension lead, then go to Step 18.
14	**INSPECT POWER SUPPLY TERMINAL AT IGNITION COIL CONNECTOR** • Disconnect ignition coil connector. • Turn ignition key to ON (Engine OFF). • Check voltage at ignition coil connector terminal B (harness-side) and body ground. • Is voltage **B+**?	Yes	Go to next step.
		No	Inspect for open circuit between ignition coil connector and ignition switch. Repair or replace wiring harness, then go to Step 18.
15	**INSPECT IGNITION COIL RESISTANCE** • Inspect ignition coil resistance. (See G–16 IGNITION COIL INSPECTION.) • Is coil resistance okay?	Yes	Go to next step.
		No	Replace ignition coil, then go to Step 18.
16	**INSPECT ENGINE COMPRESSION** • Inspect engine compression. (See B3–31 COMPRESSION INSPECTION.) • Is compression okay?	Yes	Go to next step.
		No	Implement engine overhaul for repairs, then go to Step 18.
17	**INSPECT FUEL INJECTOR OPERATION** • Remove fuel injector. • Inspect injector operation. (SeeF3–70 FUEL INJECTOR INSPECTION.) • Is fuel injector okay?	Yes	Go to next step.
		No	Replace injector, then go to next step.
18	**VERIFY TROUBLESHOOTING OF DTC P0171 COMPLETED** • Make sure to reconnect all disconnected connectors. • Clear DTC from PCM memory using WDS or equivalent. • Run OBD DRIVE MODE. (See F3–101 OBD DRIVE MODE.) • Is PENDING CODE of same DTC present?	Yes	Replace PCM, then go to next step. (See F3–81 PCM REMOVAL/INSTALLATION.)
		No	Go to next step.
19	**VERIFY AFTER REPAIR PROCEDURE** • Perform “After Repair Procedure”. (See F3–104 AFTER REPAIR PROCEDURE.) • Is there any DTC present?	Yes	Go to applicable DTC troubleshooting. (See F3–104 DTC TABLE.)
		No	Troubleshooting completed.

End Of Sie

DTC P0172

AME417001084W25

DTC P0172	Fuel trim system too rich
DETECTION CONDITION	• PCM monitors short fuel trim (SHRTFT) and long fuel trim (LONGFT) values during OBD DRIVE MODE operation. If fuel trim exceeds preprogrammed criteria, PCM determines that fuel system is too rich. **Diagnostic support note** • This is a continuous monitor. (FUEL SYSTEM) • MIL illuminates if PCM detects the above malfunction condition in two consecutive drive cycles or in one drive cycle while the DTC for the same malfunction has been stored in the PCM. • PENDING CODE is available if PCM detects the above malfunction condition. • FREEZE FRAME DATA is available. • DTC is stored in the PCM memory.
POSSIBLE CAUSE	• Misfire • Front HO2S deterioration • Front HO2S heater malfunction • Pressure regulator malfunction • Fuel pump malfunction • Fuel return hose clogged • Purge solenoid valve malfunction • Purge solenoid hoses improper connection • PCV valve malfunction

Diagnostic procedure

STEP	INSPECTION		ACTION
1	**VERIFY FREEZE FRAME DATA HAS BEEN RECORDED** • Has FREEZE FRAME DATA been recorded?	Yes	Go to next step.
		No	Record FREEZE FRAME DATA on repair order, then go to next step.
2	**VERIFY RELATED SERVICE INFORMATION AVAILABILITY** • Check for related Service Information availability. • Is any related Service Information available?	Yes	Perform repair or diagnosis according to available Service Information. • If vehicle is not repaired, go to next step.
		No	Go to next step.
3	**VERIFY RELATED PENDING CODE OR STORED DTCS** • Turn ignition key to OFF, then ON (Engine OFF). • Verify related pending code or stored DTCs. • Is other DTCs present?	Yes	Go to appropriate DTC troubleshooting procedures.
		No	If driveability concern or rough idle is present, go to Step 9. If not, go to next step.
4	**IDENTIFY TRIGGER DTC FOR FREEZE FRAME DATA** • Is DTC P0172 on FREEZE FRAME DATA?	Yes	Go to next step.
		No	Go to troubleshooting procedures for DTC on FREEZE FRAME DATA.
5	**VERIFY CURRENT INPUT SIGNAL STATUS (IGNITION KEY TO ON/IDLE)** • Access ECT, MAF, TP and VSS PIDs using WDS or equivalent. • Is there any signal that is far out of specification when ignition key is at ON and engine is running?	Yes	Inspect suspected sensor and excessive resistance in related wiring harnesses. Repair or replace if necessary. Then go to Step 11.
		No	Go to next step.
6	**VERIFY CURRENT INPUT SIGNAL STATUS UNDER TROUBLE CONDITION** • Inspect same PIDs as is Step 4 while simulating FREEZE FRAME DATA condition. • Is there any input signal which causes drastic changes?	Yes	Inspect suspected sensor and related wiring harnesses, and repair or replace it. Then go to Step 11.
		No	Go to next step.
7	**VERIFY CURRENT INPUT SIGNAL STATUS OF FRONT HO2S** • Access O2S11 PID using WDS or equivalent. • Verify PID while racing engine (in NEUTRAL). • Is PID reading okay? — **Above 0.55 V** when accelerator pedal is suddenly depressed (rich condition). — **Below 0.55 V** just after release of accelerator pedal (lean condition)	Yes	Go to next step.
		No	Replace suspected front HO2S. Then go to Step 11.

STEP	INSPECTION		ACTION
8	**INSPECT FUEL LINE PRESSURE** • Turn ignition key to OFF. • Connect fuel gauge to fuel pipe. • Start engine and run it at idle. • Inspect fuel line pressure while engine running. (See F3–58 FUEL LINE PRESSURE INSPECTION.) • Is fuel line pressure okay?	Yes	Go to next step.
		No	Replace fuel pump unit, then go to Step 11
9	**INSPECT PURGE SOLENOID VALVE FOR STUCK OPEN** • Turn ignition key to OFF. • Disconnect both hoses from purge solenoid valve. • Blow air through purge solenoid valve. • Does air blow through?	Yes	Replace purge solenoid valve. Then go to Step 11.
		No	Go to next step.
10	**INSPECT PCV VALVE OPERATION** • Inspect PCV valve operation. (See F3–79 PCV VALVE INSPECTION.) • Is PCV valve okay?	Yes	Go to next step.
		No	Replace PCV valve, then go to next step.
11	**VERIFY TROUBLESHOOTING OF DTC P0172 COMPLETED** • Make sure to reconnect all disconnected connectors. • Turn ignition key to ON (Engine OFF). • Clear DTC from memory using WDS or equivalent. • Run OBD DRIVE MODE. (See F3–101 OBD DRIVE MODE.) • Is PENDING CODE of same DTC present?	Yes	Replace PCM, then go to next step. (See F3–81 PCM REMOVAL/INSTALLATION.)
		No	Go to next step.
12	**VERIFY AFTER REPAIR PROCEDURE** • Perform “After Repair Procedure”. (See F3–104 AFTER REPAIR PROCEDURE.) • Is there any DTC present?	Yes	Go to applicable DTC troubleshooting. (See F3–104 DTC TABLE.)
		No	Troubleshooting completed.

End Of Sie

DTC P0300

AME417001085W01

DTC P0300	Random misfire detection
DETECTION CONDITION	• PCM monitors CKP sensor input signal interval time. PCM calculates change of interval time for each cylinder. If change of interval time exceeds preprogrammed criteria, PCM detects a misfire in the corresponding cylinder. While the engine is running, the PCM counts number of misfires that occurs at **200 crankshaft revolutions** and **1,000 crankshaft revolutions** and calculates misfire ratio for each crankshaft revolution. If the ratio exceeds the preprogrammed criteria, PCM determines that a misfire, which can damage catalytic converter or affect emission performance, has occurred. **Diagnostic support note** • This is a continuous monitor (MISFIRE). • MIL illuminates if PCM detects the misfire which affects emission performance in two consecutive drive cycles or in one drive cycle while the DTC for the same malfunction has been stored in the PCM. • MIL flashes if PCM detects the misfire which can damage the catalytic converter during first drive cycle. Therefore, PENDING CODE is not available while MIL flashes. • PENDING CODE is available if PCM detects the misfire which affects emission performance during first drive cycle. • FREEZE FRAME DATA is available. • DTC is stored in the PCM memory.

DTC P0300	Random misfire detection
POSSIBLE CAUSE	• CKP sensor malfunction • CMP sensor malfunction • Ignition coil malfunction • High-tension lead malfunction • MAF sensor contamination • Excess air suction in intake air system (between MAF sensor and intake manifold) • Fuel pump malfunction • Fuel pressure regulator malfunction • Fuel line clogged • Fuel filter clogged • Fuel leakage in fuel line • Fuel runout • Poor quality fuel • Purge control solenoid valve malfunction • PCV valve malfunction • EGR valve malfunction • Vacuum hoses damages or improper connection • Related connector and terminal malfunction • Related wiring harness malfunction • Insufficient compression

Diagnostic procedure

STEP	INSPECTION		ACTION
1	**VERIFY FREEZE FRAME DATA HAS BEEN RECORDED** • Has FREEZE FRAME DATA been recorded?	Yes	Go to next step.
		No	Record FREEZE FRAME DATA on repair order, then go to next step.
2	**VERIFY RELATED SERVICE INFORMATION AVAILABILITY** • Check for related Service Information availability. • Is any related Service Information available?	Yes	Perform repair or diagnosis according to available Service Information. • If vehicle is not repaired, go to next step.
		No	Go to next step.
3	**VERIFY RELATED PENDING CODE OR STORED DTCs** • Turn ignition key to OFF then ON (Engine OFF). • Verify related pending code or stored DTCs. • Are any other DTCs present?	Yes	Go to appropriate DTC troubleshooting. (See F3–104 DTC TABLE.)
		No	Go to next step.
4	**VERIFY CURRENT INPUT SIGNAL STATUS (IGNITION KEY TO ON/IDLE)** • Access BOO, ECT, IAT, MAF, RPM, TP, and VSS PIDs using WDS or equivalent. (See F3–83 PCM INSPECTION.) • Is there any signal that is far out of specification when ignition switch is at ON and engine runs at idle?	Yes	Inspect suspected circuit and/or part according to inspection results. (See F3–83 PCM INSPECTION.) Then go to Step 21.
		No	Go to next step.
5	**VERIFY CURRENT INPUT SIGNAL STATUS UNDER TROUBLE CONDITION** • Inspect same PIDs as in Step 4 while simulating FREEZE FRAME DATA condition. • Is there any signal which causes drastic changes?	Yes	Inspect suspected circuit and/or part according to inspection results. (See F3–83 PCM INSPECTION.) Then go to Step 21.
		No	Go to next step.
6	**INSPECT CMP SENSOR** • Inspect CMP sensor. (See F3–92 CAMSHAFT POSITION (CMP) SENSOR INSPECTION.) • Is CMP sensor okay?	Yes	Go to next step.
		No	Inspect installation condition of and damage to timing belt and gears, repair faulty parts. • If it is okay, replace CMP sensor. Then go to Step 21.
7	**VERIFY CKP SENSOR INSTALLATION CONDITION** • Inspect for CKP sensor looseness. • Is CKP sensor loose?	Yes	Retighten CKP sensor, then go to Step 21.
		No	Go to next step.
8	**INSPECT IGNITION COIL OPERATION AND HIGH-TENSION LEAD WITH TIMING LIGHT** • Verify blinking condition for each cylinder using timing light at idle. • Do all cylinders show blinking condition?	Yes	Go to Step 12.
		No	Go to next step.

STEP	INSPECTION		ACTION
9	**INSPECT HIGH-TENSION LEADS OF NON-BLINKING CYLINDER** • Turn ignition key to OFF. • Inspect high-tension leads for improper installation, corrosion on terminal, open lead and damaged cover. • Is condition of high-tension lead okay?	Yes	Go to next step.
		No	Replace faulty high-tension lead, then go to Step 21.
10	**INSPECT POWER SUPPLY TERMINAL AT IGNITION COIL CONNECTOR** • Disconnect ignition coil connector. • Turn ignition key to ON (Engine OFF). • Measure voltage between ignition coil terminal B (harness-side) and body ground. • Is there voltage reading **B+**?	Yes	Go to next step.
		No	Check for open circuit between ignition coil connector and ignition switch. Repair or replace wiring harness, then go to Step 21.
11	**INSPECT IGNITION COIL RESISTANCE** • Inspect ignition coil resistance. (See G–16 IGNITION COIL INSPECTION.) • Is coil resistance okay?	Yes	Go to step 21.
		No	Replace ignition coil, then go to Step 21.
12	**INSPECT MAF PID** • Start engine. • Access MAF PID using WDS or equivalent. • Verify that MAF PID changes quickly according to race engine RPM. • Is MAF PID response okay?	Yes	Go to next step.
		No	Replace MAF sensor, then go to Step 21.
13	**INSPECT EXCESSIVE AIR SUCTION IN INTAKE AIR SYSTEM** • Inspect for air leakage at following: — Between MAF sensor and throttle body — Between throttle body and intake manifold • Is there any malfunction?	Yes	Repair or replace suspected part, then go to Step 21.
		No	Go to next step.
14	**INSPECT FUEL LINE PRESSURE** • Inspect fuel line pressure. (See F3–58 FUEL LINE PRESSURE INSPECTION.) • Is fuel line pressure okay?	Yes	Go to step 16.
		No	If fuel line pressure is too low, go to next step. If fuel line pressure is excessively high, replace fuel pump unit, then go to Step 21.
15	**INSPECT FUEL LINE FROM FUEL PUMP TO FUEL DELIVERY PIPE** • Visually inspect fuel line for any leakage. • Is any fuel leakage found?	Yes	Replace suspected fuel line, then go to Step 21.
		No	Inspect fuel filters for following: • Restriction or clogging in fuel filter (high-pressure side). • Foreign materials or clogging in fuel filter (low-pressure side) Perform following actions depend on the result above. • If restriction or clogging is found in fuel filter (high-pressure side), replace fuel pump unit. • If foreign materials or clogging is found inside fuel filter (low-pressure side), clean out fuel tank and filter (low-pressure side). • If all items above are okay, replace fuel pump unit. Then, go to Step 21.
16	**INSPECT ENGINE COMPRESSION** • Inspect engine compression. (See B3–31 COMPRESSION INSPECTION.) • Is it okay?	Yes	Go to next step.
		No	Implement engine overhaul for repairs, then go to Step 21.

STEP	INSPECTION		ACTION
17	**INSPECT OPERATION OF PURGE CONTROL SOLENOID VALVE** • Turn ignition key to OFF. • Connect vacuum pump to purge control solenoid valve and apply vacuum to solenoid. • Verify that solenoid holds vacuum. • Turn ignition key to ON (Engine OFF). • Access EVAPCP PID in SIMULATION TEST using WDS or equivalent. • Set duty value to **100%** for EVAPCP PID. • Apply vacuum while turning solenoid from OFF to ON and simulating EVAPCP PID with **100%** duty value. • Verify that solenoid releases vacuum when solenoid is turned to ON. • Is purge control solenoid valve operation okay?	Yes	Go to next step.
		No	Replace purge control solenoid valve, then go to Step 21.
18	**INSPECT PCV VALVE OPERATION** • Turn ignition key to OFF. • Remove PCV valve and check valve operation. (See F3–79 PCV VALVE INSPECTION.) • Is PCV valve operation okay?	Yes	Replace PCV valve, then go to Step 21.
		No	Go to next step.
19	**INSPECT OPERATION OF EGR VALVE** • Remove EGR valve. • Visually inspect for stuck open. • Is EGR valve stuck open?	Yes	Repair or replace EGR valve, then go to Step 21.
		No	Go to next step.
20	**INSPECT SEALING OF ENGINE COOLANT PASSAGE** **Warning** • **Removing radiator cap when radiator is hot is dangerous. Scalding coolant and steam may shoot out and cause serious injury.** • **When removing radiator cap, wrap thick cloth around and turn it slowly.** • Remove radiator cap. • Implement procedure to bleed air from engine coolant, then run engine at idle. • Are there any small bubbles which makes engine coolant white at filler opening? **Note** • Large bubbles are normal since they are due to remaining air being released from engine coolant passage.	Yes	Air gets in due poor sealing of head gasket or other areas between combustion chamber and engine coolant passage. Repair or replace faulty parts, then go to next step.
		No	Go to next step.
21	**VERIFY TROUBLESHOOTING OF MISFIRE DTC COMPLETED** • Make sure to reconnect all disconnected connectors. • Turn ignition key to ON (Engine OFF). • Clear DTC from memory using WDS or equivalent. • Run PCM adaptive memory procedure drive mode. (See F3–101 OBD DRIVE MODE.) • Is PENDING CODE of same DTC present?	Yes	Replace PCM, then go to next step. (See F3–81 PCM REMOVAL/INSTALLATION.)
		No	Go to next step.
22	**VERIFY AFTER REPAIR PROCEDURE** • Perform “After Repair Procedure”. (See F3–104 AFTER REPAIR PROCEDURE.) • Is there any DTC present?	Yes	Go to applicable DTC troubleshooting. (See F3–104 DTC TABLE.)
		No	Troubleshooting completed.

End Of Ste

DTC P0301, P0302, P0303, P0304

AME417001085W02

DTC P0301 **DTC P0302** **DTC P0303** **DTC P0304**	**Cylinder No.1 misfire detection** **Cylinder No.2 misfire detection** **Cylinder No.3 misfire detection** **Cylinder No.4 misfire detection**
DETECTION CONDITION	• PCM monitors CKP sensor input signal interval time. PCM calculates the change of interval time for each cylinder. If the change of interval time exceeds the preprogrammed criteria, PCM detects a misfire in the corresponding cylinder. While the engine is running, PCM counts number of misfires that occurs at **200 crankshaft revolutions** and **1,000 crankshaft revolutions** and calculates misfire ratio for each crankshaft revolution. If the ratio exceeds the preprogrammed criteria, PCM determines that a misfire, which can damage catalytic converter or affect emission performance, has occurred. **Diagnostic support note** • This is a continuous monitor (MISFIRE). • MIL illuminates if PCM detects the misfire which affects emission performance in two consecutive drive cycles or in one drive cycle while the DTC for the same malfunction has been stored in the PCM. • MIL flashes if PCM detects the misfire which can damage the catalytic converter during first drive cycle. Therefore, PENDING CODE is not available while MIL flashes. • PENDING CODE is available if PCM detects the misfire which affects emission performance during first drive cycle. • FREEZE FRAME DATA is available. • DTC is stored in the PCM memory.
POSSIBLE CAUSE	• Spark plug malfunction • High-tension lead malfunction • Fuel injector malfunction • Air suction in intake air system (between dynamic chamber and cylinder head) • Inadequate engine compression due to engine internal malfunction • Related connector or terminal malfunction • Related wiring harness malfunction

Diagnostic procedure

STEP	INSPECTION		ACTION
1	**VERIFY FREEZE FRAME DATA HAS BEEN RECORDED** • Has FREEZE FRAME DATA been recorded?	Yes	Go to next step.
		No	Record FREEZE FRAME DATA on repair order, then go to next step.
2	**VERIFY RELATED SERVICE INFORMATION AVAILABILITY** • Check for related Service Information availability. • Is any related Service Information available?	Yes	Perform repair or diagnosis according to available Service Information. • If vehicle is not repaired, go to next step.
		No	Go to next step.
3	**VERIFY RELATED PENDING CODE OR STORED DTCS** • Turn ignition key to OFF then ON (Engine OFF). • Verify related pending code or stored DTCs. • Is other DTCs present?	Yes	Go to appropriate DTC troubleshooting. (See F3–104 DTC TABLE.)
		No	Go to next step.
4	**VERIFY CURRENT INPUT SIGNAL STATUS (IGNITION KEY TO ON /IDLE)** • Access BOO, ECT, IAT, MAF, RPM, TP and VSS PIDs using WDS or equivalent. (See F3–83 PCM INSPECTION.) • Is there any signal that is far out of specification when ignition switch is ON and engine runs at idle?	Yes	Inspect suspected circuit and/or part according to inspection results. Then go to Step 12. (See F3–83 PCM INSPECTION.)
		No	Go to next step.
5	**VERIFY CURRENT INPUT SIGNAL STATUS UNDER TROUBLE CONDITION** • Inspect same PIDs as in Step 4 while simulating FREEZE FRAME DATA condition. • Is there any signal which causes drastic changes?	Yes	Inspect suspected circuit and/or part according to inspection results. Then go to Step 12. (See F3–83 PCM INSPECTION.)
		No	Go to next step.

STEP	INSPECTION		ACTION
6	**INSPECT SPARK PLUG CONDITION** • Turn ignition key to OFF. • Remove spark plug from suspected cylinder. • Check spark plug condition: — Cracks — Excess wear — Gap — Wet • Is any problem found on spark plug?	Yes	• If spark plug is wet, fuel flooding is suspected. Go to step 12. • If spark plug has cracks, excessive wear or improper gap, replace faulty spark plug. Then go to Step 12.
		No	Go to next step.
7	**VERIFY HIGH-TENSION LEAD CONDITION** • Remove high-tension lead. • Check high-tension lead condition and resistance. — Cracks — Spark shorts to cylinder head through high-tension lead insulator • Is high-tension lead okay?	Yes	Go to next step.
		No	Replace high-tension lead, then go to Step 12.
8	**INSPECT FOR AIR SUCTION AT INTAKE-AIR SYSTEM** • Inspect for air leakage at following: — Around connection of dynamic chamber and intake manifold — Around connection of intake manifold and cylinder head • Is air leakage found?	Yes	Repair or replace suspected part, then go to Step 12.
		No	Go to next step.
9	**INSPECT FUEL INJECTOR HARNESS** • Remove intake air system parts. • Disconnect fuel injector connector on suspected cylinder. • Connect noid light to fuel injector connector terminals. • Inspect dimming of light during cranking. • Does noid light illuminate?	Yes	Go to next step.
		No	Check fuel injector harnesses. Repair or replace it if necessary, then go to Step 12.
10	**INSPECT SEALING OF ENGINE COOLANT PASSAGE** **Warning** • **Removing radiator cap when radiator is hot is dangerous, Scalding coolant and steam may shoot out and cause serious injury.** • **When removing radiator cap, wrap thick cloth around and turn it slowly.** • Remove radiator cap. • Implement procedure to bleed air from engine coolant, then run engine at idle. • Are there any small bubbles which makes engine coolant white at filler opening? **Note** • Large bubbles are normal since they are due to remaining air being released from engine coolant passage.	Yes	Air gets in due to poor sealing of head gasket or other areas between combustion chamber and engine coolant passage. Repair or replace faulty parts, then go to Step 12.
		No	Go to next step.
11	**INSPECT ENGINE COMPRESSION** • Inspect engine compression. (See B3–31 COMPRESSION INSPECTION.) • Is engine compression okay?	Yes	Go to next step.
		No	Overhaul the engine, then go to next step.
12	**INSPECT FUEL INJECTOR OPERATION** • Remove fuel injector from suspected cylinder. • Swap injector with injector of another cylinder. • Start engine and run it at idle. • Is misfire DTC for cylinder which has suspected fuel injector?	Yes	Replace injector, then go to step 13.
		No	Go to next step.

STEP	INSPECTION		ACTION
13	**VERIFY TROUBLESHOOTING OF MISFIRE DTC COMPLETED** • Make sure to reconnect all disconnected connectors. • Start engine. • Clear DTC from PCM memory using WDS or equivalent. • Run PCM adaptive memory procedure drive mode. (See F3–101 OBD DRIVE MODE.) • Is PENDING CODE or stored code of same DTC present?	Yes	Replace PCM, then go to next step. (See F3–81 PCM REMOVAL/INSTALLATION.)
		No	Go to next step.
14	**VERIFY AFTER REPAIR PROCEDURE** • Perform “After Repair Procedure”. (See F3–104 AFTER REPAIR PROCEDURE.) • Is there any DTC present?	Yes	Go to applicable DTC troubleshooting. (See F3–104 DTC TABLE.)
		No	Troubleshooting completed.

End Of Sie

DTC P0327

AME417001085W03

DTC P0327	Knock sensor circuit low input
DETECTION CONDITION	• PCM monitors input signal from knock sensor when engine is running. If input voltage at PCM terminals between 2P and 2S is excessively low, PCM determines that knock sensor circuit has malfunction. **Diagnostic support note** • This is a continuous monitor (CCM). • MIL illuminates if PCM detects the above malfunction condition during first drive cycle. • PENDING CODE is available if PCM detects the above malfunction condition. • FREEZE FRAME DATA is available. • DTC is stored in the PCM memory.
POSSIBLE CAUSE	• Knock sensor malfunction • Connector or terminal malfunction • Open or short to ground circuit between knock sensor connector terminal A and PCM terminal 2S • Open or short to ground circuit between knock sensor connector terminal B and PCM terminal 2P • Short between knock sensor wires

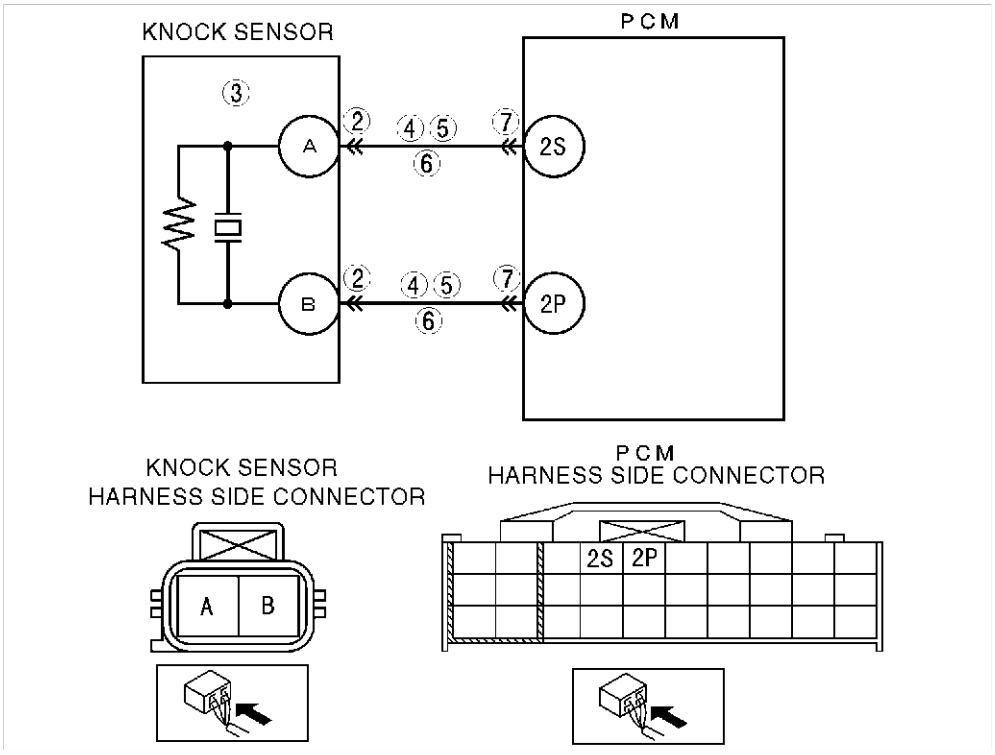

Diagnostic procedure

STEP	INSPECTION		ACTION
1	**PERFORM DTC CONFIRMATION PROCEDURE** • Perform DTC CONFIRMATION PROCEDURE. (See F3–103 DTC CONFIRMATION PROCEDURE.) • Is same DTC present?	Yes	Go to next step.
		No	Intermittent concern exists. Go to INTERMITTENT CONCERN TROUBLESHOOTING procedure. (See F3–270 INTERMITTENT CONCERN TROUBLESHOOTING.)
2	**INSPECT KNOCK SENSOR CONNECTOR TERMINAL** • Turn ignition key to OFF. • Disconnect knock sensor connector. • Inspect for poor connection at terminals A and B (damaged, pulled-out pins, corrosion, etc.). • Is there any malfunction?	Yes	Repair terminal, then go to Step 8.
		No	Go to next step.
3	**INSPECT KNOCK SENSOR** • Perform knock sensor inspection. (See F3–93 KNOCK SENSOR INSPECTION) • Is knock sensor okay?	Yes	Go to next step.
		No	Replace knock sensor, then go to next step.
4	**INSPECT KNOCK SENSOR CIRCUITS FOR OPEN** • Disconnect knock sensor connector. • Inspect continuity between the following circuits: — Knock sensor female terminal A (harness-side) and PCM terminal 2S (harness-side) — Knock sensor female terminal B (harness-side) and PCM terminal 2P (harness-side) • Is there continuity?	Yes	Go to next step.
		No	Repair or replace suspected wiring harness, then go to Step 8.
5	**INSPECT KNOCK SENSOR CIRCUITS FOR SHORT TO GROUND** • Inspect continuity between following circuits: — Knock sensor female terminal A (harness-side) and body ground — Knock sensor female terminal B (harness-side) and body ground • Is there continuity?	Yes	Repair or replace suspected wiring harness, then go to Step 8.
		No	Go to next step.
6	**INSPECT FOR SHORT CIRCUITS** • Inspect continuity between knock sensor female terminals A and B (harness-side). • Is there continuity?	Yes	Repair or replace suspected harness, then go to Step 8.
		No	Go to next step.
7	**INSPECT PCM CONNECTOR TERMINAL** • Turn ignition key to OFF. • Disconnect PCM connector. • Inspect for poor connection at terminals 2P and 2S (damaged, pulled-out pins, corrosion, etc.). • Is there any malfunction?	Yes	Repair terminal, then go to Step 8.
		No	Go to next step.
8	**VERIFY TROUBLESHOOTING OF DTC P0327 COMPLETED** • Make sure to reconnect all disconnected connectors. • Clear DTC from memory using WDS or equivalent. • Perform KOEO/KOER self-test. (See F3–103 KOEO/KOER SELF-TEST PROCEDURE.) • Is same DTC present?	Yes	Replace PCM, then go to next step. (See F3–81 PCM REMOVAL/INSTALLATION.)
		No	Go to next step.
9	**VERIFY AFTER REPAIR PROCEDURE** • Perform “After Repair Procedure”. (See F3–104 AFTER REPAIR PROCEDURE.) • Is there any DTC present?	Yes	Go to applicable DTC troubleshooting. (See F3–104 DTC TABLE.)
		No	Troubleshooting completed.

End Of Ste

DTC P0328

AME417001085W04

DTC P0328	Knock sensor circuit high input
DETECTION CONDITION	• PCM monitors input signal from knock sensor when engine is running. If input voltage at PCM terminals between 2P and 2S is excessively high, PCM determines that knock sensor circuit has malfunction. **Diagnostic support note** • This is a continuous monitor (CCM). • MIL illuminates if PCM detects the above malfunction conditions during first drive cycle. • PENDING CODE is available if PCM detects the above malfunction condition. • FREEZE FRAME DATA is available. • DTC is stored in PCM memory.
POSSIBLE CAUSE	• Knock sensor malfunction • Connector or terminal malfunction • Short to power circuit in wiring between knock sensor terminal A and PCM terminal 2S • Short to power circuit in wiring between knock sensor terminal B and PCM terminal 2P

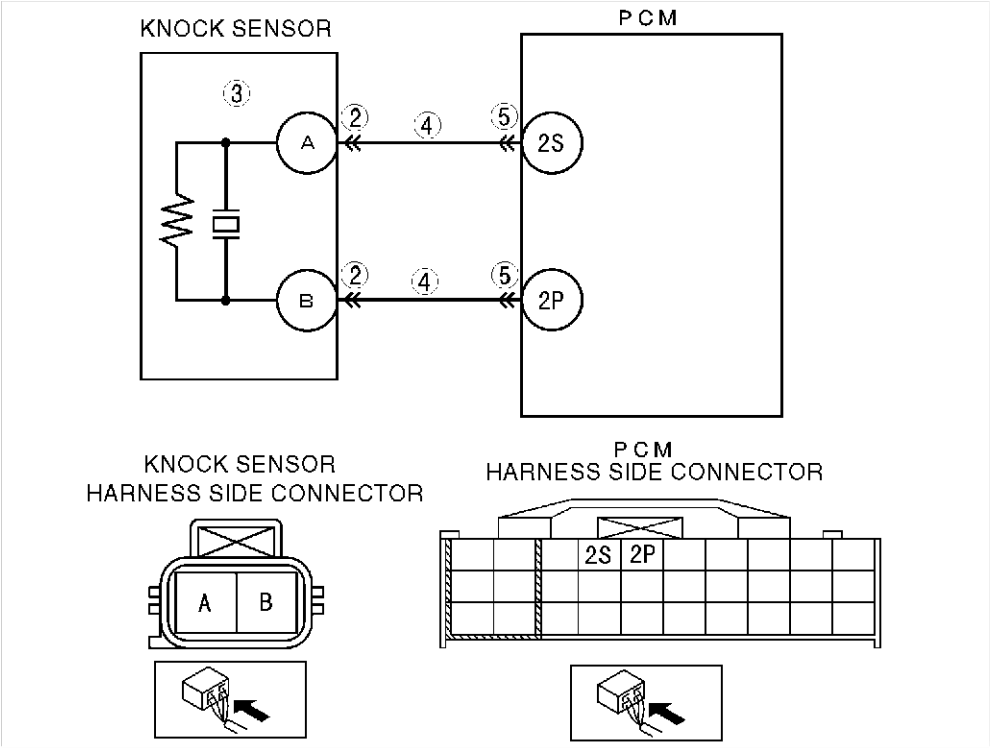

Diagnostic procedure

STEP	INSPECTION		ACTION
1	**PERFORM DTC CONFIRMATION PROCEDURE** • Perform DTC CONFIRMATION PROCEDURE. (See F3–103 DTC CONFIRMATION PROCEDURE.) • Is same DTC present?	Yes	Go to next step.
		No	Intermittent concern exists. Go to INTERMITTENT CONCERN TROUBLESHOOTING procedure. (See F3–270 INTERMITTENT CONCERN TROUBLESHOOTING.)
2	**INSPECT KNOCK SENSOR CONNECTOR TERMINAL** • Turn ignition key to OFF. • Disconnect knock sensor connector. • Inspect for poor connection at terminals A and B (damaged, pulled-out pins, corrosion, etc.). • Is there any malfunction?	Yes	Repair terminal, then go to step 6.
		No	Go to next step.
3	**INSPECT KNOCK SENSOR** • Perform knock sensor inspection. (See F3–93 KNOCK SENSOR INSPECTION.) • Is knock sensor okay?	Yes	Go to next step.
		No	Replace knock sensor, then go to step 6.
4	**INSPECT KNOCK SIGNAL CIRCUIT FOR SHORT TO POWER** • Turn ignition key to ON (Engine OFF). • Measure voltage between knock sensor terminal A (harness-side) and body GND and knock sensor terminal B (harness-side) and body GND. • Is there any voltage reading?	Yes	Repair or replace harness for short to power, then go to step 6.
		No	Go to next step.
5	**INSPECT PCM CONNECTOR** • Disconnect PCM connector. • Inspect for poor connection (damaged, pulled-out terminals, corrosion, etc.). • Is there any malfunction?	Yes	Repair or replace terminal, then go to step 6.
		No	Go to next step.
6	**VERIFY TROUBLESHOOTING OF DTC P0328 COMPLETED** • Make sure to connect all disconnected connectors. • Clear DTC from PCM memory using WDS or equivalent. • Perform KOEO/KOER self-test. (See F3–103 KOEO/KOER SELF-TEST PROCEDURE.) • Is same DTC present?	Yes	Replace PCM, then go to next step. (See F3–81 PCM REMOVAL/INSTALLATION.)
		No	Go to next step.
7	**VERIFY AFTER REPAIR PROCEDURE** • Perform “After Repair Procedure”. (See F3–104 AFTER REPAIR PROCEDURE.) • Is there any DTC present?	Yes	Go to applicable DTC troubleshooting. (See F3–104 DTC TABLE.)
		No	Troubleshooting completed.

End Of Ste

DTC P0335

AME417001085W05

DTC P0335	CKP sensor circuit malfunction
DETECTION CONDITION	• If PCM does not receive input voltage from CKP sensor for **4.2 s** while MAF is **1.95 g/s {0.25 lb/min.} or above**, PCM determines that CKP sensor circuit has malfunction. **Diagnostic support note** • This is a continuous monitor (CCM). • MIL illuminates if PCM detects the above malfunction conditions during first drive cycle. • PENDING CODE is available if PCM detects the above malfunction condition. • FREEZE FRAME DATA is available. • DTC is stored in the PCM memory.
POSSIBLE CAUSE	• CKP sensor malfunction • Connector or terminal malfunction • CKP sensor is dirty. • Short to power between CKP sensor terminal A to PCM terminal 2D • Short to power between CKP sensor terminal B to PCM terminal 2G • Short to ground between CKP sensor terminal A to PCM terminal 2D • Short to ground between CKP sensor terminal B to PCM terminal 2G • Open circuit between CKP sensor terminal A to PCM terminal 2D • Open circuit between CKP sensor terminal B to PCM terminal 2G • Both CKP sensor wires short each other. • CKP sensor pulse wheel malfunction

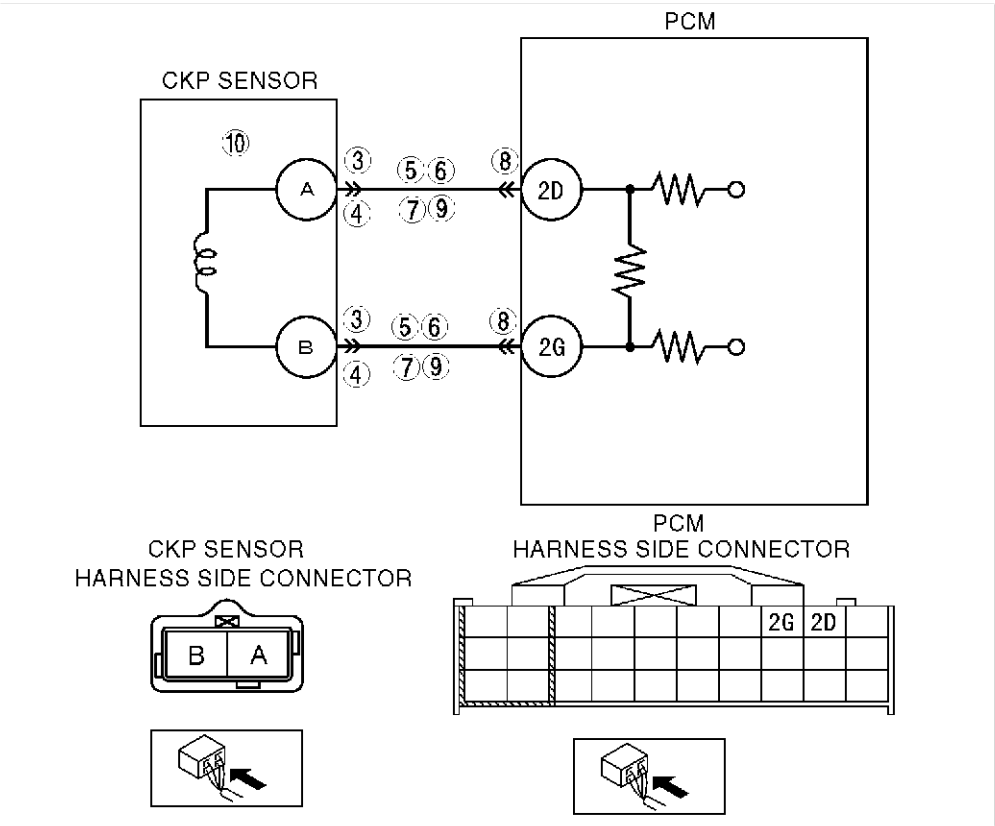

Diagnostic procedure

STEP	INSPECTION		ACTION
1	**VERIFY FREEZE FRAME DATA HAS BEEN RECORDED** • Has FREEZE FRAME DATA been recorded?	Yes	Go to next step.
		No	Record FREEZE FRAME DATA on repair order, then go to next step.
2	**VERIFY RELATED SERVICE INFORMATION AVAILABILITY** • Check for related Service Information availability. • Is any related Service Information available?	Yes	Perform repair or diagnosis according to available Service Information. • If vehicle is not repaired, go to next step.
		No	Go to next step.
3	**VERIFY CKP SENSOR VOLTAGE** • Disconnect CKP sensor connector. • Connect voltmeter between CKP sensor connector terminals A and B (sensor-side). • Inspect the voltage in AC range while cranking the engine. • Is there any voltage reading?	Yes	Go to next step.
		No	Go to step 10.

STEP	INSPECTION		ACTION
4	**INSPECT POOR CONNECTION OF CKP SENSOR CONNECTOR** • Verify that the CKP sensor connector is connected securely. • Is connector okay?	Yes	Go to next step.
		No	Reconnect the connector, then go to Step 11.
5	**INSPECT CKP CIRCUIT FOR SHORT TO POWER** • Turn ignition key to OFF • Disconnect CKP sensor connector. • Turn ignition key to ON (Engine OFF). • Measure voltage between following terminals — CKP sensor terminal A — CKP sensor terminal B • Is there any voltage reading?	Yes	Repair or replace suspected harness, then go to Step 11.
		No	Go to next step.
6	**INSPECT CKP CIRCUIT FOR SHORT TO GROUND** • Inspect continuity between following terminal and body ground: — CKP sensor connector terminal A (harness-side) — CKP sensor connector terminal B (harness-side) • Is there continuity?	Yes	Repair or replace suspected harness, then go to Step 11.
		No	Go to next step.
7	**INSPECT CKP CIRCUITS FOR SHORTS** • Inspect continuity between CKP sensor connector terminals A and B (harness-side). • Is there continuity?	Yes	Repair or replace suspected harness, then go to Step 11.
		No	Go to next step.
8	**INSPECT POOR CONNECTION OF PCM CONNECTOR** • Disconnect PCM connector. • Check for poor connection (damaged, pulled-out terminals, corrosion, etc.). • Is there malfunction?	Yes	Repair terminal, then go to Step 11.
		No	Go to next step.
9	**INSPECT CKP CIRCUIT FOR OPEN CIRCUIT** • Inspect continuity between following circuits: — CKP sensor terminal A (harness-side) and PCM terminal 2D (harness-side) — CKP sensor terminal B (harness-side) and PCM terminal 2G (harness-side) • Is there continuity?	Yes	Go to Step 11.
		No	Repair or replace suspected harness, then go to Step 11.
10	**INSPECT CKP SENSOR** • Turn ignition key to OFF. • Perform CKP sensor inspection. (See F3–91 CRANKSHAFT POSITION (CKP) SENSOR INSPECTION.) • Is CKP sensor okay?	Yes	Go to next step.
		No	Check CKP sensor pulse wheel for damage. Replace CKP sensor pulse wheel and go to Step 10.
11	**VERIFY TROUBLESHOOTING OF DTC P0335 COMPLETED** • Make sure to reconnect all disconnected connectors. • Turn ignition key to ON (Engine OFF). • Clear DTC from PCM memory using WDS or equivalent. • Start engine. • Access MAF PID using WDS or equivalent. **Note** • MAF PID should indicate **1.95 g/s {0.25 lb/min.} or above** during this test • Is same DTC present?	Yes	Replace PCM, then go to next step. (See F3–81 PCM REMOVAL/INSTALLATION.)
		No	Go to next step.
12	**VERIFY AFTER REPAIR PROCEDURE** • Perform “After Repair Procedure”. (See F3–104 AFTER REPAIR PROCEDURE.) • Is there DTC present?	Yes	Go to applicable DTC troubleshooting. (See F3–104 DTC TABLE.)
		No	Troubleshooting completed.

End Of Ste

F3

DTC P0340

AME417001085W06

DTC P0340	Camshaft position (CMP) sensor circuit malfunction
DETECTION CONDITION	• PCM monitors input voltage from CMP sensor when engine is running. If PCM does not receive input voltage from CMP sensor while PCM receives input signal from CKP sensor, PCM determines that CMP circuit has malfunction. **Diagnostic support note** • This is a continuous monitor (CCM). • MIL illuminates if PCM detects the above malfunction condition during first drive cycle. • PENDING CODE is available if PCM detects the above malfunction condition. • FREEZE FRAME DATA is available. • DTC is stored in the PCM memory.
POSSIBLE CAUSE	• CMP sensor malfunction • Connector or terminal malfunction • CMP sensor is dirty • Short to power circuit between CMP sensor terminal A and PCM terminal 2M • Short to power circuit between CMP sensor terminal B and PCM terminal 2J • Short to ground circuit between CMP sensor terminal A and PCM terminal 2M • Short to ground circuit between CMP sensor terminal B and PCM terminal 2J • Open circuit between CMP sensor terminal A and PCM terminal 2M • Open circuit between CMP sensor terminal B and PCM terminal 2J • Both CMP sensor wires short each other • CKP sensor pulse wheel malfunction

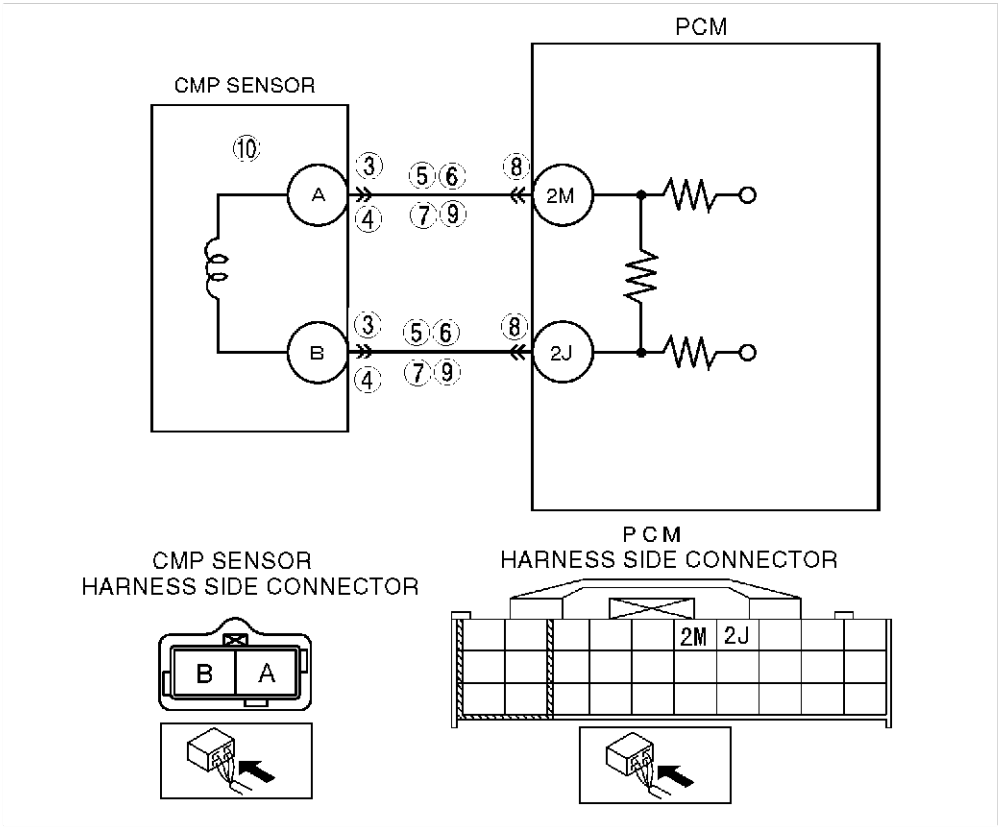

Diagnostic procedure

STEP	INSPECTION		ACTION
1	**VERIFY FREEZE FRAME DATA HAS BEEN RECORDED** • Has FREEZE FRAME DATA been recorded?	Yes	Go to next step.
		No	Record FREEZE FRAME DATA on repair order, then go to next step.
2	**VERIFY RELATED SERVICE INFORMATION AVAILABILITY** • Check for related Service Information availability. • Is any related Service Information available?	Yes	Perform repair or diagnosis according to available Service Information. • If vehicle is not repaired, go to next step.
		No	Go to next step.

STEP	INSPECTION		ACTION
3	**VERIFY CMP SENSOR VOLTAGE** • Disconnect CMP sensor connector. • Connect voltmeter between CMP sensor connector terminals A and B (sensor-side). • Check the voltage in AC range while cranking the engine. • Is there any voltage reading?	Yes	Go to next step.
		No	Go to step 10.
4	**INSPECT POOR CONNECTION OF CMP SENSOR CONNECTOR** • Verify that the CMP sensor connector is connected securely. • Is connector okay?	Yes	Go to next step.
		No	Reconnect the connector, then go to Step 11.
5	**INSPECT CMP CIRCUIT FOR SHORT TO POWER** • Turn ignition key to OFF. • Disconnect CMP sensor connector. • Turn ignition key to ON (Engine OFF) • Measure voltage at CMP sensor terminals A and B • Is there any voltage reading?	Yes	Repair or replace suspected harness, then go to Step 11.
		No	Go to next step.
6	**INSPECT CMP CIRCUIT FOR SHORT TO GROUND** • Inspect continuity between following terminal and body ground: — CMP sensor connector terminal A (harness-side) — CMP sensor connector terminal B (harness-side) • Is there continuity?	Yes	Repair or replace suspected harness, then go to Step 11.
		No	Go to next step.
7	**INSPECT CMP CIRCUITS FOR SHORTS** • Inspect continuity between CMP sensor connector terminals A and B (harness-side). • Is there continuity?	Yes	Repair or replace suspected harness, then go to Step 11.
		No	Go to next step.
8	**INSPECT POOR CONNECTION OF PCM CONNECTOR** • Disconnect PCM connector. • Inspect for poor connection (damaged, pulled-out terminals, corrosion, etc.). • Is there malfunction?	Yes	Repair terminal, then go to Step 11.
		No	Go to next step.
9	**INSPECT CMP CIRCUIT FOR OPEN CIRCUIT** • Inspect continuity between following circuits: — CMP sensor terminal A (harness-side) and PCM terminal 2M (harness-side) — CMP sensor terminal B (harness-side) and PCM terminal 2J (harness-side) • Is there continuity?	Yes	Go to Step 11.
		No	Repair or replace suspected harness, then go to Step 11.
10	**INSPECT CMP SENSOR** • Turn ignition key to OFF. • Perform CMP sensor inspection. (See F3–92 CAMSHAFT POSITION (CMP) SENSOR INSPECTION.) • Is CMP sensor okay?	Yes	Go to next step.
		No	Check CMP sensor pulse wheel for damage. Replace CMP sensor pulse wheel and go to step 10.
11	**VERIFY TROUBLESHOOTING OF DTC P0335 COMPLETED** • Make sure to reconnect all disconnected connectors. • Turn ignition key to ON (Engine OFF). • Clear DTC from PCM memory using WDS or equivalent. • Start engine. • Access MAF PID using WDS or equivalent. **Note** • MAF PID should indicate **1.95 g/s {0.25 lb/min.} or above** during this test • Is same DTC present?	Yes	Replace PCM, then go to next step. (See F3–81 PCM REMOVAL/INSTALLATION.)
		No	Go to next step.
12	**VERIFY AFTER REPAIR PROCEDURE** • Perform “After Repair Procedure”. (See F3–104 AFTER REPAIR PROCEDURE.) • Is there any DTC present?	Yes	Go to applicable DTC troubleshooting. (See F3–104 DTC TABLE.)
		No	Troubleshooting completed.

End Of Sta

DTC P0403

AME417001086W01

DTC P0403	EGR valve (stepper motor) circuit malfunction
DETECTION CONDITION	• PCM monitors input voltage from EGR valve. If voltage at PCM terminals 4E, 4H, 4K and/or 4N remain low or high, PCM determines that EGR valve circuit has malfunction. **Diagnostic support note** • This is a continuous monitor (CCM). • MIL illuminates if PCM detects the above malfunction conditions in two consecutive drive cycles or in one drive cycle while the DTC for the same malfunction has been stored in the PCM. • PENDING CODE is available if PCM detects the above malfunction condition during first drive cycle. • FREEZE FRAME DATA is available. • DTC is stored in the PCM memory.
POSSIBLE CAUSE	• EGR valve malfunction • Connector or terminal malfunction • Short to power circuit in wiring between EGR valve terminal E and PCM terminal 4E • Short to power circuit in wiring between EGR valve terminal A and PCM terminal 4H • Short to power circuit in wiring between EGR valve terminal B and PCM terminal 4K • Short to power circuit in wiring between EGR valve terminal F and PCM terminal 4N • Short to ground circuit in wiring between EGR valve terminal E and PCM terminal 4E • Short to ground circuit in wiring between EGR valve terminal A and PCM terminal 4H • Short to ground circuit in wiring between EGR valve terminal B and PCM terminal 4K • Short to ground circuit in wiring between EGR valve terminal F and PCM terminal 4N • Open circuit in wiring between EGR valve terminal E and PCM terminal 4E • Open circuit in wiring between EGR valve terminal A and PCM terminal 4H • Open circuit in wiring between EGR valve terminal B and PCM terminal 4K • Open circuit in wiring between EGR valve terminal F and PCM terminal 4N • Open circuit in wiring between main relay and EGR valve terminal C • Open circuit in wiring between main relay and EGR valve terminal D • PCM malfunction

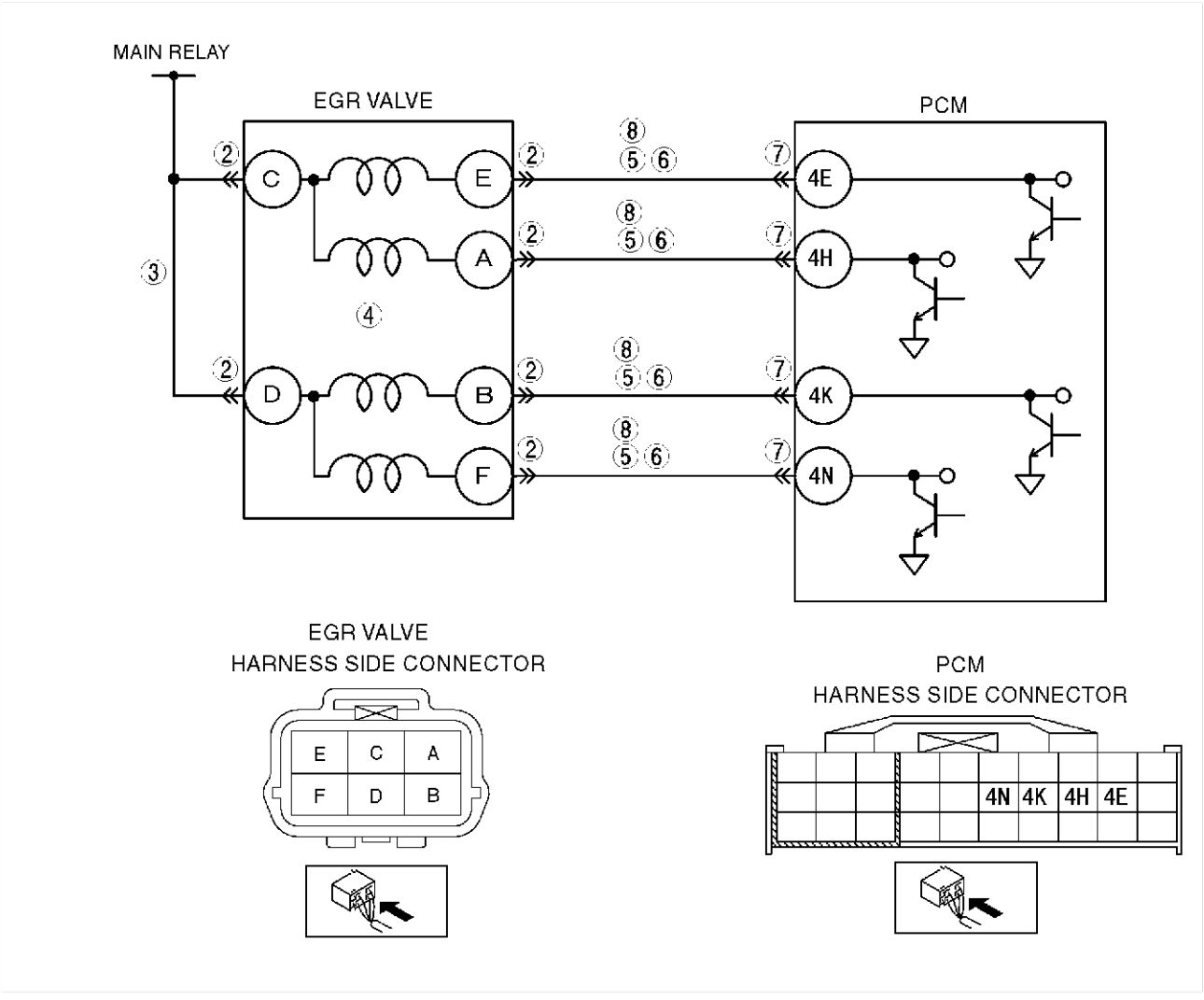

Diagnostic procedure

STEP	INSPECTION		ACTION
1	**PERFORM DTC CONFIRMATION PROCEDURE** • Perform DTC CONFIRMATION PROCEDURE. (See F3–103 DTC CONFIRMATION PROCEDURE.) • Is same DTC present?	Yes	Go to next step.
		No	Intermittent concern exists. Go to INTERMITTENT CONCERN TROUBLESHOOTING procedure. (See F3–270 INTERMITTENT CONCERN TROUBLESHOOTING.)
2	**INSPECT POOR CONNECTION OF EGR VALVE** • Turn ignition key to OFF. • Disconnect EGR valve connector. • Inspect for poor connection (damaged, pulled-out terminals, corrosion, etc.). • Is there any malfunction?	Yes	Repair or replace terminals and/or connector, then go to Step 9.
		No	Go to next step.
3	**INSPECT POWER CIRCUIT FOR OPEN CIRCUIT** • Turn ignition key to ON (Engine OFF). • Measure following EGR valve power circuit terminal voltage. — EGR valve terminal C and body ground — EGR valve terminal D and body ground • Is voltage **B+**?	Yes	Go to next step.
		No	Repair or replace harness for open circuit then go to Step 9.
4	**INSPECT EGR VALVE** • Perform EGR valve inspection. (See F3–78 EGR VALVE INSPECTION.) • Is EGR valve okay?	Yes	Go to next step.
		No	Replace EGR valve, then go to Step 9.
5	**INSPECT FOR CONTROL CIRCUIT FOR SHORT TO GROUND** • Turn ignition key to OFF. • Inspect continuity following EGR control circuit. — EGR valve terminal E and body ground — EGR valve terminal A and body ground — EGR valve terminal B and body ground — EGR valve terminal F and body ground • Is there continuity?	Yes	Repair or replace harness for short to ground, then go to Step 9.
		No	Go to next step.
6	**INSPECT FOR CONTROL CIRCUIT FOR SHORT TO POWER** • Turn ignition switch key to ON (Engine OFF). • Measure voltage following EGR valve control circuit. — EGR valve terminal E and body ground — EGR valve terminal A and body ground — EGR valve terminal B and body ground — EGR valve terminal F and body ground • Is voltage **B+**?	Yes	Repair or replace harness for short to power, then go to Step 9.
		No	Go to next step.
7	**INSPECT POOR CONNECTION OF PCM** • Turn ignition key to OFF. • Disconnect PCM connector. • Check for poor connection (damaged, pulled-out terminals, corrosion, etc.). • Is there any malfunction?	Yes	Repair or replace terminals and/or connector, then go to Step 9.
		No	Go to next step.
8	**INSPECT CONTROL CIRCUIT FOR OPEN CIRCUIT** • Remove PCM with PCM connector connected. • Inspect continuity following EGR control circuit. — EGR valve terminal E and PCM terminal 4E — EGR valve terminal A and PCM terminal 4H — EGR valve terminal B and PCM terminal 4K — EGR valve terminal F and PCM terminal 4N • Is there continuity?	Yes	Go to next step.
		No	Repair or replace harness for open circuit then go to next step.
9	**VERIFY TROUBLESHOOTING OF DTC P0403 COMPLETED** • Make sure to reconnect all disconnected connectors. • Clear DTC from PCM memory using WDS or equivalent. • Perform KOEO/KOER self-test. (See F3–103 KOEO/KOER SELF-TEST PROCEDURE.) • Is same DTC present?	Yes	Replace PCM, then go to next step. (See F3–81 PCM REMOVAL/INSTALLATION.)
		No	Go to next step.
10	**VERIFY AFTER REPAIR PROCEDURE** • Perform “After Repair Procedure”. (See F3–104 AFTER REPAIR PROCEDURE.) • Is there any DTC present?	Yes	Go to applicable DTC troubleshooting. (See F3–104 DTC TABLE.)
		No	Troubleshooting completed.

DTC P0420

AME417001086W02

DTC P0420	Catalyst system efficiency below threshold
DETECTION CONDITION	• PCM compares number of front HO2S and rear HO2S inversions for a predetermined time. PCM monitors number of inversions rear side performs while front side inverts for a specified number of times when the following monitoring conditions are met. PCM detects inversion ratio. If inversion ratio is below threshold, PCM determins that catalyst system has deteriorated. **MONITORING CONDITION** — Engine speed **1,500—3,000 rpm** — Calculated load **15—48%**(*1) *1: Maximum calculated load value varies depending on engine speed. **Diagnostic support note** • This is a intermittent monitor. (CATALYST) • MIL illuminates if PCM detects the above malfunction conditions in two consecutive drive cycles or in one drive cycle while the DTC for the same malfunction has been stored in the PCM. • DIAGNOSTIC MONITORING TEST RESULTS and PENDING CODE are stored if PCM detects the above malfunction condition during first drive cycle. • FREEZE FRAME DATA is available. • DTC is stored in the PCM memory.
POSSIBLE CAUSE	• TWC deterioration or malfunction • Exhaust gas leakage • Loose front HO2S • Loose rear HO2S • Front HO2S malfunction

Diagnostic procedure

STEP	INSPECTION		ACTION
1	**VERIFY FREEZE FRAME DATA HAS BEEN RECORDED** • Has FREEZE FRAME DATA been recorded?	Yes	Go to next step.
		No	Record FREEZE FRAME DATA on repair order, then go to next step.
2	**VERIFY RELATED SERVICE INFORMATION AVAILABILITY** • Check for related Service Information availability. • Is any related Service Information available?	Yes	Perform repair or diagnosis according to available Service Information. • If vehicle is not repaired, go to next step.
		No	Go to next step.
3	**VERIFY RELATED PENDING CODE OR STORED DTCS** • Turn ignition key to OFF then ON (Engine OFF). • Verify related pending code or stored DTCs. • Are other DTCs present?	Yes	Go to appropriate DTC troubleshooting.
		No	Go to next step.

STEP	INSPECTION		ACTION
4	**INSPECT GAS LEAKAGE OF EXHAUST SYSTEM** • Visually inspect exhaust gas leakage in exhaust system. • Is there any gas leakage?	Yes	Repair or replace faulty exhaust parts, then go to Step 7.
		No	Go to next step.
5	**INSPECT INSTALLATION OF FRONT AND REAR OXYGEN SENSORS** • Inspect for looseness of front and rear HO2S. • Are they secure?	Yes	Go to next step.
		No	Retighten sensor, then go to Step 7.
6	**INSPECT TWC** • Clear DTC using WDS or equivalent generic OBD function. • Cycle ignition key to OFF then back to ON. • Inspect TWC. (See F3–79 THREE-WAY CATALYTIC CONVERTER (TWC) INSPECTION.) • Is TWC okay?	Yes	Replace suspected oxygen sensor, then go to next step.
		No	Replace TWC, then go to next step.
7	**VERIFY TROUBLESHOOTING OF DTC P0420 COMPLETED** • Make sure to reconnect all disconnected connectors. • Turn ignition key to ON (Engine OFF). • Clear DTC from memory using WDS or equivalent. • Run OBD DRIVE MODE. (See F3–101 OBD DRIVE MODE.) • Is PENDING CODE of same DTC present?	Yes	Replace PCM, then go to next step. (See F3–81 PCM REMOVAL/INSTALLATION.)
		No	Go to next step.
8	**VERIFY AFTER REPAIR PROCEDURE** • Perform “After Repair Procedure”. (See F3–104 AFTER REPAIR PROCEDURE.) • Is there any DTC present?	Yes	Go to applicable DTC troubleshooting. (See F3–104 DTC TABLE.)
		No	Troubleshooting completed.

End Of Sie

DTC P0443

AME417001086W03

DTC P0443	Evaporative emission control system purge control valve circuit malfunction
DETECTION CONDITION	• PCM monitors input voltages from purge solenoid valve. If voltage at PCM terminal 4U remains low or high, PCM determines that purge solenoid valve circuit has malfunction. **Diagnostic support note** • This is a continuous monitor (CCM). • MIL illuminates if PCM detects the above malfunction condition in two consecutive drive cycles or in one drive cycle while the DTC for the same malfunction has been stored in the PCM. • PENDING CODE is available if PCM detects the above malfunction condition. • FREEZE FRAME DATA is available. • DTC is stored in the PCM memory.
POSSIBLE CAUSE	• Purge solenoid valve malfunction • Connector or terminal malfunction • Short to ground in wiring between purge solenoid valve terminal B and PCM terminal 4U • Open circuit in wiring between main relay and purge solenoid valve terminal A • Open circuit in wiring between purge solenoid valve terminal B and PCM terminal 4U • Short to power circuit between purge solenoid valve terminal B and PCM terminal 4U • PCM malfunction

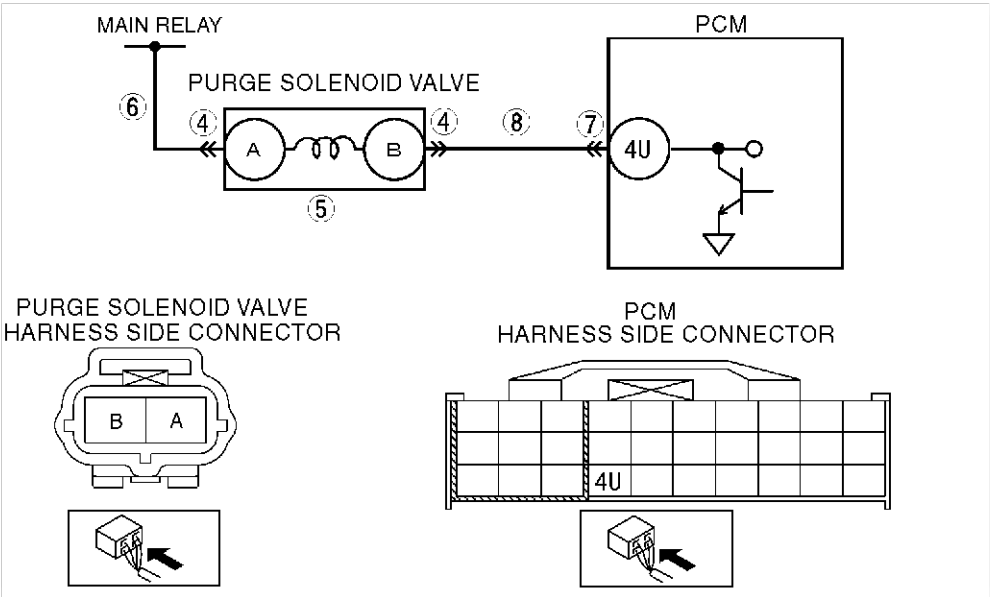

Diagnostic procedure

STEP	INSPECTION		ACTION
1	**PERFORM DTC CONFIRMATION PROCEDURE** • Perform DTC CONFIRMATION PROCEDURE. (See F3–103 DTC CONFIRMATION PROCEDURE.) • Is same DTC present?	Yes	Go to next step.
		No	Intermittent concern exists. Go to INTERMITTENT CONCERN TROUBLESHOOTING procedure. (See F3–270 INTERMITTENT CONCERN TROUBLESHOOTING.)
2	**CLASSIFY OPEN CIRCUIT OR SHORT TO GROUND MALFUNCTION** • Disconnect purge solenoid valve tube that is connected to intake manifold. • Connect vacuum pump to purge solenoid valve. • Pump vacuum pump several times and stop. • Wait **a few seconds**. • Is vacuum maintained?	Yes	Go to Step 4.
		No	Go to next step.

STEP	INSPECTION		ACTION
3	**INSPECT PASSAGE CONTROL OF PURGE SOLENOID VALVE** • Turn ignition key to OFF. • Disconnect purge solenoid valve connector. • Pump vacuum pump several times and wait **a few seconds**. • Is vacuum maintained?	Yes	Repair or replace harness for short to ground, then go to Step 9.
		No	Replace purge solenoid valve, then go to Step 9.
4	**INSPECT PURGE SOLENOID VALVE CONNECTOR FOR POOR CONNECTION** • Turn ignition key to OFF. • Inspect for poor connection (damaged/pulled-out pins, corrosion, etc.). • Is there malfunction?	Yes	Repair or replace terminal, then go to Step 9.
		No	Go to next step.
5	**INSPECT PURGE SOLENOID VALVE** • Perform purge solenoid valve inspection. (See F3–76 PURGE SOLENOID VALVE INSPECTION.) • Is purge solenoid valve okay?	Yes	Go to next step.
		No	Replace purge solenoid valve, then go to Step 9.
6	**INSPECT PURGE SOLENOID VALVE POWER SUPPLY CIRCUIT FOR OPEN CIRCUIT** • Turn ignition key to ON (Engine OFF). • Measure voltage between purge solenoid valve connector terminal A and body ground. • Is voltage **B+**?	Yes	Go to next step.
		No	Repair or replace harness for open, then go to Step 9.
7	**INSPECT PCM CONNECTOR FOR POOR CONNECTION** • Turn ignition key to OFF. • Disconnect PCM connector. • Inspect for poor connection (damaged/pulled-out pins, corrosion, etc.). • Is there any malfunction?	Yes	Repair or replace terminal, then go to Step 9.
		No	Go to next step.
8	**INSPECT PURGE SOLENOID VALVE CONTROL CIRCUIT** • Turn ignition key to ON (Engine OFF). • Measure voltage between purge solenoid valve terminal B (harness-side) and body ground. • Is voltage **B+**?	Yes	Repair or replace harness for short to power, then go to next step.
		No	Inspect for continuity between purge solenoid valve terminal B (harness-side) and PCM terminal 4U (harness-side). • If there is continuity, go to next step. • If there is no continuity, repair or replace harness for open, then go to next step.
9	**VERIFY TROUBLESHOOTING OF DTC P0443 COMPLETED** • Make sure to reconnect all disconnected connectors. • Perform KOEO/KOER self-test. (See F3–103 KOEO/KOER SELF-TEST PROCEDURE.) • Is same DTC present?	Yes	Replace PCM, then go to next step. (See F3–81 PCM REMOVAL/INSTALLATION.)
		No	Go to next step.
10	**VERIFY AFTER REPAIR PROCEDURE** • Perform “After Repair Procedure”. (See F3–104 AFTER REPAIR PROCEDURE.) • Is there any DTC present?	Yes	Go to applicable DTC troubleshooting. (See F3–104 DTC TABLE.)
		No	Troubleshooting completed.

DTC P0480

AME417001086W04

DTC P0480	Fan control circuit malfunction
DETECTION CONDITION	• PCM monitors the fan control signal at PCM terminal 1U. If PCM sends signal to fan control module but voltage at terminal 1U does not change, PCM determines that fan control circuit has malfunction.
POSSIBLE CAUSE	• Fan control module malfunction • Connector or terminal malfunction • Open circuit in wiring between fan control module terminal 1B and PCM terminal 1U • Short to power circuit between fan control module terminal 1B and PCM terminal 1U • Short to ground in wiring between fan control module terminal 1B and PCM terminal 1U • PCM malfunction

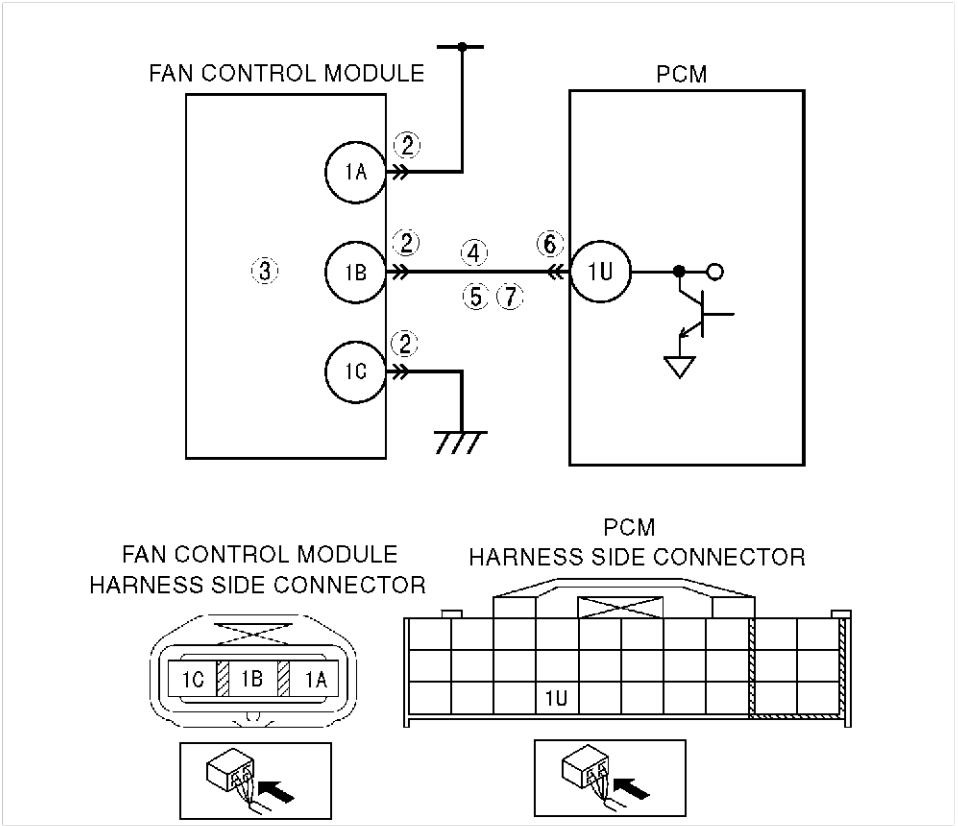

Diagnostic procedure

STEP	INSPECTION		ACTION
1	**PERFORM DTC CONFIRMATION PROCEDURE** • Perform DTC CONFIRMATION PROCEDURE. (See F3–103 DTC CONFIRMATION PROCEDURE.) • Is same DTC present?	Yes	Go to next step.
		No	Intermittent concern exists. Go to INTERMITTENT CONCERN TROUBLESHOOTING procedure. (See F3–270 INTERMITTENT CONCERN TROUBLESHOOTING.)

STEP	INSPECTION		ACTION
2	**INSPECT FAN CONTROL MODULE CONNECTOR FOR POOR CONNECTION** • Turn ignition key to OFF. • Disconnect fan control module connector. • Check for poor connection (damaged/pulled-out pins, corrosion, etc.). • Is there any malfunction?	Yes	Repair or replace terminal, then go to Step 8.
		No	Go to next step.
3	**INSPECT FAN CONTROL MODULE** • Perform fan control module inspection. (See E–22 FAN CONTROL MODULE INSPECTION.) • Is fan control module okay?	Yes	Go to next step.
		No	Replace fan control module, then go to Step 8.
4	**INSPECT FAN CONTROL MODULE SIGNAL CIRCUIT FOR SHORT TO POWER** • Measure voltage between fan control module connector terminal 1B and body ground. • Is voltage **B+**?	Yes	Repair or replace harness for short to power, then go to Step 8.
		No	Go to next step.
5	**INSPECT FAN CONTROL MODULE SIGNAL CIRCUIT FOR SHORT TO GROUND** • Inspect continuity between fan control module terminal 1B and body ground. • Is there continuity?	Yes	Repair or replace harness for short to ground, then go to Step 8.
		No	Go to next step.
6	**INSPECT PCM CONNECTOR FOR POOR CONNECTION** • Inspect for poor connection (damaged/pulled-out pins, corrosion, etc.). • Is there any malfunction?	Yes	Repair or replace terminal and/or connector, then go to Step 8.
		No	Go to next step.
7	**INSPECT FAN CONTROL MODULE SIGNAL CIRCUIT FOR OPEN CIRCUIT** • Inspect continuity between fan control module terminal 1B and PCM terminal 1U. • Is there continuity?	Yes	Go to next step.
		No	Repair or replace harness for open, then go to next step.
8	**VERIFY TROUBLESHOOTING OF DTC P0480 COMPLETED** • Make sure to reconnect all disconnected connectors. • Clear DTC from PCM memory using WDS or equivalent. • Perform KOEO/KOER self-test. (See F3–103 KOEO/KOER SELF-TEST PROCEDURE.) • Is same DTC present?	Yes	Replace PCM, then go to next step. (See F3–81 PCM REMOVAL/INSTALLATION.)
		No	Go to next step.
9	**VERIFY AFTER REPAIR PROCEDURE** • Perform “After Repair Procedure”. (See F3–104 AFTER REPAIR PROCEDURE.) • Is there any DTC present?	Yes	Go to applicable DTC troubleshooting. (See F3–104 DTC TABLE.)
		No	Troubleshooting completed.

End Of Ste

DTC P0500

AME417001087W01

DTC P0500	Vehicle speed sensor (VSS) circuit malfunction
DETECTION CONDITION	• Vehicle speed signal is not input after following conditions are met: — Gear is in position other than neutral position — Load is above **40%** — Engine speed is **2,000 rpm or above** **Diagnostic support note:** • This is a continuous monitor (CCM). • MIL illuminates if PCM detects the above malfunction conditions in two consecutive drive cycles or in one drive cycle while the DTC for the same malfunction has been stored in the PCM. • PENDING CODE is available if PCM detects the above malfunction condition during first drive cycle. • FREEZE FRAME DATA is available. • DTC is stored in PCM memory.
POSSIBLE CAUSE	• PCM malfunction • Connector or terminal malfunction • Instrument cluster malfunction • ABS, ABS/TCS, DSC HU/CM malfunction • Open circuit between PCM terminal 2L and instrument cluster terminal 2O • Short to ground between PCM terminal 2L and instrument cluster terminal 2O

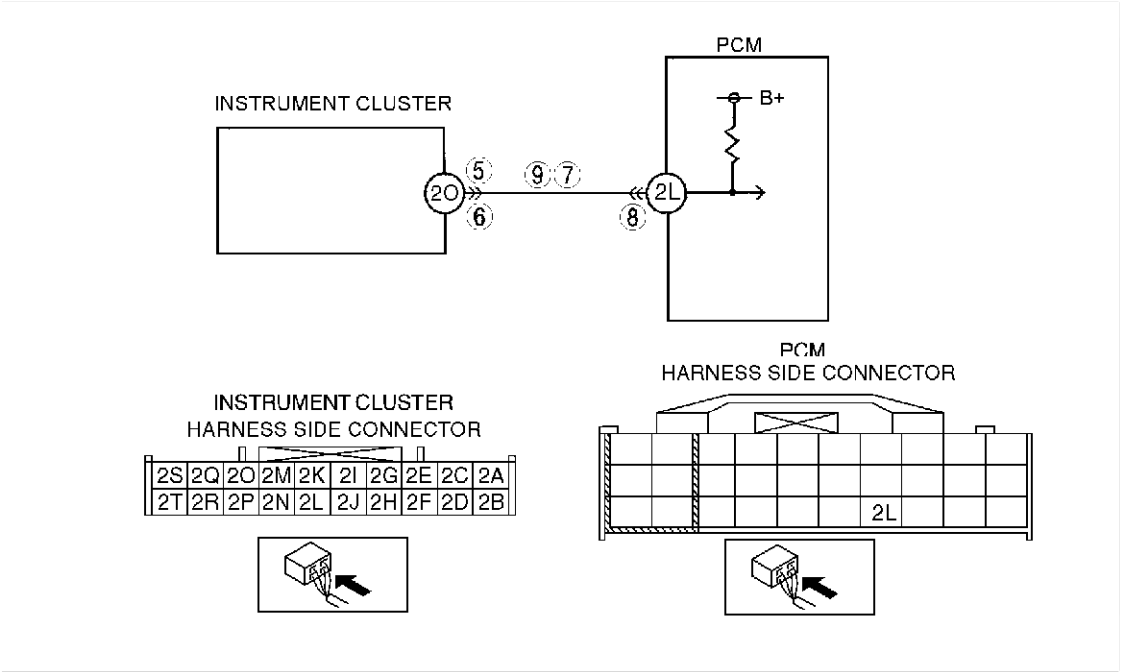

Diagnostic procedure

STEP	INSPECTION		ACTION
1	**VERIFY FREEZE FRAME DATA HAS BEEN RECORDED** • Has FREEZE FRAME PID DATA been recorded?	Yes	Go to next step.
		No	Record FREEZE FRAME PID DATA on repair order, then go to next step.
2	**VERIFY RELATED SERVICE INFORMATION AVAILABILITY** • Check for related Service Information availability. • Is any related Service Information available?	Yes	Perform repair or diagnosis according to available Service Information. • If vehicle is not repaired, go to next step.
		No	Go to next step.
3	**VERIFY CURRENT INPUT SIGNAL STATUS-IS CONCERN INTERMITTENT OR CONSTANT** • Connect WDS or equivalent to DLC-2. • Start engine. • Access VSS PID using WDS or equivalent. — Vehicle speed **20 km/h {12.4 mph}: 20km/h {12.4 mph}** — Vehicle speed **40 km/h {24.8 mph}: 40km/h {24.8 mph}** • Are PID readings within specification?	Yes	Go to intermittent concern troubleshooting procedure. (See F3–270 INTERMITTENT CONCERN TROUBLESHOOTING.)
		No	Go to next step.

STEP	INSPECTION		ACTION
4	**CHECK INPUT/OUTPUT CHECK MODE** • Turn ignition key to ON (engine OFF). • Is instrument cluster DTCs 10 or 12 detected? (See T–37 INSTRUMENT CLUSTER INPUT/ OUTPUT CHECK MODE.)	Yes	DTC 10 and/or 12 displayed: Inspect instrument cluster. (See T–37 INSTRUMENT CLUSTER INPUT/OUTPUT CHECK MODE.)
		No	Go to next step.
5	**INSPECT INSTRUMENT CLUSTER CONNECTOR FOR POOR CONNECTION** • Turn ignition key to OFF. • Disconnect instrument cluster connector. • Inspect for poor connections (damaged/pulled-out terminals, corrosion, etc.). • Are terminals okay?	Yes	Go to next step.
		No	Repair or replace terminals, then go to Step 10.
6	**INSPECT VOLTAGE** • Connect PCM connector. • Turn ignition key to ON (engine OFF). • Measure voltage at instrument cluster terminal 2O (harness-side). • Is there **5 V** at instrument cluster terminal 2O (harness-side)?	Yes	Replace instrument cluster, then go to Step 10. (See Section T.)
		No	Go to next step.
7	**INSPECT INSTRUMENT CLUSTER CIRCUIT FOR SHORT TO GROUND** • Turn ignition key to OFF • Inspect for continuity between instrument cluster terminal 2O (harness-side) and body ground. • Is there continuity?	Yes	Repair or replace harness, then go to Step 10.
		No	Go to next step.
8	**INSPECT PCM CONNECTOR FOR POOR CONNECTION** • Turn ignition key to OFF. • Disconnect PCM connector. • Inspect for poor connection (damaged/pulled-out terminals, corrosion, etc.). • Are terminals okay?	Yes	Go to next step.
		No	Repair or replace pin or connector, then go to Step 10.
9	**INSPECT INSTRUMENT CLUSTER CIRCUIT FOR OPEN** • Turn ignition key to OFF. • Turn ignition key to ON (engine OFF). • Inspect for continuity between instrument cluster terminal 2O (harness-side) and PCM terminal 2L (harness-side). • Is there continuity?	Yes	Replace instrument cluster then go to next step.
		No	Repair or replace harness, then go to next step.
10	**VERIFY TROUBLESHOOTING OF DTC P0500 COMPLETED** • Make sure to reconnect all disconnected connectors. • Clear DTC from memory using WDS or equivalent. • Warm up engine. • Drive vehicle under following conditions for **16 s**. — Engine speed: **2,000 rpm or above** — Gear: Gear is in position other than neutral — Load: **40% or above** • Is PENDING CODE of same DTC present?	Yes	Replace PCM, then go to next step. (See F3–81 PCM REMOVAL/INSTALLATION.)
		No	Go to next step.
11	**VERIFY AFTER REPAIR PROCEDURE** • Perform “After Repair Procedure”. (See F3–104 AFTER REPAIR PROCEDURE.) • Is there any DTC present?	Yes	Go to applicable DTC troubleshooting. (See F3–104 DTC TABLE.)
		No	Troubleshooting completed.

End Of Sta

DTC P0505

AME417001087W02

DTC P0505	IAC valve circuit malfunction
DETECTION CONDITION	• PCM cannot control idle speed toward target idle speed during KOER self-test.
POSSIBLE CAUSE	• IAC valve circuit malfunction • Air cleaner element clogged • Air intake passage clogged • A/C relay control circuit malfunction • Generator control circuit malfunction • Low engine compression (Over capacity of blow-by gas) • PCM malfunction

Diagnostic procedure

STEP	INSPECTION		ACTION
1	**VERIFY RELATED SERVICE INFORMATION AVAILABILITY** • Check for related Service Information availability. • Is any related Service Information available?	Yes	Perform repair or diagnosis according to available Service Information. • If vehicle is not repaired, go to next step.
		No	Go to next step.
2	**VERIFY RELATED PENDING OR STORED DTCS** • Turn ignition switch to OFF, then ON. (Engine OFF) • Verify pending code or stored DTCs using WDS or equivalent. • Is DTC P0511,P2502, P2503 or P2504 present?	Yes	Perform applicable DTC troubleshooting. (See F3–186 DTC P0511.) (See F3–218 DTC P2502.) (See F3–220 DTC P2503.) (See F3–222 DTC P2504.)
		No	Go to next step.
3	**INSPECT IAC VALVE MALFUNCTION** • Start engine. • Disconnect IAC valve connector. • Is engine speed decreased?.	Yes	Go to next step.
		No	Repair IAC valve, then go to Step 9.
4	**INSPECT A/C MAGNETIC CLUTCH OPERATION** **Note** • The following test should be performed for A/C. Go to next step for vehicles without A/C. • Turn blower motor switch to off. • Is magnetic clutch still on?	Yes	Go to "A/C IS ALWAYS ON OR A/C COMPRESSOR RUNS CONTINUOUSLY." of ENGINE SYMPTOM TROUBLESHOOTING then go to step 9. (See F3–264 NO.24 A/C IS ALWAYS ON OR A/C COMPRESSOR RUNS CONTINUOUSLY.)
		No	Go to next step.
5	**INSPECT GENERATOR CONTROL CIRCUIT MALFUNCTION** • Apply electrical load. • Does engine speed increase?	Yes	Go to next step.
		No	Repair short to power circuit in generator control circuit, then go to Step 9.
6	**INSPECT AIR CLEANER ELEMENT** • Remove air cleaner element with engine running. • Does engine speed increase?	Yes	Clean or replace throttle body passage, then go to Step 9.
		No	Go to next step.
7	**INSPECT THROTTLE BODY PASSAGE** • Is throttle body clogged?	Yes	Clean or replace throttle body passage, then go to Step 9.
		No	Go to next step.
8	**INSPECT ENGINE COMPRESSION** • Inspect engine compression. (See B3–31 COMPRESSION INSPECTION.) • Is compression okay?	Yes	Go to next step.
		No	Overhaul engine, then go to next step.
9	**VERIFY TROUBLESHOOTING OF DTC P0505 COMPLETED** • Make sure to reconnect all disconnected connectors. • Clear DTC using WDS or equivalent. • Perform KOER self-test. (See F3–103 KOEO/KOER SELF-TEST PROCEDURE.) • Is same DTC present?	Yes	Replace PCM, then go to next step. (See F3–81 PCM REMOVAL/INSTALLATION.)
		No	Go to next step.
10	**VERIFY AFTER REPAIR PROCEDURE** • Perform "After Repair Procedure". (See F3–104 AFTER REPAIR PROCEDURE.) • Is there any DTC present?	Yes	Go to applicable DTC troubleshooting. (See F3–104 DTC TABLE.)
		No	Troubleshooting completed.

End Of Sie

DTC P0506

AME417001087W03

DTC P0506	Idle control system RPM lower than expected
DETECTION CONDITION	• Actual idle speed is lower than expected by **100 rpm** for **14 s**, when brake pedal is depressed (brake switch is on) and steering wheel is held straight ahead (power steering pressure switch is off). **Note** • If atmospheric pressure is **less than 72.3 kPa {542 mmHg, 21.3 inHg}** or intake air temperature is **below -10 °C {14 °F}**, PCM cancels diagnosis of P0506. **Diagnostic support note** • This is a continuous monitor (CCM). • MIL illuminates if PCM detects the above malfunction conditions in two consecutive drive cycles or in one drive cycle while the DTC for the same malfunction has been stored in the PCM. • PENDING CODE is available if PCM detects the above malfunction condition during first drive cycle. • FREEZE FRAME DATA is available. • DTC is stored in PCM memory.
POSSIBLE CAUSE	• IAC valve malfunction • Air cleaner element clogged • Air intake passage clogged • A/C relay control circuit malfunction • Generator malfunction • Purge solenoid valve malfunction • Low engine compression (Over capacity of blow-by gas) • PCM malfunction

F3

Diagnostic procedure

STEP	INSPECTION		ACTION
1	**VERIFY FREEZE FRAME DATA HAS BEEN RECORDED** • Has FREEZE FRAME DATA been recorded?	Yes	Go to next step.
		No	Record FREEZE FRAME DATA on repair order, then go to next step.
2	**VERIFY RELATED SERVICE INFORMATION AVAILABILITY** • Check for related Service Information availability. • Is any related Service Information available?	Yes	Perform repair or diagnosis according to available Service Information. • If vehicle is not repaired, go to next step.
		No	Go to next step.
3	**VERIFY RELATED PENDING OR STORED DTCS** • Turn ignition key to OFF, then ON (Engine OFF). • Verify pending code or stored DTCs using WDS or equivalent. • Is any other DTC present?	Yes	Repair applicable DTCs. (See F3–104 DTC TABLE.)
		No	Go to next step.
4	**INSPECT IAC VALVE MALFUNCTION** • Perform IAC valve inspection. (See F3–52 IDLE AIR CONTROL (IAC) VALVE INSPECTION.) • Is IAC valve okay?	Yes	Go to next step.
		No	Replace IAC valve, then go to Step 11.
5	**INSPECT A/C MAGNET CLUTCH OPERATION** • Turn blower motor switch off. • Is magnet clutch still on?	Yes	Go to “A/C IS ALWAYS ON OR A/C COMPRESSOR RUNS CONTINUOUSLY.” of ENGINE SYMPTOM TROUBLESHOOTING then go to step 11. (See F3–264 NO.24 A/C IS ALWAYS ON OR A/C COMPRESSOR RUNS CONTINUOUSLY.)
		No	Go to next step.
6	**INSPECT PURGE SOLENOID VALVE MALFUNCTION** • Perform purge solenoid valve inspection. (See F3–76 PURGE SOLENOID VALVE INSPECTION.) • Is purge solenoid valve okay?	Yes	Go to next step.
		No	Replace purge solenoid valve, then go to Step 11.
7	**INSPECT AIR CLEANER ELEMENT** • Remove air cleaner element with engine running. • Does engine speed increase?	Yes	Replace air cleaner element, then go to Step 11.
		No	Go to next step.
8	**INSPECT THROTTLE BODY PASSAGE** • Is throttle body clogged?	Yes	Clean or replace throttle body passage, then go to Step 11.
		No	Go to next step.

STEP	INSPECTION		ACTION
9	**INSPECT ENGINE COMPRESSION** • Inspect engine compression. (See B3–31 COMPRESSION INSPECTION.) • Is compression okay?	Yes	Go to next step.
		No	Overhaul engine, then go to Step 11.
10	**INSPECT GENERATOR** • Perform generator inspection. (See G–13 GENERATOR INSPECTION.) • Is generator okay?	Yes	Go to next step.
		No	Repair or replace related part, then go to next step.
11	**VERIFY TROUBLESHOOTING OF DTC P0506 COMPLETED** • Make sure to reconnect all disconnected connectors. • Start engine. • Clear DTC from PCM memory using WDS or equivalent. • Depress brake pedal for **14.1 s or more**. • Is PENDING CODE of same DTC present?	Yes	Replace PCM, then go to next step. (See F3–81 PCM REMOVAL/INSTALLATION.)
		No	Go to next step.
12	**VERIFY AFTER REPAIR PROCEDURE** • Perform “After Repair Procedure”. (See F3–104 AFTER REPAIR PROCEDURE.) • Is there any DTC present?	Yes	Go to applicable DTC troubleshooting. (See F3–104 DTC TABLE.)
		No	Troubleshooting completed.

End Of Sta

DTC P0507

AME417001087W04

DTC P0507	Idle control system RPM higher than expected
DETECTION CONDITION	• Actual idle speed is lower than expected by **200 rpm** for **14 s**, when brake pedal is depressed (brake switch is on) and steering wheel is held straight ahead (power steering pressure switch is off). **Note** • If atmospheric pressure is **less than 72.3 kPa {542 mmHg, 21.3 inHg}** or intake air temperature is **below -10 °C {14 °F}**, PCM cancels diagnosis of P0507. **Diagnostic support note** • This is a continuous monitor (CCM). • MIL illuminates if PCM detects the above malfunction conditions in two consecutive drive cycles or in one drive cycle while the DTC for the same malfunction has been stored in the PCM. • PENDING CODE is available if PCM detects the above malfunction condition during first drive cycle. • FREEZE FRAME DATA is available. • DTC is stored in PCM memory.
POSSIBLE CAUSE	• IAC valve malfunction • Accelerator cable misadjusted • Actuator cable misadjusted • Throttle valve malfunction • Vacuum hose misconnection • PCM malfunction

Diagnostic procedure

STEP	INSPECTION		ACTION
1	**VERIFY FREEZE FRAME DATA HAS BEEN RECORDED** • Has FREEZE FRAME DATA been recorded?	Yes	Go to next step.
		No	Record FREEZE FRAME DATA on repair order, then go to next step.
2	**VERIFY RELATED SERVICE INFORMATION AVAILABILITY** • Check for related Service Information availability. • Is any related Service Information available?	Yes	Perform repair or diagnosis according to available Service Information. • If vehicle is not repaired, go to next step.
		No	Go to next step.
3	**VERIFY RELATED PENDING OR STORED DTCS** • Turn ignition key to OFF, then ON (Engine OFF). • Verify pending code or stored DTCs using WDS or equivalent. • Is other DTC present?	Yes	Repair applicable DTCs. (See F3–104 DTC TABLE.)
		No	Go to next step.
4	**INSPECT IAC VALVE MALFUNCTION** • Perform IAC valve inspection. (See F3–52 IDLE AIR CONTROL (IAC) VALVE INSPECTION.) • Is IAC valve okay?	Yes	Go to next step.
		No	Replace IAC valve, then go to Step 9.
5	**INSPECT ACCELERATOR CABLE FREE PLAY** • Turn ignition key to OFF. • Is accelerator cable free play okay? (See F3–55 ACCELERATOR CABLE INSPECTION.)	Yes	Go to next step.
		No	Adjust accelerator cable free play, then go to Step 9. (See F3–55 ACCELERATOR CABLE INSPECTION.)
6	**INSPECT ACTUATOR CABLE FREE PLAY** • Is actuator cable adjustment okay?	Yes	Go to next step.
		No	Adjust actuator cable free play, then go to Step 9.
7	**INSPECT VACUUM HOSE CONNECTION** • Are vacuum hoses connected accurately? (See F3–50 VACUUM HOSE ROUTING DIAGRAM.)	Yes	Go to next step.
		No	Reconnect vacuum hose accurately, then go to step 9.
8	**VISUAL INSPECT THROTTLE VALVE** • Remove throttle body. • Is throttle valve fully closed?	Yes	Go to next step.
		No	Clean or replace throttle body, then go to next step.
9	**VERIFY TROUBLESHOOTING OF DTC P0507 COMPLETED** • Make sure to reconnect all disconnected connectors. • Start engine. • Clear DTC from PCM memory using WDS or equivalent. • Depress brake pedal for **14 s or more**. • Is PENDING CODE of same DTC present?	Yes	Replace PCM, then go to next step. (See F3–81 PCM REMOVAL/INSTALLATION.)
		No	Go to next step.
10	**VERIFY AFTER REPAIR PROCEDURE** • Perform “After Repair Procedure”. (See F3–104 AFTER REPAIR PROCEDURE.) • Is there any DTC present?	Yes	Go to applicable DTC troubleshooting. (See F3–104 DTC TABLE.)
		No	Troubleshooting completed.

End Of Sta

DTC P0511

AME417001087W05

DTC P0511	IAC valve circuit malfunction
DETECTION CONDITION	• If PCM detects that PCM terminal 4G voltage is above or below threshold* when IAC control duty target is **within18—70%**, PCM determines that IAC valve circuit has malfunction. *:Detected threshold value depends on battery voltage and IAC control signal duty value. **Diagnostic support note** • This is a continuous monitor (CCM). • MIL illuminates if PCM detects the above malfunction conditions in first drive cycle. • PENDING CODE is available if PCM detects the above malfunction condition. • FREEZE FRAME DATA is available. • DTC is stored in PCM memory.
POSSIBLE CAUSE	• IAC valve circuit malfunction • Short to ground between IAC valve terminal A and PCM terminal 4G • Open circuit between IAC valve terminal A and PCM terminal 4G • Short to ground between IAC valve terminal B and PCM terminal 4J • Open circuit between IAC valve terminal B and PCM terminal 4J • Short to power between IAC valve terminal A and PCM terminal 4G • Poor connection of IAC valve connector or PCM connector • PCM malfunction

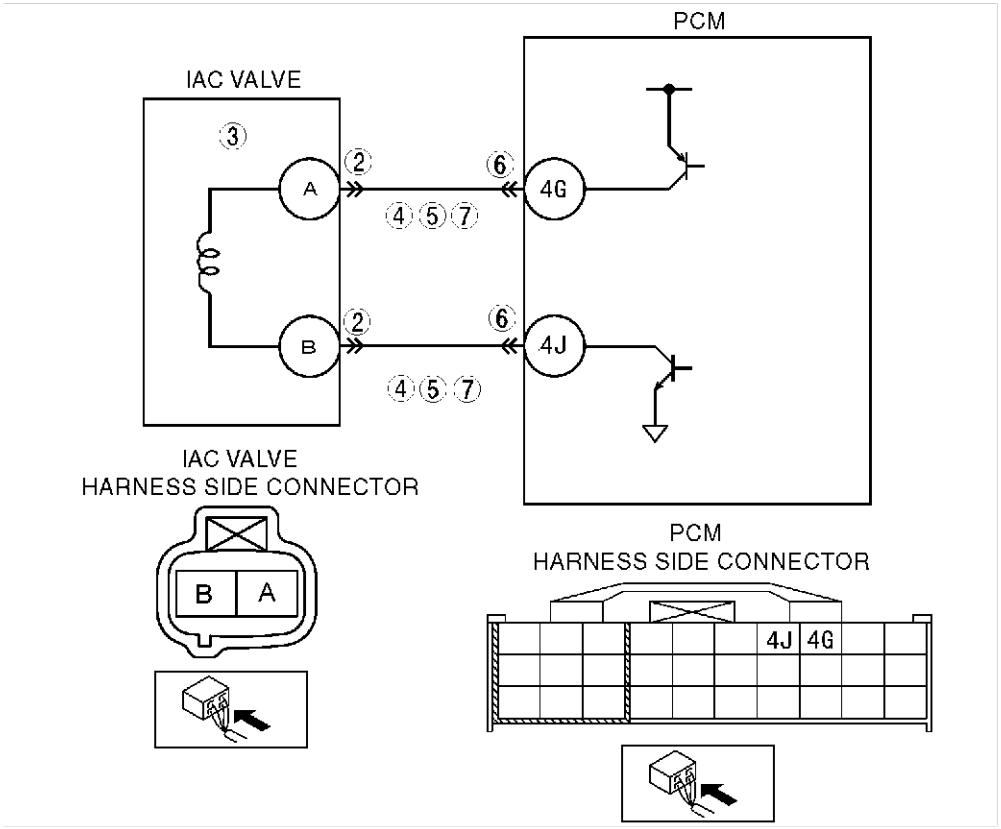

Diagnostic procedure

STEP	INSPECTION		ACTION
1	**PERFORM DTC CONFIRMATION PROCEDURE** • Perform DTC CONFIRMATION PROCEDURE. (See F3–103 DTC CONFIRMATION PROCEDURE.) • Is same DTC present?	Yes	Go to next step.
		No	Intermittent concern exists. Go to INTERMITTENT CONCERN TROUBLESHOOTING procedure. (See F3–270 INTERMITTENT CONCERN TROUBLESHOOTING.)

STEP	INSPECTION		ACTION
2	**INSPECT POOR CONNECTION OF IAC VALVE CONNECTOR** • Turn ignition key to OFF. • Disconnect IAC valve connector. • Check for poor connection (damaged, pulled-out terminals, corrosion, etc.). • Are there any malfunctions?	Yes	Repair or replace terminal, then go to Step 8.
		No	Go to next step.
3	**INSPECT IAC VALVE ELECTRICAL MALFUNCTION** • Inspect IAC valve. (See F3–52 IDLE AIR CONTROL (IAC) VALVE INSPECTION.) • Is IAC valve okay?	Yes	Go to next step.
		No	Replace IAC valve, then go to Step 8.
4	**INSPECT CONTROL CIRCUIT FOR SHORT TO POWER** • Turn ignition key to ON (Engine OFF). • Measure voltage between following IAC valve terminal and body ground. — IAC valve terminal A and body ground — IAC valve terminal B and body ground • Is voltage **B+**?	Yes	Repair or replace harness, then go to Step 8.
		No	Go to next step.
5	**INSPECT CONTROL CIRCUIT FOR SHORT TO GROUND** • Turn ignition key to OFF. • Inspect continuity between following IAC valve terminal B and body ground. — IAC valve terminal A and body ground — IAC valve terminal B and body ground • Is there continuity?	Yes	Repair or replace harness, then go to Step 8.
		No	Go to next step.
6	**INSPECT POOR CONNECTION OF PCM CONNECTOR** • Turn ignition key to OFF • Disconnect PCM connector. • Inspect for poor connection (damaged, pulled-out terminals, corrosion, etc.). • Is there any malfunction?	Yes	Repair terminal, then go to Step 8.
		No	Go to next step.
7	**INSPECT CONTROL CIRCUIT MALFUNCTION FOR OPEN CIRCVIT** • Inspect continuity between following IAC valve terminal and PCM terminal. — IAC valve terminal A and PCM terminal 4G — IAC valve terminal B and PCM terminal 4J • Is there continuity?	Yes	Repair or replace harness, then go to next step.
		No	Go to next step.
8	**VERIFY TROUBLESHOOTING OF DTC P0511 COMPLETED** • Make sure to reconnect all disconnected connectors. • Clear DTC using WDS or equivalent. • Perform KOEO/KOER self-test. (See F3–103 KOEO/KOER SELF-TEST PROCEDURE.) • Is same DTC present?	Yes	Replace PCM, then go to next step. (See F3–81 PCM REMOVAL/INSTALLATION.)
		No	Go to next step.
9	**VERIFY AFTER REPAIR PROCEDURE** • Perform “After Repair Procedure”. (See F3–104 AFTER REPAIR PROCEDURE.) • Is there any DTC present?	Yes	Go to applicable DTC troubleshooting. (See F3–104 DTC TABLE.)
		No	Troubleshooting completed.

End Of Ste

DTC P0550

AME417001087W06

DTC P0550	PSP switch circuit malfunction
DETECTION CONDITION	• PCM monitors PSP switch signal at PCM terminal 1Z. If input voltage is low (switch stays on) for **1 minute** when VSS is **above 60.1 km/h {37.3 mph}** and ECT is **above 60 °C {140 °F}**, PCM determines that PSP switch circuit has malfunction. **Diagnostic support note** • This is a continuous monitor (CCM). • MIL illuminates if PCM detects the above malfunction conditions in two consecutive drive cycles or in one drive cycle while the DTC for the same malfunction has been stored in the PCM. • PENDING CODE is available if PCM detects the above malfunction condition during first drive cycle. • FREEZE FRAME DATA is available. • DTC is stored in PCM memory.
POSSIBLE CAUSE	• PSP switch malfunction • Connector or terminal malfunction • Short to ground in wiring between PSP switch terminal and PCM terminal 1Z • Open circuit in wiring between PSP switch terminal and PCM terminal 1Z • PCM malfunction

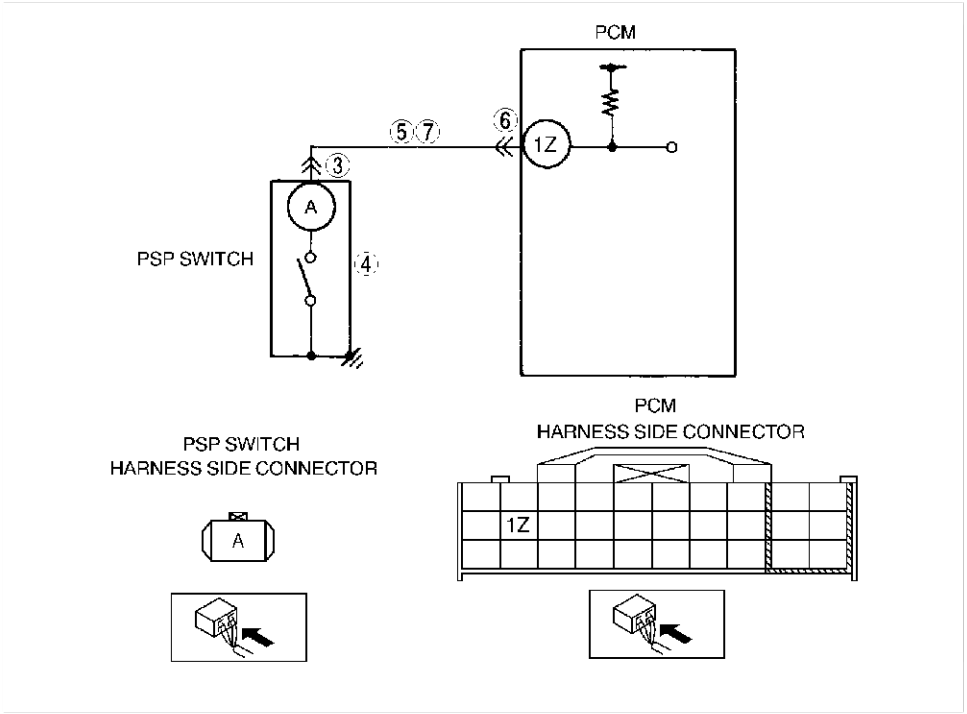

Diagnostic procedure

STEP	INSPECTION		ACTION
1	**VERIFY FREEZE FRAME DATA HAS BEEN RECORDED** • Has FREEZE FRAME DATA been recorded?	Yes	Go to next step.
		No	Record FREEZE FRAME DATA on repair order, then go to next step.
2	**VERIFY RELATED SERVICE INFORMATION AVAILABILITY** • Check for related Service Information availability. • Is any related Service Information available?	Yes	Perform repair or diagnosis according to available Service Information. • If vehicle is not repaired, go to next step.
		No	Go to next step.

STEP	INSPECTION		ACTION
3	**INSPECT POOR CONNECTION OF PSP CONNECTOR** • Turn ignition key to OFF. • Disconnect PSP connector. • Inspect for poor connection (damaged, pulled-out terminals, corrosion, etc.). • Is there any malfunction?	Yes	Repair or replace terminal, then go to Step 8.
		No	Go to next step.
4	**INSPECT PSP SWITCH** • Perform PSP switch inspection. (See F3–95 POWER STEERING PRESSURE (PSP) SWITCH INSPECTION.) • Is PSP switch okay?	Yes	Go to next step.
		No	Replace PSP switch, then go to Step 8.
5	**INSPECT PSP SWITCH SIGNAL CIRCUIT FOR SHORT TO GROUND** • Disconnect PCM connector. • Inspect continuity between PSP switch terminal A and body ground. • Is there continuity?	Yes	Repair or replace harness for short to ground, then go to Step 8.
		No	Go to next step.
6	**INSPECT POOR CONNECTION OF PCM CONNECTOR** • Turn ignition key to OFF • Disconnect PCM connector. • Inspect for poor connection (damaged, pulled-out terminals, corrosion, etc.). • Is there any malfunction?	Yes	Repair terminal, then go to Step 8.
		No	Go to next step.
7	**INSPECT SIGNAL CIRCUIT MALFUNCTION FOR OPEN CIRCUIT** • Inspect continuity between PSP terminal A and PCM terminal 1Z. • Is there continuity?	Yes	Repair or replace harness, then go to next step.
		No	Go to next step.
8	**VERIFY TROUBLESHOOTING OF DTC P0550 COMPLETED** • Make sure to reconnect all disconnected connectors. • Start engine. • Clear DTC from PCM memory using WDS or equivalent. • Drive vehicle **above 60.1 km/h {37.3 mph}** for **1 min**. • Verify that ECT PID **above 60 °C {140 °F}** using WDS or equivalent. • Is PENDING CODE of same DTC present?	Yes	Replace PCM, then go to next step. (See F3–81 PCM REMOVAL/INSTALLATION.)
		No	Go to next step.
9	**VERIFY AFTER REPAIR PROCEDURE** • Perform “After Repair Procedure”. (See F3–104 AFTER REPAIR PROCEDURE.) • Is there any DTC present?	Yes	Go to applicable DTC troubleshooting. (See F3–104 DTC TABLE.)
		No	Troubleshooting completed.

End Of Sta

DTC P0661

AME417001088W01

DTC P0661	VIS control solenoid valve circuit low input
DETECTION CONDITION	• PCM monitors VIS control solenoid valve control signal at PCM terminal 4R. If PCM turns VIS control solenoid valve off but voltage at PCM terminal 4R still remains low, PCM determines that VIS control solenoid valve circuit has malfunction.
POSSIBLE CAUSE	• VIS control solenoid valve malfunction • Open circuit in wiring between main relay and VIS control solenoid valve terminal A • Open circuit in wiring between VIS control solenoid valve terminal B and PCM terminal 4R • Short to ground in wiring between VIS control solenoid valve terminal B and PCM terminal 4R • Poor connection at VIS control solenoid valve or PCM connector • PCM malfunction

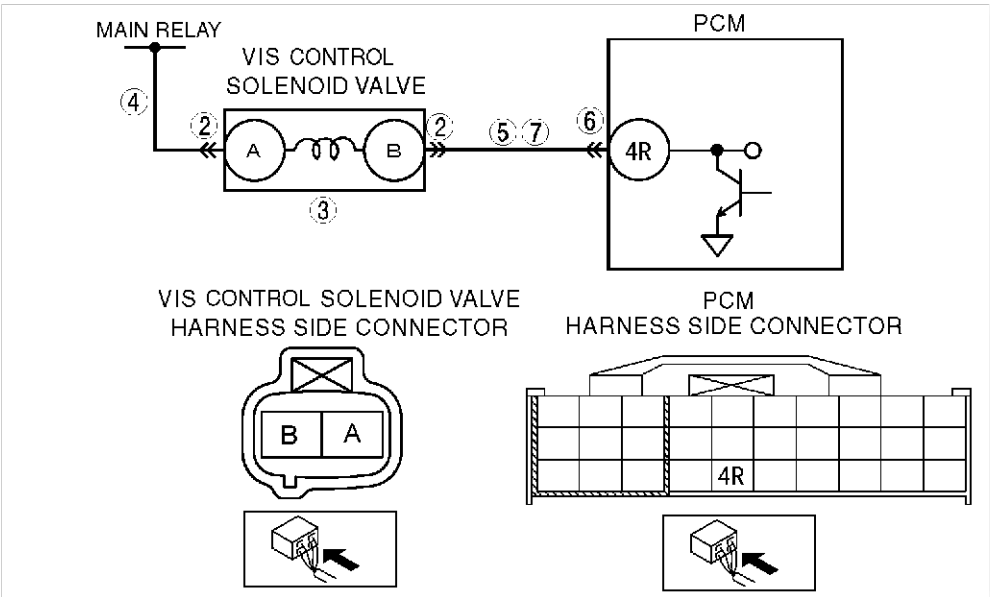

Diagnostic procedure

STEP	INSPECTION		ACTION
1	**PERFORM DTC CONFIRMATION PROCEDURE** • Perform DTC CONFIRMATION PROCEDURE. (See F3–103 DTC CONFIRMATION PROCEDURE.) • Is same DTC present?	Yes	Go to next step.
		No	Intermittent concern exists. Go to INTERMITTENT CONCERN TROUBLESHOOTING procedure. (See F3–270 INTERMITTENT CONCERN TROUBLESHOOTING.)
2	**INSPECT VIS CONTROL SOLENOID VALVE CONNECTOR FOR POOR CONNECTION** • Turn ignition key to OFF. • Disconnect VIS control solenoid valve connector. • Inspect for poor connection (damaged/pulled-out pins, corrosion, etc.). • Is there any malfunction?	Yes	Repair or replace terminal, then go to Step 8.
		No	Go to next step.

STEP	INSPECTION		ACTION
3	**INSPECT VIS CONTROL SOLENOID VALVE MALFUNCTION** • Perform VIS control solenoid valve inspection. (See F3–53 VARIABLE INTAKE-AIR SYSTEM (VIS) CONTROL SOLENOID VALVE INSPECTION.) • Is VIS control solenoid valve okay?	Yes	Go to next step.
		No	Replace VIS control solenoid valve, then go to step 8.
4	**INSPECT VIS CONTROL SOLENOID VALVE POWER SUPPLY CIRCUIT FOR OPEN** • Turn ignition key to ON (Engine OFF). • Measure voltage between VIS control solenoid valve terminal A (harness-side) and body ground. • Is voltage **B+**?	Yes	Go to next step.
		No	Repair or replace harness for open, then go to Step 8.
5	**INSPECT VIS CONTROL SOLENOID VALVE CONTROL CIRCUIT FOR SHORT TO GROUND** • Inspect continuity between VIS control solenoid valve terminal B (harness-side) and body ground. • Is there continuity?	Yes	Repair or replace harness for short to ground, then go to Step 8.
		No	Go to next step.
6	**INSPECT PCM CONNECTOR FOR POOR CONNECTION** • Disconnect PCM connector. • Inspect for poor connection at terminal 4R. (damaged/pulled-out pins, corrosion, etc.). • Is there any malfunction?	Yes	Repair terminal, then go to Step 8.
		No	Go to next step.
7	**INSPECT VIS CONTROL SOLENOID VALVE CONTROL CIRCUIT FOR OPEN** • Inspect for continuity between VIS control solenoid valve terminal B (harness-side) and PCM terminal 4R (harness-side). • Is there continuity?	Yes	Go to next step.
		No	Repair or replace harness for open, then go to next step.
8	**VERIFY TROUBLESHOOTING OF DTC P0661 COMPLETED** • Make sure to reconnect all disconnected connectors. • Turn ignition key to ON (Engine OFF). • Clear DTC from PCM memory using WDS or equivalent. • Perform KOER self-test. (See F3–103 KOEO/KOER SELF-TEST PROCEDURE.) • Is same DTC present?	Yes	Replace PCM, then go to next step. (See F3–81 PCM REMOVAL/INSTALLATION.)
		No	Go to next step.
9	**VERIFY AFTER REPAIR PROCEDURE** • Perform “After Repair Procedure”. (See F3–104 AFTER REPAIR PROCEDURE.) • Is there any DTC present?	Yes	Go to applicable DTC troubleshooting. (See F3–104 DTC TABLE.)
		No	Troubleshooting completed.

End Of Sie

DTC P0662

AME417001088W02

DTC P0662	VIS control solenoid valve circuit high input
DETECTION CONDITION	• PCM monitors VIS control solenoid valve control signal at PCM terminal 4R. If PCM turns VIS control solenoid valve on but voltage at PCM terminal 4R still remains high, PCM determines that VIS control solenoid valve circuit has malfunction.
POSSIBLE CAUSE	• VIS control solenoid valve malfunction • Short to power circuit between VIS control solenoid valve terminal B and PCM terminal 4R • Connector or terminal malfunction • PCM malfunction

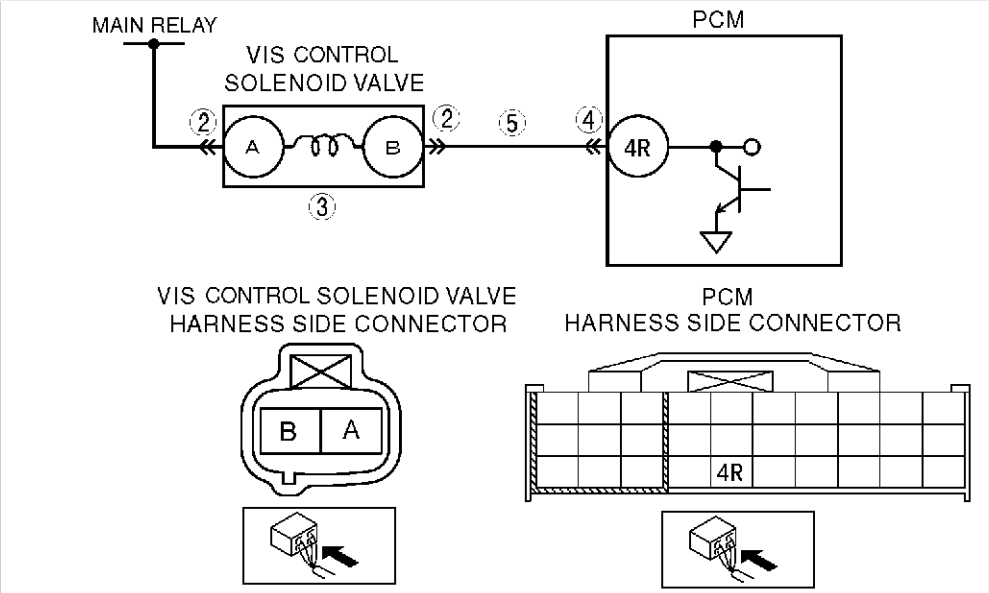

Diagnostic procedure

STEP	INSPECTION		ACTION
1	**PERFORM DTC CONFIRMATION PROCEDURE** • Perform DTC CONFIRMATION PROCEDURE. (See F3–103 DTC CONFIRMATION PROCEDURE.) • Is same DTC present?	Yes	Go to next step.
		No	Intermittent concern exists. Go to INTERMITTENT CONCERN TROUBLESHOOTING procedure. (See F3–270 INTERMITTENT CONCERN TROUBLESHOOTING.)
2	**INSPECT VIS CONTROL SOLENOID VALVE CONNECTOR FOR POOR CONNECTION** • Turn ignition key to OFF. • Disconnect VIS control solenoid valve connector. • Check for poor connection (damaged/pulled-out pins, corrosion, etc.). • Is there any malfunction?	Yes	Repair or replace terminal, then go to Step 6.
		No	Go to next step.

STEP	INSPECTION		ACTION
3	**INSPECT VIS CONTROL SOLENOID VALVE MALFUNCTION** • Perform VIS control solenoid valve inspection. (See F3–53 VARIABLE INTAKE-AIR SYSTEM (VIS) CONTROL SOLENOID VALVE INSPECTION.) • Is VIS solenoid valve okay?	Yes	Go to next step.
		No	Replace VIS control solenoid valve, then go to Step 6.
4	**INSPECT PCM CONNECTOR FOR POOR CONNECTION** • Turn ignition key to OFF. • Disconnect PCM connector. • Inspect for poor connection at terminal 4R. (damaged/pulled-out pins, corrosion, etc.). • Is there any malfunction?	Yes	Repair terminal, then go to Step 6.
		No	Go to next step.
5	**INSPECT VIS CONTROL SOLENOID VALVE CONTROL CIRCUIT SHORT TO POWER** • Turn ignition key to ON (Engine OFF). • Measure voltage between VIS control solenoid valve terminal B (harness-side) and body ground. • Is voltage **B+**?	Yes	Repair or replace harness for open, then go to next step.
		No	Go to next step.
6	**VERIFY TROUBLESHOOTING OF DTC P0662 COMPLETED** • Make sure to reconnect all disconnected connectors. • Turn ignition key to ON (Engine OFF). • Clear DTC from PCM memory using WDS or equivalent. • Perform KOEO/KOER self-test. (See F3–103 KOEO/KOER SELF-TEST PROCEDURE.) • Is same DTC present?	Yes	Replace PCM, then go to next step. (See F3–81 PCM REMOVAL/INSTALLATION.)
		No	Go to next step.
7	**VERIFY AFTER REPAIR PROCEDURE** • Perform “After Repair Procedure”. (See F3–104 AFTER REPAIR PROCEDURE.) • Is there any DTC present?	Yes	Go to applicable DTC troubleshooting. (See F3–104 DTC TABLE.)
		No	Troubleshooting completed.

End Of Sto

DTC P0703

AME417001089W01

DTC P0703	Brake switch input malfunction
DETECTION CONDITION	• PCM monitors changes in input voltage from brake switch. If PCM does not detect PCM terminal 1K voltage changes while alternately accelerating and decelerating **10 times**, PCM determines that neutral switch circuit has malfunction. **Diagnostic support note** • This is a continuous monitor (CCM). • MIL illuminates if PCM detects the above malfunction condition in two consecutive drive cycles or in one drive cycle while the DTC for the same malfunction has been stored in the PCM. • PENDING CODE is available if PCM detects the above malfunction condition during first drive cycle. • FREEZE FRAME DATA is available. • DTC is stored in PCM memory.
POSSIBLE CAUSE	• Brake switch malfunction • Poor connection of brake switch connector or PCM connector • Short to power between brake switch terminal B and PCM connector terminal 1K • Open harness between brake switch terminal B and PCM connector terminal 1K • Open harness between battery positive terminal and brake switch terminal A • PCM malfunction

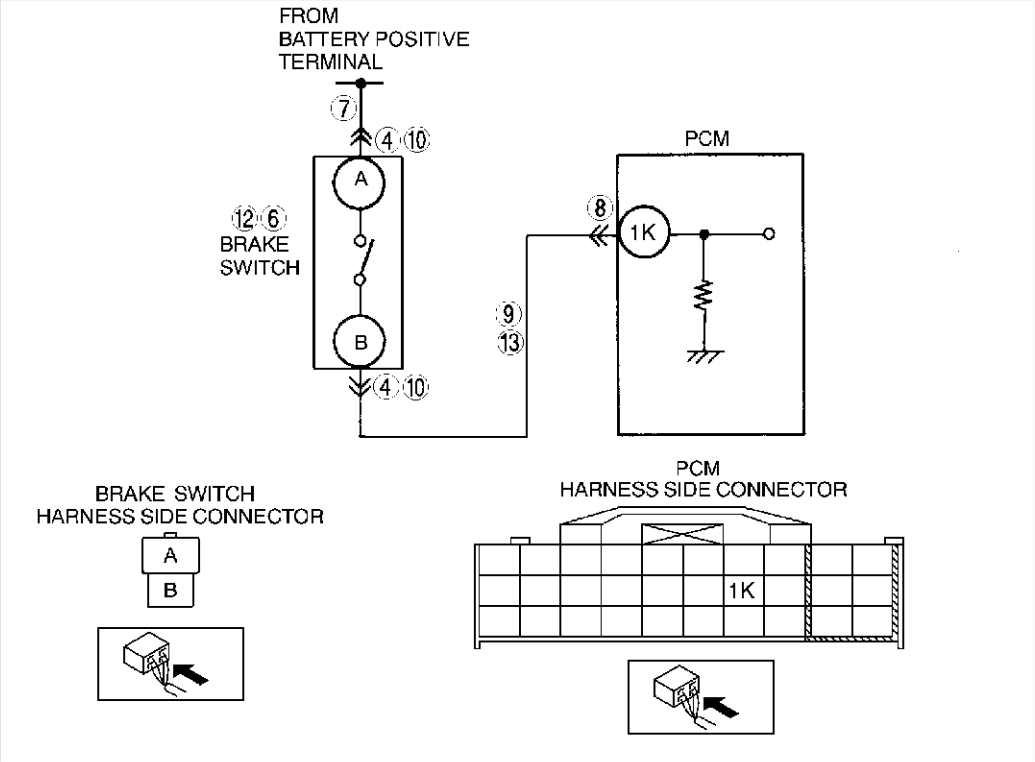

Diagnostic procedure

STEP	INSPECTION		ACTION
1	**VERIFY FREEZE FRAME DATA HAS BEEN RECORDED** • Has FREEZE FRAME DATA been recorded?	Yes	Go to next step.
		No	Record FREEZE FRAME DATA on repair order, then go to next step.
2	**VERIFY RELATED SERVICE INFORMATION AVAILABILITY** • Check for related Service Information availability. • Is any related Service Information available?	Yes	Perform repair or diagnosis according to available Service Information. • If vehicle is not repaired, go to next step.
		No	Go to next step.
3	**CLASSIFY HIGH INPUT OR LOW INPUT** • Connect WDS or equivalent to DLC-2. • Access BOO PID. • Verify BOO PID during brake pedal operation. • Is BOO PID always OFF?	Yes	Go to Next step.
		No	Go to Step 10.

STEP	INSPECTION		ACTION
4	**INSPECT BRAKE SWITCH CONNECTOR FOR POOR CONNECTION** • Turn ignition switch to OFF. • Disconnect brake switch connector. • Inspect for poor connection (damaged/pulled-out terminals, corrosion, etc.). • Is there any malfunction?	Yes	Repair or replace terminal, then go to Step 14.
		No	Go to next step.
5	**CLASSIFY BRAKE SWITCH OR CIRCUIT** • Connect WDS or equivalent to DLC-2. • Access BOO PID. • Connect a jumper wire between brake switch terminal A and B. • Is BOO PID on?	Yes	Go to next step.
		No	Go to Step 7.
6	**INSPECT BRAKE SWITCH** • Perform brake switch inspection. • Is brake switch okay?	Yes	Go to Step 14.
		No	Replace brake switch, then go to Step 14.
7	**INSPECT BRAKE SWITCH POWER CIRCUIT FOR OPEN CIRCUIT** • Measure voltage between brake switch connector terminal A and body ground. • Is voltage **B+**?	Yes	Go to next step.
		No	Repair or replace brake switch power circuit for open, then Go to Step 14.
8	**INSPECT PCM CONNECTOR FOR POOR CONNECTION** • Turn ignition switch to OFF. • Disconnect PCM connector. • Inspect for poor connection (damaged/pulled-out terminals, corrosion, etc.). • Is there any malfunction?	Yes	Repair or replace terminal, then go to Step 14.
		No	Go to next step.
9	**INSPECT BRAKE SWITCH SIGNAL CIRCUIT FOR OPEN CIRCUIT** • Inspect continuity between brake switch terminal B and PCM terminal 1K. • Is there continuity?	Yes	Repair or replace harness for open, then go to Step 14.
		No	Go to Step 14.
10	**INSPECT BRAKE SWITCH CONNECTOR FOR POOR CONNECTION** • Turn ignition switch to OFF. • Disconnect brake switch connector. • Inspect for poor connection (damaged/pulled-out terminals, corrosion, etc.). • Is there any malfunction?	Yes	Repair or replace terminal, then go to Step 14.
		No	Go to next step.
11	**CLASSIFY BRAKE SWITCH OR CIRCUIT** • Connect WDS or equivalent to DLC-2. • Access BOO PID. • Verify that BOO PID changes from ON to OFF when brake switch connector disconnected. • Does BOO PID change from ON to OFF?	Yes	Go to next step.
		No	Go to Step 13.
12	**INSPECT BRAKE SWITCH** • Perform brake switch inspection. • Is brake switch okay?	Yes	Go to Step 14.
		No	Replace brake switch, then go to Step 14.
13	**INSPECT BRAKE SWITCH SIGNAL CIRCUIT FOR SHORT TO POWER** • Measure voltage between brake switch connector terminal B and body ground. • Is voltage **B+**?	Yes	Repair or replace harness for short to power, then go to Step 14.
		No	Go to next step.
14	**VERIFY TROUBLESHOOTING OF DTC P0703 COMPLETED** • Make sure to reconnect all disconnected connectors. • Clear DTC from memory using WDS or equivalent. • Drive vehicle **30 km/h {18.6 mph} or more**. • Depress and release brake pedal **more than 10 times** while driving vehicle. • Is PENDING CODE of same DTC present?	Yes	Replace PCM, then go to next step. (See F3–81 PCM REMOVAL/INSTALLATION.)
		No	Go to next step.
15	**VERIFY AFTER REPAIR PROCEDURE** • Perform “After Repair Procedure”. (See F3–104 AFTER REPAIR PROCEDURE.) • Is there DTC present?	Yes	Go to applicable DTC troubleshooting. (See F3–104 DTC TABLE.)
		No	Troubleshooting completed.

End Of Ste

DTC P0704

AME417001089W02

DTC P0704	Clutch switch circuit malfunction
DETECTION CONDITION	• PCM monitors changes in input voltage from clutch switch. If PCM does not detect PCM terminal 1R voltage changes while running vehicle with vehicle speed **below 30 km/h {19mph} 10 times** alternately, PCM determines that clutch switch circuit has malfunction. **Diagnostic support note** • This is a continuous monitor (CCM). • MIL illuminates if PCM detects the above malfunction condition in two consecutive drive cycles or in one drive cycle while the DTC for the same malfunction has been stored in the PCM. • PENDING CODE is available if PCM detects the above malfunction condition during first drive cycle. • FREEZE FRAME DATA is available. • DTC is stored in PCM memory.
POSSIBLE CAUSE	• Clutch switch malfunction • Poor connection of clutch switch connector or PCM connector • Short to ground between clutch switch terminal C and PCM connector terminal 1R • Open harness between clutch switch terminal C and PCM connector terminal 1R • Open harness between ground and clutch switch terminal E • PCM malfunction

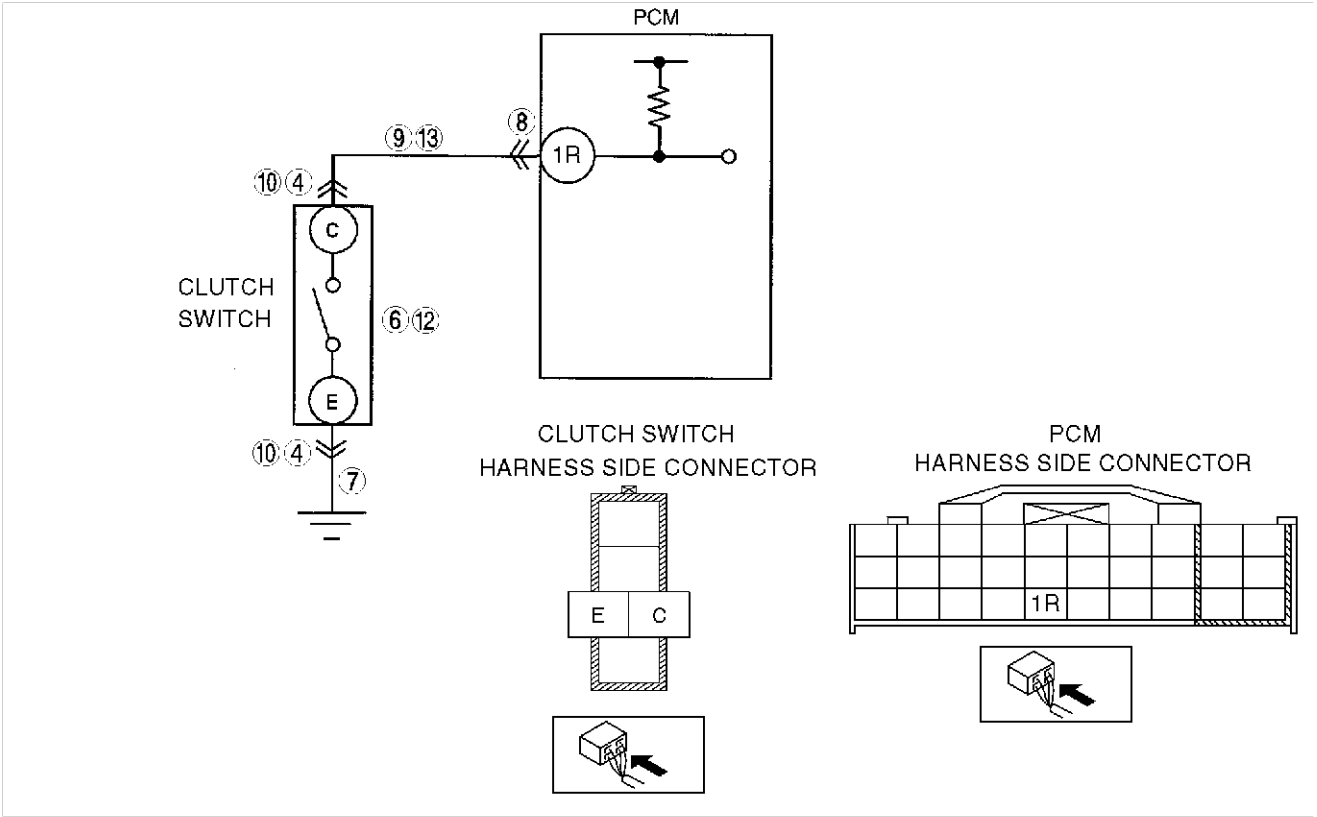

Diagnostic procedure

STEP	INSPECTION		ACTION
1	**VERIFY FREEZE FRAME DATA HAS BEEN RECORDED** • Has FREEZE FRAME DATA been recorded?	Yes	Go to next step.
		No	Record FREEZE FRAME DATA on repair order, then go to next step.
2	**VERIFY RELATED REPAIR INFORMATION AVAILABILITY** • Check for related Service information availability. • Is any related Service information available?	Yes	Perform repair or diagnosis according to available Service information. • If vehicle is not repaired, go to next step.
		No	Go to next step.
3	**CLASSIFY HIGH INPUT OR LOW INPUT** • Connect WDS or equivalent to DLC-2. • Access CPP PID. • Verify CPP PID during clutch pedal operation. • Is CPP PID always OFF?.	Yes	Go to Next step.
		No	Go to Step 10.

STEP	INSPECTION		ACTION
4	**INSPECT CLUTCH SWITCH CONNECTOR FOR POOR CONNECTION** • Turn ignition switch to OFF. • Disconnect clutch switch connector. • Inspect for poor connection (damaged/pulled-out terminals, corrosion, etc.). • Is there any malfunction?	Yes	Repair or replace terminal, then go to Step 14.
		No	Go to next step.
5	**CLASSIFY CLUTCH SWITCH OR CIRCUIT** • Connect WDS or equivalent to DLC-2. • Access CPP PID. • Connect a jumper wire between clutch switch terminal C and E. • Is CPP PID on?	Yes	Go to next step.
		No	Go to Step 7.
6	**INSPECT CLUTCH SWITCH** • Perform clutch switch inspection. (See F3–96 CLUTCH SWITCH INSPECTION.) • Is clutch switch okay?	Yes	Go to Step 14.
		No	Replace clutch switch, then go to Step 14.
7	**INSPECT CLUTCH SWITCH GROUND CIRCUIT FOR OPEN CIRCUIT** • Inspect continuity between clutch switch terminal E and ground. • Is there continuity?	Yes	Go to next step.
		No	Repair or replace clutch switch power circuit for open, then Go to Step 14.
8	**INSPECT PCM CONNECTOR FOR POOR CONNECTION** • Turn ignition switch to OFF. • Disconnect PCM connector. • Inspect for poor connection (damaged/pulled-out terminals, corrosion, etc.). • Is there any malfunction?	Yes	Repair or replace terminal, then go to Step 14.
		No	Go to next step.
9	**INSPECT CLUTCH SWITCH SIGNAL CIRCUIT FOR OPEN CIRCUIT** • Check continuity between clutch switch terminal C and PCM terminal 1R. • Is there continuity?	Yes	Repair or replace harness for open, then go to Step 14.
		No	Go to Step 14.
10	**INSPECT CLUTCH SWITCH CONNECTOR FOR POOR CONNECTION** • Turn ignition switch to OFF. • Disconnect clutch switch connector. • Inspect for poor connection (damaged/pulled-out terminals, corrosion, etc.). • Is there any malfunction?	Yes	Repair or replace terminal, then go to Step 14.
		No	Go to next step.
11	**CLASSIFY CLUTCH SWITCH OR CIRCUIT** • Connect WDS or equivalent to DLC-2. • Access CPP PID. • Verify that CPP PID changes from ON to OFF when clutch switch connector disconnected. • Does CPP PID change from ON to OFF?	Yes	Go to next step.
		No	Go to Step 13.
12	**INSPECT CLUTCH SWITCH** • Perform clutch switch inspection. (See F3–96 CLUTCH SWITCH INSPECTION.) • Is clutch switch okay?	Yes	Go to Step 14.
		No	Replace clutch switch, then go to Step 14.
13	**INSPECT CLUTCH SWITCH SIGNAL CIRCUIT FOR SHORT TO GROUND** • Inspect continuity between clutch switch terminal C and ground. • Is there continuity?	Yes	Repair or replace harness for short to ground, then go to Step 14.
		No	Go to Next step.
14	**VERIFY TROUBLESHOOTING OF DTC P0704 COMPLETED** • Make sure to reconnect all disconnected connectors. • Start engine. • Clear DTC from PCM memory using WDS or equivalent. • Operate clurch pedal while driving vehicle **below 30 km/h {19 mph} 10 times** alternately. • Is same DTC present?	Yes	Replace PCM, then go to next step. (See F3–81 PCM REMOVAL/INSTALLATION.)
		No	Go to next step.
15	**VERIFY AFTER REPAIR PROCEDURE** • Perform “After Repair Procedure”. (See F3–104 AFTER REPAIR PROCEDURE.) • Is there any DTC present?	Yes	Go to applicable DTC troubleshooting. (See F3–104 DTC TABLE.)
		No	Troubleshooting completed.

End Of Sie

DTC P0850

AME417001089W03

DTC P0850	Neutral switch circuit malfunction
DETECTION CONDITION	• PCM monitors changes in input voltage from neutral switch. If PCM does not detect PCM terminal 1W voltage changes while running vehicle with vehicle speed **above 30 km/h {19 mph}** and clutch pedal turns press and depress **10 times** repeatedly, PCM determines that neutral switch circuit has malfunction **Diagnostic support note** • This is a continuous monitor (CCM). • MIL illuminates if PCM detects the above malfunction condition in two consecutive drive cycles or in one drive cycle while the DTC for the same malfunction has been stored in the PCM. • PENDING CODE is available if PCM detects the above malfunction condition during first drive cycle. • FREEZE FRAME DATA is available. • DTC is stored in PCM memory.
POSSIBLE CAUSE	• Neutral switch malfunction • Poor connection of neutral switch connector or PCM connector • Short to ground between neutral switch terminal A and PCM connector terminal 1W • Open harness between neutral switch terminal A and PCM connector terminal 1W • Open harness between ground and brake switch terminal B • PCM malfunction

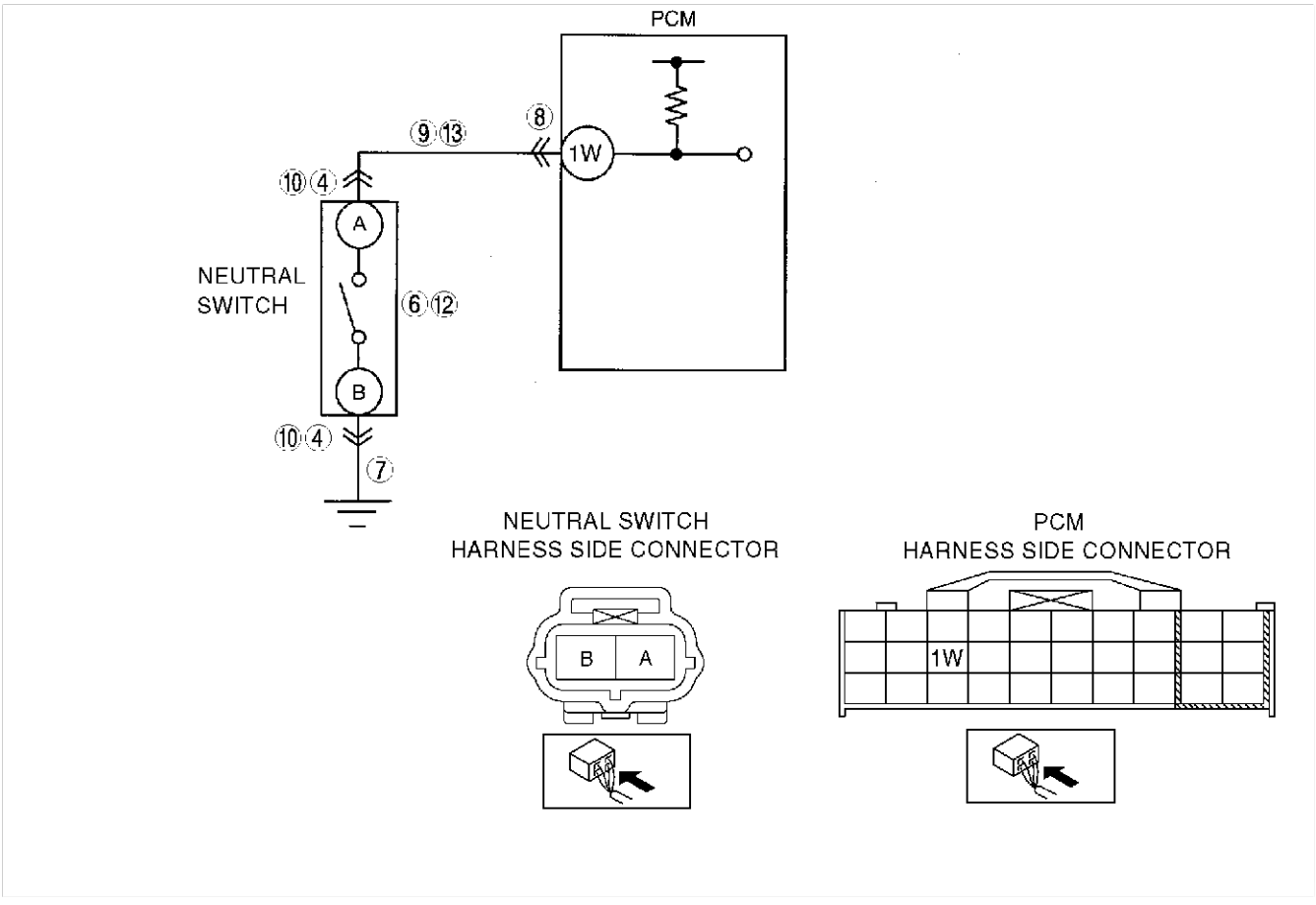

Diagnostic procedure

STEP	INSPECTION		ACTION
1	**VERIFY FREEZE FRAME DATA HAS BEEN RECORDED** • Has FREEZE FRAME DATA been recorded?	Yes	Go to next step.
		No	Record FREEZE FRAME DATA on repair order, then go to next step.
2	**VERIFY RELATED SERVICE INFORMATION AVAILABILITY** • Check for related Service Information availability. • Is any related Service Information available?	Yes	Perform repair or diagnosis according to available Service Information. • If vehicle is not repaired, go to next step.
		No	Go to next step.

STEP	INSPECTION		ACTION
3	**CLASSIFY HIGH INPUT OR LOW INPUT** • Connect WDS or equivalent to DLC-2. • Access CPP/PNP PID. • Verify CPP/PNP PID when gear is in neutral position. • Is CPP/PNP PID always OFF?.	Yes	Go to Next step.
		No	Go to Step 10.
4	**INSPECT NEUTRAL SWITCH CONNECTOR FOR POOR CONNECTION** • Turn ignition switch to OFF. • Disconnect neutral switch connector. • Check for poor connection (damaged/pulled-out terminals, corrosion, etc.). • Is there any malfunction?	Yes	Repair or replace terminal, then go to Step 14.
		No	Go to next step.
5	**CLASSIFY NEUTRAL SWITCH OR CIRCUIT** • Connect WDS or equivalent to DLC-2. • Access CPP/PNP PID. • Connect a jumper wire between neutral switch terminal A and B. • Is CPP/PNP PID on?	Yes	Go to next step.
		No	Go to Step 7.
6	**INSPECT NEUTRAL SWITCH** • Perform neutral switch inspection. (See F3–97 NEUTRAL SWITCH INSPECTION.) • Is neutral switch okay?	Yes	Go to Step 14.
		No	Replace neutral switch, then go to Step 14.
7	**INSPECT NEUTRAL SWITCH GROUND CIRCUIT FOR OPEN CIRCUIT** • Inspect continuity between neutral switch terminal B and ground. • Is there continuity?	Yes	Go to next step.
		No	Repair or replace neutral switch power circuit for open, then Go to Step 14.
8	**INSPECT PCM CONNECTOR FOR POOR CONNECTION** • Turn ignition switch to OFF. • Disconnect PCM connector. • Inspect for poor connection (damaged/pulled-out terminals, corrosion, etc.). • Is there any malfunction?	Yes	Repair or replace terminal, then go to Step 14.
		No	Go to next step.
9	**INSPECT NEUTRAL SWITCH SIGNAL CIRCUIT FOR OPEN CIRCUIT** • Inspect continuity between neutral switch terminal A and PCM terminal 1W. • Is there continuity?	Yes	Repair or replace harness for open, then go to Step 14.
		No	Go to Step 14.
10	**INSPECT NEUTRAL SWITCH CONNECTOR FOR POOR CONNECTION** • Turn ignition switch to OFF. • Disconnect neutral switch connector. • Inspect for poor connection (damaged/pulled-out terminals, corrosion, etc.). • Is there any malfunction?	Yes	Repair or replace terminal, then go to Step 14.
		No	Go to next step.
11	**CLASSIFY NEUTRAL SWITCH OR CIRCUIT** • Connect WDS or equivalent to DLC-2. • Access CPP/PNP PID. • Verify that CPP/PNP PID changes from ON to OFF when neutral switch connector is disconnected. • Does CPP/PNP PID change from ON to OFF?	Yes	Go to next step.
		No	Go to Step 13.
12	**INSPECT NEUTRAL SWITCH** • Perform neutral switch inspection. (See F3–97 NEUTRAL SWITCH INSPECTION.) • Is neutral switch okay?	Yes	Go to Step 14.
		No	Replace neutral switch, then go to Step 14.
13	**INSPECT NEUTRAL SWITCH SIGNAL CIRCUIT FOR SHORT TO GROUND** • Inspect continuity between neutral switch terminal A and ground. • Is there continuity?	Yes	Repair or replace harness for short to ground, then go to Step 14.
		No	Go to Next step.

STEP	INSPECTION		ACTION
14	**VERIFY TROUBLESHOOTING OF DTC P0850 COMPLETED** • Make sure to reconnect all disconnected connectors. • Start engine. • Clear DTC from PCM memory using WDS or equivalent. • Drive vehicle **above 30 km/h {19 mph}** and stop vehicle. • Depress and release clutch pedal **more than 10 times** during drive cycle. • Is same DTC present?	Yes	Replace PCM, then go to next step. (See F3–81 PCM REMOVAL/INSTALLATION.)
		No	Go to next step.
15	**VERIFY AFTER REPAIR PROCEDURE** • Perform “After Repair Procedure”. (See F3–104 AFTER REPAIR PROCEDURE.) • Is there any DTC present?	Yes	Go to applicable DTC troubleshooting. (See F3–104 DTC TABLE.)
		No	Troubleshooting completed.

End Of Sie

DTC P1562

AME417001083W01

DTC P1562	PCM +BB (back up battery) voltage low
DETECTION CONDITION	• PCM monitors voltage of back up battery positive at PCM terminal 2Z. If PCM detects battery positive terminal voltage **below 2.5V** for **2 s**, PCM determines that back up voltage circuit has malfunction. **Diagnostic support note** • This is a continuous monitor (CCM). • MIL illuminates if PCM detects the above malfunction condition during first drive cycle. • PENDING CODE is available if PCM detects the above malfunction condition. • FREEZE FRAME DATA is available. • DTC is stored in the PCM memory.
POSSIBLE CAUSE	• Melted EEC fuse • Open circuit in wiring EEC fuse and PCM terminal 2Z • Poor connection of PCM connector. • PCM malfunction • Short to ground between EEC fuse and PCM terminal 2Z

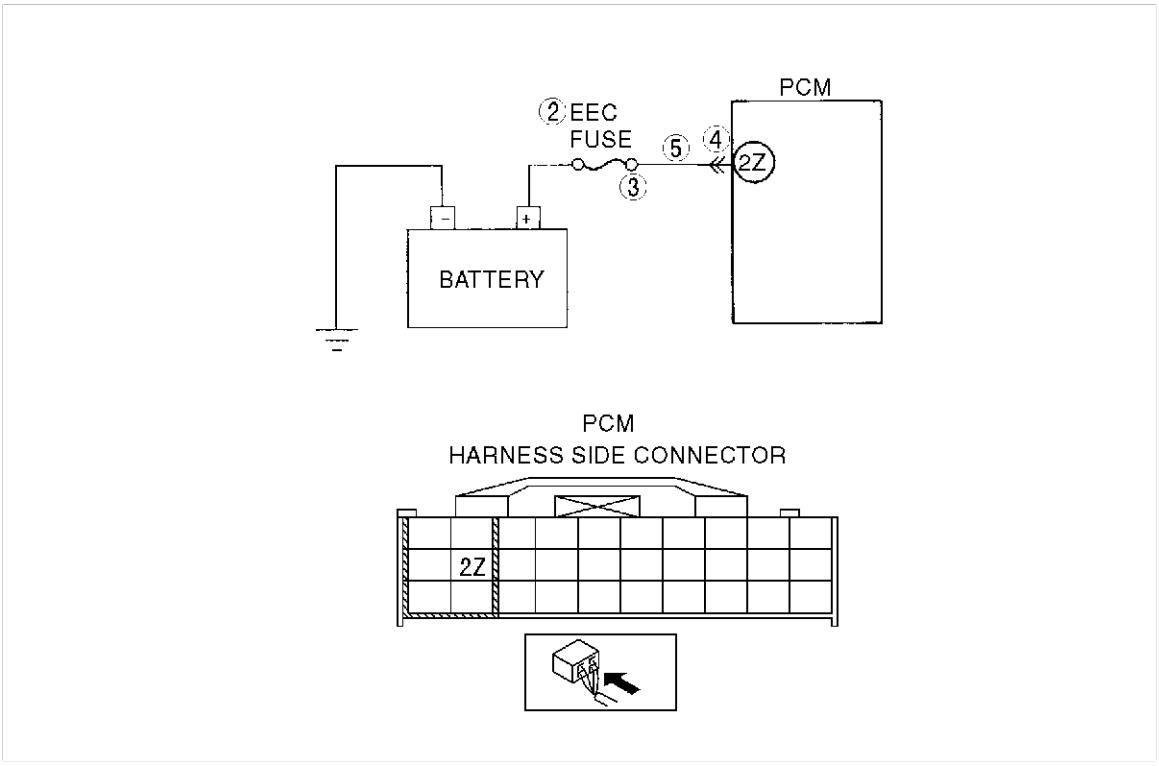

Diagnostic procedure

STEP	INSPECTION		ACTION
1	**PERFORM DTC CONFIRMATION PROCEDURE** • Perform DTC CONFIRMATION PROCEDURE. (See F3–103 DTC CONFIRMATION PROCEDURE.) • Is same DTC present?	Yes	Go to next step.
		No	Intermittent concern exists. Go to INTERMITTENT CONCERN TROUBLESHOOTING procedure. (See F3–270 INTERMITTENT CONCERN TROUBLESHOOTING.)
2	**INSPECT EEC FUSE** • Turn ignition key to OFF. • Inspect EEC fuse for failure and proper installation. • Is fuse okay?	Yes	Go to step 5.
		No	• If EEC fuse has melted down, then go to next step. • If EEC fuse is not installed correctly, install it correctly then go to Step 6.
3	**INSPECT MONITOR CIRCUIT FOR SHORT TO GROUND** • Disconnect battery cables. • Inspect continuity between EEC fuse terminal and body ground. • Is there continuity?	Yes	Repair or replace harness for short to ground and install new fuse, then go to Step 6.
		No	Go to step 6.
4	**INSPECT POOR CONNECTION OF PCM CONNECTOR** • Disconnect PCM connector. • Inspect for poor connection (damaged, pulled-out terminals, corrosion, etc.). • Is there any malfunction?	Yes	Repair terminals, then go to Step 6.
		No	Go to next step.
5	**INSPECT MONITOR CIRCUIT FOR OPEN CIRCUIT** • Disconnect battery cables. • Inspect continuity between EEC fuse terminal and PCM terminal 2Z (harness side). • Is there continuity?	Yes	Go to next step.
		No	Repair or replace harness for open, then go to next step.
6	**VERIFY TROUBLESHOOTING OF DTC P1562 COMPLETED** • Make sure to reconnect all disconnected connectors. • Clear DTC from PCM memory using WDS or equivalent. • Perform KOEO/KOER self-test. (See F3–103 KOEO/KOER SELF-TEST PROCEDURE.) • Is same DTC present?	Yes	Replace PCM, then go to next step. (See F3–81 PCM REMOVAL/INSTALLATION.)
		No	Go to next step.
7	**VERIFY AFTER REPAIR PROCEDURE** • Perform “After Repair Procedure”. (See F3–104 AFTER REPAIR PROCEDURE.) • Is there any DTC present?	Yes	Go to applicable DTC troubleshooting. (See F3–104 DTC TABLE.)
		No	Troubleshooting completed.

End Of Sta

DTC P1602

AME417001083W02

DTC P1602	Immobilizer unit-PCM communication error
DETECTION CONDITION	• Command transmission from the PCM to the immobilizer unit exceeds limit. • No response from immobilizer unit.
POSSIBLE CAUSE	• Immobilizer unit malfunction • Coil (immobilizer system) malfunction • Key (transponder) malfunction • PCM malfunction • Open circuit in wiring between immobilizer unit terminal A and PCM terminal 2Q • Open circuit in wiring between immobilizer unit terminal C and body ground • Open circuit in wiring between immobilizer unit terminal F and coil terminal A • Open circuit in wiring between immobilizer unit terminal D and coil terminal C • Short to ground circuit in wiring between immobilizer unit terminal A and PCM terminal 2Q • Short to ground circuit in wiring between immobilizer unit terminal F and coil terminal A • Short to ground circuit in wiring between immobilizer unit terminal D and coil terminal C • Poor connection of immobilizer unit, PCM connector or coil • Open circuit in wiring between immobilizer unit terminal J and battery positive terminal

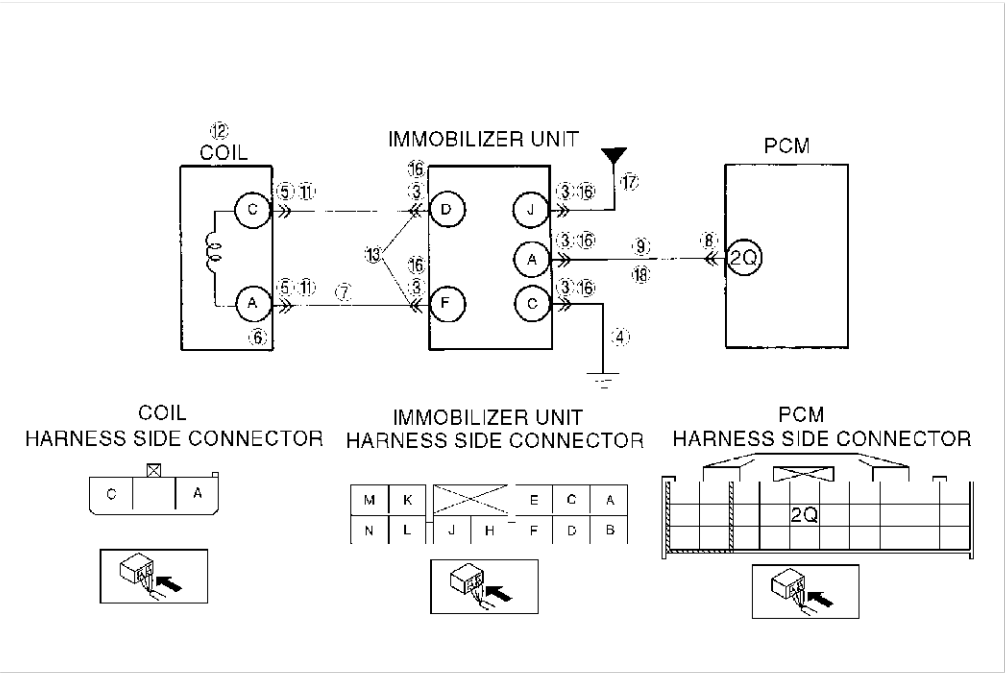

Diagnostic procedure

STEP	INSPECTION		ACTION
1	**PERFORM DTC CONFIRMATION PROCEDURE** • Perform DTC CONFIRMATION PROCEDURE. (See F3–103 DTC CONFIRMATION PROCEDURE.) • Is same DTC present?	Yes	Go to next step.
		No	Intermittent concern exists. Go to INTERMITTENT CONCERN TROUBLESHOOTING procedure. (See F3–270 INTERMITTENT CONCERN TROUBLESHOOTING.)
2	**CLASSIFY NO DTC DETECTED OR SOME DTC DETECTED** • Clear DTC from memory using WDS or equivalent. • Turn ignition key to OFF and ON (Engine OFF). • Has DTC P1624 been detected?	Yes	Go to step 10.
		No	Go to next step.
3	**INSPECT POOR CONNECTION OF IMMOBILIZER UNIT CONNECTOR** • Turn ignition key to OFF. • Disconnect immobilizer unit connector. • Inspect for poor connection (damaged, pulled-out terminals, corrosion, etc.). • Is there any malfunction?	Yes	Repair or replace terminals, then go to Step 19.
		No	Go to next step.

STEP	INSPECTION		ACTION
4	**INSPECT GROUND CIRCUIT OF IMMOBILIZER UNIT FOR OPEN CIRCUIT** • Measure resistance between immobilizer unit terminal C (harness-side) and body ground. • Is there continuity?	Yes	Go to next step.
		No	Repair or replace harness for open, then go to Step 19.
5	**INSPECT COIL TERMINAL** • Disconnect coil connector. • Inspect for bent terminals. • Is there any malfunction?	Yes	Repair or replace terminals, then go to Step 19.
		No	Go to next step.
6	**INSPECT COIL FOR SHORT CIRCUIT** • Inspect continuity between coil terminal A (part-side) and body ground. • Is there continuity?	Yes	Replace coil, then go to Step 19.
		No	Go to next step.
7	**INSPECT COIL CIRCUIT FOR SHORT** • Connect coil connector. • Inspect continuity between immobilizer unit terminal F (harness-side) and body ground. • Is there continuity?	Yes	Repair or replace harness for short circuit, then go to Step 19.
		No	Go to next step.
8	**INSPECT POOR CONNECTION OF PCM CONNECTOR** • Disconnect PCM connector. • Inspect for poor connection (damaged, pulled-out terminals, corrosion, etc.). • Is there any malfunction?	Yes	Repair or replace harness, then go to Step 19.
		No	Go to next step.
9	**INSPECT COMMUNICATION LINE FOR OPEN** • Measure continuity between immobilizer unit terminal A (harness-side) and PCM terminal 2Q. • Is there continuity?	Yes	Go to step 19.
		No	Repair or replace harness for open circuit, then go to Step 19.
10	**CLASSIFY MALFUNCTION BY ANOTHER DETECTED DTCS** • Has DTC P1602 detected?	Yes	Go to Step 14.
		No	Go to next step.
11	**INSPECT POOR CONNECTION OF COIL CONNECTOR** • Disconnect coil connector. • Inspect for poor connection (damaged, pulled-out terminals, corrosion, etc.). • Is there any malfunction?	Yes	Repair or replace harness, then go to Step 19.
		No	Go to next step.
12	**INSPECT COIL FOR OPEN** • Disconnect coil connector. • Measure resistance between coil terminals (part-side). • Is there continuity?	Yes	Go to next step.
		No	Replace coil, then go to Step 19.
13	**INSPECT COIL CIRCUIT FOR OPEN CIRCUIT** • Connect coil connector. • Measure the resistance between immobilizer connector F and D (harness-side). • Is there continuity?	Yes	Go to Step 19.
		No	Repair or replace harness for open circuit, then go to Step 19.
14	**CLASSIFY MALFUNCTION BY ANOTHER DETECTED DTCS.** • Has immobilizer unit DTC 03 been detected?	Yes	Key has not transponder, change to registered key. Then go to Step 19.
		No	Go to next step.
15	**CLASSIFY MALFUNCTION BY ANOTHER DETECTED DTCS.** • Has immobilizer unit DTC 01 detected?	Yes	Key that using for ignition is not registered. Reprogram key or using another registered key, then go to next step.
		No	Go to next step.
16	**INSPECT POOR CONNECTION OF IMMOBILIZER UNIT CONNECTOR** • Turn ignition key to OFF. • Disconnect immobilizer unit connector. • Inspect for poor connection (damaged, pulled-out terminals, corrosion, etc.). • Is there any malfunction?	Yes	Repair or replace harness, then go to next step.
		No	Go to next step.

STEP	INSPECTION		ACTION
17	**INSPECT IMMOBILIZER UNIT POWER CIRCUIT FOR OPEN CIRCUIT** • Turn ignition key to ON (Engine OFF). • Measure voltage between immobilizer connector J (harness-side) and body ground. • Is there voltage **B+**?	Yes	Go to next step.
		No	Repair or replace harness for open circuit, then go to Step 19.
18	**INSPECT COMMUNICATION LINE FOR SHORT HARNESS** • Measure resistance between immobilizer unit terminal A (harness-side) and body ground. • Is there continuity?	Yes	Repair or replace harness for short, then go to next step.
		No	Go to next step.
19	**VERIFY TROUBLESHOOTING OF DTC P1602 COMPLETED** • Make sure to reconnect all disconnected connectors. • Clear DTC from memory using WDS or equivalent. • Perform KOEO self-test. (See F3–103 KOEO/KOER SELF-TEST PROCEDURE.) • Is same DTC present?	Yes	Replace PCM, then go to next step. (See F3–81 PCM REMOVAL/INSTALLATION.)
		No	Go to next step.
20	**VERIFY AFTER REPAIR PROCEDURE** • Perform “After Repair Procedure”. (See F3–104 AFTER REPAIR PROCEDURE.) • Is there any DTC present?	Yes	Go to applicable DTC troubleshooting. (See F3–104 DTC TABLE.)
		No	Troubleshooting completed.

End Of Sie

DTC P1603

AME417001083W03

DTC P1603	Code word is not registered in PCM
DETECTION CONDITION	• Code word is not registered in PCM.
POSSIBLE CAUSE	• Immobilizer system reprogram procedure (code word) was not performed after replacing PCM.

Diagnostic procedure

STEP	INSPECTION		ACTION
1	**PERFORM DTC CONFIRMATION PROCEDURE** • Perform DTC CONFIRMATION PROCEDURE. (See F3–103 DTC CONFIRMATION PROCEDURE.) • Is same DTC present?	Yes	Perform code word reprogram procedure, then go to next step.
		No	Intermittent concern exists. Go to INTERMITTENT CONCERN TROUBLESHOOTING procedure. (See F3–270 INTERMITTENT CONCERN TROUBLESHOOTING.) Then go to next step.
2	**VERIFY TROUBLESHOOTING OF DTC P1603 COMPLETED** • Clear DTC from memory using WDS or equivalent. • Perform KOEO self-test. (See F3–103 KOEO/KOER SELF-TEST PROCEDURE.) • Is same DTC present?	Yes	Replace PCM, then go to next step. (See F3–81 PCM REMOVAL/INSTALLATION.)
		No	Go to next step.
3	**VERIFY AFTER REPAIR PROCEDURE** • Perform “After Repair Procedure”. (See F3–104 AFTER REPAIR PROCEDURE.) • Is there any DTC present?	Yes	Go to applicable DTC troubleshooting. (See F3–104 DTC TABLE.)
		No	Troubleshooting completed.

End Of Sie

DTC P1604

AME417001083W04

DTC P1604	Key ID numbers are not registered in PCM
DETECTION CONDITION	• Key ID numbers are not registered in PCM.
POSSIBLE CAUSE	• Immobilizer system reprogram procedure (key IDs) was not performed after replacing PCM.

Diagnostic procedure

STEP	INSPECTION		ACTION
1	**PERFORM DTC CONFIRMATION PROCEDURE** • Perform DTC CONFIRMATION PROCEDURE. (See F3–103 DTC CONFIRMATION PROCEDURE.) • Is same DTC present?	Yes	Perform key ID number reprogram procedure, then go to next step.
		No	Intermittent concern exists. Go to INTERMITTENT CONCERN TROUBLESHOOTING procedure. (See F3–270 INTERMITTENT CONCERN TROUBLESHOOTING.) Then go to next step.
2	**VERIFY TROUBLESHOOTING OF DTC P1604 COMPLETED** • Clear DTC from memory using WDS or equivalent. • Perform KOEO self-test. (See F3–103 KOEO/KOER SELF-TEST PROCEDURE.) • Is same DTC present?	Yes	Replace PCM, then go to next step. (See F3–81 PCM REMOVAL/INSTALLATION.)
		No	Go to next step.
3	**VERIFY AFTER REPAIR PROCEDURE** • Perform “After Repair Procedure”. (See F3–104 AFTER REPAIR PROCEDURE.) • Is there any DTC present?	Yes	Go to applicable DTC troubleshooting. (See F3–104 DTC TABLE.)
		No	Troubleshooting completed.

End Of Sta

DTC P1621

AME417001083W05

DTC P1621	Code word does not match after engine cranking
DETECTION CONDITION	• Code words stored in PCM and immobilizer unit do not match
POSSIBLE CAUSE	• Immobilizer system reprogram procedure (code word) was not performed correctly after replacing immobilizer unit or PCM.

Diagnostic procedure

STEP	INSPECTION		ACTION
1	**PERFORM DTC CONFIRMATION PROCEDURE** • Perform DTC CONFIRMATION PROCEDURE. (See F3–103 DTC CONFIRMATION PROCEDURE.) • Is same DTC present?	Yes	Perform code word reprogram procedure, go to next step.
		No	Intermittent concern exists. Go to INTERMITTENT CONCERN TROUBLESHOOTING procedure. (See F3–270 INTERMITTENT CONCERN TROUBLESHOOTING.) Then go to next step.
2	**VERIFY TROUBLESHOOTING OF DTC P1621 COMPLETED** • Clear DTC from memory using WDS or equivalent. • Perform KOEO self-test. (See F3–103 KOEO/KOER SELF-TEST PROCEDURE.) • Is same DTC present?	Yes	Replace PCM, then go to next step. (See F3–81 PCM REMOVAL/INSTALLATION.)
		No	Go to next step.
3	**VERIFY AFTER REPAIR PROCEDURE** • Perform “After Repair Procedure”. (See F3–104 AFTER REPAIR PROCEDURE.) • Is there any DTC present?	Yes	Go to applicable DTC troubleshooting. (See F3–104 DTC TABLE.)
		No	Troubleshooting completed.

End Of Sta

DTC P1622

AME417001083W06

DTC P1622	Key ID number does not match
DETECTION CONDITION	• ID numbers stored in immobilizer unit (IU) and PCM do not match. This DTC is indicated only after immobilizer unit is replaced and reprogramming of system.
POSSIBLE CAUSE	• Transformation of key ID number stored in PCM.

Diagnostic procedure

STEP	INSPECTION		ACTION
1	**PERFORM DTC CONFIRMATION PROCEDURE** • Perform DTC CONFIRMATION PROCEDURE. (See F3–103 DTC CONFIRMATION PROCEDURE.) • Is same DTC present?	Yes	Go to next step.
		No	Intermittent concern exists. Go to INTERMITTENT CONCERN TROUBLESHOOTING procedure. (See F3–270 INTERMITTENT CONCERN TROUBLESHOOTING.) Then go to Step 3.
2	**CHECK ENGINE IS STARTING NORMALLY USING ANOTHER REGISTERED KEY** • Does engine start with another registered key?	Yes	Previous key is defective. Discard it.
		No	Go to next step.
3	**VERIFY TROUBLESHOOTING OF DTC P1622 COMPLETED** • Clear DTC from memory using WDS or equivalent. • Perform KOEO self-test. (See F3–103 KOEO/KOER SELF-TEST PROCEDURE.) • Is same DTC present?	Yes	Replace PCM, then go to next step. (See F3–81 PCM REMOVAL/INSTALLATION.)
		No	Go to next step.
4	**VERIFY AFTER REPAIR PROCEDURE** • Perform “After Repair Procedure”. (See F3–104 AFTER REPAIR PROCEDURE.) • Is there any DTC present?	Yes	Go to applicable DTC troubleshooting. (See F3–104 DTC TABLE.)
		No	Troubleshooting completed.

End Of Sie

DTC P1623

AME417001083W07

DTC P1623	Code word or key ID number read/write error in PCM
DETECTION CONDITION	• PCM internal EEPROM damaged.
POSSIBLE CAUSE	• PCM internal EEPROM damaged.

Diagnostic procedure

STEP	INSPECTION		ACTION
1	**PERFORM DTC CONFIRMATION PROCEDURE** • Perform DTC CONFIRMATION PROCEDURE. (See F3–103 DTC CONFIRMATION PROCEDURE.) • Is same DTC present?	Yes	Go to next step.
		No	Intermittent concern exists. Go to INTERMITTENT CONCERN TROUBLESHOOTING procedure. (See F3–270 INTERMITTENT CONCERN TROUBLESHOOTING.) Then go to next step.
2	**VERIFY DTC P1623 DETECTED AGAIN** • Clear DTC from memory using WDS or equivalent. • Perform KOEO self-test. (See F3–103 KOEO/KOER SELF-TEST PROCEDURE.) • Is same DTC present?	Yes	Replace PCM, then go to next step. (See F3–81 PCM REMOVAL/INSTALLATION.)
		No	Go to next step.
3	**VERIFY AFTER REPAIR PROCEDURE** • Perform “After Repair Procedure”. (See F3–104 AFTER REPAIR PROCEDURE.) • Is there any DTC present?	Yes	Go to applicable DTC troubleshooting. (See F3–104 DTC TABLE.)
		No	Troubleshooting completed.

End Of Sie

DTC P1624

AME417001083W08

DTC P1624	Immobilizer system communication counter = 0
DETECTION CONDITION	• PCM detected immobilizer system communication malfunction more than three times
POSSIBLE CAUSE	• More than three attempts to start engine made under malfunction. • Code word mismatch

Diagnostic procedure

STEP	INSPECTION		ACTION
1	**PERFORM DTC CONFIRMATION PROCEDURE** • Perform DTC CONFIRMATION PROCEDURE. (See F3–103 DTC CONFIRMATION PROCEDURE.) • Is same DTC present?	Yes	Go to next step.
		No	Intermittent concern exists. Go to INTERMITTENT CONCERN TROUBLESHOOTING procedure. (See F3–270 INTERMITTENT CONCERN TROUBLESHOOTING.) Then go to next step.
2	**FOLLOW OTHER DETECTED DTC FIRST** • Turn ignition key to OFF and to START. • Has P1602 been detected?	Yes	Go to DTC P1602 inspection. (See F3–202 DTC P1602.)
		No	Go to next step.
3	**INSPECT POOR CONNECTION OF IMMOBILIZER UNIT CONNECTOR** • Has P1621 been detected?	Yes	Go to DTC P1621 inspection. (See F3–205 DTC P1621.)
		No	Go to next step.
4	**VERIFY TROUBLESHOOTING OF DTC P1624 COMPLETED** • Make sure to reconnect all disconnected connectors. • Clear DTC from memory using WDS or equivalent. • Perform KOEO self-test. (See F3–103 KOEO/KOER SELF-TEST PROCEDURE.) • Is same DTC present?	Yes	Replace PCM, then go to next step. (See F3–81 PCM REMOVAL/INSTALLATION.)
		No	Go to next step.
5	**VERIFY AFTER REPAIR PROCEDURE** • Perform “After Repair Procedure”. (See F3–104 AFTER REPAIR PROCEDURE.) • Is there any DTC present?	Yes	Go to applicable DTC troubleshooting. (See F3–104 DTC TABLE.)
		No	Troubleshooting completed.

End Of Ste

DTC P2006

AME417001083W09

DTC P2006	VTCS shutter valve stuck closed
DETECTION CONDITION	• PCM monitors mass air amount. If actual air flow amount is below estimated air flow amount when the following monitoring conditions are met. PCM determines that VTCS shutter valve is stuck closed. **MONITORING CONDITIONS** — Engine speed is **above 3,750 rpm**. — Engine coolant temperature is **above 70 °C {158 °F}**. — Throttle valve opening angle is above threshold*. *: Maximum calculated load valve varies depending on engine speed **Diagnostic support note** • This is a continuous monitor (CCM). • MIL illuminates if PCM detects the above malfunction condition in two consecutive drive cycles or in one drive cycle while the DTC for the same malfunction has been stored in the PCM. • PENDING CODE is available if PCM detects the above malfunction condition during first drive cycle. • FREEZE FRAME DATA is available. • DTC is stored in PCM memory.
POSSIBLE CAUSE	• ECT sensor malfunction • MAF sensor malfunction • IAT sensor malfunction • EGR boost sensor malfunction • TP sensor malfunction • CKP sensor malfunction • Variable tumble control solenoid valve malfunction • VTCS shutter valve malfunction (stuck closed) • VTCS shutter valve actuator malfunction (stuck closed). • Short to ground circuit between variable tumble control solenoid valve terminal B and PCM terminal 4T • PCM malfunction
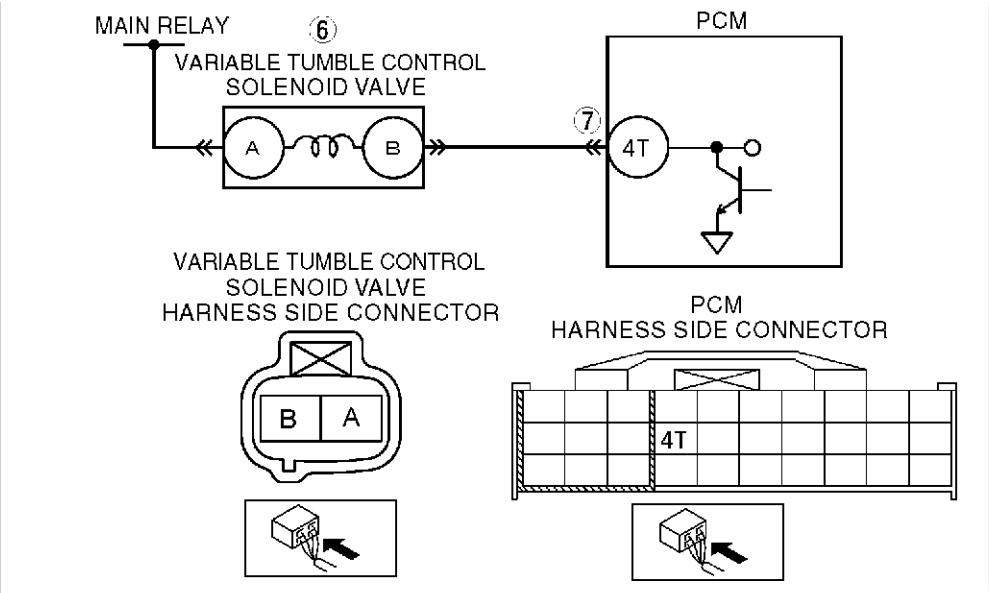	

Diagnostic procedure

STEP	INSPECTION		ACTION
1	**VERIFY FREEZE FRAME DATA HAS BEEN RECORDED** • Has FREEZE FRAME DATA been recorded?	Yes	Go to next step.
		No	Record FREEZE FRAME DATA on repair order, then go to next step.

STEP	INSPECTION		ACTION
2	**VERIFY RELATED SERVICE INFORMATION AVAILABILITY** • Check for related Service Information availability. • Is any related Service Information available?	Yes	Perform repair or diagnosis according to available Service Information. • If vehicle is not repaired, go to next step.
		No	Go to next step.
3	**CLASSIFY INTERMITTENT CONCERN OR CONTINUOUS CONCERN** • Clear DTC from PCM memory using WDS or equipment. • Drive vehicle under following conditions: — Engine speed: **below 3,500 rpm** — Throttle opening angle is as follows: • Below 1,500 rpm: **35%** • Between 1,500 — 2,500 rpm: **25—35%** • Above 2,500 rpm: **25%** • Is PENDING CODE of same DTC present?	Yes	Go to next step.
		No	Intermittent concern exists. Go to INTERMITTENT CONCERN TROUBLESHOOTING procedure. (See F3–270 INTERMITTENT CONCERN TROUBLESHOOTING.)
4	**VERIFY STORED OTHER DTCS** • Verify stored DTCs using WDS or equipment. • Is any other DTC present except P1512?	Yes	Go to appropriate DTC troubleshooting procedures.
		No	Go to next step.
5	**INSPECT VTCS SHUTTER VALVE ACTUATOR** • Carry out “variable tumble control operation inspection” (See F3–273 Variable Tumble Control System (VTCS) Operation Inspection.) • Is VTCS shutter valve actuator okay?	Yes	Go to next step.
		No	Replace VTCS shutter valve actuator, then go to Step 8.
6	**INSPECT VARIABLE TUMBLE CONTROL SOLENOID VALVE** • Carry out “variable tumble control solenoid valve airflow inspection” (See F3–54 VARIABLE TUMBLE CONTROL SOLENOID VALVE INSPECTION.) • Is variable tumble control solenoid valve okay?	Yes	Go to next step.
		No	Replace variable tumble control solenoid valve, then go to Step 8.
7	**INSPECT PCM FOR POOR CONNECTION** • Inspect for poor connection at PCM terminal 4T (damaged/pulled-out terminals, corrosion, etc.). • Is there any malfunction?	Yes	Repair terminal, then go to next step.
		No	Go to next step.
8	**VERIFY TROUBLESHOOTING OF DTC P2006 COMPLETED** • Make sure to reconnect all disconnected connectors. • Start engine. • Clear DTC from PCM memory using WDS or equipment. • Start engine. • Drive vehicle under following conditions: — Engine speed: **below 3,500 rpm** — Throttle opening angle is as follows: • Below 1,500 rpm: **35%** • Between 1,500 — 2,500 rpm: **25—35%** • Above 2,500 rpm: **25%** • Is PENDING CODE of same DTC present?	Yes	Replace PCM, then go to next step. (See F3–81 PCM REMOVAL/INSTALLATION.)
		No	Go to next step.
9	**VERIFY AFTER REPAIR PROCEDURE** • Perform “After Repair Procedure”. (See F3–104 AFTER REPAIR PROCEDURE.) • Is there any DTC present?	Yes	Go to applicable DTC troubleshooting. (See F3–104 DTC TABLE.)
		No	Troubleshooting completed.

End Of Step

DTC P2009

AME417001083W10

DTC P2009	Variable tumble control solenoid valve circuit low input
DETECTION CONDITION	• PCM monitors variable tumble control solenoid valve control signal at PCM terminal 4T. If PCM turns variable tumble control solenoid valve off but voltage at PCM terminal 4T still remains low, PCM determines that variable tumble control solenoid valve circuit has malfunction. **Diagnostic support note** • This is a continuous monitor (CCM). • MIL illuminates if PCM detects the above malfunction condition in two consecutive drive cycles or in one drive cycle while the DTC for the same malfunction has been stored in the PCM. • PENDING CODE is available if PCM detects the above malfunction condition during first drive cycle. • FREEZE FRAME DATA is available. • DTC is stored in PCM memory.
POSSIBLE CAUSE	• Poor connection of connectors at PCM and/or variable tumble control solenoid valve • Short to ground in wiring between variable tumble control solenoid valve terminal B and PCM terminal 4T • Open circuit in wiring between main relay and variable tumble control solenoid valve terminal A • Open circuit in wiring between variable tumble control solenoid valve terminal B and PCM terminal 4T • Variable tumble control solenoid valve malfunction • PCM malfunction

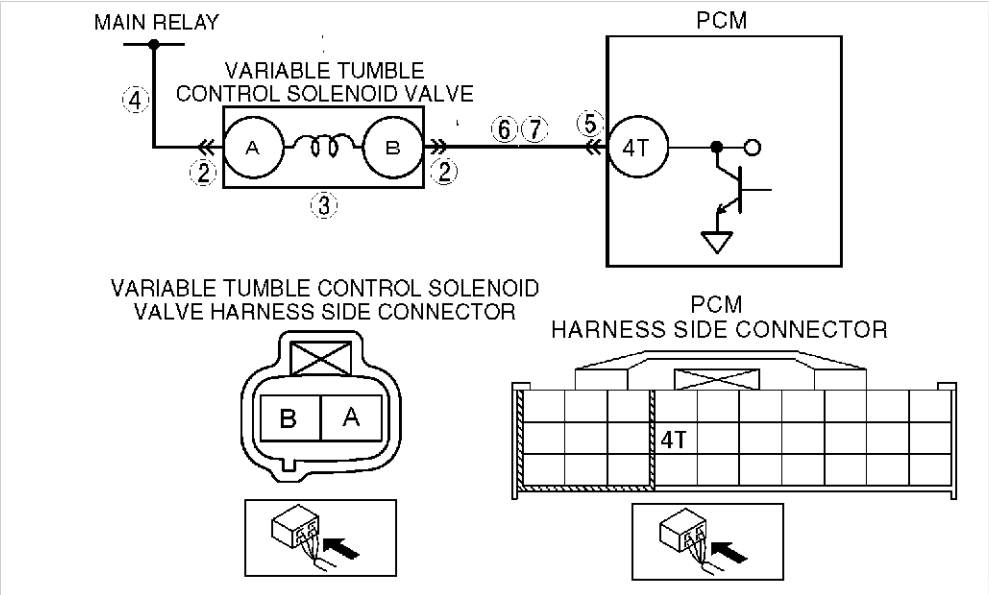

Diagnostic procedure

STEP	INSPECTION		ACTION
1	**PERFORM DTC CONFIRMATION PROCEDURE** • Perform DTC CONFIRMATION PROCEDURE. (See F3–103 DTC CONFIRMATION PROCEDURE.) • Is same DTC present?	Yes	Go to next step.
		No	Intermittent concern exists. Go to INTERMITTENT CONCERN TROUBLESHOOTING procedure. (See F3–270 INTERMITTENT CONCERN TROUBLESHOOTING.)
2	**INSPECT VARIABLE TUMBLE CONTROL SOLENOID VALVE CONNECTOR FOR POOR CONNECTION** • Turn ignition key to OFF. • Inspect for poor connection (damaged/pulled-out pins, corrosion, etc.). • Is there any malfunction?	Yes	Repair or replace terminal, then go to Step 8.
		No	Go to next step.

STEP	INSPECTION		ACTION
3	**INSPECT VARIABLE TUMBLE CONTROL SOLENOID VALVE** • Perform variable tumble control solenoid valve inspection. (See F3–54 VARIABLE TUMBLE CONTROL SOLENOID VALVE INSPECTION.) • Is variable tumble control solenoid valve okay?	Yes	Go to next step.
		No	Replace variable tumble control solenoid valve, then go to Step 8.
4	**INSPECT VARIABLE TUMBLE CONTROL SOLENOID VALVE POWER SUPPLY CIRCUIT FOR OPEN CIRCUIT** • Disconnect variable tumble control solenoid valve connector. • Turn ignition key to ON (Engine OFF). • Measure voltage between variable tumble control solenoid valve terminal A (harness-side) and body ground. • Is voltage **B+**?	Yes	Go to next step.
		No	Repair or replace harness for open, then go to Step 8.
5	**INSPECT PCM CONNECTOR FOR POOR CONNECTION** • Turn ignition key to OFF. • Disconnect PCM connector. • Inspect for poor connection at PCM terminal 4T. (damaged/pulled-out pins, corrosion, etc.). • Is there any malfunction?	Yes	Repair terminal, then go to Step 8.
		No	Go to next step.
6	**INSPECT VARIABLE TUMBLE CONTROL SOLENOID VALVE CONTROL CIRCUIT FOR SHORT TO GROUND** • Inspect continuity between variable tumble control solenoid valve terminal B (harness-side) and body ground. • Is there continuity?	Yes	Repair or replace harness for short to ground, then go to Step 8.
		No	Go to next step.
7	**INSPECT VARIABLE TUMBLE CONTROL SOLENOID VALVE CONTROL CIRCUIT FOR OPEN CIRCUIT** • Connect variable tumble control solenoid valve connector. • Turn ignition key to ON (Engine OFF). • Measure voltage between PCM terminal 4T (harness side) and body ground. • Is voltage **B+**?	Yes	Go to next step.
		No	Repair or replace harness for open or short to ground circuit, then go to next step.
8	**VERIFY TROUBLESHOOTING OF DTC P2009 COMPLETED** • Make sure to reconnect all disconnected connectors. • Clear DTC from PCM memory using WDS or equipment. • Perform KOEO/KOER self-test. (See F3–103 KOEO/KOER SELF-TEST PROCEDURE.) • Is same DTC present?	Yes	Replace PCM, then go to next step. (See F3–81 PCM REMOVAL/INSTALLATION.)
		No	Go to next step.
9	**VERIFY AFTER REPAIR PROCEDURE** • Perform “After Repair Procedure”. (See F3–104 AFTER REPAIR PROCEDURE.) • Is there any DTC present?	Yes	Go to applicable DTC troubleshooting. (See F3–104 DTC TABLE.)
		No	Troubleshooting completed.

End Of Ste

DTC P2010

AME417001083W11

DTC P2010	Variable tumble control solenoid valve circuit high input
DETECTION CONDITION	• PCM monitors variable tumble control solenoid valve control signal at PCM terminal 4T. If PCM turns variable tumble control solenoid valve on but voltage at PCM terminal 4T still remains high, PCM determines that variable tumble control solenoid valve circuit has malfunction. **Diagnostic support note** • This is a continuous monitor (CCM). • MIL illuminates if PCM detects the above malfunction condition in two consecutive drive cycles or in one drive cycle while the DTC for the same malfunction has been stored in the PCM. • PENDING CODE is available if PCM detects the above malfunction condition during first drive cycle. • FREEZE FRAME DATA is available. • DTC is stored in PCM memory.
POSSIBLE CAUSE	• Poor connection of connectors at PCM and/or variable tumble control solenoid valve • Short to power circuit in wiring between variable tumble control solenoid valve terminal B and PCM terminal 4T • Variable tumble control solenoid valve malfunction • PCM malfunction

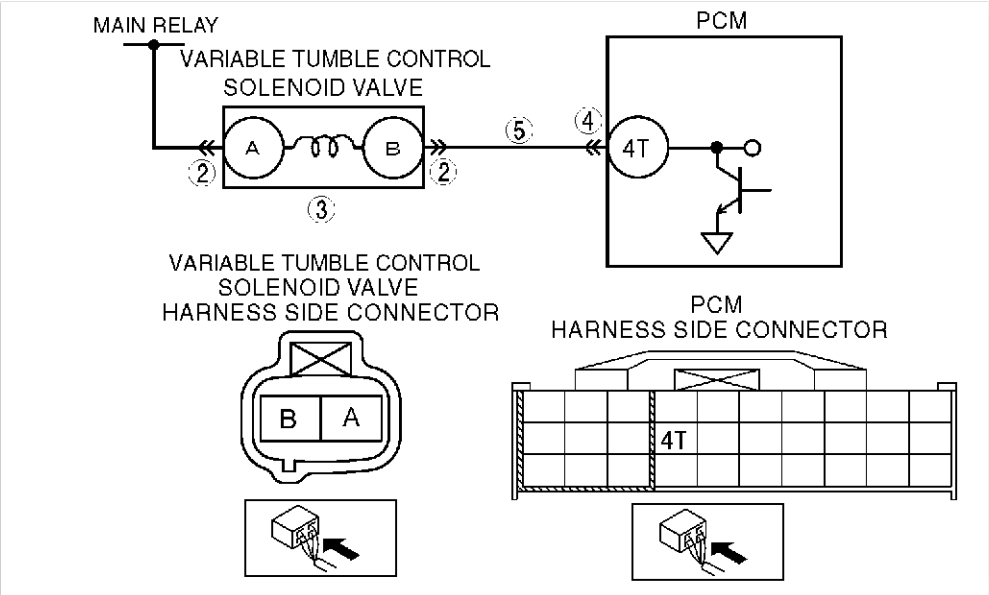

Diagnostic procedure

STEP	INSPECTION		ACTION
1	**PERFORM DTC CONFIRMATION PROCEDURE** • Perform DTC CONFIRMATION PROCEDURE. (See F3–103 DTC CONFIRMATION PROCEDURE.) • Is same DTC present?	Yes	Go to next step.
		No	Intermittent concern exists. Go to INTERMITTENT CONCERN TROUBLESHOOTING procedure. (See F3–270 INTERMITTENT CONCERN TROUBLESHOOTING.)

STEP	INSPECTION		ACTION
2	**INSPECT POOR CONNECTION OF VARIABLE TUMBLE CONTROL SOLENOID VALVE CONNECTOR** • Turn ignition key to OFF. • Inspect for poor connection (damaged/pulled-out pins, corrosion, etc.). • Is there malfunction?	Yes	Repair or replace terminal, then go to Step 6.
		No	Go to next step.
3	**INSPECT VARIABLE TUMBLE CONTROL SOLENOID VALVE** • Perform variable tumble control solenoid valve inspection. (See F3–54 VARIABLE TUMBLE CONTROL SOLENOID VALVE INSPECTION.) • Is variable tumble control solenoid valve okay?	Yes	Go to next step.
		No	Replace variable tumble control solenoid valve, then go to Step 6.
4	**INSPECT PCM CONNECTOR FOR POOR CONNECTION** • Turn ignition key to OFF. • Disconnect PCM connector. • Inspect for poor connection at PCM terminal 4T. (damaged/pulled-out pins, corrosion, etc.). • Is there any malfunction?	Yes	Repair terminal, then go to Step 6.
		No	Go to next step.
5	**INSPECT VARIABLE TUMBLE CONTROL SOLENOID VALVE CONTROL CIRCUIT FOR SHORT TO POWER** • Remove variable tumble control solenoid valve. • Turn ignition key to ON (Engine OFF). • Measure voltage between PCM terminal 4T and body ground. • Is voltage **B+**?	Yes	Repair or replace harness for short to power circuit, then go to next step.
		No	Go to next step.
6	**VERIFY TROUBLESHOOTING OF DTC P2010 COMPLETED** • Make sure to reconnect all disconnected connectors. • Clear DTC from PCM memory using WDS or equipment. • Perform KOEO/KOER self-test. (See F3–103 KOEO/KOER SELF-TEST PROCEDURE.) • Is PENDING CODE of same DTC present?	Yes	Replace PCM, then go to next step. (See F3–81 PCM REMOVAL/INSTALLATION.)
		No	Go to next step.
7	**VERIFY AFTER REPAIR PROCEDURE** • Perform “After Repair Procedure”. (See F3–104 AFTER REPAIR PROCEDURE.) • Is there any DTC present?	Yes	Go to applicable DTC troubleshooting. (See F3–104 DTC TABLE.)
		No	Troubleshooting completed.

End Of Ste

DTC P2228

AME417001083W12

DTC P2228	BARO sensor circuit low input
DETECTION CONDITION	• PCM monitors input voltage from BARO sensor. If input voltage at PCM terminal 1G is **below 0.36 V**, PCM determines that BARO sensor circuit has malfunction. **Diagnostic support note** • This is a continuous monitor (CCM). • MIL illuminates if PCM detects the above malfunction condition during first drive cycle. • PENDING CODE is available if PCM detects the above malfunction condition. • FREEZE FRAME DATA is available. • DTC is stored in PCM memory.
POSSIBLE CAUSE	• BARO sensor malfunction • Connector or terminal malfunction • Short to ground in wiring between BARO sensor terminal A and PCM terminal 1G • Open circuit in wiring between BARO sensor terminal C and PCM terminal 2K • PCM malfunction

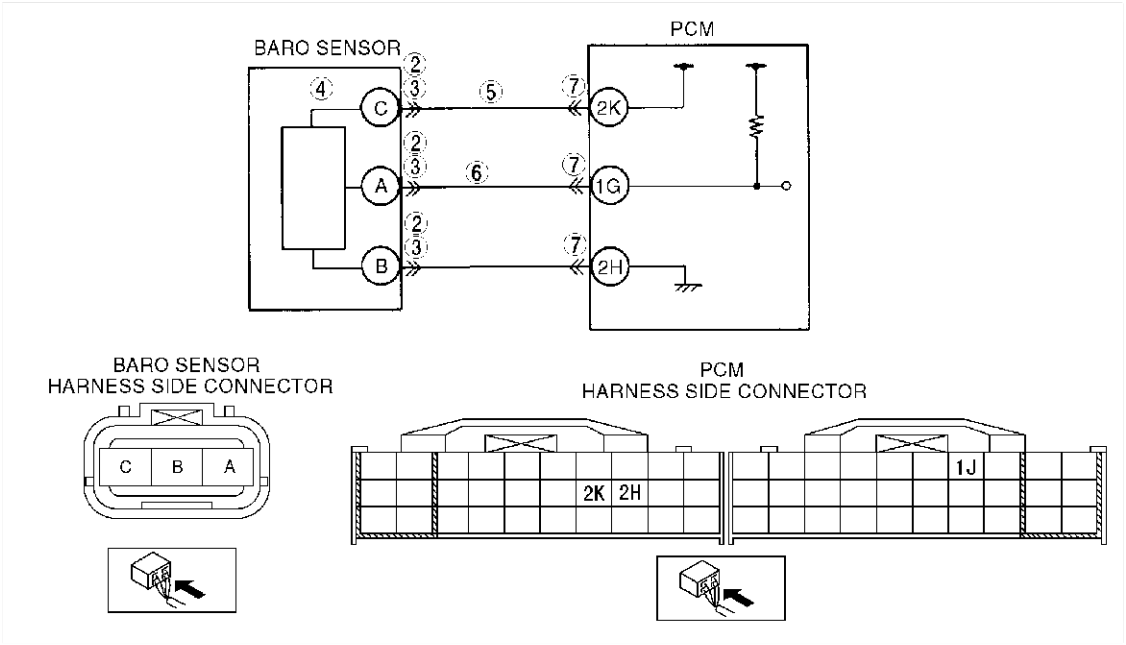

Diagnostic procedure

STEP	INSPECTION		ACTION
1	**PERFORM DTC CONFIRMATION PROCEDURE** • Perform DTC CONFIRMATION PROCEDURE. (See F3–103 DTC CONFIRMATION PROCEDURE.) • Is same DTC present?	Yes	Go to next step.
		No	Intermittent concern exists. Go to INTERMITTENT CONCERN TROUBLESHOOTING procedure. (See F3–270 INTERMITTENT CONCERN TROUBLESHOOTING.)
2	**INSPECT CONNECTION OF BARO SENSOR CONNECTOR** • Turn ignition key to OFF. • Verify that BARO sensor connector is connected securely. • Is connection okay?	Yes	Go to next step.
		No	Reconnect the connector, then go to Step 8.

STEP	INSPECTION		ACTION
3	**INSPECT BARO SENSOR CONNECTOR FOR POOR CONNECTION** • Disconnect the BARO sensor connector. • Inspect for poor connection (damaged/pulled-out pins, corrosion, etc.). • Is there any malfunction?	Yes	Repair or replace suspected terminal, then go to Step 8.
		No	Go to next step.
4	**INSPECT BARO SENSOR MALFUNCTION** • Perform BARO sensor inspection. (See F3–97 BAROMETRIC PRESSURE (BARO) SENSOR INSPECTION.) • Is BARO sensor okay?	Yes	Go to next step.
		No	Replace BARO sensor, then go to Step 8.
5	**CHECK POWER SUPPLY CIRCUIT VOLTAGE AT BARO SENSOR CONNECTOR** **Note** • If DTCs P0107 and P0122 are also retrieved with P2228, go to REFERENCE VOLTAGE troubleshooting procedure. • Measure voltage between BARO sensor terminal C (harness-side) and body ground. • Is voltage **within 4.5—5.5 V?**	Yes	Go to next step.
		No	Check for open circuit between PCM terminal 2K (harness-side) and BARO sensor terminal C (harness-side). Repair or replace suspected harness, then go to Step 8.
6	**INSPECT BARO SENSOR SIGNAL CIRCUIT FOR SHORT TO GROUND** • Turn ignition key to OFF. • Disconnect PCM connector. • Inspect for continuity between BARO sensor terminal A (harness-side) and body ground. • Is there continuity?	Yes	Repair or replace suspected harness, then go to Step 8.
		No	Go to next step.
7	**INSPECT PCM CONNECTOR FOR POOR CONNECTION** • Disconnect PCM connector. • Inspect for poor connection at terminal 2H (damaged/pulled-out pins, corrosion, etc.). • Is there any malfunction?	Yes	Repair terminal, then go to Step 8.
		No	Go to next step.
8	**VERIFY TROUBLESHOOTING OF DTC P2228 COMPLETED** • Make sure to reconnect all disconnected connectors. • Turn ignition key to ON (Engine OFF). • Clear DTC from memory using WDS or equivalent. • Perform KOEO/KOER self-test. (See F3–103 KOEO/KOER SELF-TEST PROCEDURE.) • Is same DTC present?	Yes	Replace PCM, then go to next step. (See F3–81 PCM REMOVAL/INSTALLATION.)
		No	No concern is detected. Go to next step.
9	**VERIFY AFTER REPAIR PROCEDURE** • Perform “After Repair Procedure”. (See F3–104 AFTER REPAIR PROCEDURE.) • Is there any DTC present?	Yes	Go to applicable DTC troubleshooting. (See F3–104 DTC TABLE.)
		No	Troubleshooting completed.

End Of Ste

DTC P2229

AME417001083W13

DTC P2229	BARO sensor circuit high input
DETECTION CONDITION	• PCM monitors input voltage from BARO sensor. If input voltage at PCM terminal 1G is **above 4.92 V**, PCM determines that BARO sensor circuit has malfunction. **Diagnostic support note** • This is a continuous monitor (CCM). • MIL illuminates if PCM detects the above malfunction condition during first drive cycle. • PENDING CODE is available if PCM detects the above malfunction condition. • FREEZE FRAME DATA is available. • DTC is stored in PCM memory.
POSSIBLE CAUSE	• BARO sensor malfunction • Connector or terminal malfunction • Open circuit in wiring between BARO sensor terminal A and PCM terminal 1G • BARO sensor signal circuit is shorted to reference voltage supply circuit. • PCM malfunction

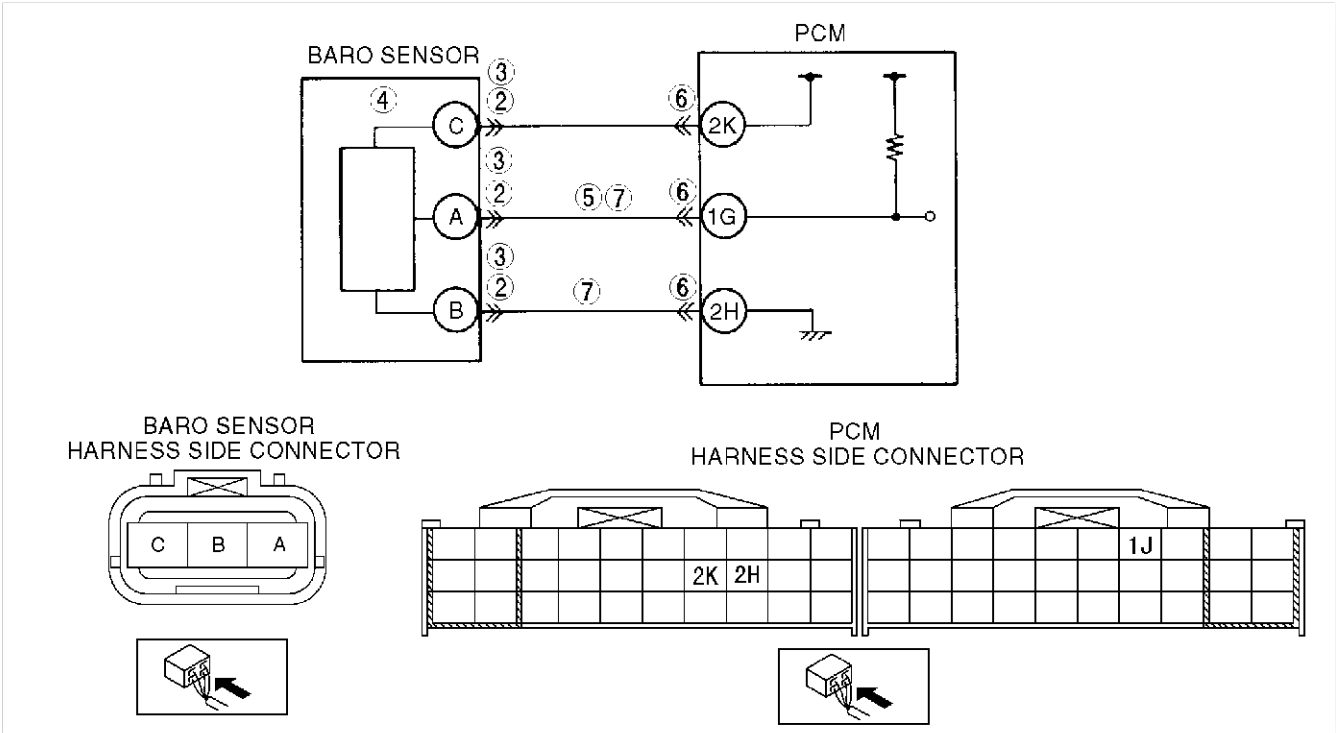

Diagnostic procedure

STEP	INSPECTION		ACTION
1	**PERFORM DTC CONFIRMATION PROCEDURE** • Perform DTC CONFIRMATION PROCEDURE. (See F3–103 DTC CONFIRMATION PROCEDURE.) • Is same DTC present?	Yes	Go to next step.
		No	Intermittent concern exists. Go to INTERMITTENT CONCERN TROUBLESHOOTING procedure. (See F3–270 INTERMITTENT CONCERN TROUBLESHOOTING.)

STEP	INSPECTION		ACTION
2	**INSPECT CONNECTION OF BARO SENSOR CONNECTOR** • Turn ignition key to OFF. • Verify that BARO sensor connector is connected securely. • Is connection okay?	Yes	Go to next step.
		No	Reconnect the connector, then go to Step 8.
3	**INSPECT BARO SENSOR CONNECTOR FOR POOR CONNECTION** • Disconnect the BARO sensor connector. • Inspect for poor connection (damaged/pulled-out pins, corrosion, etc.). • Is there any malfunction?	Yes	Repair or replace suspected terminal, then go to Step 8.
		No	Go to next step.
4	**INSPECT BARO SENSOR MALFUNCTION** • Perform BARO sensor inspection. (See F3–97 BAROMETRIC PRESSURE (BARO) SENSOR INSPECTION.) • Is BARO sensor okay?	Yes	Go to next step.
		No	Replace BARO sensor, then go to Step 8.
5	**VERIFY BARO SENSOR SIGNAL CIRCUIT FOR SHORT TO REFERENCE VOLTAGE CIRCUIT** • Measure voltage between BARO sensor terminal B and body ground. • Is voltage **above 4.92 V?**	Yes	Repair or replace short to power harness, then go to Step 8.
		No	Go to next step.
6	**INSPECT PCM CONNECTOR FOR POOR CONNECTION** • Disconnect PCM connector. • Inspect for poor connection at terminal 2H (damaged/pulled-out pins, corrosion, etc.). • Is there any malfunction?	Yes	Repair terminal, then go to Step 8.
		No	Go to next step.
7	**VERIFY BARO SENSOR GROUND CIRCUIT FOR OPEN CIRCUIT** • Inspect for continuity following between BARO sensor PCM terminal. — BARO sensor terminal A and PCM terminal 1G — BARO sensor terminal B and PCM terminal 2H • Is there continuity?	Yes	Go to next step.
		No	Repair or replace open harness, then go to Step 8.
8	**VERIFY TROUBLESHOOTING OF DTC P2229 COMPLETED** • Make sure to reconnect all disconnected connectors. • Turn ignition key to ON (Engine OFF). • Clear DTC from memory using WDS or equivalent. • Perform KOEO/KOER self-test. (See F3–103 KOEO/KOER SELF-TEST PROCEDURE.) • Is same DTC present?	Yes	Replace PCM, then go to next step. (See F3–81 PCM REMOVAL/INSTALLATION.)
		No	No concern is detected. Go to next step.
9	**VERIFY AFTER REPAIR PROCEDURE** • Perform “After Repair Procedure”. (See F3–104 AFTER REPAIR PROCEDURE.) • Is there any DTC present?	Yes	Go to applicable DTC troubleshooting. (See F3–104 DTC TABLE.)
		No	Troubleshooting completed.

End Of Ste

DTC P2502

AME417001083W14

DTC P2502	Generator terminal B circuit open
DETECTION CONDITION	• PCM judges generator output voltage is **above 17.0 V** or battery voltage is **below 11.0 V**.
POSSIBLE CAUSE	• Open circuit between generator terminal B and battery positive terminal • Battery malfunction • Generator malfunction • PCM is poorly connected. • PCM, generator and/or battery are poorly connected

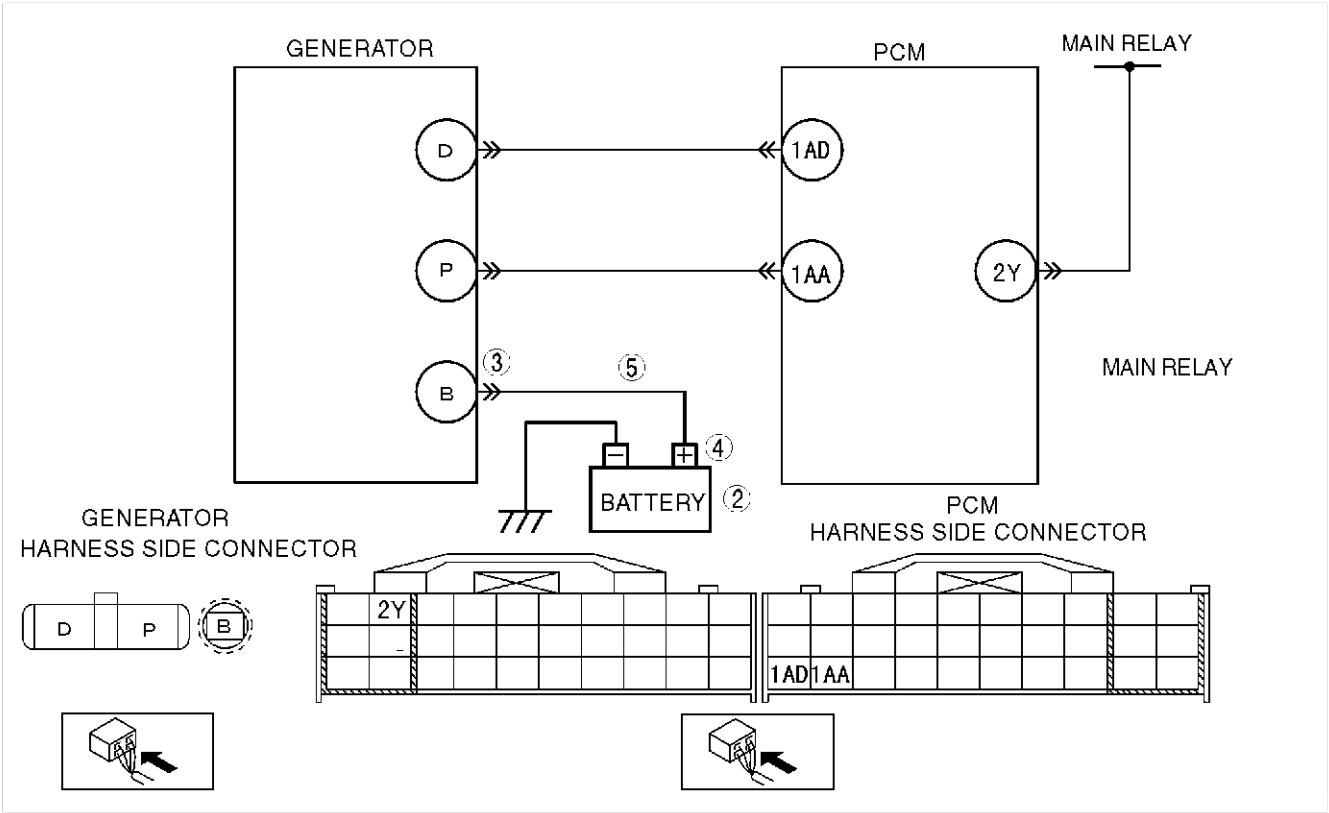

Diagnostic procedure

STEP	INSPECTION		ACTION
1	**PERFORM DTC CONFIRMATION PROCEDURE** • Perform DTC CONFIRMATION PROCEDURE. (See F3–103 DTC CONFIRMATION PROCEDURE.) • Is same DTC present?	Yes	Go to next step.
		No	Intermittent concern exists. Go to INTERMITTENT CONCERN TROUBLESHOOTING procedure. (See F3–270 INTERMITTENT CONCERN TROUBLESHOOTING.)
2	**INSPECT BATTERY** • Turn ignition key to OFF. • Inspect battery. • Is battery okay?	Yes	Replace battery, then go to Step 6.
		No	Go to next step.
3	**INSPECT POOR INSTALLATION OF GENERATOR TERMINAL** • Turn ignition key to OFF. • Inspect for looseness of generator terminal B installation nut. • Is nut loose?	Yes	Tighten generator terminal B installation nut, then go to Step 6.
		No	Go to next step.
4	**INSPECT POOR INSTALLATION OF BATTERY POSITIVE TERMINAL** • Inspect for looseness of battery positive terminal. • Is terminal loose?	Yes	Connect battery positive terminal correctly, then go to Step 6.
		No	Go to next step.
5	**INSPECT BATTERY CHARGING CIRCUIT** • Start engine. • Disconnect battery positive terminal. • Does engine stall?	Yes	Repair or replace harness between generator terminal B and battery positive terminal, then go to next step.
		No	Go to next step.
6	**VERIFY TROUBLESHOOTING OF DTC P2502 COMPLETED** • Make sure to reconnect all connectors. • Clear DTC from memory using WDS or equivalent. • Perform KOER self-test. (See F3–103 KOEO/KOER SELF-TEST PROCEDURE.) • Is the same DTC present?	Yes	Replace PCM, then go to next step. (See F3–81 PCM REMOVAL/INSTALLATION.)
		No	Go to next step.
7	**VERIFY AFTER REPAIR PROCEDURE** • Perform “After Repair Procedure”. (See F3–104 AFTER REPAIR PROCEDURE.) • Is there any DTC present?	Yes	Go to applicable DTC troubleshooting. (See F3–104 DTC TABLE.)
		No	Troubleshooting completed.

End Of Ste

DTC P2503

AME417001083W15

DTC P2503	Generator output voltage signal no electricity
DETECTION CONDITION	• PCM needs **more than 20 A** from generator, and judges generator output voltage to be **below 8.5 V** when engine is running.
POSSIBLE CAUSE	• Generator malfunction • PCM and/or generator are poorly connected. • Open and/or short to GND in wiring from between generator terminal P and PCM terminal 1AA • Open and/or short to GND in wiring from between generator terminal D and PCM terminal 1AD • Drive belt misadjustment

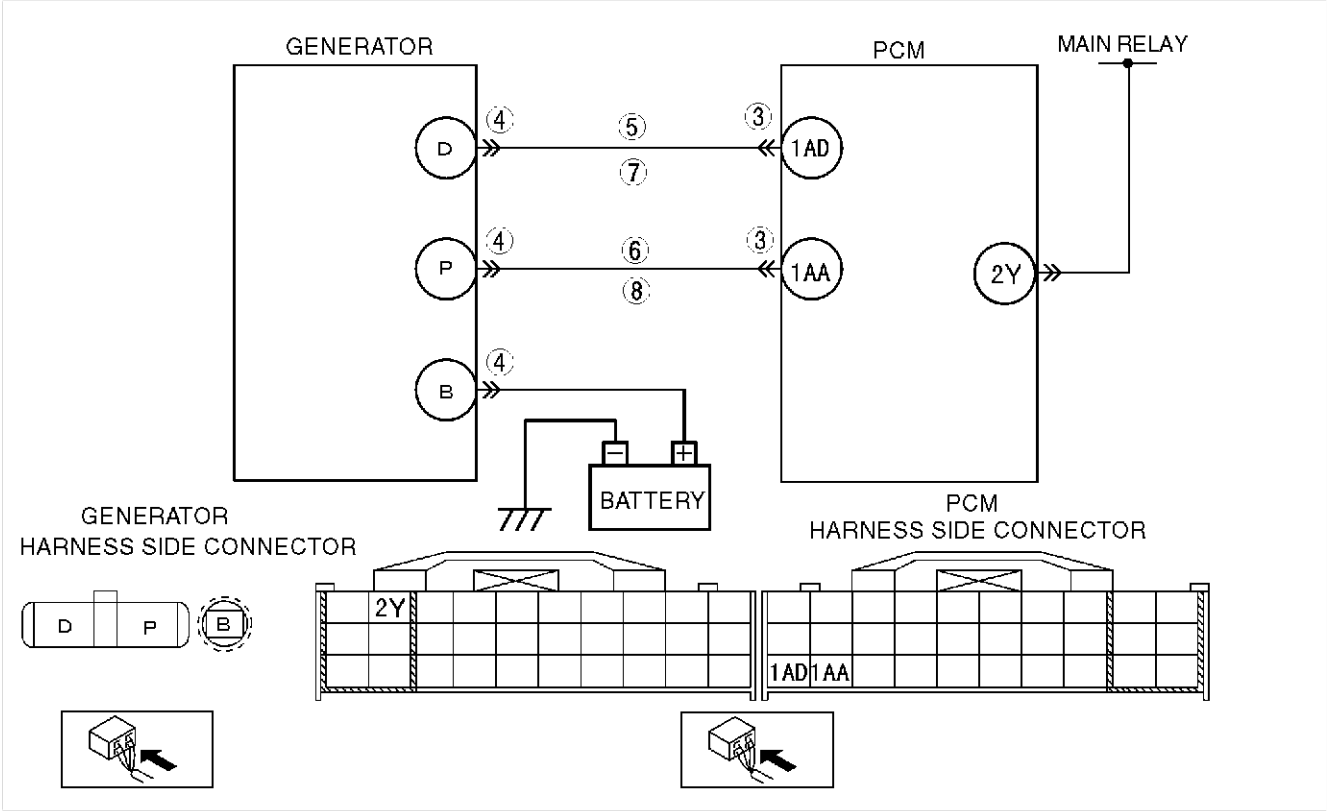

Diagnostic procedure

STEP	INSPECTION		ACTION
1	**PERFORM DTC CONFIRMATION PROCEDURE** • Perform DTC CONFIRMATION PROCEDURE. (See F3–103 DTC CONFIRMATION PROCEDURE.) • Is same DTC present?	Yes	Go to next step.
		No	Intermittent concern exists. Go to INTERMITTENT CONCERN TROUBLESHOOTING procedure. (See F3–270 INTERMITTENT CONCERN TROUBLESHOOTING.)
2	**INSPECT DRIVE BELT CONDITION** • Verify that drive belt auto tensioner indicator mark does not exceed limit. • Is front drive belt okay?	Yes	Go to next step.
		No	Replace and/or adjust drive belt, then go to Step 9.

STEP	INSPECTION		ACTION
3	**INSPECT POOR CONNECTION OF PCM CONNECTOR** • Turn ignition key to OFF. • Disconnect PCM connector. • Inspect for poor connection (damaged, pulled-out terminals, corrosion, etc.). • Is there any malfunction?	Yes	Repair terminals, then go to Step 9.
		No	Go to next step.
4	**INSPECT POOR CONNECTION OF GENERATOR CONNECTOR** • Disconnect generator connector. • Inspect for poor connection (damaged, pulled-out terminals, corrosion, etc.). • Is there any malfunction?	Yes	Repair or replace terminals, then go to Step 9.
		No	Go to next step.
5	**INSPECT GENERATOR CONTROL CIRCUIT FOR SHORT TO GROUND** • Inspect for continuity between generator terminal D (harness-side) and body ground. • Is there continuity?	Yes	Repair or replace harness for short to ground, then go to Step 9.
		No	Go to next step.
6	**INSPECT GENERATOR OUTPUT VOLTAGE MONITOR CIRCUIT FOR SHORT TO GROUND** • Inspect for continuity between generator terminal P (harness-side) and body ground. • Is there continuity?	Yes	Repair or replace harness for short to ground, then go to Step 9.
		No	Go to next step.
7	**INSPECT GENERATOR CONTROL CIRCUIT FOR OPEN** • Measure resistance between generator terminal D (harness-side) and PCM terminal 1AD (harness-side). • Is there continuity?	Yes	Go to next step.
		No	Repair or replace harness for open circuit, then go to Step 9.
8	**INSPECT GENERATOR OUTPUT VOLTAGE MONITOR CIRCUIT FOR OPEN CIRCUIT** • Measure resistance between generator terminal P (harness-side) and PCM terminal 1AA (harness-side). • Is there continuity?	Yes	Repair or replace generator, then go to next step.
		No	Repair or replace harness for open, then go to next step.
9	**VERIFY TROUBLESHOOTING OF DTC P2503 COMPLETED** • Make sure to reconnect all connectors. • Clear DTC from PCM memory using WDS or equivalent. • Perform KOER self-test. (See F3–103 KOEO/KOER SELF-TEST PROCEDURE.) • Is the same DTC present?	Yes	Replace PCM, then go to next step. (See F3–81 PCM REMOVAL/INSTALLATION.)
		No	Go to next step.
10	**VERIFY AFTER REPAIR PROCEDURE** • Perform “After Repair Procedure”. (See F3–104 AFTER REPAIR PROCEDURE.) • Is there any DTC present?	Yes	Go to applicable DTC troubleshooting. (See F3–104 DTC TABLE.)
		No	Troubleshooting completed.

End Of Ste

DTC P2504

AME417001083W16

DTC P2504	Battery overcharge
DETECTION CONDITION	• PCM judges generator output voltage is **above 18.5 V** or battery voltage is **above 16.0 V** when engine is running.
POSSIBLE CAUSE	• Short to power circuit between generator connector terminal D and PCM connector terminal 1AD • Generator malfunction • PCM and/or generator are poorly connected.

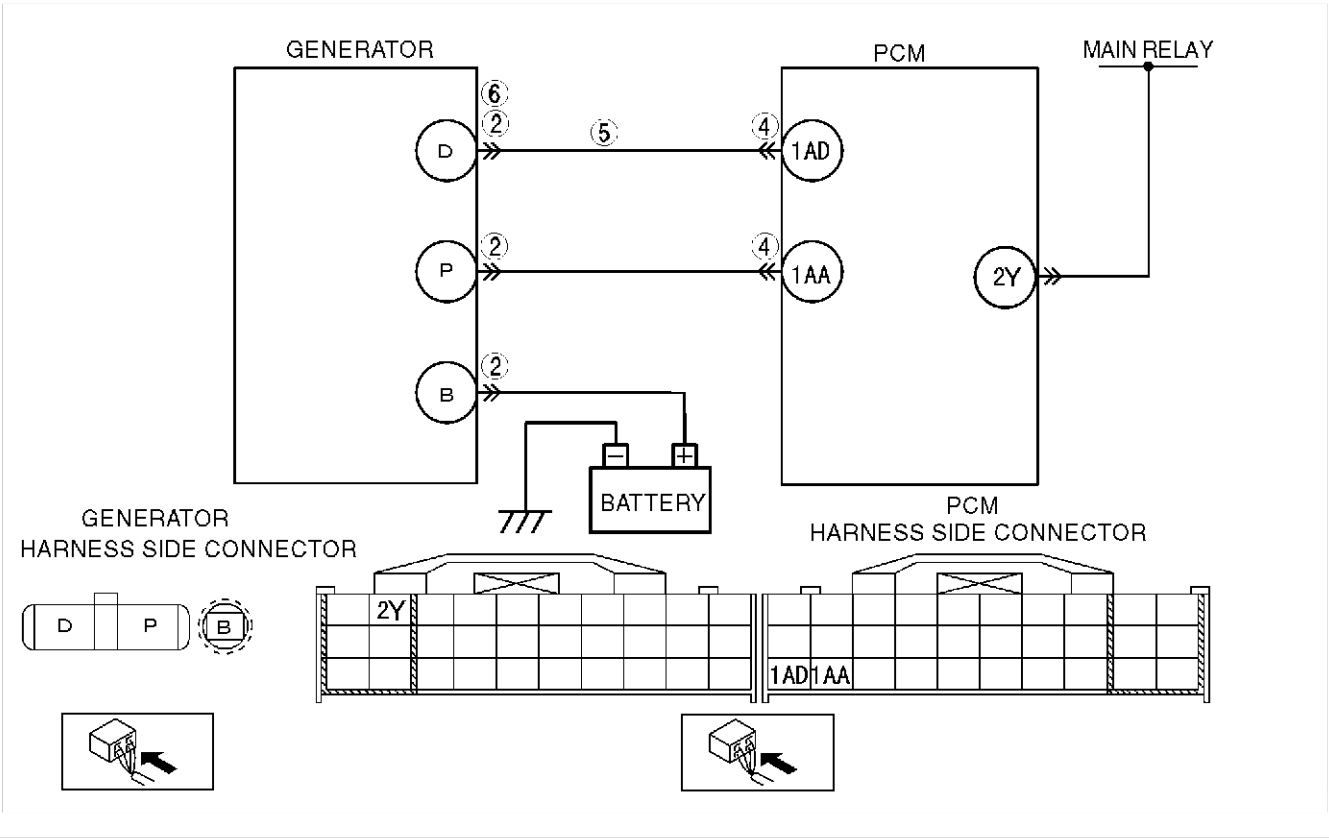

Diagnostic procedure

STEP	INSPECTION		ACTION
1	**PERFORM DTC CONFIRMATION PROCEDURE** • Perform DTC CONFIRMATION PROCEDURE. (See F3–103 DTC CONFIRMATION PROCEDURE.) • Is same DTC present?	Yes	Go to next step.
		No	Intermittent concern exists. Go to INTERMITTENT CONCERN TROUBLESHOOTING procedure. (See F3–270 INTERMITTENT CONCERN TROUBLESHOOTING.)

STEP	INSPECTION		ACTION
2	**INSPECT POOR CONNECTION OF GENERATOR CONNECTOR** • Turn ignition key to OFF. • Disconnect generator connector. • Check for poor connection (damaged, pulled-out terminals, corrosion, etc.). • Is there any malfunction?	Yes	Repair or replace terminals, then go to Step 7.
		No	Go to next step.
3	**CLASSIFY GENERATOR MALFUNCTION OR OTHER MALFUNCTION** • Turn ignition key to ON (Engine OFF). • Measure voltage between generator terminal D (harness-side) and body ground. • Is voltage **B+**?	Yes	Go to next step.
		No	Malfunction at generator. Go to Step 6.
4	**INSPECT POOR CONNECTION OF PCM CONNECTOR** • Turn ignition key to OFF. • Disconnect PCM connector. • Check for poor connection (damaged, pulled-out terminals, corrosion, etc.). • Is there any malfunction?	Yes	Repair or replace pins, then go to Step 7.
		No	Go to next step.
5	**INSPECT GENERATOR CONTROL CIRCUIT FOR SHORT TO POWER** • Turn ignition key to ON (engine OFF). • Measure voltage between generator terminal D (harness-side) and body ground. • Is voltage **B+**?	Yes	Repair or replace harness for short to power, then go to Step 7.
		No	Go to Step 7.
6	**INSPECT GENERATOR CONTROL TERMINAL FOR SHORT TO POWER** • Measure resistance between generator terminal D (part-side) and body ground. • Is voltage **B+**?	Yes	Repair or replace generator, then go to Step 7.
		No	Go to next step.
7	**VERIFY TROUBLESHOOTING OF DTC P2504 COMPLETED** • Make sure to reconnect all connectors. • Clear DTC from PCM memory using WDS or equivalent. • Perform KOER self-test. (See F3–103 KOEO/KOER SELF-TEST PROCEDURE.) • Is same DTC present?	Yes	Replace PCM, then go to next step. (See F3–81 PCM REMOVAL/INSTALLATION.)
		No	Go to next step.
8	**VERIFY AFTER REPAIR PROCEDURE** • Perform “After Repair Procedure”. (See F3–104 AFTER REPAIR PROCEDURE.) • Is there any DTC present?	Yes	Go to applicable DTC troubleshooting. (See F3–104 DTC TABLE.)
		No	Troubleshooting completed.

End Of Ste

TROUBLESHOOTING

ENGINE SYMPTOM TROUBLESHOOTING

AME418018881W01

- Confirm trouble symptom using the following diagnostic index, then go to appropriate troubleshooting chart.

Diagnostic Index

No.	TROUBLESHOOTING ITEM		DESCRIPTION
1	Melting of main or other fuses		—
2	MIL illuminates		MIL is illuminated incorrectly.
3	Will not crank		Starter does not work.
4	Hard to start/long crank/erratic start/erratic crank		Starter cranks engine at normal speed but engine requires excessive cranking time before starting.
5	Engine stalls.	After start/at idle	Engine stops unexpectedly at idle and/or after start.
6	Cranks normally but will not start		Starter cranks engine at normal speed but engine will not run.
7	Slow return to idle		Engine takes more time than normal to return to idle speed.
8	Engine runs rough/rolling idle		Engine speed fluctuates between specified idle speed and lower speed and engine shakes excessively.
9	Fast idle/runs on		Engine speed continues at fast idle after warm-up. Engine runs after ignition switch is turned to off.
10	Low idle/stalls during deceleration		Engine stops unexpectedly at beginning of deceleration or recovery from deceleration.
11	Engine stalls/quits.	Acceleration/cruise	Engine stops unexpectedly at beginning of acceleration or during acceleration. Engine stops unexpectedly while cruising.
	Engine runs rough.	Acceleration/cruise	Engine speed fluctuates during acceleration or cruising.
	Misses	Acceleration/cruise	Engine misses during acceleration or cruising.
	Buck/jerk	Acceleration/cruise/ deceleration	Vehicle bucks/jerks during acceleration, cruising, or deceleration.
	Hesitation/stumble	Acceleration	Momentary pause at beginning of acceleration or during acceleration
	Surges	Acceleration/cruise	Momentary minor irregularity in engine output
12	Lack/loss of power	Acceleration/cruise	Performance is poor under load. (e.g., power down when climbing hills)
13	Knocking/pinging	Acceleration/cruise	Sound is produced when air/fuel mixture is ignited by something other than spark plug. (e.g., hot spot in combustion chamber)
14	Poor fuel economy		Fuel economy is unsatisfactory.
15	Emission compliance		Fails emissions test.
16	High oil consumption/leakage		Oil consumption is excessive.
17	Cooling system concerns	Overheating	Engine runs at higher than normal temperature/overheats.
18	Cooling system concerns	Runs cold	Engine does not reach normal operating temperature.
19	Exhaust smoke		Blue, black, or white smoke from exhaust system
20	Fuel odor (in engine compartment)		Gasoline fuel smell or visible leakage
21	Engine noise		Engine noise from under hood
22	Vibration concerns (engine)		Vibration from under hood or driveline
23	A/C does not work sufficiently.		A/C compressor magnetic clutch does not engage when A/C is turned on.
24	A/C is always on or A/C compressor runs continuously.		A/C compressor magnetic clutch does not disengage.
25	A/C is not cut off under WOT conditions.		A/C compressor magnetic clutch does not disengage under WOT.
26	Exhaust sulphur smell		Rotten egg smell (sulphur) from exhaust
27	Constant voltage		Incorrect constant voltage
28	Spark plug condition		Incorrect spark plug condition

End Of Sie

QUICK DIAGNOSTIC CHART

AME418018881W02

X: Applied

Troubleshooting item			Possible factor: Starter motor malfunction (Mechanical or electrical)	Starter circuit including ignition switch is open.	Starter interlock switch malfunction (with starter interlock system)	Improper engine oil level	Low or dead battery	Charging system malfunction	Improper engine compression	Improper valve timing	Hydrolocked engine	Improper engine oil viscosity	Improper dipstick	Base engine malfunction	Flywheel are seized.	Improper tension or damaged drive belts	Improper engine coolant level	Water and anti-freeze mixture is improper.	Cooling system malfunction (Radiator, hoses, overflow system, thermostat, etc.)	Cooling fan system malfunction	Engine or transaxle mounts are improperly installed.	Cooling fan or condenser fan seat are improper.	Accelerator cable free play misadjustment	Cruise control cable misadjustment	Fuel quality
1	Melting of main or other fuses																								
2	MIL illuminates		x	x	x		x	x			x				x										
3	Will not crank																								
4	Hard to start/long crank/erratic start/erratic crank																								x
5	Engine stalls.	After start/at idle							x	x	x														x
6	Cranks normally but will not start								x	x	x														x
7	Slow return to idle																		x						
8	Engine runs rough/rolling idle								x	x															x
9	Fast idle/runs on																					x	x		
10	Low idle/stalls during deceleration																								
11	Engine stalls/quits.	Acceleration/cruise							x	x															x
	Engine runs rough.	Acceleration/cruise							x	x															x
	Misses	Acceleration/cruise							x	x															x
	Buck/jerk	Acceleration/cruise/ deceleration							x	x															x
	Hesitation/stumble	Acceleration							x	x															x
	Surges	Acceleration/cruise							x	x															x
12	Lack/loss of power	Acceleration/cruise							x	x															x
13	Knocking/pinging	Acceleration/cruise							x										x						
14	Poor fuel economy								x	x							x		x	x					x
15	Emission compliance								x	x				x					x						
16	High oil consumption/leakage											x	x	x											
17	Cooling system concerns	Overheating														x	x	x	x	x					
18	Cooling system concerns	Runs cold																	x	x					
19	Exhaust smoke								x					x					x						
20	Fuel odor (in engine compartment)																								
21	Engine noise					x								x		x									
22	Vibration concerns (engine)															x					x	x			
23	A/C does not work sufficiently.																								
24	A/C is always on or A/C compressor runs continuously.																								
25	A/C is not cut off under WOT conditions.																								
26	Exhaust sulfur smell																								x
27	Constant voltage																								
28	Spark plug condition								x					x											

AME4180W001

F3

X: Applied

	Possible factor / Troubleshooting item		VTCS malfunction	Engine overheating	Air cleaner element clogging or restriction	Air leakage from intake-air system (Loose tubes, cracks, gaskets breakage)	IAC valve improper operation	Throttle body malfunction	VIS malfunction	Vacuum leakage (Vacuum hose damage, misrouting)	Ignition coil malfunction (e.g. open, short or cracks)	Initial ignition timing misadjustment (CKP sensor & crankshaft pulley misadjustment)	Spark plug malfunction	High-tension leads malfunction (Cracks, open, low resistance)	CKP sensor is damaged. (e.g. open or short circuits)	Crankshaft pulley is damaged	Improper gap between CKP sensor and crankshaft	Fuel pump malfunction (Mechanically or electrically)	Pressure regulator malfunction	Fuel hoses restriction or clogging
1	Melting of main or other fuses																			
2	MIL illuminates		x				x		x						x					
3	Will not crank																			
4	Hard to start/long crank/erratic start/erratic crank				x	x	x			x			x	x	x	x	x	x	x	x
5	Engine stalls.	After start/at dle		x	x	x	x			x	x	x	x	x	x	x	x	x	x	x
6	Cranks normally but will not start			x	x	x	x			x	x	x	x	x	x	x	x	x	x	x
7	Slow return to idle							x												
8	Engine runs rough/rolling idle			x	x	x	x			x		x	x	x	x	x	x	x	x	x
9	Fast idle/runs on					x		x												
10	Low idle/stalls during deceleration					x	x			x										
11	Engine stalls/quits.	Acceleration/cruise	x	x	x	x	x	x		x			x	x	x	x	x	x	x	x
	Engine runs rough.	Acceleration/cruise	x	x	x	x	x	x		x			x	x	x	x	x	x	x	x
	Misses	Acceleration/cruise	x	x	x	x	x	x		x			x	x	x	x	x	x	x	x
	Buck/jerk	Acceleration/cruise/deceleration	x	x	x	x	x	x		x			x	x	x	x	x	x	x	x
	Hesitation/stumble	Acceleration	x	x	x	x	x	x		x			x	x	x	x	x	x	x	x
	Surges	Acceleration/cruise	x	x	x	x	x	x		x			x	x	x	x	x	x	x	x
12	Lack/loss of power	Acceleration/cruise	x	x	x	x		x	x	x			x		x	x	x	x	x	x
13	Knocking/pinging	Acceleration/cruise		x														x	x	
14	Poor fuel economy		x		x				x				x	x					x	
15	Emission compliance				x	x		x		x			x	x				x	x	x
16	High oil consumption/leakage																			
17	Cooling system concerns	Overheating																		
18	Cooling system concerns	Runs cold																		
19	Exhaust smoke				x								x	x				x	x	x
20	Fuel odor (in engine compartment)																		x	
21	Engine noise					x				x										
22	Vibration concerns (engine)																			
23	A/C does not work sufficiently.																			
24	A/C is always on or A/C compressor runs continuously.																			
25	A/C is not cut off under WOT conditions.																			
26	Exhaust sulfur smell									x								x	x	x
27	Constant voltage																			
28	Spark plug condition				x								x		x			x	x	x

AME4180W002

x Applied

	Possible factor / Troubleshooting item		Injectors malfunction (Leakage or clogging, inope-rative	Fuel leakage from fuel system (including insulator, injector O-ring)	Fuel filters restriction or clogging	CMP sensor is damaged. (e.g. open or short circuit)	Camshaft is damaged..	Improper air/fuel mixture ratio control	Exhaust system restriction or clogging	Catalytic converter malfunction	EGR system malfunction	EVAP control system malfunction	PCV valve malfunction	Constant voltage supply circuit malfunction	Main relay malfunction (Mechanically or electrically)	ECT sensor malfunction	Break switch and related circuit malfunction	Manifold absolute pressure sensor and related sircuit malfunction	HO2S and related circuit malfunction
1	Melting of main or other fuses																		
2	MIL illuminates					x		x								x	x	x	x
3	Will not crank																		
4	Hard to start/long crank/erratic start/erratic crank				x			x	x		x	x	x						x
5	Engine stalls.	After start/at idle	x	x				x	x		x	x	x		x				x
6	Cranks normally but will not start		x	x				x	x		x	x	x	x	x				x
7	Slow return to idle															x			
8	Engine runs rough/rolling idle		x		x	x	x	x	x		x	x	x						x
9	Fast idle/runs on															x			
10	Low idle/stalls during deceleration							x				x					x		x
11	Engine stalls/quits.	Acceleration/cruise	x		x	x	x	x	x		x	x	x	x	x				x
	Engine runs rough.	Acceleration/cruise	x		x	x	x	x	x		x	x	x	x	x				x
	Misses	Acceleration/cruise	x		x	x	x	x	x		x	x	x	x	x				x
	Buck/jerk	Acceleration/cruise/ deceleration	x		x	x	x	x	x		x	x	x	x	x				x
	Hesitation/stumble	Acceleration	x		x	x	x	x	x		x	x	x	x	x				x
	Surges	Acceleration/cruise	x		x	x	x	x	x		x	x	x	x	x				x
12	Lack/loss of power	Acceleration/cruise	x			x	x		x		x	x	x			x			
13	Knocking/pinging	Acceleration/cruise				x													
14	Poor fuel economy				x	x	x		x				x						
15	Emission compliance				x	x	x	x	x	x	x	x	x						x
16	High oil consumption/leakage												x						
17	Cooling system concerns	Overheating																	
18	Cooling system concerns	Runs cold																	
19	Exhaust smoke		x										x						
20	Fuel odor (in engine compartment)			x								x							
21	Engine noise																		
22	Vibration concerns (engine)																		
23	A/C does not work sufficiently.																		
24	A/C is always on or A/C compressor runs continuously.																		
25	A/C is not cut off under WOT conditions.																		
26	Exhaust sulfur smell				x							x							
27	Constant voltage													x		x		x	x
28	Spark plug condition		x	x				x								x			

AME4180W003

F3

X: Applied

	Possible factor / Troubleshooting item		IAT sensor and related circuit malfunction	Barometric pressure sensor malfunction	Neutral or clutch switch and related circuit malfunction	MAF sensor and related circuit malfunction	Knock sensor and related circuit malfunction	TP sensor and related circuit malfunction	TP sensor misadjustment (including looseness)	P/S pressure switch and related circuit malfunction	Improper refrigerant charging amount	A/C relay (A/C control signal circuit malfunction	A/C compressor magnetic clutch malfunction	Condenser fan system malfunction	Improper load signal input	Clutch slippage	VSS and related circuit malfunction	Brake dragging	Loose parts	Improper balance of wheels and tires	Drive line malfunction	Suspension malfunction	Immobilizer system operating (if equipped)
1	Melting of main or other fuses																						
2	MIL illuminates		x	x	x	x	x	x		x							x						
3	Will not crank																						x
4	Hard to start/long crank/erratic start/erratic crank					x																	
5	Engine stalls.	After start/at idle		x							x	x											x
6	Cranks normally but will not start																						x
7	Slow return to idle																						
8	Engine runs rough/rolling idle			x						x	x	x		x	x								
9	Fast idle/runs on														x								
10	Low idle/stalls during deceleration			x	x	x		x	x			x											
11	Engine stalls/quits.	Acceleration/cruise		x		x		x	x		x	x				x	x						
	Engine runs rough.	Acceleration/cruise		x		x		x	x		x	x				x	x						
	Misses	Acceleration/cruise				x		x	x		x	x				x	x						
	Buck/jerk	Acceleration/cruise /deceleration				x		x	x		x	x				x	x						
	Hesitation/stumble	Acceleration		x		x		x	x		x	x				x	x						
	Surges	Acceleration/cruise				x		x	x		x	x				x	x						
12	Lack/loss of power	Acceleration/cruise				x		x			x	x				x	x	x					
13	Knocking/pinging	Acceleration/cruise	x			x	x																
14	Poor fuel economy					x								x		x		x					
15	Emission compliance			x																			
16	High oil consumption/leakage																						
17	Cooling system concerns	Overheating									x	x		x									
18	Cooling system concerns	Runs cold												x									
19	Exhaust smoke																						
20	Fuel odor (in engine compartment)																						
21	Engine noise																		x				
22	Vibration concerns (engine)																		x	x	x	x	
23	A/C does not work sufficiently.										x	x	x										
24	A/C is always on or A/C compressor runs continuously.											x	x										
25	A/C is not cut off under WOT conditions.							x	x														
26	Exhaust sulfur smell																						
27	Constant voltage		x	x		x		x				x											
28	Spark plug condition				x	x																	

AME4180W004

End Of Sie

NO.1 MELTING OF MAIN OR OTHER FUSES

AME418018881W03

1	MELTING OF MAIN OR OTHER FUSES

[TROUBLESHOOTING HINTS]
Inspect condition of fuse.

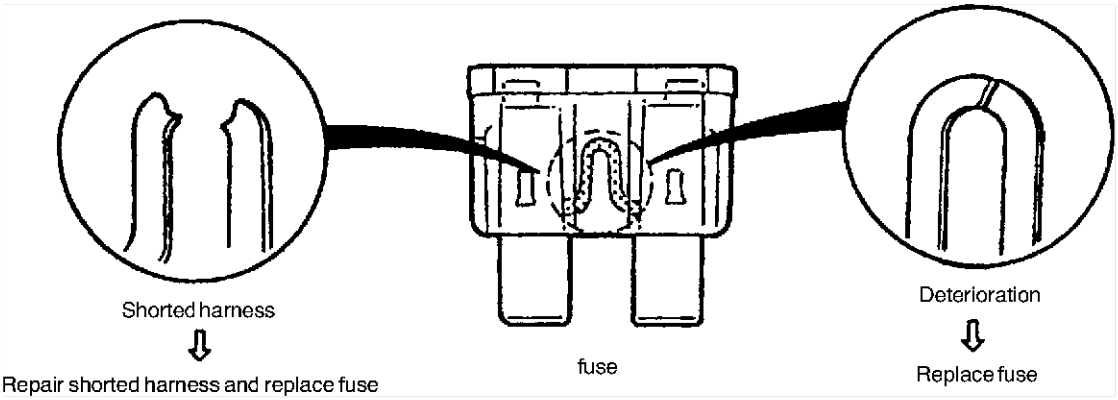

Damaged fuse	Related wiring harness
MAIN	• IG KEY2 fuse • BTN fuse • FAN1 fuse • FAN2 fuse
IG KEY1	• Ignition switch — ENGINE fuse
FUEL PUMP	• Fuel pump relay — Fuel pump
BTN	• Ignition switch — ENGINE fuse
IG KEY2	• Ignition switch
FAN1	• Cooling fan relay — Fan control module
FAN2	• Cooling fan relay — Fan control module
ROOM	• Immobilizer unit • DLC-2
ENGINE	• Main relay • Condenser • Ignition coil • Heated oxygen sensor heater (front/rear)
EGI INJ	• EEC fuse • Main relay — PCM — Fuel injectors — EGR valve — VIS control solenoid valve — Purge solenoid valve — Variable tumble control solenoid valve — MAF/IAT sensor — Fuel pump relay — Cooling fan relay
EEC	• PCM

End Of Sec

NO.2 MIL ILLUMINATES

AME418018881W04

2	MIL ILLUMITATES
DESCRIPTION	MIL is illuminated incorrectly.
POSSIBLE CAUSE	• PCM illuminates for emission-related concern (DTC is stored in PCM) • Instrument cluster malfunction **Note** • If MIL blinks at steady rate, misfire condition could possibly exist.

Diagnostic procedure

STEP	INSPECTION	RESULTS	ACTION
1	Connect WDS or equivalent to DLC-2. Retrieve any DTC. Are there DTC displayed?	Yes	**DTC is displayed:** • Go to appropriate DTC test.
		No	**No DTC is displayed:** • Inspect instrument cluster operation. See Section T.
2	Verify test results. • If okay, return to diagnostic index to service any additional symptoms. • If malfunction remains, replace PCM.		

End Of Se

NO.3 WILL NOT CRANK

AME418018881W05

3	WILL NOT CRANK
DESCRIPTION	Starter does not work.
POSSIBLE CAUSE	• Open starter circuit between ignition switch and starter • Low or dead battery. • Charging system malfunction. • Starter interlock switch malfunction (with starter interlock system). • Starter malfunction • Seized/hydrolocked engine, flywheel

Diagnostic procedure

STEP	INSPECTION	RESULTS	ACTION
1	Inspect following: • Battery connection • Battery condition • Clutch is fully depressed. (with starter interlock system) • Fuses Are all items okay?	Yes	Go to next step.
		No	Service as necessary. Repeat Step 1.

STEP	INSPECTION	RESULTS	ACTION
2	Is clicking sound heard from starter when ignition switch is turned to START?	Yes	Go to next step.
		No	Go to Step 4.
3	Inspect starting system. (See G–18 STARTER INSPECTION.) Is starting system okay?	Yes	Inspect for seized/hydrolocked engine, flywheel. (See H–14 FLYWHEEL INSPECTION.)
		No	Repair or replace components as required.
4	Do any other electrical accessories work?	Yes	Go to next step.
		No	Inspect charging system. (See G–10 BATTERY INSPECTION.) (See G–13 GENERATOR INSPECTION.)
5	Connect WDS or equivalent to DLC-2. Retrieve any continuous memory DTCs. Are there any continuous memory DTCs displayed?	Yes	**DTC is displayed:** Go to appropriate DTC test. **Communication error message is displayed:** Inspect for following: • Open circuit between main relay and PCM terminal 2Y • Open circuit between main relay terminal E and PCM terminal 2X • Main relay is stuck open. • Open or poor GND circuit (PCM terminal 4X, 2AB or 2AC) • Poor connection of vehicle body GND
		No	**No DTC is displayed:** Inspect following: • START circuit in ignition switch • Open circuit between ignition switch and starter • Starter interlock switch (with stater interlock system)
6	Retrieve any KOEO DTCs. Are there DTCs displayed during KOEO inspection?	Yes	**DTC is displayed:** Go to appropriate DTC test.
		No	**No DTC is displayed:** Inspect following: • START circuit in ignition switch • Open circuit between ignition switch and starter • Starter interlock switch (with stater interlock system)
7	Verify test results. • If okay, return to diagnostic index to service any additional symptoms. • If malfunction remains, replace PCM.		

End Of Ste

F3

NO.4 HARD TO START/LONG CRANK/ERRATIC START/ERRATIC CRANK

AME418018881W06

4	HARD TO START/LONG CRANK/ERRATIC START/ERRATIC CRANK
DESCRIPTION	• Starter cranks engine at normal speed but engine requires excessive cranking time before starting. • Battery is in normal condition.
POSSIBLE CAUSE	• Spark leakage from high-tension leads • Vacuum leakage • Poor fuel quality • Starting system malfunction • Spark plug malfunction • Air leakage from intake-air system • Erratic signal from CKP sensor • Erratic signal from CMP sensor • Improper air/fuel mixture ratio control • Air cleaner restriction • IAC valve malfunction • PCV valve malfunction • Inadequate fuel pressure • Purge solenoid valve malfunction • MAF sensor contamination • Restriction in exhaust system • EGR valve malfunction • Pressure regulator malfunction **Warning** **The following troubleshooting flow chart contains the fuel system diagnosis and repair procedures. Read the following warnings before performing the fuel system services:** • **Fuel vapor is hazardous. It can easily ignite, causing serious injury and damage. Always keep sparks and flames away from fuel.** • **Fuel line spills and leakage are dangerous. Fuel can ignite and cause serious injuries or death and damage. Fuel can also irritate skin and eyes. To prevent this, always complete "BEFORE REPAIR PROCEDURE" and "AFTER REPAIR PROCEDURE" described in this manual.** **(See F3–57 BEFORE REPAIR PROCEDURE.)** **(See F3–57 AFTER REPAIR PROCEDURE.)** **Caution** • **Disconnecting/connecting quick release connector without cleaning it may possibly cause damage to fuel pipe and quick release connector. Always clean quick release connector joint area before disconnecting/connecting, and make sure that it is free of foreign material.**

Diagnostic procedure

STEP	INSPECTION	RESULTS	ACTION
1	Inspect for following: • Vacuum leakage • Proper fuel quality (e.g. proper octane, contamination, winter/summer blend) • Loose bands on intake-air system • Cracks on intake-air system parts • Air cleaner restriction Are all items okay?	Yes	Go to next step.
		No	Service as necessary. Repeat Step 1.
2	Connect WDS or equivalent to DLC-2. Retrieve any KOEO and KOER DTC. Is any KOEO or KOER DTC displayed?	Yes	**DTC is displayed:** Go to appropriate DTC test.
		No	**No DTC is displayed:** Go to next step.
3	Is engine overheating?	Yes	Go to symptom troubleshooting “No.17 Cooling system concerns – Overheating”.
		No	Go to next step.

STEP	INSPECTION	RESULTS	ACTION
4	Inspect for cracks on high-tension leads. Are there any cracks on high-tension leads?	Yes	Repair suspected high-tension leads.
		No	Go to next step.
5	Inspect spark plug conditions. Is spark plug wet, covered with carbon or grayish white?	Yes	**Spark plug is wet or covered with carbon:** Inspect for fuel leakage from fuel injector. **Spark plug is grayish white:** Inspect for clogged fuel injector.
		No	Install spark plugs on original cylinders. Go to next step.
6	Visually inspect CKP sensor and teeth of crankshaft pulley. Are CKP sensor and teeth of crankshaft pulley okay?	Yes	Go to next step.
		No	Replace malfunctioning parts.
7	Measure gap between CKP sensor and teeth of crankshaft pulley. **Specification** **0.5—1.9 mm {0.020—0.75 in}** Is gap within specification?	Yes	Go to next step.
		No	Adjust CKP sensor.
8	Remove and shake PCV valve. Does PCV valve rattle?	Yes	Go to next step.
		No	Replace PCV valve.
9	Install fuel pressure gauge between fuel pipe and fuel distributor. Connect a jumper wire between F/P terminal at DLC-2 in engine compartment and GND. Turn ignition switch to ON position. Is fuel line pressure correct with ignition switch ON? (See F3–58 FUEL LINE PRESSURE INSPECTION)	Yes	Go to next step.
		No	**Zero or low:** Inspect for clogged fuel line. If okay, replace fuel pump unit. **High:** Replace fuel pump unit.
10	Is fuel line pressure held after ignition switch is turned off? (See F3–58 FUEL LINE PRESSURE INSPECTION)	Yes	Go to next step.
		No	Inspect fuel injector. If fuel injector is okay, replace fuel pump unit.
11	Disconnect a vacuum hose from purge solenoid valve and plug opening end of vacuum hose. Attempt to start engine. Is starting condition improved?	Yes	Inspect if purge solenoid valve sticks open.
		No	Go to next step.
12	Inspect MAF sensor for contamination. Is there any contamination?	Yes	Replace MAF sensor.
		No	Go to next step.
13	Is there restriction in exhaust system?	Yes	Inspect exhaust system.
		No	Go to next step.
14	Inspect engine condition while tapping EGR valve housing. Does engine condition improve?	Yes	Replace EGR valve.
		No	Go to next step.
15	Inspect starting system. (See G–18 STARTER INSPECTION.) Is starting system normal?	Yes	Inspect for loose connectors or poor terminal contact. If okay, remove EGR valve and visually inspect for mechanically stuck EGR valve.
		No	Repair or replace components as required.
16	Verify test results. • If okay, return to diagnostic index to service any additional symptoms. • If malfunction remains, replace PCM.		

End Of Ste

F3

NO.5 ENGINE STALLS-AFTER START/AT IDLE

AME418018881W07

5	ENGINE STALLS—AFTER START/AT IDLE
DESCRIPTION	• Engine stops unexpectedly.
POSSIBLE CAUSE	• A/C system operation is improper • Air leakage from intake-air system parts • Purge solenoid valve malfunction • Improper operation of IAC valve • EGR valve malfunction • No signal from CKP sensor due to sensor, related wire or wrong installation • Vacuum leakage • Engine overheating • Low engine compression • Spark leakage from high-tension leads • Poor fuel quality • PCV valve malfunction • Air cleaner restriction • Restriction in exhaust system • Electrical connector disconnection • Open or short circuit in fuel pump body and related harness • No battery power supply to PCM or poor GND • Inadequate fuel pressure • Fuel pump body mechanical malfunction • Fuel leakage from fuel injector • Fuel injector clogging • Ignition coil malfunction • Improper air/fuel mixture ratio control • Improper valve timing • Immobilizer system and/or circuit malfunction (if equipped) • Pressure regulator malfunction **Warning** **The following troubleshooting flow chart contains the fuel system diagnosis and repair procedures. Read the following warnings before performing the fuel system services:** • **Fuel vapor is hazardous. It can easily ignite, causing serious injury and damage. Always keep sparks and flames away from fuel.** • **Fuel line spills and leakage are dangerous. Fuel can ignite and cause serious injuries or death and damage. Fuel can also irritate skin and eyes. To prevent this, always complete "BEFORE REPAIR PROCEDURE" and "AFTER REPAIR PROCEDURE" described in this manual.** **(See F3–57 BEFORE REPAIR PROCEDURE.)** **(See F3–57 AFTER REPAIR PROCEDURE.)** **Caution** • **Disconnecting/connecting quick release connector without cleaning it may possibly cause damage to fuel pipe and quick release connector. Always clean quick release connector joint area before disconnecting/connecting, and make sure that it is free of foreign material.**

Diagnostic procedure

STEP	INSPECTION	RESULTS	ACTION
1	**Note** • The following test should be performed for vehicles with immobilizer system. Go to Step 12 for vehicles without immobilizer system. Connect WDS or equivalent to DLC-2. Do following conditions appear? • Engine is not completely started. • DTC P1624 is displayed.	Yes	**Both conditions appear:** Go to Step 4.
		No	**Either or other condition appears:** Go to next step.
2	Does engine stall after **approx. 2 seconds** since engine is started?	Yes	Go to next step.
		No	immobilizer system is okay. Go to Step 12.
3	Is immobilizer unit connector securly connected to immobilizer unit?	Yes	Go to next step.
		No	Connect immobilizer unit connector securely. Return to Step 2.

STEP	INSPECTION	RESULTS	ACTION
4	Does immobilizer indicator light flash and indicate any of following immobilizer system DTC's? **DTC** **01, 02, 03, 11, 21**	Yes	Go to "ON-BOARD DIAGNOSTIC FUNCTION" of immobilizer system.
		No	Go to next step.
5	Does security light illuminate?	Yes	Go to Step 8.
		No	Go to next step.
6	Does security light flash and indicate any of following immobilizer system DTCs **more than 135 seconds** after ignition switch is turned to ON? **DTC** **24, 30**	Yes	Go to "ON-BOARD DIAGNOSTIC FUNCTION" of immobilizer system.
		No	Go to next step.
7	Turn ignition switch off. Disconnect immobilizer unit connector. Connect iumper wire between immobilizer unit connector terminal M and GND. Turn igniiton switch to ON position. Does security light illuminate?	Yes	Reconnect immobilizer unit connector. Go to next step.
		No	Inspect for open circuit between immobilizer unit connector terminal M and instrument cluster. If okay, inspect security light bulb. Repair or replace if necessary. Reconnect immobilizer unit connector, then return to step 4.
8	Connect WDS or equivalent to DLC-2 and retrieve DTC. Are any of following DTCs displayed? **DTC** **P1602, P1603, P1604, P1621, P1622, P1624**	Yes	Go to appropriate DTC test.
		No	Go to next step.
9	Is there continuity between PCM GND terminals 4A, 4B, 4C and GND?	Yes	Go to next step.
		No	Repair or replace wiring harness.
10	Turn ignition switch to ON position. Access VPWR PID. Is VPWR PID okay? **VPWR PID** **Battery voltage**	Yes	Go to next step.
		No	Repair or replace wiring harness.
11	Disconnect coil connector. Turn ignition switch to ON position. Is there battery voltage at immobilizer unit connector terminal J?	Yes	Inspect for open circuit between PCM connector terminal 2Q and immobilizer unit connector terminal A.
		No	Repair or replace wiring harness between immobilizer unit connector terminal Jand fuse panel.
12	Verify following: • Vacuum connection • Air cleaner element • No air leakage from intake-air system • No restriction of intake-air system • Proper sealing of intake manifold and components attached to intake manifold: EGR valve, IAC valve • Ignition wiring • Fuel quality: proper octane, contamination, winter/summer blend • Electrical connections • Smooth operation of throttle valve Are all items okay?	Yes	Go to next step.
		No	Service as necessary. Repeat Step 12.
13	Turn ignition switch to ON position. Disconnect TP sensor connector. Measure voltage at TP sensor connector VREF terminal with ignition switch ON. **Voltage** **4.5—5.5 V** Is voltage okay?	Yes	Go to next step.
		No	Go to troubleshooting "No.27 Constant voltage".

F3

STEP	INSPECTION	RESULTS	ACTION
14	Connect WDS or equivalent to DLC-2. Retrieve any continuous memory, KOEO and KOER DTCs. If engine stalls, retrieve continuous memory and KOEO DTCs. Are there any DTC displayed?	Yes	**DTC is displayed:** Go to appropriate DTC test. **Communication error message is displayed:** Inspect for following: • Open circuit between main relay and PCM terminal 2Y • Open main relay GND circuit • Main relay is stuck open. • Open or poor GND circuit (PCM terminal 4X, 2AB or 2AC) • Poor connection of vehicle body GND
		No	**No DTC is displayed:** Go to next step.
15	Attempt to start engine at part throttle. Does engine run smoothly at part throttle?	Yes	Inspect IAC valve and wiring harness.
		No	Go to next step.
16	Connect WDS or equivalent to DLC-2. Access RPM PID. Is RPM PID indicating engine speed during engine cranking?	Yes	Go to next step.
		No	Inspect for following: • Open or short circuit in CKP sensor • Open or short circuit between CKP sensor and PCM terminal 2G or 2D • Open or short circuit in CKP sensor harnesses If CKP sensor and harness are okay, go to next step.
17	Visually inspect CKP sensor and teeth of crankshaft pulley. Are CKP sensor and teeth of crankshaft pulley okay?	Yes	Go to next step.
		No	Replace malfunctioning parts.
18	Measure gap between CKP sensor and teeth of crankshaft pulley. **Specification** **0.5—1.9 mm {0.020—0.075 in}** Is gap within specification?	Yes	Go to next step.
		No	Adjust CKP sensor.
19	Inspect for cracks on high-tension leads. Are there any cracks on high-tension leads?	Yes	Repair suspected high-tension leads.
		No	Go to next step.
20	Is strong blue spark visible at each disconnected high-tension lead while cranking engine?	Yes	Go to next step. If symptom occurs with A/C on, go to Step 24.
		No	Inspect for following: • Open or short circuit in ignition coil • Open circuit in high-tension leads • Open circuit between ignition coil connector GND terminal and body GND • Open circuit between ignition switch and ignition coil • Open circuit between ignition coil and PCM terminal 1A or 1B
21	Inspect spark plug condition. Is spark plug wet, covered with carbon or grayish white?	Yes	**Spark plug is wet or covered with carbon:** Inspect for fuel leakage from injector. **Spark plug is grayish white:** Inspect for clogged fuel injector.
		No	Install spark plugs on original cylinders. Go to next step.

STEP	INSPECTION	RESULTS	ACTION
22	Remove and shake PCV valve. Does PCV valve rattle?	Yes	Go to next step.
		No	Replace PCV valve.
23	Inspect for restriction in the exhaust system. Is there any restriction?	Yes	Inspect exhaust system.
		No	Go to next step.
24	Install fuel pressure gauge between fuel pipe and fuel distributor. Connect jumper wire between F/P terminal at DLC-2 in engine compartment and GND. Turn ignition switch to ON position. Is fuel line pressure correct with ignition switch ON? (See F3–58 FUEL LINE PRESSURE INSPECTION)	Yes	Go to next step.
		No	**Zero or low:** Inspect for clogged fuel line. If okay, replace fuel pump unit. **High:** Replace fuel pump unit.
25	Visually inspect for fuel leakage at fuel injector O-ring and fuel line. Service as necessary. Is fuel line pressure held after ignition switch is turned off? (See F3–58 FUEL LINE PRESSURE INSPECTION	Yes	Go to next step.
		No	Inspect fuel injector. If fuel injector is okay, replace fuel pump unit.
26	**Note** • Following test is for stall concerns with A/C on. If other symptoms exist, go to next step. Connect pressure gauges to A/C low and high pressure side lines. Turn A/C on and measure low side and high side pressures. Are pressures within specifications?	Yes	Go to next step.
		No	If A/C is always on, go to symptom troubleshooting "No.24 A/C is always on or A/C compressor runs continuously". For other symptoms, inspect following: • Refrigerant charging amount • Condenser fan operation
27	Disconnect vacuum hose between purge solenoid valve and intake manifold from purge solenoid side. Plug opening end of vacuum hose. Start engine. Is engine stall now eliminated?	Yes	Inspect if purge solenoid valve sticks open. Inspect evaporative emission control system.
		No	Go to next step.
28	Is air leakage felt or heard at intake-air system components while racing engine to higher speed?	Yes	Repair or replace.
		No	Go to next step.
29	Inspect engine condition while tapping EGR valve housing. Does engine condition improve?	Yes	Replace EGR valve.
		No	Go to next step.
30	Is engine compression correct?	Yes	Inspect valve timing.
		No	Inspect for cause.
31	Verify test results. • If okay, return to diagnostic index to service any additional symptoms. • If malfunction remains, replace PCM.		

End Of Sie

F3

NO.6 CRANKS NORMALLY BUT WILL NOT START

AME418018881W08

6	CRANKS NORMALLY BUT WILL NOT START
DESCRIPTION	• Starter cranks engine at normal speed but engine will not run. • Refer to symptom troubleshooting "No.5 Engine stalls" if this symptom appears after engine stall. • Fuel is in tank. • Battery is in normal condition.
POSSIBLE CAUSE	• No battery power supply to PCM • Air leakage from intake-air system • Open PCM GND or vehicle body GND • Improper operation of IAC valve • EGR valve malfunction • No signal from CKP sensor due to sensor, related wire or incorrect installation • No signal from CMP sensor due to sensor, related wire or incorrect installation • Low engine compression • Engine overheating • Vacuum leakage • Spark leakage from high-tension leads • Improper air/fuel mixture ratio control • Poor fuel quality • PCV valve malfunction • Air cleaner restriction • Restriction in exhaust system • Disconnected electrical connector • Open or short circuit in fuel pump body and related harness • Inadequate fuel pressure • Fuel pump mechanical malfunction • Fuel leakage from injector • Fuel injector is clogged. • Purge solenoid valve malfunction • Spark plug malfunction • Ignition coil malfunction • Improper valve timing • Immobilizer system (PATS) and/or circuit malfunction (if equipped) • Pressure regulator malfunction **Warning** **The following troubleshooting flow chart contains the fuel system diagnosis and repair procedures. Read the following warnings before performing the fuel system services:** • **Fuel vapor is hazardous. It can easily ignite, causing serious injury and damage. Always keep sparks and flames away from fuel.** • **Fuel line spills and leakage are dangerous. Fuel can ignite and cause serious injuries or death and damage. Fuel can also irritate skin and eyes. To prevent this, always complete "BEFORE REPAIR PROCEDURE" and "AFTER REPAIR PROCEDURE" described in this manual.** **(See F3–57 BEFORE REPAIR PROCEDURE.)** **(See F3–57 AFTER REPAIR PROCEDURE.)** **Caution** • **Disconnecting/connecting quick release connector without cleaning it may possibly cause damage to fuel pipe and quick release connector. Always clean quick release connector joint area before disconnecting/connecting, and make sure that it is free of foreign material.**

Diagnostic procedure

STEP	INSPECTION	RESULTS	ACTION
1	**Note** • The following test should be performed for vehicles with immobilizer system. Go to Step 12 for vehicles without immobilizer system. Connect WDS or equivalent to DLC-2. Do following conditions appear? • Engine is not completely started. • DTC P1624 is displayed.	Yes	**Both conditions appear:** Go to Step 4.
		No	**Either or other condition appears:** Go to next step.

STEP	INSPECTION	RESULTS	ACTION
2	Does engine stall after **approx. 2 seconds** since engine is started?	Yes	Go to next step.
		No	immobilizer system is okay. Go to Step 12.
3	Is immobilizer unit connector securly connected to immobilizer unit?	Yes	Go to next step.
		No	Connect immobilizer unit connector securely. Return to Step 2.
4	Does immobilizer indicator light flash and indicate any of following immobilizer system DTC's? **DTC** **01, 02, 03, 11, 21**	Yes	Go to "ON-BOARD DIAGNOSTIC FUNCTION" of immobilizer system.
		No	Go to next step.
5	Does security light illuminate?	Yes	Go to Step 8.
		No	Go to next step.
6	Does security light flash and indicate any of following immobilizer system DTCs **more than 135 seconds** after ignition switch is turned to ON? **DTC** **24, 30**	Yes	Go to "ON-BOARD DIAGNOSTIC FUNCTION" of immobilizer system.
		No	Go to next step.
7	Turn ignition switch off. Disconnect immobilizer unit connector. Connect iumper wire between immobilizer unit connector terminal M and GND. Turn igniiton switch to ON position. Does security light illuminate?	Yes	Reconnect immobilizer unit connector. Go to next step.
		No	Inspect for open circuit between immobilizer unit connector terminal M and instrument cluster. If okay, inspect security light bulb. Repair or replace if necessary. Reconnect immobilizer unit connector, then return to step 4.
8	Connect WDS or equivalent to DLC-2 and retrieve DTC. Are any of following DTCs displayed? **DTC** **P1602, P1603, P1604, P1621, P1622, P1624**	Yes	Go to appropriate DTC test.
		No	Go to next step.
9	Is there continuity between PCM GND terminals 4A, 4B, 4C and GND?	Yes	Go to next step.
		No	Repair or replace wiring harness.
10	Turn ignition switch to ON position. Access VPWR PID. Is VPWR PID okay? **VPWR PID** **Battery voltage**	Yes	Go to next step.
		No	Repair or replace wiring harness.
11	Disconnect coil connector. Turn ignition switch to ON position. Is there battery voltage at immobilizer unit connector terminal J?	Yes	Inspect for open circuit between PCM connector terminal 2Q and immobilizer unit connector terminal A.
		No	Repair or replace wiring harness between immobilizer unit connector terminal Jand fuse panel.
12	Verify following: • Vacuum connection • External fuel shut off or accessory (kill switch, alarm etc.) • Fuel quality: proper octane, contamination, winter/summer blend • No air leakage from intake-air system • Proper sealing of intake manifold and components attached to intake manifold: EGR valve, IAC valve • Ignition wiring • Electrical connections • Fuses • Smooth operation of throttle valve Are all items okay?	Yes	Go to next step.
		No	Service as necessary. Repeat Step 10.

STEP	INSPECTION	RESULTS	ACTION
13	Connect WDS or equivalent to DLC-2. Retrieve any continuous memory and KOEO DTC. Are there any DTCs displayed?	Yes	**DTC is displayed:** Go to appropriate DTC test. **Communication error message is displayed:** Inspect for following: • Open circuit between main relay and PCM terminal 2Y • Open main relay GND circuit • Main relay is stuck open. • Open or poor GND circuit (PCM terminal 4X, 2AB, or 2AC) • Poor connection of vehicle body GND
		No	**No DTC is displayed:** Go to next step.
14	Turn ignition switch to ON position. Disconnect TP sensor connector. Measure voltage at TP sensor connector VREF terminal with ignition switch to ON position. **Voltage** **4.5—5.5 V** Is voltage okay?	Yes	Go to next step.
		No	Go to troubleshooting "No.27 Constant voltage".
15	Does engine start with throttle closed?	Yes	Go to Step 29.
		No	Go to next step.
16	Will engine start and run smoothly at part throttle?	Yes	Inspect IAC valve and wiring harness.
		No	Go to next step.
17	Connect WDS or equivalent to DLC-2. Access RPM PID. Is RPM PID indicating engine speed when cranking engine?	Yes	Go to next step.
		No	Inspect for following: • Open or short circuit in CKP sensor • Open or short circuit between CKP sensor and PCM terminal 2G or 2D • Open or short circuit in CKP sensor harnesses If CKP sensor and harness are okay, go to next step.
18	Visually inspect CKP sensor and teeth of crankshaft pulley. Are CKP sensor and teeth of crankshaft pulley okay?	Yes	Go to next step.
		No	Replace malfunctioning parts.
19	Measure gap between CKP sensor and teeth of crankshaft pulley. **Specification** **0.5—1.9 mm {0.020—0.075 in}** Is gap within specification?	Yes	Go to next step.
		No	Adjust CKP sensor.
20	Inspect for cranks on high-tension leads. Is there any crank on high-tension leads?	Yes	Repair suspected high-tension leads.
		No	Go to next step.
21	Is strong blue spark visible at each disconnected high-tension lead while cranking engine?	Yes	Go to next step.
		No	Inspect for following: • Open or short circuit in ignition coil • Open circuit in high-tension leads • Open circuit between ignition coil connector GND terminal and GND • Open circuit between ignition switch and ignition coil • Open circuit between ignition coil and PCM terminal 1A or 1B

STEP	INSPECTION	RESULTS	ACTION
22	Inspect spark plug conditions. Is spark plug wet, covered with carbon or grayish white?	Yes	**Spark plug is wet or covered with carbon:** Inspect for fuel leakage from injector. **Spark plug is grayish white:** Inspect for clogged fuel injector.
		No	Install spark plugs on original cylinders. Go to next step.
23	Remove and shake PCV valve. Does PCV valve rattle?	Yes	Go to next step.
		No	Replace PCV valve.
24	Inspect for restriction in exhaust system.	Yes	Inspect exhaust system.
		No	Go to next step.
25	Install fuel pressure gauge between fuel pipe and fuel distributor. Connect a jumper wire between F/P terminal at DLC-2 in engine compartment and GND. Turn ignition switch to ON position. Is fuel line pressure correct when ignition switch is turned on/off **five times**? (See F3–58 FUEL LINE PRESSURE INSPECTION)	Yes	Go to next step.
		No	**Zero or low:** Inspect for clogged fuel line. If okay, replace fuel pump unit. **High:** Replace fuel pump unit.
26	Visually inspect for fuel leakage at fuel injector O-ring and fuel line. Service as necessary. Is fuel line pressure held after ignition switch is turned off? (See F3–58 FUEL LINE PRESSURE INSPECTION)	Yes	Go to next step.
		No	Inspect fuel injector. If fuel injector is okay, replace fuel pump unit.
27	Disconnect vacuum hose between purge solenoid valve and intake manifold from purge solenoid valve side. Plug opening end of vacuum hose. Attempt to start engine. Is starting condition improved?	Yes	Inspect if purge solenoid valve sticks open mechanically. Inspect evaporative emission control system.
		No	Go to next step.
28	Is air leakage felt or heard at intake-air system components while racing engine to higher speed?	Yes	Repair or replace.
		No	Go to next step.
29	Inspect engine condition while tapping EGR valve housing. Is engine condition improved?	Yes	Replace EGR valve.
		No	Go to next step.
30	Is engine compression correct?	Yes	Inspect valve timing.
		No	Inspect for causes.
31	Verify test results. • If okay, return to diagnostic index to service any additional symptoms. • If malfunction remains, replace PCM.		

End Of Ste

NO.7 SLOW RETURN TO IDLE

AME418018881W09

7	SLOW RETURN TO IDLE
DESCRIPTION	Engine takes more time than normal to return to idle speed.
POSSIBLE CAUSE	• ECT sensor malfunction • Thermostat is stuck open. • Throttle body malfunction • Air leakage from intake-air system

Diagnostic procedure

STEP	INSPECTION	RESULTS	ACTION
1	Connect WDS or equivalent to DLC-2. Retrieve any continuous memory, KOEO and KOER DTCs. Are there DTCs displayed?	Yes	**DTC is displayed:** Go to appropriate DTC test.
		No	**No DTC is displayed:** Go to next step.
2	Remove thermostat and inspect operation. (See E–16 THERMOSTAT REMOVAL/ INSTALLATION.) (See E–17 THERMOSTAT INSPECTION.) Is thermostat okay?	Yes	ECT and thermostat are okay. Go to next step.
		No	Access ECT PID on WDS or equivalent. Inspect for both ECT PID and temperature gauge on instrument cluster readings. If temperature gauge on instrument cluster indicates normal range but ECT PID is not same as temperature gauge reading, inspect ECT sensor. If temperature gauge on instrument cluster indicates cold range but ECT PID is normal, inspect temperature gauge and heat gauge unit.
3	Is throttle body free of contaminations?	Yes	Inspect for air leakage from intake-air system components while racing engine to higher speed.
		No	Clean or replace throttle body.
4	Verify test results. • If okay, return to diagnostic index to service any additional symptoms. • If malfunction remains, replace PCM.		

End Of Sie

NO.8 ENGINE RUNS ROUGH/ROLLING IDLE

AME418018881W10

8	ENGINE RUNS ROUGH/ROLLING IDLE
DESCRIPTION	• Engine speed fluctuates between specified idle speed and lower speed and engine shakes excessively. • Idle speed is too slow and engine shakes excessively.
POSSIBLE CAUSE	• Air leakage from intake-air system parts • A/C system operation is improper • Spark leakage from high-tension leads • Spark plug malfunction • Purge solenoid valve malfunction • IAC valve improper operation • EGR valve malfunction • Erratic or no signal from CMP sensor • Low engine compression • Improper valve timing • Erratic signal from CKP sensor • Poor fuel quality • PCV valve malfunction • Air cleaner restriction • Restriction in exhaust system • Disconnected electrical connectors • Inadequate fuel pressure • Fuel pump body mechanical malfunction • Improper load signal input • Fuel line restriction or clogging • Improper fuel injection control operation • Fuel leakage from fuel injector • Fuel injector clogging • Engine overheating • Vacuum leakage • Pressure regurator malfunction **Warning** **The following troubleshooting flow chart contains fuel system diagnosis and repair procedures. Read following warnings before performing the fuel system services:** • **Fuel vapor is hazardous. It can easily ignite, causing serious injury and damage. Always keep sparks and flames away from fuel.** • **Fuel line spills and leakage are dangerous. Fuel can ignite and cause serious injuries or death and damage. Fuel can also irritate skin and eyes. To prevent this, always complete "BEFORE REPAIR PROCEDURE" and "AFTER REPAIR PROCEDURE" described in this manual.** **(See F3–57 BEFORE REPAIR PROCEDURE.)** **(See F3–57 AFTER REPAIR PROCEDURE.)** **Caution** • **Disconnecting/connecting quick release connector without cleaning it may possibly cause damage to fuel pipe and quick release connector. Always clean quick release connector joint area before disconnecting/connecting, and make sure that it is free of foreign material.**

Diagnostic procedure

STEP	INSPECTION	RESULTS	ACTION
1	Verify following: • External fuel shut off or accessory (kill switch, alarm etc.) • Fuel quality (e.g. proper octane, contamination, winter/summer blend) • No air leakage from intake-air system • Proper sealing of intake manifold and components attached to intake manifold: EGR valve, IAC valve • Ignition wiring • Electrical connections • Fuses • Smooth operation of throttle valve Are all items okay?	Yes	Go to next step.
		No	Service as necessary. Repeat Step 1.
2	Connect WDS or equivalent to DLC-2. Retrieve any continuous memory, KOEO and KOER. Are there any DTCs displayed?	Yes	**DTC is displayed:** Go to appropriate DTC test.
		No	**No DTC is displayed:** Go to next step.
3	Is engine overheating?	Yes	Go to symptom troubleshooting "No.17 Cooling system concerns - Overheating".
		No	Go to next step.
4	**Note** • Following test is for engine running rough idle with A/C on concerns. If other symptoms exist, go to next step. Connect pressure gauge to A/C low and high pressure side lines. Start engine and run it at idle. Turn A/C switch on. Measure low side and high side pressures. Are pressures within specifications?	Yes	Go to next step.
		No	If A/C is always on, go to symptom troubleshooting "No.24 A/C is always on or A/C compressor runs continuously". For other symptoms, inspect following: • Refrigerant charging amount • Condenser fan operation
5	**Note** • Following test is for engine running rough with P/S on. If other symptoms exist, go to next step. Start engine and run it at idle. Access PSP PID. Inspect if PSP PID is on while turning steering wheel right to left. Is PSP PID okay?	Yes	Inspect power steering pressure switch operation and wiring harness between P/S pressure switch connector and PCM connector terminal 1Z.
		No	Go to next step.
6	Visually inspect CKP sensor and teeth of crankshaft pulley. Are CKP sensor and teeth of crankshaft pulley okay?	Yes	Go to next step.
		No	Replace malfunctioning parts.
7	Measure gap between CKP sensor and teeth of crankshaft pulley. **Specification** **0.5—1.5 mm {0.020—0.075 in}** Is gap within specification?	Yes	Go to next step.
		No	Adjust CKP sensor.
8	Inspect for cracks on high-tension leads. Are there any cracks on high-tension leads?	Yes	Repair suspected high-tension leads.
		No	Go to next step.

STEP	INSPECTION	RESULTS	ACTION
9	Inspect spark plug condition. Is spark plug wet, covered with carbon or grayish white?	Yes	**Spark plug is wet or covered with carbon:** Inspect for fuel leakage from injector. **Spark plug is grayish white:** Inspect for clogged fuel injector.
		No	Install spark plugs on original cylinders. Go to next step.
10	Start engine and disconnect IAC valve connector. Does rpm drop or engine stall?	Yes	Go to next step.
		No	Inspect IAC valve and wiring harness.
11	Install fuel pressure gauge between fuel pipe and fuel distributor. Start engine and run it at idle. Measure fuel line pressure at idle. Is fuel line pressure correct at idle? (See F3–58 FUEL LINE PRESSURE INSPECTION)	Yes	Go to next step.
		No	**Zero or low:** Inspect for clogged fuel line. If okay, replace fuel pump unit. **High:** Replace fuel pump unit.
12	Visually inspect for fuel leakage at fuel injector, O-ring, and fuel line. Service as necessary. Does fuel line pressure hold after ignition switch is turned off? (See F3–58 FUEL LINE PRESSURE INSPECTION)	Yes	Go to next step.
		No	Inspect fuel injector. If fuel injector is okay, replace fuel pump unit.
13	Connect WDS or equivalent to DLC-2. Start the engine and run it at idle. Access O2S11 PID. Is O2S11 PID okay? • **More than 0.45 V** when accelerator pedal is suddenly depressed: rich condition • **Less than 0.45 V** during fuel cut: lean condition	Yes	Go to next step.
		No	Inspect and repair or replace faulty HO2S, harness, connector or terminal, then go to next step.
14	Disconnect vacuum hose between purge solenoid valve and intake manifold from purge solenoid valve side. Plug opening end of vacuum hose. Start engine. Does engine condition improve?	Yes	Inspect if purge solenoid valve sticks open mechanically. Inspect EVAP control system.
		No	Go to next step.
15	Remove and shake PCV valve. Does PCV valve rattle?	Yes	Go to next step.
		No	Replace PCV valve.
16	Inspect for restriction in exhaust system. Is there any restriction?	Yes	Inspect exhaust system.
		No	Go to next step.
17	Visually inspect CMP sensor and teeth of camshaft. Are CMP sensor and teeth of camshaft okay?	Yes	Go to next step.
		No	Replace malfunctioning parts.
18	Inspect engine condition while tapping EGR valve housing. Does engine condition improve?	Yes	Replace EGR valve.
		No	Go to next step.
19	Is engine compression correct?	Yes	Inspect valve timing.
		No	Inspect for causes.
20	Verify test results. • If okay, return to diagnostic index to service any additional symptoms. • If malfunction remains, replace PCM.		

End Of Ste

NO.9 FAST IDLE/RUNS ON

AME418018881W11

9	FAST IDLE/RUNS ON
DESCRIPTION	• Engine speed continues at fast idle after warm-up. • Engine runs after ignition switch is turned off.
POSSIBLE CAUSE	• ECT sensor malfunction • Air leakage from intake-air system • Throttle body malfunction • Accelerator cable free play misadjustment • Cruise control cable misadjustment • Improper load signal input

Diagnostic procedure

STEP	INSPECTION	RESULTS	ACTION
1	Connect WDS or equivalent to DLC-2. Access ECT PID. Start and warm up engine to normal operating temperature. Is ECT PID reading between **82—112°C {180—234°F}**?	Yes	Go to next step.
		No	**ECT PID is higher than 112°C {234°F}:** Go to symptom troubleshooting "No.17 Cooling system concerns - Overheating". **ECT PID is less than 82°C {180°F}:** Go to symptom troubleshooting "No.18 Cooling system concerns - Runs cold".
2	Connect WDS or equivalent to DLC-2. Retrieve any continuous memory DTCs. Are there any DTCs displayed?	Yes	**DTC is displayed:** Go to appropriate DTC test.
		No	**No DTC is displayed:** Go to next step.
3	Connect WDS or equivalent to DLC-2. Access ACSW, COLP, CPP, CPP/PNP and PSP PIDs. Monitor each PID. (See F3–83 PCM INSPECTION.) Are PIDs okay?	Yes	Go to next step.
		No	ACSW PID: Inspect A/C switch, refrigerant pressure switch and fan switch. COLP PID: Inspect refrigerant pressure switch (middle pressure). CPP PID: Inspect clutch switch. CPP/PNP PID: Inspect neutral switch. PSP PID: Inspect P/S pressure switch.
4	Is there air leakage felt or heard at intake-air system components while racing engine to higher speed?	Yes	Repair or replace parts if necessary.
		No	Verify accelerator cable free play. (See F3–55 ACCELERATOR CABLE INSPECTION.)
5	Verify test results. • If okay, return to diagnostic index to service any additional symptoms. • If malfunction remains, replace PCM.		

End Of Sie

NO.10 LOW IDLE/STALLS DURING DECELERATION

AME418018881W12

10	LOW IDLE/STALLS DURING DECELERATION
DESCRIPTION	• Engine stops unexpectedly at beginning of deceleration or recovery from deceleration.
POSSIBLE CAUSE	• Vacuum leakage • IAC valve malfunction • Air leakage from intake-air system • Improper air/fuel mixture ratio control • Evaporative emission control system malfunction • TP sensor misadjustment • TP sensor or related circuit malfunction • MAF sensor or related circuit malfunction • Brake switch or related circuit malfunction • Neutral/clutch switch or related circuit malfunction • Improper A/C magnetic clutch operation

Diagnostic procedure

STEP	INSPECTION	RESULTS	ACTION
1	• Does engine idle rough?	Yes	Go to symptom troubleshooting "No.8 Engine runs rough/rolling idle".
		No	Go to next step.
2	Turn off A/C switch and fan switch. Does A/C magnetic clutch engauge?	Yes	Go to symptom troubleshooting “No.24 A/C is always on or A/C compressor runs continuously.“
		No	Go to next step.
3	Verify following: • Proper routing and no damage of vacuum lines • IAC valve is connected properly. • No air leakage from intake-air system Are all items okay?	Yes	Go to next step.
		No	Service as necessary. Repeat Step 3.
4	Connect WDS or equivalent to DLC-2. Retrieve any continuous memory, KOEO and KOER DTCs. Are there any DTCs displayed?	Yes	**DTC is displayed:** Go to appropriate DTC test.
		No	**No DTC is displayed:** Go to next step.
5	Does idle speed drop or stall when disconnecting IAC valve?	Yes	Go to next step.
		No	Inspect following: • Circuit from IAC valve to PCM connector terminal 4G or 4J for open and short • IAC valve for sticking If okay, go to next step.
6	Disconnect vacuum hose between purge solenoid valve and intake manifold from purge solenoid valve side. Plug opening end of vacuum hose. Drive vehicle. Does engine condition improve?	Yes	Inspect evaporative emission control system.
		No	Go to next step.
7	Connect WDS or equivalent to DLC-2. Access TP, MAF, VSS, BOO, CPP and CPP/PNP PIDs. Monitor each PID while driving vehicle. (See F3–83 PCM INSPECTION.) Are PIDs okay?	Yes	Intermittent concern exists. (See INTERMITTENT CONCERN TROUBLESHOOTING.)
		No	**TP PID:** Inspect TP sensor. **MAF PID:** Inspect MAF sensor. **VSS PID:** Inspect VSS. **BOO PID:** Inspect brake switch. **CPP PID:** Inspect clutch switch. **CPP/PNP PID:** Inspect neutral switch.
8	Verify test results. • If okay, return to diagnostic index to service any additional symptoms. • If malfunction remains, replace PCM.		

End Of Sta

NO.11 ENGINE STALLS/QUITS, ENGINE RUNS ROUGH, MISSES, BUCK/JERK, HESITATION/STUMBLE, SURGES

AME418018881W13

11	**ENGINE STALLS/QUITS — ACCELERATION/CRUISE** **ENGINE RUNS ROUGH — ACCELERATION/CRUISE** **MISSES — ACCELERATION/CRUISE** **BUCK/JERK — ACCELERATION/CRUISE/DECELERATION** **HESITATION/STUMBLE — ACCELERATION** **SURGES — ACCELERATION/CRUISE**
DESCRIPTION	• Engine stops unexpectedly at beginning of acceleration or during acceleration. • Engine stops unexpectedly while cruising. • Engine speed fluctuates during acceleration or cruising. • Engine misses during acceleration or cruising. • Vehicle bucks/jerks during acceleration, cruising, or deceleration. • Momentary pause at beginning of acceleration or during acceleration • Momentary minor irregularity in engine output
POSSIBLE CAUSE	• A/C system operation is improper. • Erratic signal or no signal from CMP sensor • Air leakage from intake-air system parts • Purge solenoid valve malfunction • IAC valve improper operation • EGR valve malfunction • Erratic signal from CKP sensor • Low engine compression • Vacuum leakage • Poor fuel quality • Main relay intermittent malfunction • Throttle body malfunction • Engine overheating • Spark plug malfunction • Improper air/fuel mixture ratio control operation • Improper VTCS operation • Spark leakage from high-tension leads • Air cleaner restriction • PCV valve malfunction • Improper valve timing due to jumping out timing belt • Restriction in exhaust system • Intermittent open or short in fuel body pump circuit • Inadequate fuel pressure • Fuel pump mechanical malfunction • Fuel leakage from fuel injector • Fuel injector clogging • Fuel line restriction or clogging • Pressure regulator malfunction • TP sensor misadjustment • Intermittent open or short of MAF sensor, TP sensor and VSS • Clutch slippage • Improper VTCS operation **Warning** **The following troubleshooting flow chart contains the fuel system diagnosis and repair procedures. Read the following warnings before performing the fuel system services:** • **Fuel vapor is hazardous. It can easily ignite, causing serious injury and damage. Always keep sparks and flames away from fuel.** • **Fuel line spills and leakage are dangerous. Fuel can ignite and cause serious injuries or death and damage. Fuel can also irritate skin and eyes. To prevent this, always complete "BEFORE REPAIR PROCEDURE" and "AFTER REPAIR PROCEDURE" described in this manual.** **(See F3–57 BEFORE REPAIR PROCEDURE.)** **(See F3–57 AFTER REPAIR PROCEDURE.)** **Caution** • **Disconnecting/connecting quick release connector without cleaning it may possibly cause damage to fuel pipe and quick release connector. Always clean quick release connector joint area before disconnecting/connecting, and make sure that it is free of foreign material.**

Diagnostic procedure

STEP	INSPECTION	RESULTS	ACTION
1	Verify for following: • Vacuum connection • Air cleaner element • No air leakage from intake-air system • No restriction of intake-air system • Proper sealing of intake manifold and components attached to intake manifold: such as EGR valve, IAC valve • Ignition wiring • Fuel quality (e.g. proper octane, contamination, winter/summer blend) • Electrical connections • Smooth operation of throttle valve Are all items okay?	Yes	Go to next step.
		No	Service as necessary. Repeat Step 1.
2	Connect WDS or equivalent to DLC-2. Retrieve any continuous memory, KOEO and KOER DTCs. If stall, condition exists retrieve continuous memory and KOEO DTCs. Are there any DTCs displayed?	Yes	**DTC is displayed:** Go to appropriate DTC test.
		No	**No DTC is displayed:** Go to next step.
3	Is engine overheating?	Yes	Go to symptom troubleshooting "No.17 Cooling system concerns - Overheating".
		No	Go to next step.
4	Connect WDS or equivalent to DLC-2. Access RPM, VPWR, MAF, TP and VSS PIDs. Drive vehicle with monitoring PIDs. Are PIDs within specifications? (See F3–83 PCM INSPECTION.)	Yes	Go to next step.
		No	**RPM PID:** Inspect CKP sensor and related harness for such as vibration, intermittent open/short circuit. **VPWR PID:** Inspect for open circuit intermittently. **MAF PID:** Inspect for open circuit of MAF sensor and related wire harness intermittently. **TP PID:** Inspect if output signal from TP sensor changes smoothly. **VSS PID:** Inspect for open circuit of VSS and related wire harness intermittently.
5	Visually inspect CKP sensor and teeth of crankshaft pulley. Are CKP sensor and teeth of crankshaft pulley okay?	Yes	Go to next step.
		No	Replace malfunctioning parts.
6	Measure gap between CKP sensor and teeth of crankshaft pulley. **Specification** **0.5—1.9 mm {0.020—0.075 in}** Is gap within specification?	Yes	Go to next step.
		No	Adjust CKP sensor.
7	Inspect spark plug conditions. Is spark plug wet, covered with carbon or grayish white?	Yes	**Spark plug is wet or covered with carbon:** Inspect for fuel leakage from fuel injector. **Spark plug is grayish white:** Inspect for clogged fuel injector.
		No	Install spark plugs on original cylinders. Go to next step.
8	Remove and shake PCV valve. Does PCV valve rattle?	Yes	Go to next step.
		No	Replace PCV valve.
9	Verify that throttle lever is resting on throttle valve stop screw and/or throttle valve orifice plug. Is lever in correct position?	Yes	Go to next step.
		No	Adjust if necessary.
10	Inspect for restriction in the exhaust system. Is there any restriction?	Yes	Inspect exhaust system.
		No	Go to next step.

STEP	INSPECTION	RESULTS	ACTION
11	Install fuel pressure gauge between fuel pipe and fuel distributor. Connect jumper wire between F/P terminal at DLC-2 in engine compartment and GND. Turn ignition switch to ON position. Is fuel line pressure correct with ignition switch to ON position? (See F3–58 FUEL LINE PRESSURE INSPECTION)	Yes	Go to next step.
		No	**Zero or low:** Inspect for clogged fuel line. If okay, replace fuel pump unit. **High:** Replace fuel pump unit.
12	Visually inspect for fuel leakage at fuel injector O-ring and fuel line. Service as necessary. Is fuel line pressure held after ignition switch is turned off? (See F3–58 FUEL LINE PRESSURE INSPECTION)	Yes	Go to next step.
		No	Inspect fuel injector. If fuel injector is okay, replace fuel pump unit.
13	**Note** • Following test is for engine stalling with A/C on. If other symptom exists, go to next step. Connect a pressure gauge to A/C low and high pressure side lines. Turn A/C on and measure low side and high side pressure. Are pressure within specifications?	Yes	Go to next step.
		No	If A/C is always on, go to symptom troubleshooting "No.24 A/C is always on or A/C compressor runs continuously". For other symptoms, inspect following: • Refrigerant charging amount • Condenser fan operation
14	**Note** • The following test should be performed for symptom with cruise control ON. If other symptoms exist, go to next step. Inspect cruise control system. Is cruise control system okay?	Yes	Go to next step.
		No	Repair or replace malfunctioning parts.
15	Disconnect vacuum hose between purge solenoid valve and intake manifold from purge solenoid valve side. Plug opening end of vacuum hose. Drive vehicle. Does engine condition improve?	Yes	Go to next step. Inspect if purge solenoid valve sticks open mechanically. Inspect evaporative emission control system.
		No	Go to next step.
16	Visually inspect CMP sensor and projections of camshaft pulley. Are CMP sensor and projections of camshaft pulley okay?	Yes	Go to next step.
		No	Replace malfunctioning parts.
17	Inspect VTCS operation. (See F3–273 Variable Tumble Control System (VTCS) Operation Inspection.) Is VTCS okay?	Yes	Go to next step.
		No	Replace or replace malfunctioning parts.
18	Inspect EGR system. (See F3–275 EGR Control System Inspection.) Is EGR system okay?	Yes	Go to next step.
		No	Replace malfunctioning parts.
19	Is engine compression correct?	Yes	Inspect following: • Valve timing • Clutch
		No	Inspect for cause.
20	Verify test results. • If okay, return to diagnostic index to service any additional symptoms. • If malfunction remains, replace PCM.		

End Of Sie

NO.12 LACK/LOSS OF POWER-ACCELERATION/CRUISE

AME418018881W14

12	LACK/LOSS OF POWER — ACCELERATION/CRUISE
DESCRIPTION	Performance is poor under load (e.g., power down when climbing hills).
POSSIBLE CAUSE	• Improper A/C system operation • Erratic signal or no signal from CMP sensor • Air leakage from intake-air system parts • Improper VIS operation • Improper VTCS operation • Purge control solenoid malfunction • EGR valve malfunction • Brake dragging • Erratic signal from CKP sensor • Low engine compression • Vacuum leakage • Poor fuel quality • Spark leakage from high-tension leads • Engine overheating • Throttle body malfunction • Spark plug malfunction • Air cleaner restriction • PCV valve malfunction • Improper valve timing due to jumping out of timing belt • Restriction in exhaust system • Intermittent open or short in fuel pump related circuit • Inadequate fuel pressure • Fuel pump mechanical malfunction • Fuel line restriction or clogging • Fuel leakage from fuel injector • Fuel injector clogging • Intermittent open or short of MAF sensor, TP sensor and VSS • Clutch slippage **Warning** **The following troubleshooting flow chart contains the fuel system diagnosis and repair procedures. Read the following warnings before performing the fuel system services:** • **Fuel vapor is hazardous. It can easily ignite, causing serious injury and damage. Always keep sparks and flames away from fuel.** • **Fuel line spills and leakage are dangerous. Fuel can ignite and cause serious injuries or death and damage. Fuel can also irritate skin and eyes. To prevent this, always complete "BEFORE REPAIR PROCEDURE" and "AFTER REPAIR PROCEDURE" described in this manual.** **(See F3–57 BEFORE REPAIR PROCEDURE.)** **(See F3–57 AFTER REPAIR PROCEDURE.)** **Caution** • **Disconnecting/connecting quick release connector without cleaning it may possibly cause damage to fuel pipe and quick release connector. Always clean quick release connector joint area before disconnecting/connecting, and make sure that it is free of foreign material.**

Diagnostic procedure

STEP	INSPECTION	RESULTS	ACTION
1	Verify following: • Vacuum connection • Air cleaner element • No air leakage from intake-air system • No restriction of intake-air system • Proper sealing of intake manifold and components attached to intake manifold; such as EGR valve, IAC valve • Fuel quality (e.g. proper octane, contamination, winter/summer blend) Are all items okay?	Yes	Go to next step.
		No	Service as necessary. Repeat Step 1.
2	Connect WDS or equivalent to DLC-2. Retrieve any continuous memory, KOEO and KOER DTCs. If engine stall condition exists, retrieve continuous memory and KOEO DTCs. Are there any DTCs displayed?	Yes	**DTC is displayed:** Go to appropriate DTC test.
		No	**No DTC is displayed:** Go to next step.

STEP	INSPECTION	RESULTS	ACTION
3	Is engine overheating?	Yes	Go to symptom troubleshooting "No.17 Cooling system concerns - Overheating".
		No	Go to next step.
4	Connect WDS or equivalent to DLC-2. Access RPM, MAF, TP and VSS PIDs. Drive vehicle while monitoring PIDs. Are PIDs within specifications? (See F3–83 PCM INSPECTION.)	Yes	Go to next step.
		No	**RPM PID:** Inspect CKP sensor and related wiring harness for vibration and/or intermittent open/short circuit. **MAF PID:** Inspect for intermittent open circuit of MAF sensor and related wiring harness. **TP PID:** Inspect if TP sensor output increases smoothly. **VSS PID:** Inspect for intermittent open circuit of VSS and related wiring harness.
5	Visually inspect CKP sensor and teeth of crankshaft pulley. Are CKP sensor and teeth of crankshaft pulley okay?	Yes	Go to next step.
		No	Replace malfunctioning parts.
6	Measure gap between CKP sensor and teeth of crankshaft pulley. **Specification** **0.5—1.9 mm {0.020—0.075 in}** Is gap within specification?	Yes	Go to next step.
		No	Adjust CKP sensor.
7	Inspect spark plug condition. Is spark plug wet, covered with carbon or grayish white?	Yes	**Spark plug is wet or covered with carbon:** Inspect for fuel leakage from fuel injector. **Spark plug is grayish white:** Inspect for clogged fuel injector.
		No	Install spark plugs on original cylinders. Go to next step.
8	Remove and shake PCV valve. Does PCV valve rattle?	Yes	Go to next step.
		No	Replace PCV valve.
9	Inspect for restriction in exhaust system. Is there any restriction?	Yes	Inspect exhaust system.
		No	Go to next step.
10	Install fuel pressure gauge between fuel pipe and fuel distributor. Connect jumper wire between F/P terminal at DLC-2 in engine compartment and GND. Turn ignition switch to ON position. Is fuel line pressure correct with ignition switch to ON position? (See F3–58 FUEL LINE PRESSURE INSPECTION)	Yes	Go to next step.
		No	**Zero or low:** Inspect for clogged fuel line. If okay, replace fuel pump unit. **High:** Replace fuel pump unit.
11	Inspect VTCS operation. (See F3–273 Variable Tumble Control System (VTCS) Operation Inspection.) Does VTCS work properly?	Yes	Go to next step.
		No	Repair or replace malfunctioning parts.
12	Inspect VIS operation. (See F3–273 VIS Operation Inspection.) Does VIS work properly?	Yes	Go to next step.
		No	Repair or replace malfunctioning parts.
13	**Note** • Following test is for engine stalling with A/C on concern. If other symptoms exist, go to next step. Connect pressure gauge to A/C low and high side pressure lines. Turn A/C on and measure low side and high side pressures. Are pressures within specifications?	Yes	Go to next step.
		No	If A/C is always on, go to symptom troubleshooting "No.24 A/C is always on or A/C compressor runs continuously". For other symptoms, inspect following: • Refrigerant charging amount • Condenser fan operation
14	Inspect for A/C cut-off operation. (See F3–276 A/C Cut-off Control System Inspection.) Does A/C cut-off work properly?	Yes	Go to next step.
		No	Inspect A/C cut-off system components.

STEP	INSPECTION	RESULTS	ACTION
15	Disconnect vacuum hose between purge solenoid valve and intake manifold from purge solenoid valve side. Plug opening end of vacuum hose. Drive vehicle. Does engine condition improve?	Yes	Inspect if purge solenoid valve is sticks open mechanically. Inspect evaporative emission control system.
		No	Go to next step.
16	Visually inspect CMP sensor and projections of camshaft pulley. Are CMP sensor and projections of camshaft pulley okay?	Yes	Go to next step.
		No	Replace malfunctioning parts.
17	Inspect EGR system. (See F3–275 EGR Control System Inspection.) Is EGR system okay?	Yes	Go to next step.
		No	Replace malfunctioning parts.
18	Is engine compression correct?	Yes	Inspect following: • Valve timing • Clutch • Brake system for dragging
		No	Inspect for cause.
19	Verify test results. • If okay, return to diagnostic index to service any additional symptoms. • If malfunction remains, replace PCM.		

End Of Sre

NO.13 KNOCKING/PINGING-ACCELERATION/CRUISE

AME418018881W15

13	KNOCKING/PINGING - ACCELERATION/CRUISE
DESCRIPTION	Sound is produced when air/fuel mixture is ignited by something other than spark plug (e.g., hot spot in combustion chamber).
POSSIBLE CAUSE	• Engine overheating due to cooling system malfunction • ECT sensor malfunction • IAT sensor malfunction • MAF sensor malfunction • Knock sensor malfunction • Erratic signal from CMP sensor • Inadequate engine compression • Inadequate fuel pressure **Warning** **The following troubleshooting flow chart contains the fuel system diagnosis and repair procedures. Read the following warnings before performing the fuel system services:** • **Fuel vapor is hazardous. It can easily ignite, causing serious injury and damage. Always keep sparks and flames away from fuel.** • **Fuel line spills and leakage are dangerous. Fuel can ignite and cause serious injuries or death and damage. Fuel can also irritate skin and eyes. To prevent this, always complete "BEFORE REPAIR PROCEDURE" and "AFTER REPAIR PROCEDURE" described in this manual.** **(See F3–57 BEFORE REPAIR PROCEDURE.)** **(See F3–57 AFTER REPAIR PROCEDURE.)** **Caution** • **Disconnecting/connecting quick release connector without cleaning it may possibly cause damage to fuel pipe and quick release connector. Always clean quick release connector joint area before disconnecting/connecting, and make sure that it is free of foreign material.**

Diagnostic procedure

STEP	INSPECTION	RESULTS	ACTION
1	Connect WDS or equivalent to DLC-2. Access ECT PID. Verify ECT PID is **less than 116°C {241°F}** during driving. Is ECT PID less than specification?	Yes	Go to next step.
		No	Inspect cooling system for cause of overheating.
2	Connect WDS or equivalent to DLC-2. Access IAT, MAF and SPARKADV PIDs. Monitor each PID. (See F3–83 PCM INSPECTION.) Are PIDs okay?	Yes	Go to next step.
		No	**IAT PID**: Inspect IAT sensor **MAF PID**: Inspect MAF sensor **SPARKADV PID**: Inspect CMP sensor and knock sensor.

STEP	INSPECTION	RESULTS	ACTION
3	Connect WDS or equivalent to DLC-2. Retrieve any continuous memory, KOEO and KOER DTCs. Are there any DTCs displayed?	Yes	**DTC is displayed:** Go to appropriate DTC test.
		No	**No DTC is displayed:** Go to next step.
4	Is engine compression correct?	Yes	Go to next step.
		No	Inspect for cause.
5	Install fuel pressure gauge between fuel pipe and fuel distributor. Start engine and run it at idle. Measure fuel line pressure at idle. Is fuel line pressure correct at idle? (See F3–58 FUEL LINE PRESSURE INSPECTION)	Yes	Inspect ignition timing.
		No	**Zero or low:** Inspect for clogged fuel line. If okay, replace fuel pump unit. **High:** Replace fuel pump unit.
6	Verify test results. • If okay, return to diagnostic index to service any additional symptoms. • If malfunction remains, replace PCM.		

End Of Ste

NO.14 POOR FUEL ECONOMY

AME418018881W16

14	POOR FUEL ECONOMY
DESCRIPTION	Fuel economy is unsatisfactory.
POSSIBLE CAUSE	• Contaminated air cleaner element • VIS malfunction • Engine cooling system malfunction • Weak spark • Poor fuel quality • Erratic or no signal from CMP sensor • Clutch slippage • VTCS malfunction • Improper coolant level • Inadequate fuel pressure • Spark plug malfunction • PCV valve malfunction • Brake dragging • Improper valve timing due to jumping out of timing belt • Contaminated MAF sensor • Improper engine compression • Exhaust system clogging **Warning** **The following troubleshooting flow chart contains fuel system diagnosis and repair procedures. Read following warnings before performing fuel system services:** • **Fuel vapor is hazardous. It can easily ignite, causing serious injury and damage. Always keep sparks and flames away from fuel.** • **Fuel line spills and leakage are dangerous. Fuel can ignite and cause serious injuries or death and damage. Fuel can also irritate skin and eyes. To prevent this, always complete "BEFORE REPAIR PROCEDURE" and "AFTER REPAIR PROCEDURE" described in this manual.** **(See F3–57 BEFORE REPAIR PROCEDURE.)** **(See F3–57 AFTER REPAIR PROCEDURE.)** **Caution** • **Disconnecting/connecting quick release connector without cleaning it may possibly cause damage to fuel pipe and quick release connector. Always clean quick release connector joint area before disconnecting/connecting, and make sure that it is free of foreign material.**

Diagnostic procedure

STEP	INSPECTION	RESULTS	ACTION
1	Inspect for following: • Air cleaner element for contamination • Fuel quality • Coolant level • Brake dragging • Clutch slippage Are all items okay?	Yes	Go to next step.
		No	Service as necessary. Repeat Step 1.
2	Connect WDS or equivalent to DLC-2. Retrieve any continuous memory, KOEO and KOER DTCs. Are there any DTCs displayed?	Yes	**DTC is displayed:** Go to appropriate DTC test.
		No	**No DTC is displayed:** Go to next step.
3	Access ECT PID. Drive vehicle while monitoring PID. (See F3–83 PCM INSPECTION.) Is PID within specification?	Yes	Go to next step.
		No	Inspect for coolant leakage, cooling fan and condenser fan operations or thermostat operation.
4	Is strong blue spark visible at each disconnected high-tension lead while cranking engine?	Yes	Inspect for following: • Spark plugs malfunction • CMP sensor is improperly installed. • Trigger wheel damage on camshaft • Open or short circuit on CMP sensor • Open or short circuit between CMP sensor and PCM terminal 2J or 2M Repair or replace malfunctioning parts. If okay, go to next step.
		No	Inspect following: • High-tension leads • Ignition coil and connector
5	Install fuel pressure gauge between fuel pipe and fuel distributor. Start engine and run it at idle. Measure fuel line pressure at idle. Is fuel line pressure correct at idle? (See F3–58 FUEL LINE PRESSURE INSPECTION)	Yes	Go to next step.
		No	**Zero or low:** Inspect for clogged fuel line. If okay, replace fuel pump unit **High:** Replace fuel pump unit.
6	Inspect for VTCS operation. (See F3–273 Variable Tumble Control System (VTCS) Operation Inspection.) Does VTCS work properly?	Yes	Go to next step.
		No	Repair or replace malfunctioning parts.
7	Inspect for VIS operation. (See F3–273 VIS Operation Inspection.) Does VIS work properly?	Yes	Go to next step.
		No	Repair or replace malfunctioning parts.
8	Remove and shake PCV valve. Does PCV valve rattle?	Yes	Go to next step.
		No	Replace PCV valve.
9	Inspect for restriction in the exhaust system. Is there any restriction?	Yes	Inspect exhaust system.
		No	Go to next step.
10	Inspect for contaminated MAF sensor. Is there any contamination?	Yes	Go to next step.
		No	Inspect for cause.
11	Inspect MAF sensor for contamination. Is there any contamination?	Yes	Replace MAF sensor.
		No	Go to next step.
12	Is engine compression correct?	Yes	Inspect valve timing.
		No	Inspect for cause.
13	Verify test results. • If okay, return to diagnostic index to service any additional symptoms. • If malfunction remains, replace PCM.		

End Of Sta

NO.15 EMISSION COMPLIANCE

AME418018881W17

15	EMISSION COMPLIANCE
DESCRIPTION	Fails emissions test.
POSSIBLE CAUSE	• Vacuum lines leakage or blockage • Cooling system malfunction • Spark plug malfunction • Leakage from intake manifold • Erratic or no signal from CMP sensor • Inadequate fuel pressure • PCV valve malfunction or incorrect valve installation • EGR valve malfunction • Exhaust system clogging • Fuel tank ventilation system malfunction • Charcoal canister damage • Air cleaner element clogging or restriction • Throttle body malfunction • Spark leakage from high-tension leads • Improper air/fuel mixture ratio control operation • Catalyst converter malfunction • Engine internal parts malfunction • Excessive carbon is built up in combustion chamber • Improper engine compression • Improper valve timing **Warning** **The following troubleshooting flow chart contains fuel system diagnosis and repair procedures. Read following warnings before performing fuel system services:** • **Fuel vapor is hazardous. It can easily ignite, causing serious injury and damage. Always keep sparks and flames away from fuel.** • **Fuel line spills and leakage are dangerous. Fuel can ignite and cause serious injuries or death and damage. Fuel can also irritate skin and eyes. To prevent this, always complete "BEFORE REPAIR PROCEDURE" and "AFTER REPAIR PROCEDURE" described in this manual.** **(See F3–57 BEFORE REPAIR PROCEDURE.)** **(See F3–57 AFTER REPAIR PROCEDURE.)** **Caution** • **Disconnecting/connecting quick release connector without cleaning it may possibly cause damage to fuel pipe and quick release connector. Always clean quick release connector joint area before disconnecting/connecting, and make sure that it is free of foreign material.**

Diagnostic procedure

STEP	INSPECTION	RESULTS	ACTION
1	Inspect for following: • Vacuum lines for leakage or blockage • Electrical connections • Proper maintenance schedule followed • Intake-air system and air cleaner element concerns: obstructions, leakage or dirtiness Are all items okay?	Yes	Go to next step.
		No	Service as necessary. Repeat Step 1.
2	Connect WDS or equivalent to DLC-2. Retrieve any continuous memory, KOEO and KOER DTCs. Are there any DTCs displayed?	Yes	**DTC is displayed:** Go to appropriate DTC test.
		No	**No DTC is displayed:** Go to next step.
3	Is any other drivability concern present?	Yes	Go to appropriate symptom troubleshooting.
		No	Go to next step.
4	Connect WDS or equivalent to DLC-2. Access ECT PID. Warm up engine and run it at idle. Verify ECT PID is correct. (See F3–83 PCM INSPECTION.) Is ECT PID correct?	Yes	Go to next step.
		No	Inspect for coolant leakage, cooling fan and condenser fan operation or thermostat operation.

STEP	INSPECTION	RESULTS	ACTION
5	Is strong blue spark visible at each disconnected high-tension lead while cranking engine?	Yes	Inspect for following: • Spark plugs malfunction • Improperly installed CMP sensor • Damage of trigger wheel on camshaft • Open or short circuit on CMP sensor • Open or short circuit between CMP sensor and PCM terminal 2J or 2M Repair or replace malfunctioning parts. If okay, go to next step.
		No	Inspect following: • High-tension leads • Ignition coil and connector
6	Install fuel pressure gauge between fuel pipe and fuel distributor. Start engine and run it at idle. Measure fuel line pressure at idle. Is fuel line pressure correct at idle? (See F3–58 FUEL LINE PRESSURE INSPECTION)	Yes	Go to next step.
		No	**Zero or low:** Inspect for clogged fuel line. If okay, replace fuel pump unit. **High:** Replace fuel pump unit.
7	Remove and shake PCV valve. Does PCV valve rattle?	Yes	Go to next step.
		No	Replace PCV valve.
8	Inspect for fuel saturation inside charcoal canister. Is excess amount of liquid fuel present in canister?	Yes	Replace charcoal canister.
		No	Inspect fuel tank vent system. Then, go to next step.
9	Is there restriction in exhaust system?	Yes	Inspect exhaust system.
		No	Inspect EGR system. (See F3–275 EGR Control System Inspection.)
10	Inspect threeway catalytic converter. (See F3–79 THREE-WAY CATALYTIC CONVERTER (TWC) INSPECTION.) Is threeway catalytic converter okay?	Yes	Inspect EGR system. (See F3–275 EGR Control System Inspection.)
		No	Replace threeway catalytic converter.
11	Verify test results. • If okay, return to diagnostic index to service any additional symptoms. • If malfunction remains, replace PCM.		

End Of Sta

NO.16 HIGH OIL CONSUMPTION/LEAKAGE

AME418018881W18

16	HIGH OIL CONSUMPTION/LEAKAGE
DESCRIPTION	Oil consumption is excessive.
POSSIBLE CAUSE	• PCV valve malfunction • Improper dipstick • Improper engine oil viscosity • Engine internal parts malfunction

Diagnostic procedure

STEP	INSPECTION	RESULTS	ACTION
1	Remove and shake PCV valve. Does PCV valve rattle?	Yes	Go to next step.
		No	Replace PCV valve.
2	Inspect for following: • External leakage • Proper dipstick • Proper engine oil viscosity Are all items okay?	Yes	Inspect internal engine parts such as valves, valve guides, valve stem seals, cylinder head drain passage, and piston rings.
		No	Service as necessary. Repeat Step 2.
3	Verify test results. • If okay, return to diagnostic index to service any additional symptoms. • If malfunction remains, replace PCM.		

End Of Sta

NO.17 COOLING SYSTEM CONCERNS-OVERHEATING

AME418018881W19

17	COOLING SYSTEM CONCERNS -OVERHEATING
DESCRIPTION	Engine runs at higher than normal temperature/overheats.
POSSIBLE CAUSE	• Improper coolant level • Blown fuses • Coolant leakage • Excessive A/C system pressure • A/C system operation is improper • Improper water/anti-freeze mixture • Fans reverse rotation • Poor radiator condition • Thermostat malfunction • Radiator hoses damage • Condenser fan is inoperative. • Improper or damaged radiator cap • Cooling fan is inoperative. • Coolant overflow system malfunction • Improper tension of drive belt • Drive belt damage

Diagnostic procedure

STEP	INSPECTION	RESULTS	ACTION
1	Inspect following: • Engine coolant level • Coolant leakage • Water and anti-freeze mixture • Radiator condition • Collapsed or restricted radiator hoses • Radiator pressure cap • Overflow system • Fan rotational direction • Fuses Are all items okay?	Yes	Go to next step.
		No	Service as necessary. Repeat Step 1.
2	Connect WDS or equivalent to DLC-2. Retrieve any continuous memory, KOEO and KOER DTCs. Are there any DTCs displayed?	Yes	**DTC is displayed:** Go to appropriate DTC test.
		No	**No DTC is displayed:** Go to next step.
3	Start engine and run it at idle speed. Turn A/C switch on. Does A/C compressor engage?	Yes	Go to Step 5.
		No	Inspect for following and repair or replace as necessary: • Refrigerant charging amount • Open circuit between A/C relay and PCM terminal 4O • Seized A/C magnetic clutch • A/C magnetic clutch malfunction If all items are okay, go to next step.
4	Connect WDS or equivalent to DLC-2. Access ACSW PID. Start engine and run it at idle speed. Turn A/C switch on. Does ACSW PID read ON?	Yes	Go to next step.
		No	Inspect following: • Refrigerant pressure switch operation • A/C switch is stuck open. • Open or short circuit between refrigerant pressure switch and PCM terminal 1AC • Open circuit of blower motor fan switch and resistor (if blower motor does not operate) • Evaporator temperature sensor and A/C amplifier
5	Inspect cooling fan control system operation. (See F3–277 Cooling Fan Motors Operation Inspection.) Does cooling fan control system work properly?	Yes	Go to next step.
		No	Repair or replace malfunctioning parts.

STEP	INSPECTION	RESULTS	ACTION
6	Is drive belt okay?	Yes	Go to next step.
		No	Replace drive belt.
7	Is there any leakage around heater unit in passenger compartment?	Yes	Inspect and service heater for leakage.
		No	Go to next step.
8	Is there any leakage at coolant hoses and/or radiator?	Yes	Replace malfunctioning part.
		No	Go to next step.
9	Cool down the engine. Remove thermostat and inspect operation. (See E–16 THERMOSTAT REMOVAL/ INSTALLATION.) (See E–17 THERMOSTAT INSPECTION.) Is thermostat okay?	Yes	Engine coolant temperature and thermostat are okay, inspect engine block for leakage or blockage.
		No	Access ECT PID. Inspect for both ECT PID and temperature gauge readings. If temperature gauge on instrument cluster indicates normal range but ECT PID is not same as temperature gauge reading, inspect ECT sensor. If temperature gauge on instrument cluster indicates overheating but ECT PID is normal, inspect temperature gauge and heat gauge unit.
10	Verify test results. • If okay, return to diagnostic index to service any additional symptoms. • If malfunction remains, replace PCM.		

F3

End Of Ste

NO.18 COOLING SYSTEM CONCERNS-RUNS COLD

AME418018881W20

18	COOLING SYSTEM CONCERNS -RUNS COLD
DESCRIPTION	Engine takes excessive period for reaching normal operating temperature.
POSSIBLE CAUSE	• Thermostat malfunction • Condenser fan system malfunction • Cooling fan system malfunction

Diagnostic procedure

STEP	INSPECTION	RESULTS	ACTION
1	Is customer complaint "Lack of passenger compartment heat" only?	Yes	Inspect A/C and heater system.
		No	Go to next step.
2	Does engine speed continue at fast idle?	Yes	Go to symptom troubleshooting "No.9 Fast idle/runs on".
		No	Go to next step.
3	Remove thermostat and inspect operation. (See E–16 THERMOSTAT REMOVAL/ INSTALLATION.) (See E–17 THERMOSTAT INSPECTION.) Is thermostat okay?	Yes	Go to next step.
		No	Replace thermostat.
4	Inspect cooling fan control system operation. (See F3–277 Cooling Fan Motors Operation Inspection.) Does cooling fan control system work properly?	Yes	Access ECT PID. Inspect for both ECT PID and temperature gauge on instrment cluster readings. If temperature gauge on instrument cluster indicates normal range but ECT PID is not same as temperature gauge reading, inspect ECT sensor. If temperature gauge on instrument cluster indicates cold range but ECT PID is normal, inspect temperature gauge and heat gauge unit.
		No	Repair or replace malfunctioning part.
5	Verify test results. • If okay, return to diagnostic index to service any additional symptoms. • If malfunction remains, replace PCM.		

End Of Ste

NO.19 EXHAUST SMOKE

AME418018881W21

19	EXHAUST SMOKE
DESCRIPTION	Blue, black, or white smoke from exhaust system
POSSIBLE CAUSE	**Blue smoke (Burning oil):** • PCV valve malfunction • Engine internal oil leakage **White smoke (Water in combustion):** • Cooling system malfunction (coolant loss) • Engine internal coolant leakage **Black smoke (Rich fuel mixture):** • Air cleaner restriction • Intake-air system is collapsed or restricted. • Fuel return line is restricted. • Excessive fuel pressure • Improper engine compression • Injector fuel leakage • Ignition system malfunction **Warning** **The following troubleshooting flow chart contains fuel system diagnosis and repair procedures. Read following warnings before performing fuel system services:** • **Fuel vapor is hazardous. It can easily ignite, causing serious injury and damage. Always keep sparks and flames away from fuel.** • **Fuel line spills and leakage are dangerous. Fuel can ignite and cause serious injuries or death and damage. Fuel can also irritate skin and eyes. To prevent this, always complete "BEFORE REPAIR PROCEDURE" and "AFTER REPAIR PROCEDURE" described in this manual.** **(See F3–57 BEFORE REPAIR PROCEDURE.)** **(See F3–57 AFTER REPAIR PROCEDURE.)** **Caution** • **Disconnecting/connecting quick release connector without cleaning it may possibly cause damage to fuel pipe and quick release connector. Always clean quick release connector joint area before disconnecting/connecting, and make sure that it is free of foreign material.**

Diagnostic procedure

STEP	INSPECTION	RESULTS	ACTION
1	What color is smoke coming from exhaust system?	Blue	Burning oil is indicated. Go to next step.
		White	Water in combustion is indicated. Go to Step 3.
		Black	Rich fuel mixture is indicated. Go to Step 4.
2	Remove and shake PCV valve. Does PCV valve rattle?	Yes	Inspect for following: • Damaged valve guide, stems or valve seals • Blocked oil drain passage in cylinder head • Piston ring is not seated, seized or worn. • Damaged cylinder bore If other drivability symptoms are present, return to diagnostic index to service any additional symptoms.
		No	Replace PCV valve.
3	Does cooling system hold pressure?	Yes	Inspect for following: • Cylinder head gasket leakage • Intake manifold gasket leakage • Cracked or porous engine block If other drivability symptoms are present, return to diagnostic index to service any additional symptoms.
		No	Inspect for cause.
4	Inspect for following: • Air cleaner restriction • Collapsed or restricted intake-air system • Restricted fuel return line Are all items okay?	Yes	Go to next step.
		No	Service as necessary. Repeat Step 4.
5	Connect WDS or equivalent to DLC-2. Retrieve any continuous memory, KOEO and KOER DTCs. Are there any DTCs displayed?	Yes	**DTC is displayed:** Go to appropriate DTC test.
		No	**No DTC is displayed:** Go to next step.

STEP	INSPECTION	RESULTS	ACTION
6	Install fuel pressure gauge between fuel pipe and fuel distributor. Start engine and run it at idle. Measure fuel line pressure at idle. Is fuel line pressure correct at idle? (See F3–58 FUEL LINE PRESSURE INSPECTION)	Yes	Go to next step.
		No	**Zero or low:** • Inspect for clogged fuel line. • If okay, replace fuel pump unit. **High:** • Replace fuel pump unit.
7	Is strong blue spark visible at each disconnected high-tension lead while cranking engine?	Yes	Inspect spark plugs and CMP sensor.
		No	Inspect following: • High-tension leads • Ignition coil and connector
8	Verify test results. • If okay, return to diagnostic index to service any additional symptoms. • If malfunction remains, replace PCM.		

End Of Sie

NO.20 FUEL ODOR (IN ENGINE COMPARTMENT)

AME418018881W22

20	FUEL ODOR (IN ENGINE COMPARTMENT)
DESCRIPTION	Gasoline fuel smell or visible leakage
POSSIBLE CAUSE	• Excessive fuel pressure • Purge solenoid valve malfunction • Fuel tank vent system blockage • Charcoal canister malfunction • Fuel leakage from fuel system **Warning** **The following troubleshooting flow chart contains fuel system diagnosis and repair procedures. Read following warnings before performing fuel system services:** • **Fuel vapor is hazardous. It can easily ignite, causing serious injury and damage. Always keep sparks and flames away from fuel.** • **Fuel line spills and leakage are dangerous. Fuel can ignite and cause serious injuries or death and damage. Fuel can also irritate skin and eyes. To prevent this, always complete "BEFORE REPAIR PROCEDURE" and "AFTER REPAIR PROCEDURE" described in this manual.** **(See F3–57 BEFORE REPAIR PROCEDURE.)** **(See F3–57 AFTER REPAIR PROCEDURE.)** **Caution** • **Disconnecting/connecting quick release connector without cleaning it may possibly cause damage to fuel pipe and quick release connector. Always clean quick release connector joint area before disconnecting/connecting, and make sure that it is free of foreign material.**

Diagnostic procedure

STEP	INSPECTION	RESULTS	ACTION
1	Visually inspect for fuel leakage at fuel injector O-ring and fuel line. Service as necessary. Install fuel pressure gauge between fuel pipe and fuel distributor. Start engine and run it at idle. Measure fuel line pressure at idle. Is fuel line pressure correct at idle? (See F3–58 FUEL LINE PRESSURE INSPECTION)	Yes	Go to next step.
		No	Replace fuel pump unit.
2	Inspect for blockage/restriction or open between engine vacuum port and charcoal canister. Inspect for blockage in fuel tank vent system. Is fault indicated?	Yes	Replace vacuum hose.
		No	Go to next step.
3	Inspect purge solenoid valve. (See F3–76 PURGE SOLENOID VALVE INSPECTION.) Is solenoid operating properly?	Yes	Go to next step.
		No	Replace purge solenoid valve.

STEP	INSPECTION	RESULTS	ACTION
4	Connect WDS or equivalent to DLC-2. Retrieve any continuous memory, KOEO and KOER DTCs. Are there any DTCs displayed?	Yes	**DTC is displayed:** Go to appropriate DTC test.
		No	**No DTC is displayed:** Inspect charcoal canister for fuel saturation. If excess amount of liquid fuel is present, replace charcoal canister.
5	Verify test results. • If okay, return to diagnostic index to service any additional symptoms. • If malfunction remains, replace PCM.		

End Of Sie

NO.21 ENGINE NOISE

AME418018881W23

21	ENGINE NOISE
DESCRIPTION	Engine noise from under hood
POSSIBLE CAUSE	**Squeal, click or chirp noise:** • Improper engine oil level • Improper drive belt tension **Rattle sound noise:** • Loose parts **Hiss sound noise:** • Vacuum leakage • Loose spark plug • Air leakage from intake-air system **Rumble or grind noise:** • Improper drive belt tension **Rap or roar sound noise:** • Exhaust system looseness **Other noise:** • Camshaft friction gear noise or MLA noise • Timing chain noise

Diagnostic procedure

STEP	INSPECTION	RESULTS	ACTION
1	Is squeal, click or chirp sound present?	Yes	Inspect engine oil level or drive belts.
		No	Go to next step.
2	Is rumble or grind sound present?	Yes	Inspect drive belts.
		No	Go to next step.
3	Is rattle sound present?	Yes	Inspect location of rattle for loose parts.
		No	Go to next step.
4	Is hiss sound present?	Yes	Inspect for following: • Vacuum leakage • Spark plug looseness • Intake-air system leakage
		No	Go to next step.
5	Is rap or roar sound present?	Yes	Inspect exhaust system for loose parts.
		No	Go to next step.
6	Is knock sound present?	Yes	Go to symptom troubleshooting "No.11 Knocking/ pinging".
		No	If noise comes from engine internal, inspect for friction gear, timing chain or MLA noise.
7	Verify test results. • If okay, return to diagnostic index to service any additional symptoms. • If malfunction remains, replace PCM.		

End Of Sie

NO.22 VIBRATION CONCERNS (ENGINE)

AME418018881W24

22	VIBRATION CONCERNS (ENGINE)
DESCRIPTION	• Vibration from under hood or driveline
POSSIBLE CAUSE	• Loose attaching bolts or worn parts • Components malfunction such as worn parts

Diagnostic procedure

STEP	INSPECTION	RESULTS	ACTION
1	Inspect following components for loose attaching bolts or worn parts: • Cooling fan • Condenser fan • Drive belt and pulleys • Engine mounts All items okay?	Yes	Inspect following systems: • Wheels • Driveline • Suspension
		No	Readjust or retighten engine mount installation position. Service if necessary for other parts.
2	Verify test results. • If okay, return to diagnostic index to service any additional symptoms. • If malfunction remains, replace PCM.		

End Of Ste

NO.23 A/C DOES NOT WORK SUFFICIENTLY

AME418018881W25

F3

23	A/C DOES NOT WORK SUFFICIENTLY.
DESCRIPTION	A/C compressor magnetic clutch does not engage when A/C switch is turned on.
POSSIBLE CAUSE	• Improper refrigerant charging amount • Open A/C magnetic clutch • Open circuit between A/C relay and A/C magnetic clutch • Poor GND of A/C magnetic clutch • Refrigerant pressure switch is stuck open. • A/C relay is stuck open. • Seized A/C compressor • Open circuit between A/C switch and PCM through both refrigerant pressure switch and A/C amplifier

Diagnostic procedure

STEP	INSPECTION	RESULTS	ACTION
1	Connect WDS or equivalent to DLC-2. Retrieve any continuous memory, KOEO and KOER DTCs. Are there any DTCs displayed?	Yes	**DTC is displayed:** Go to appropriate DTC test.
		No	**No DTC is displayed:** Go to next step.
2	Disconnect A/C compressor connector. Start engine and turn A/C switch on. Is there correct voltage at terminal of A/C compressor magnetic clutch connector? **Specification** **More than 10.5 V**	Yes	Inspect for GND condition of magnetic clutch on A/C compressor. If GND condition is okay, inspect for open circuit magnetic clutch coil.
		No	Go to next step.
3	Disconnect refrigerant pressure switch connector. Connect jumper wire between terminals of A/C high pressure switch connector. Connect jumper wires between terminals of refrigerant pressure switch connector. Connect WDS or equivalent to DLC-2. Access ACSW PID. Turn ignition switch to ON position. Turn A/C switch on and set blower fan at any speed. Does ACSW PID read ON?	Yes	Inspect refrigerant pressure switch operation. If switch is okay, go to next step.
		No	Inspect for following: • A/C switch is stuck open. • Open circuit between refrigerant pressure switch and PCM terminal 1AC • Open circuit of blower motor fan switch and resistor (if blower motor does not operate) • Evaporator temperature sensor and A/C amplifier
4	Remove jumper wire from switch connector. Reconnect connector to refrigerant pressure switch. Start engine and turn A/C switch on. Does fan operate?	Yes	Inspect for stuck open A/C relay. Replace if necessary.
		No	Inspect following and repair or replace as necessary: • Refrigerant charging amount • A/C compressor for being seized
5	Verify test results. • If okay, return to diagnostic index to service any additional symptoms. • If malfunction remains, replace PCM.		

NO.24 A/C IS ALWAYS ON OR A/C COMPRESSOR RUNS CONTINUOUSLY

AME418018881W26

24	A/C IS ALWAYS ON OR A/C COMPRESSOR RUNS CONTINUOUSLY.
DESCRIPTION	A/C compressor magnetic clutch does not disengage.
POSSIBLE CAUSE	• Stuck engagement A/C compressor magnetic clutch • A/C relay is stuck closed. • Short to GND between A/C switch and PCM • Short to GND circuit between A/C relay and PCM • A/C relay to magnetic clutch circuit shorted to battery power

Diagnostic procedure

STEP	INSPECTION	RESULTS	ACTION
1	Connect WDS or equivalent to DLC-2. Retrieve any continuous memory, KOEO and KOER DTCs. Are there any DTCs displayed?	Yes	**DTC is displayed:** Go to appropriate DTC test.
		No	**No DTC is displayed:** Go to next step.
2	Start engine and run it at idle. Turn A/C switch on. Remove A/C relay. Does A/C magnetic clutch disengage?	Yes	Inspect for following: • A/C relay is stuck closed. • Short to GND circuit between A/C relay and PCM terminal 4O. If both items okay, go to next step.
		No	Inspect if circuit between A/C relay and magnetic clutch shorts to battery power circuit. If circuit is okay, inspect magnetic clutch stuck engagement or clearance.
3	Connect WDS or equivalent to DLC-2. Access ACSW PID. Start engine and turn A/C switch on. Read ACSW PID while disconnecting refrigerant pressure switch connector. **Note** • ACSW PID should read OFF when disconnecting connector. If ACSW PID reading remains ON, short to GND circuit may be present. Does ACSW PID reading remain ON?	Yes	Inspect for short to GND circuit between refrigerant pressure switch and PCM terminal 1AC.
		No	Go to next step.
4	Reconnect refrigerant pressure switch connector. Read ACSW PID while turning off A/C switch. **Note** • ACSW PID should read OFF when turning A/C switch off. If ACSW PID reading remains ON, short to GND circuit may be present. Does ACSW PID reading remain ON?	Yes	Inspect following: • Short to GND circuit between A/C switch and A/C amplifier • Short to GND circuit between A/C amplifier and refrigerant pressure switch
		No	Inspect for stuck closed A/C switch.
5	Verify test results. • If okay, return to diagnostic index to service any additional symptoms. • If malfunction remains, replace PCM.		

End Of Ste

NO.25 A/C IS NOT CUT OFF UNDER WIDE OPEN THROTTLE CONDITIONS

AME418018881W27

25	A/C IS NOT CUT OFF UNDER WOT CONDITIONS.
DESCRIPTION	A/C compressor magnetic clutch does not disengage under WOT.
POSSIBLE CAUSE	• TP sensor malfunction • TP sensor misadjustment • Loosely installed TP sensor.

Diagnostic procedure

STEP	INSPECTION	RESULTS	ACTION
1	Does A/C compressor disengage when A/C switch is turned off?	Yes	Go to next step.
		No	Go to symptom troubleshooting "No.24 A/C is always on or A/C compressor runs continuously".

STEP	INSPECTION	RESULTS	ACTION
2	Connect WDS or equivalent to DLC-2. Retrieve any continuous memory, KOEO and KOER DTCs. Are there any DTCs displayed?	Yes	**DTC is displayed:** Go to appropriate DTC test.
		No	**No DTC is displayed:** Inspect TP sensor for proper adjustment.
3	Verify test results. • If okay, return to diagnostic index to service any additional symptoms. • If malfunction remains, replace PCM.		

End Of Sta

NO.26 EXHAUST SULPHUR SMELL

AME418018881W28

26	EXHAUST SULPHUR SMELL
DESCRIPTION	Rotten egg smell (sulphur) from exhaust
POSSIBLE CAUSE	• Electrical connectors are disconnected or connected poorly • Charcoal canister malfunction • Vacuum lines are disconnected or connected improperly. • Improper fuel pressure • Poor fuel quality **Warning** **The following troubleshooting flow chart contains fuel system diagnosis and repair procedures. Read following warnings before performing fuel system services:** • **Fuel vapor is hazardous. It can easily ignite, causing serious injury and damage. Always keep sparks and flames away from fuel.** • **Fuel line spills and leakage are dangerous. Fuel can ignite and cause serious injuries or death and damage. Fuel can also irritate skin and eyes. To prevent this, always complete "BEFORE REPAIR PROCEDURE" and "AFTER REPAIR PROCEDURE" described in this manual.** **(See F3–57 BEFORE REPAIR PROCEDURE.)** **(See F3–57 AFTER REPAIR PROCEDURE.)** **Caution** • **Disconnecting/connecting quick release connector without cleaning it may possibly cause damage to fuel pipe and quick release connector. Always clean quick release connector joint area before disconnecting/connecting, and make sure that it is free of foreign material.**

Diagnostic procedure

STEP	INSPECTION	RESULTS	ACTION
1	Are any driveability or exhaust smoke concerns present?	Yes	Go to appropriate flow chart.
		No	Go to next step.
2	Inspect following: • Electrical connections • Vacuum lines • Fuel quality Are all items okay?	Yes	Go to next step.
		No	Service as necessary. Repeat Step 2.
3	Connect WDS or equivalent to DLC-2. Retrieve any continuous memory, KOEO and KOER DTCs. Are there any DTCs displayed?	Yes	**DTC is displayed:** Go to appropriate DTC test.
		No	**No DTC is displayed:** Go to next step.
4	Install fuel pressure gauge between fuel pipe and fuel distributor. Start engine and run it at idle. Is fuel line pressure correct at idle? (See F3–58 FUEL LINE PRESSURE INSPECTION)	Yes	Go to next step.
		No	**Zero or low:** Inspect for clogged fuel line. If okay, replace fuel pump unit. **High:** Replace fuel pump unit.
5	Inspect charcoal canister for fuel saturation. Is excess amount of liquid fuel present in canister?	Yes	Replace charcoal canister.
		No	Inspect fuel tank vent system. If fuel tank vent system is okay, since sulfur content can vary in different fuels, suggest trying a different brand. If fuel tank vent system is not okay, repair or replace malfunctioning parts.
6	Verify test results. • If okay, return to diagnostic index to service any additional symptoms. • If malfunction remains, replace PCM.		

End Of Sta

NO.27 CONSTANT VOLTAGE

AME418018881W29

27	CONSTANT VOLTAGE
DESCRIPTION	Incorrect constant voltage
POSSIBLE CAUSE	• Constant voltage circuit malfunction **Note** • TP sensor uses constant voltage.

Diagnostic procedure

STEP	INSPECTION	RESULTS	ACTION
1	Disconnect TP sensor connector where constant voltage circuit inspection failed. Turn ignition switch to ON position. Measure voltage between following TP sensor connector terminals: • Constant voltage terminal - GND terminal Is constant voltage **greater than 6.0 V**?	Yes	Go to Step 13.
		No	Go to next step.
2	Is voltage across battery terminals **greater than 10.5 V**?	Yes	Go to next step.
		No	Inspect charging system.
3	Turn ignition switch off. Leave TP sensor connector disconnected. Measure voltage between battery positive terminal and GND (between PCM and TP sensor) circuit at appropriate sensor connector. Is voltage **greater than 10.5 V** and **within 1.0 V** of battery voltage?	Yes	Go to next step.
		No	Go to Step 8.
4	**Note** • Purpose of this step is to determine if WDS or equivalent is communicating with PCM. Turn ignition switch to ON position. Attempt to access ECT PID. Can ECT PID be accessed?	Yes	Go to Step 7.
		No	Go to next step.
5	Turn ignition switch off. Disconnect TP sensor and PCM connectors. Turn ignition switch to ON position. Measure voltage between PCM connector terminals 2Y and 2AB. Is voltage **greater than 10.5 V**?	Yes	Go to next step.
		No	Repair open circuit between PCM terminal 2Y and main relay.
6	Leave TP sensor and PCM connectors disconnected. Measure resistance between PCM connector terminals 2Y and 2AB. Is resistance **greater than 10,000 ohms**?	Yes	Inspect for constant voltage at suspect sensor connector again.
		No	Repair constant voltage circuit short to GND.
7	Turn ignition switch off. Leave TP sensor disconnected. Disconnect PCM connector. Measure resistance between PCM connector terminal 2K and constant voltage circuit at appropriate sensor connector. Is resistance **less than 5.0 ohms**?	Yes	Inspect for constant voltage at suspect sensor connector again.
		No	Repair open constant voltage circuit.

STEP	INSPECTION	RESULTS	ACTION
8	**Note** • Purpose of this step is to determine if WDS or equivalent is communicating with PCM. Reconnect TP sensor connector. Turn ignition switch to ON position. Attempt to access ECT PID. Can ECT PID be accessed?	Yes	Go to next step.
		No	Go to Step 11.
9	Are DTCs present for two or more sensors connected to PCM terminal 2H? Sensor connected to PCM terminal 2H: • IAT sensor (P0112, P0113) • FHO2S (P0131, P0132) • RHO2S (P0138) • Barometric pressure sensor (P2228, P2229) • Manifold absolute pressure sensor (P0107, P0108) • ECT sensor (P0117, P0118) • TP sensor (P0122, P0123) • TFT sensor (P0712, P0713)	Yes	Go to next step.
		No	Repair open GND circuit to sensor where constant voltage circuit inspection failed.
10	Turn ignition switch off. Disconnect WDS or equivalent from DLC-2. Disconnect PCM connector. Measure resistance between GND circuit at appropriate sensor connector and PCM connector terminal 2H. Is resistance **less than 5.0 ohms**?	Yes	Reconnect sensor connector. Go to appropriate DTC test.
		No	Repair open GND circuit.
11	Turn ignition switch off. Disconnect PCM connector. Measure resistance between battery negative terminal and PCM terminals 4X, 2AB, and 2AC. Is each resistance **less than 5.0 ohms**?	Yes	Go to next step.
		No	Repair open GND circuit.
12	Turn ignition switch off. Measure resistance between GND circuit at following sensor connector and GND: • IAT sensor (integated in MAF sensor) • FHO2S • RHO2S • Barometric pressure sensor • Manifold absolute pressure sensor • ECT sensor • TP sensor • TFT sensor	Yes	GND circuits are okay. Inspect for constant voltage at suspect sensor connector again.
		No	Inspect for open GND circuit.
13	Turn ignition switch off. Disconnect TP sensor and PCM connectors. Turn ignition switch to ON position. Measure voltage between constant voltage circuit at TP sensor connector and battery negative terminal. Is voltage **less than 0.5 V**?	Yes	Inspect for constant voltage at suspect sensor connector again.
		No	Repair constant voltage circuit shorted to power in harness.
14	Verify test results. • If okay, return to diagnostic index to service any additional symptoms. • If malfunction remains, replace PCM.		

End Of Sie

F3

NO.28 SPARK PLUG CONDITION

AME418018881W30

28	SPARK PLUG CONDITION
DESCRIPTION	Incorrect spark plug condition
POSSIBLE CAUSE	**Note** • Inspecting spark plugs condition can determine whether problem is related to a specific cylinder possibly all cylinders. **Wet/carbon stuck on specific plug:** • Spark—Weak, not visible • Air/fuel mixture—Excessive fuel injection volume • Compression—No compression, low compression • Faulty spark plug **Grayish white with specific plug:** • Air/fuel mixture—Insufficient fuel injection volume • Faulty spark plug **Wet/carbon is stuck on all plugs:** • Spark—Spark weak • Air/fuel mixture—Too rich • Compression—Low compression • Clogging in intake/exhaust system **Grayish white with all plugs:** • Air/fuel mixture—Too lean **Warning** **The following troubleshooting flow chart contains the fuel system diagnosis and repair procedures. Read the following warnings before performing the fuel system services:** • **Fuel vapor is hazardous. It can easily ignite, causing serious injury and damage. Always keep sparks and flames away from fuel.** • **Fuel line spills and leakage are dangerous. Fuel can ignite and cause serious injuries or death and damage. Fuel can also irritate skin and eyes. To prevent this, always complete "BEFORE REPAIR PROCEDURE" and "AFTER REPAIR PROCEDURE" described in this manual.** **(See F3–57 BEFORE REPAIR PROCEDURE.)** **(See F3–57 AFTER REPAIR PROCEDURE.)** **Caution** • **Disconnecting/connecting quick release connector without cleaning it may possibly cause damage to fuel pipe and quick release connector. Always clean quick release connector joint area before disconnecting/connecting, and make sure that it is free of foreign material.**

Diagnostic procedure

STEP	INSPECTION	RESULTS	ACTION
1	Remove all spark plugs. Inspect spark plug condition. Is spark plug condition okay?	Yes	Troubleshooting completed.
		No	**Specific plug is wet or covered with carbon:** Go to next step. **Specific plug looks grayish white:** Go to Step 7. **All plugs are wet or covered with carbon:** Go to Step 9. **All plugs look grayish white:** Go to Step 15.
2	Is spark plug wet/covered with carbon by engine oil?	Yes	Working up and down inspect all areas related to oil.
		No	Go to next step.
3	Inspect spark plug for following: • Cracked insulator • Heat range • Air gap • Worn electrode Is spark plug okay?	Yes	Go to next step.
		No	Replace spark plug.
4	Inspect compression pressure at suspected faulty cylinder. Is compression pressure correct? (See B3–31 COMPRESSION INSPECTION.)	Yes	Go to next step.
		No	Repair or replace malfunctioning parts.
5	Install all spark plugs. Carry out spark test at suspected faulty cylinder. Is strong blue spark visible? (Compare with normal cylinder.)	Yes	Go to next step.
		No	Repair or replace malfunctioning parts.

STEP	INSPECTION	RESULTS	ACTION
6	Carry out fuel line pressure inspection. (See F3–58 FUEL LINE PRESSURE INSPECTION) Is fuel line pressure correct?	Yes	Inspect fuel injector for following: • Open or short in injector • Leakage • Injection volume
		No	**Zero or low:** Inspect fuel pump circuit. Inspect for fuel pump relief valve open. Inspect for fuel leakage inside pressure regulator. Inspect for clogged main fuel line. **High:** Inspect pressure regulator for high pressure cause. Inspect for clogged fuel return line.
7	Inspect spark plug for following. • Heat range • Air gap Is spark plug okay?	Yes	Go to next step.
		No	Replace spark plug.
8	Remove suspected fuel injector. Inspect following: • Resistance (See F3–70 FUEL INJECTOR INSPECTION.) • Fuel injection volume (See F3–70 FUEL INJECTOR INSPECTION.) Are all above items okay?	Yes	Inspect for open circuit between suspected fuel injector connector terminal and PCM connector following terminals: • **For #1 or #4 cylinder: 1A** • **For #2 or #3 cylinder: 1B**
		No	Replace fuel injector.
9	Is air cleaner element free of restrictions?	Yes	Go to next step.
		No	Replace air cleaner element.
10	Carry out spark test. Is strong blue spark visible at each cylinder?	Yes	Go to next step.
		No	Repair or replace malfunctioning parts.
11	Carry out fuel line pressure inspection. (See F3–58 FUEL LINE PRESSURE INSPECTION) Is fuel line pressure correct?	Yes	Go to next step.
		No	**Zero or low:** Inspect for clogged fuel line. If okay, replace fuel pump unit. **High:** Replace fuel pump unit.
12	Inspect following PIDs. • ECT • O2S11 (When engine can be started) • MAF (See F3–83 PCM INSPECTION.) Are PIDs okay?	Yes	Go to next step.
		No	Repair or replace malfunctioning parts.
13	Carry out purge control inspection. (When engine can be started) (See F3–276 Purge Control System Inspection.) Is purge control correct?	Yes	Go to next step.
		No	Repair or replace malfunctioning parts.
14	Carry out compression inspection. Is compression correct?	Yes	Inspect for clogging in exhaust system.
		No	Repair or replace malfunctioning parts.
15	When engine cannot be started, inspect intake-air system for air leakage. When engine can be started, carry out intake manifold vacuum inspection. Is air sucked in from intake-air system?	Yes	Repair or replace malfunctioning part.
		No	Go to next step.
16	Carry out fuel line pressure inspection. (See F3–58 FUEL LINE PRESSURE INSPECTION) Is fuel line pressure correct?	Yes	Inspect following PIDs. • ECT • O2S11 • MAF (See F3–83 PCM INSPECTION.) Inspect PCM GND condition.
		No	**Zero or low:** Inspect for clogged fuel line. If okay, replace fuel pump unit. **High:** Replace fuel pump unit.
17	Verify test results. • If okay, return to diagnostic index to service any additional symptoms. • If malfunction remains, replace or reprogram PCM.		

End Of Sie

INTERMITTENT CONCERN TROUBLESHOOTING

AME418018881W31

Vibration Method

1. If malfunction occurs or becomes worse while driving on a rough road or when engine is vibrating, perform the steps below.

Note

- There are several reasons vehicle or engine vibration could cause an electrical malfunction. Some of the things to check for are:
  - — Connectors not fully seated.
  - — Wire harnesses not having full play.
  - — Wires laying across brackets or moving parts.
  - — Wires routed too close to hot parts.
- An improperly routed, improperly clamped, or loose harness can cause wiring to become pinched between parts.
- The connector joints, points of vibration, and places where wire harnesses pass through the fire wall, body panels, etc. are the major areas to be checked.

Inspection Method for Switch Connectors or Wires

1. Connect WDS or equivalent to DLC-2.
2. Turn ignition key to ON position (Engine OFF).

Note

- If engine starts and runs, perform the following steps at idle.

3. Access PIDs for the switch you are inspecting.
4. Turn switch on manually.
5. Shake each connector or wire harness a bit vertically and horizontally while monitoring the PID.
   - If PID value is unstable, check for poor connection.

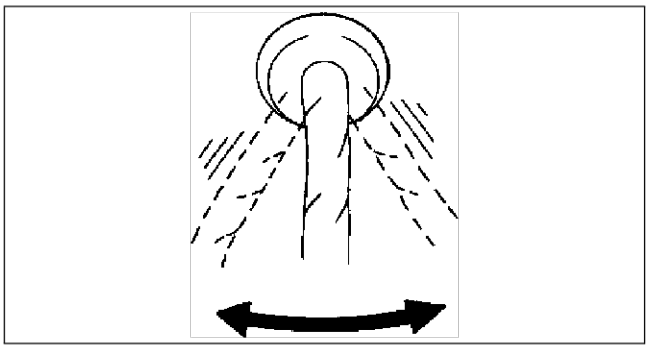

Y3U103WN3

Inspection Method for Sensor Connectors or Wires

1. Connect WDS or equivalent to DLC-2.
2. Turn ignition switch to ON position (Engine OFF).

Note

- If engine starts and runs, perform the following steps at idle.

3. Access PIDs for the switch you are inspecting.
4. Shake each connector or wire harness a bit vertically and horizontally while monitoring the PID.
   - If PID value is unstable, check for poor connection.

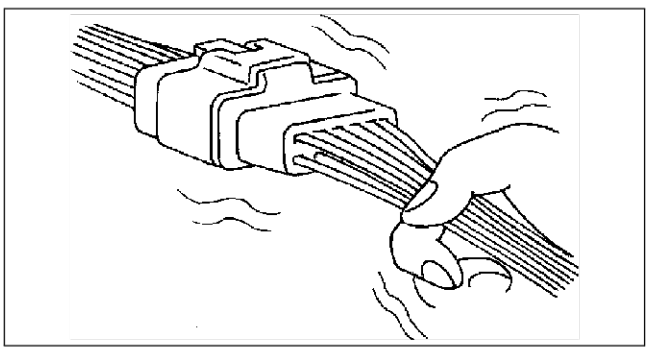

Y3U103WN4

Inspection Method for Sensors

1. Connect WDS or equivalent to DLC-2.
2. Turn ignition switch to ON position (Engine OFF).

Note
- If engine starts and runs, perform the following steps at idle.

3. Access PIDs for the switch you are inspecting.
4. Vibrate the sensor slightly with your finger.
   - If PID value is unstable or malfunction occurs, check for poor connection and/or poorly mounted sensor.

Inspection Method for Actuators or Relays
1. Connect WDS or equivalent to DLC-2.
2. Turn ignition switch to ON position (Engine OFF).

Note
- If engine starts and runs, perform the following steps at idle.

3. Prepare the Output State Control for actuators or relays that you are inspecting.
4. Vibrate the actuator or relay with your finger for 3 seconds are Output State Control is activated.
   - If variable click sound is heard, check for poor connection and/or poorly mounted actuator or relay.

Note
- Vibrating relays too strongly may result in open relays.

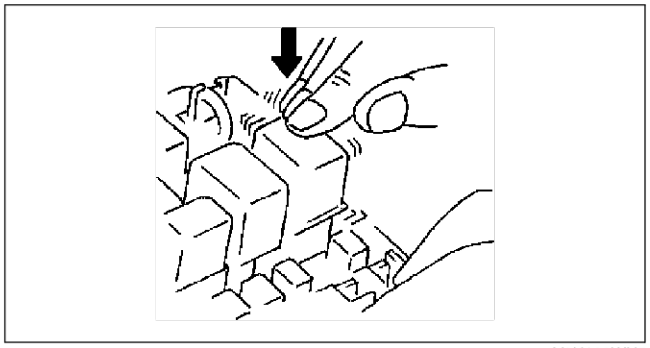
Y3U103WN5

Water Sprinkling Method

Caution
- **Indirectly change the temperature and humidity by spraying water onto the front of the radiator.**
- **If a vehicle is subject to water leakage, the leakage may damage the control module. When testing a vehicle with a water leakage problem, special caution must be used.**

If malfunction occurs only during high humidity or rainy/snowy weather, perform the following steps.
1. Connect WDS or equivalent to DLC-2 if you are inspecting sensors or switches.
2. Turn ignition switch to ON position (Engine OFF).

Note
- If engine starts and runs, perform the following steps at idle.

3. Access PIDs for sensor or switch if you are inspecting sensors or switches.
4. If you are inspecting the switch, turn it on manually.
5. Spray water onto the vehicle or run it through a car wash.
   - If PID value is unstable or malfunction occurs, repair or replace part as necessary.

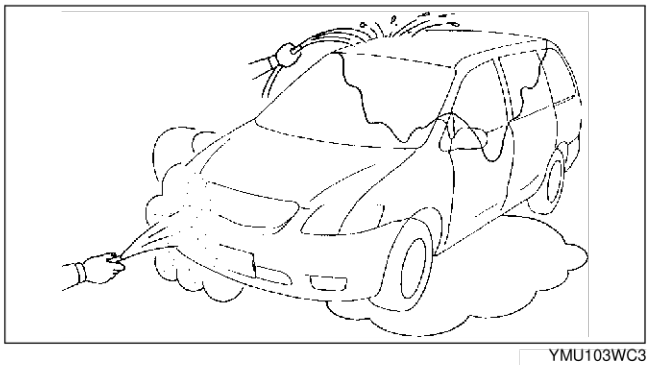
YMU103WC3

End Of Sta

ENGINE CONTROL SYSTEM OPERATION INSPECTION

AME418018881W32

Main Relay Operation Inspection
1. Verify that the main relay clicks when the ignition switch is turned to ON position and off.
   - If there is no operation sound, inspect the following.
     — Main relay (See T–28 RELAY INSPECTION.)
     — Harness and connector between ignition switch and main relay terminal A.

— Harness and connector between PCM terminal 2X and main relay terminal E.

Intake Manifold Vacuum Inspection

1. Verify air intake hoses are installed properly.
2. Start the engine and run it at idle.
3. Disconnect the vacuum hose between the intake manifold and purge solenoid valve from the intake manifold side.
4. Connect a vacuum gauge to the intake manifold and measure the intake manifold vacuum.
   - If not as specified, inspect the following.

Specification
More than 60 kPa {450 mmHg, 18 inHg}

Note
- Air suction can be located by engine speed change when lubricant is sprayed on the area where suction is occurring.
  — Air suction at throttle body, intake manifold and PCV valve installation points
  — Accelerator cable free play
  — Fuel injector insulator
  — Engine compression
  (See B3–31 COMPRESSION INSPECTION.)

Idle Air Control System Inspection
Engine coolant temperature compensation inspection

1. Connect WDS or equivalent to the DLC-2.
2. Select the following PIDs.
   - ECT
   - IAT
   - RPM
3. Verify that the engine is in cold condition, then start the engine.
4. Verify that the engine speed decreases as the engine warms up.
   - If the engine speed does not decrease or decreases slowly, inspect the following.
     — ECT sensor and related harness
     (See F3–90 ENGINE COOLANT TEMPERATURE (ECT) SENSOR INSPECTION.)
     — IAC valve and related harness
     (See F3–52 IDLE AIR CONTROL (IAC) VALVE INSPECTION.)

Load compensation inspection

1. Start the engine and run is at idle.
2. Connect WDS or equivalent to the DLC-2.
3. Verify that P0506, P0507 or P0511 not displayed.
   - If P0506, P0507 or P0511 shown, carry out DTC inspection.
   (See F3–104 DTC TABLE.)
4. Change the duty value of the IAC valve to **100%** using the IAC PID.
5. Verify that the idle speed increases.
   - If the idle speed does not change, inspect the following.
     — IAC valve air passage
     — Open or short circuit between IAC valve connector terminals and PCM connector terminals 4G and 4J
6. Select the following PIDs.
   - ACSW
   - IAC
   - PSP
   - RPM

Note
- Excludes temporary idle speed drop just after the loads are turned on.

7. Verify that the engine speed is within the specification under each load condition.
   - If not as specified specific load condition, inspect the following.
     — A/C switch and related harness
     — Fan switch and related harness
     — PSP switch and related harness
     (See F3–95 POWER STEERING PRESSURE (PSP) SWITCH INSPECTION.)

Engine speed

Load condition	Engine speed (rpm)*1
No load	600—700
E/L operating	600—700
A/C operating*2	650—750
P/S operating	650—750

*1: Excludes temporary idle speed drop just after the electrical loads are turned on.
*2: A/C switch and fan switch are on.

VIS Operation Inspection

1. Start the engine.
2. Inspect the rod operation under the following condition.

Rod operation

Engine speed	4,500 rpm	
	Below	Above
Shutter valve actuator	Operate	Not operate

- If the rod operation is not as specified, inspect as follows.

(1) Stop the engine.
(2) Connect WDS or equivalent to the DLC-2.
(3) Verify that DTC P0661 or P0662 is not displayed.
- If DTC P0661 or P0662 is shown, carry out DTC inspection. (See F3–104 DTC TABLE.)

(4) Turn ignition switch to ON.
(5) Turn the VIS control solenoid valve from on to off using the IVC PID and verify that operation sound of the solenoid valve is heard.
- If the operation sound is heard, inspect the following.
  — Vacuum hose and vacuum chamber for looseness or damage
  — Shutter valve actuator (See F3–53 VARIABLE INTAKE-AIR SYSTEM (VIS) SHUTTER VALVE ACTUATOR INSPECTION.)
  — Shutter valve stuck open or close
- If the operation sound is not heard, inspect the following.
  — VIS control solenoid valve (See F3–53 VARIABLE INTAKE-AIR SYSTEM (VIS) SHUTTER VALVE ACTUATOR INSPECTION.)

Variable Tumble Control System (VTCS) Operation Inspection

1. Connect the WDS or equivalent to the DLC-2.
2. Access ECT PID.
3. Verify that ECT PID is **between 60°C {140°F} and 120°C {248°F}**.
4. Start the engine.
5. Inspect rod operation under the following condition.

Rod operation

Engine speed	3,500 rpm	
	Below	Above
Shutter valve actuator	Operate	Not operate

- If the rod operation is not specified, inspect as follows.

(1) Verify that DTC No. P2009 or P2010 is not displayed.
- If DTC No. P2009 or P2010 are shown, carry out DTC inspection. (See F3–104 DTC TABLE.)

(2) Turn ignition switch to ON.
(3) Turn the VTCS solenoid valve from on to off using the IMRC PID and verify that operation sound of the solenoid valve is heard.
- If the operation sound is heard, inspect the following.
  — Vacuum hose and vacuum chamber for looseness or damage
  — Shutter valve actuator (See F3–54 VARIABLE TUMBLE CONTROL SYSTEM (VTCS) SHUTTER VALVE ACTUATOR INSPECTION.)
  — Shutter valve stuck open or close
- If the operation sound is not heard, inspect the following.
  — Vriable tumble control solenoid valve (See F3–54 VARIABLE TUMBLE CONTROL SOLENOID VALVE INSPECTION.)

Fuel Injector Operation Inspection

STEP	INSPECTION	RESULTS	ACTION
1	While cranking engine, inspect for fuel injector operation sound at each cylinder using a soundscope. Is operation sound heard?	Yes	Fuel injector operation is okay.
		No	**All cylinders no heard:** Go to next step. **Some cylinders no heard:** Go to Step 3.
2	Carry out main relay operation inspection. Is main relay operation normal?	Yes	Inspect following: • Fuel injector power system related wiring harness and connectors • PCM connectors • Fuel injector GND and related wiring harness and connectors
		No	Repair or replace malfunctioning parts.
3	Change fuel injector connector of not operating fuel injector and operating fuel injector. Is operation sound heard?	Yes	Go to next step.
		No	Replace fuel injector.
4	Are wiring harness and connectors of not operation fuel injector okay? (Open or short)	Yes	Inspect PCM terminal voltage of fuel injector signal.
		No	Repair or replace malfunctioning parts.

Fuel Cut Control System Inspection

1. Warm up engine and let it idle.
2. Turn off the electrical loads and A/C switch.
3. Connect WDS or equivalent to the DLC-2.
4. Select RPM and FUELPW1 PIDs.
5. Monitor both PIDs while performing the following steps.
   (1) Depress the accelerator pedal and increase the engine speed to **4,000 rpm**.
   (2) Release the accelerator pedal (brake pedal is not depressed) and verify that the fuel injector duration time is **0 msec.**, and **2—5 msec.** when the engine speed drops below **1,200 rpm**.
   - If not as specified, inspect the following.
     — ECT sensor and related harness
     (See F3–90 ENGINE COOLANT TEMPERATURE (ECT) SENSOR INSPECTION.)
     — Neutral/clutch switch and related harness (MTX)
     (See F3–96 CLUTCH SWITCH INSPECTION.)
     — TR switch and related harness (ATX)
     (See K2–76 TRANSAXLE RANGE (TR) SWITCH INSPECTION.)

Fuel Pump Operation Inspection

1. Connect WDS or equivalent to the DLC-2.
2. Remove the fuel-filler cap.
3. Turn the ignition switch to ON position.
4. Turn the fuel pump relay from off to on using the FP PID and inspect if the operation sound is heard.
   - If no operation sounds is heard, proceed to next step.
5. Measure the voltage at harness side fuel pump connector terminal B.

Specification
B+ (Ignition switch is on)

- If the voltage is as specified, inspect the following.
  — Fuel pump continuity
  — Fuel pump GND
  — Wiring harness between fuel pump relay and PCM terminal 4P (without immobilizer system), 4Q (with immobilizer system)
- If not as specified, inspect the following.
  — Fuel pump relay (See T–28 RELAY INSPECTION.)
  — Wiring harness and connector (Main relay-fuel pump relay-fuel pump)

Fuel Pump Control System Inspection

1. Connect WDS or equivalent to the DLC-2.
2. Turn the ignition switch to ON position.
3. Select FP PID.
4. Turn the fuel pump relay from off to on and inspect if the operation sound of the fuel pump relay is heard.
   - If no operation sound is heard, inspect the fuel pump relay.
   - If the fuel pump relay is normal, inspect the following.
     — Wiring harnesses and connectors (Main relay-fuel pump relay-PCM)

Spark Test

1. Remove the fuel pump relay.
2. Verify that each high-tension lead and connector is connected properly.
3. Inspect the ignition system in the following procedure.

Warning

- **High voltage in the ignition system can cause strong electrical shock which can result in serious injury. Avoid direct contact to the vehicle body during the following spark test.**

STEP	INSPECTION	RESULTS	ACTION
1	**Note** • No.1 and No.4 cylinders and No.2 and No.3 cylinders are ignited simultaneously. Disconnect high-tension lead from spark plugs. Remove spark plugs. Reconnect spark plugs to high-tension lead. Ground spark plugs to engine. Is strong blue spark visible at each cylinder while cranking?	Yes	Ignition system is okay.
		No	**Some cylinders do not spark:** Go to next step. **All cylinders do not spark:** Go to Step 5.
2	Inspect spark plugs for damage, wear, carbon deposits and proper plug gap. Are spark plugs okay?	Yes	Go to next step.
		No	Replace spark plugs, then go to Step 1.
3	Inspect high-tension leads for insulation damage, looseness, shorting or other damage. Are high-tension leads okay?	Yes	Go to next step.
		No	Replace high-tension leads, then go to Step 1.
4	Inspect following wiring harnesses for open or short: • Ignition coil terminal C-PCM terminal 1A • Ignition coil terminal A-PCM terminal 1B Are wiring harnesses okay?	Yes	Inspect and replace ignition coil. See G–16 IGNITION COIL INSPECTION.
		No	Repair or replace malfunctioning parts, then go to Step 1.
5	Measure voltage at terminal B in ignition coil. Is voltage reading **B+**?	Yes	Go to next step.
		No	Inspect power supply circuit of ignition coil.
6	Does PCM connector or ignition coil connector have poor connection?	Yes	Repair or replace connector, then go to Step 1.
		No	Go to next step.
7	Are following item okay? • CKP sensor and crankshaft pulley • PCM terminal 1A/1B voltage **Specification** **Approx. 1.5 V**	Yes	Inspect for open or short in wiring harness and connector of CKP sensor.
		No	Repair or replace malfunctioning parts, then go to Step 1.

EGR Control System Inspection

1. Verify that EGR valve operation (initial operation) sound is heard when the ignition switch is turned to ON position.
   - If the operation sound is not heard, connect WDS or equivalent to the DLC-2 and verify that the DTC P0403 is shown. Carry out DTC inspection. (See F3–104 DTC TABLE.)
2. Start the engine and run it at idle.
3. Increase the step value of EGR valve **from 0 to 40** using SEGRP PID.
4. Operate the EGR valve and inspect if the engine speed becomes unstable or the engine stalls.
   - If the engine speed will not change, proceed to following.
   (1) Stop the engine.
   (2) Remove the EGR valve.
   (3) Connect the EGR valve connector.
   (4) Turn the ignition switch to ON.
   (5) Increase the step value of EGR valve from 0 to 40 using SEGRP PID.
   (6) Inspect the EGR operation.
      - If the EGR valve is operated, clean the EGR valve and reinspect from Step 2.
      - If the EGR valve will not operate, replace the EGR valve and reinspect from Step 2.
5. Warm up the engine to normal operating temperature.
6. Select the following PIDs.
   - ECT
   - RPM
   - SEGRP
   - TP
   - VSS

7. Let the vehicle idle and verify that the SEGRP value is 0.
8. Put the vehicle in drive.
9. Depress the accelerator pedal and verify that the SEGRP value is increased.
   - If the SEGRP value will not increase, inspect the VSS, TP and ECT PIDs. (See F3–83 PCM INSPECTION.)
10. Stop the vehicle and verify that the SEGRP value is returned 0.

Purge Control System Inspection

1. Start the engine.
2. Disconnect the vacuum hose between the purge solenoid valve and the charcoal canister.
3. Put a finger to the purge solenoid valve and verify that there is no vacuum applied when the engine is cold.
   - If there is a vacuum, inspect the following.
     — Wiring harness and connectors (Purge solenoid valve-PCM terminal 4U)
     — Purge solenoid valve
4. Warm up the engine to the normal operating temperature.
5. Stop the engine.
6. Connect WDS or equivalent to the DLC-2 and verify that the DTC P0443 is shown. Carry out DTC inspection. (See F3–104 DTC TABLE.)
7. Turn the ignition switch to ON position.
8. Select ECT PID.
9. Verify that the engine coolant temperature is above **60°C {140°F}**.
   - If WDS or equivalent indicates below **60°C {140°F}**, carry out the ECT sensor inspection.
10. Select EVAPCP PID.
11. Increase the duty value of the purge solenoid valve to **50%** and inspect if the operation sound of the valve is heard.
    - If the operation sound is heard, inspect for the loose or damaged vacuum hose. (Intake manifold-purge solenoid valve-charcoal canister)
    - If the operation sound is not heard, carry out the purge solenoid valve inspection.

A/C Cut-off Control System Inspection

1. Start the engine.
2. Turn the A/C switch and fan switch on.
3. Verify that the A/C compressor magnetic clutch actuates.
   - If it does not actuate, go to symptom troubleshooting “No.23 A/C does not work sufficiently“.
4. Fully open the throttle valve and verify that the A/C compressor magnetic clutch does not actuate for **2—5 seconds**.
   - If it actuates, inspect as follows.

(1) Connect WDS or equivalent to the DLC-2.
(2) Turn the A/C switch off.
(3) Turn the ignition switch to ON position.
(4) Select ACCS PID.
(5) Turn the A/C relay from off to on and inspect if the operation sound of the relay is heard.
   - If the operation sound is heard, inspect TP PID.
   - If the operation sound is not heard, inspect following.
     — A/C relay
     — Open or short to GND circuit in wiring harness and connectors (Ignition switch-A/C relay-PCM terminal 4O)
     — A/C related parts

Cooling Fan Motors Operation Inspection

1. Cool down engine.
2. Connect the WDS or equivalent to the DLC-2.
3. Turn ignition switch on position.
4. Turn A/C switch off position
5. Verify that cooling fans are not operated.
   - If cooling fans are operated, Select FAN DUTY PID by using data monitor function and verify FAN DUTY PID value is **0%**.
     — If FAN DUTY PID value is **not 0%**, inspect ECT (voltage) and ACSW PID.
     — If FAN DUTY PID value is **0%**, inspect the fan control module and related harnesses.
6. Increase FAN DUTY PID value **from 0% to 100%** gradually by using data monitor and simulation function.
7. Verify that both cooling fans operation speed increase in accordance with FAN DUTY PID value changes.

Note

- Cooling fans are not rotate when FAN DUTY PID value is **lower than 30%** by fan motor internal friction.

- If there is a problem, inspect follows.

(1) Verify clicking sound of cooling fan relay when turn ignition switch off to on position.
   - If there is no clicking sound, inspect cooling fan relay and open circuit between main relay and cooling fan relay.
   - If clicking sound was heard, inspect next step.

(2) Inspect following parts in order in accordance with fan operation conditions.

Cooling fans do not operate.

- Open circuit between fan control module and cooling fan relay
- Open circuit between fan control module and GND
- Poor connection of fan control module connector.
- Fan control module malfunction

Only cooling fan motor No.1 does not operate

- Open or short to ground circuit between fan control module and cooling fan motor No.1
- Poor connection of fan control module connector or cooling fan motor No.1 connector
- Cooling fan motor No.1 malfunction
- Fan control unit malfunction

Only cooling fan motor No.2 does not operate

- Open or short to ground circuit between fan control module and cooling fan motor No.2
- Poor connection of fan control module connector or cooling fan motor No.2 connector
- Cooling fan motor No.2 malfunction
- Fan control module malfunction

End Of Ste

FUEL AND EMISSION CONTROL SYSTEMS [AJ]

FEATURES

OUTLINE F4-4
- OUTLINE OF CONSTRUCTION F4-4
- FEATURES F4-4
- SPECIFICATIONS F4-5
- CONTROL SYSTEM DIAGRAM F4-6
- CONTROL SYSTEM WIRING DIAGRAM F4-7

INTAKE-AIR SYSTEM F4-12
- INTAKE-AIR SYSTEM OUTLINE F4-12
- INTAKE-AIR SYSTEM STRUCTURAL VIEW .. F4-13
- INTAKE-AIR SYSTEM FLOW DIAGRAM F4-13
- INTAKE MANIFOLD COMMUNICATION CONTROL (IMCC) SYSTEM OUTLINE F4-14
- INTAKE MANIFOLD COMMUNICATION CONTROL (IMCC) SYSTEM STRUCTURAL VIEW F4-14
- INTAKE MANIFOLD COMMUNICATION CONTROL (IMCC) SYSTEM DESCRIPTION F4-15
- INTAKE MANIFOLD COMMUNICATION CONTROL (IMCC) ACTUATOR DESCRIPTION F4-15

FUEL SYSTEM F4-16
- FUEL SYSTEM OUTLINE F4-16
- FUEL SYSTEM STRUCTURAL VIEW F4-17
- FUEL SYSTEM DIAGRAM F4-18
- FUEL PUMP UNIT DESCRIPTION F4-18

EXHAUST SYSTEM F4-20
- EXHAUST SYSTEM OUTLINE F4-20
- EXHAUST SYSTEM STRUCTURAL VIEW F4-20

EMISSION SYSTEM F4-21
- EMISSION SYSTEM OUTLINE F4-21
- EMISSION SYSTEM STRUCTURAL VIEW F4-22

CONTROL SYSTEM F4-23
- OUTLINE F4-23
- STRUCTURAL VIEW F4-25
- BLOCK DIAGRAM F4-28
- CONTROL DEVICES AND CONTROL RELATIONSHIP CHART F4-30
- IDLE AIR CONTROL F4-31
- INTAKE MANIFOLD COMMUNICATION CONTROL (IMCC) F4-32
- FUEL INJECTION CONTROL F4-32
- FUEL PUMP CONTROL F4-33
- ELECTRIC SPARK ADVANCE (ESA) CONTROL F4-33
- EGR CONTROL F4-33
- PURGE CONTROL F4-33
- HO2S HEATER CONTROL F4-34
- A/C CUT-OFF CONTROL F4-35
- ELECTRICAL FAN CONTROL F4-36
- GENERATOR CONTROL F4-37
- PCM FUNCTION DISPLAY F4-37
- CONTROLLER AREA NETWORK (CAN) F4-38

ON-BOARD DIAGNOSTIC F4-39
- OUTLINE F4-39
- CONTROL DEVICES AND MONITORING SYSTEM RELATIONSHIP CHART F4-39
- DIAGNOSTIC TEST MODE F4-40
- DTC F4-44
- PID/DATA MONITOR AND RECORD F4-49
- SIMULATION TEST F4-51

SERVICE

LOCATION INDEX F4-52
- INTAKE-AIR SYSTEM F4-52
- FUEL SYSTEM F4-54
- EMISSION SYSTEM F4-55
- CONTROL SYSTEM F4-56

ENGINE TUNE-UP F4-58
- IGNITION TIMING INSPECTION F4-58
- IDLE SPEED INSPECTION F4-58
- IDLE MIXTURE INSPECTION F4-58

INTAKE-AIR SYSTEM F4-59
- VACUUM HOSE ROUTING DIAGRAM F4-59
- INTAKE-AIR SYSTEM REMOVAL/INSTALLATION F4-60
- IDLE AIR CONTROL (IAC) VALVE INSPECTION F4-62
- INTAKE MANIFOLD COMMUNICATION CONTROL (IMCC) ACTUATOR INSPECTION F4-63
- ACCELERATOR PEDAL REMOVAL/INSTALLATION F4-64
- ACCELERATOR CABLE INSPECTION F4-64
- ACCELERATOR CABLE ADJUSTMENT F4-64

FUEL SYSTEM F4-65
- BEFORE REPAIR PROCEDURE F4-65
- AFTER REPAIR PROCEDURE F4-65
- FUEL LINE PRESSURE INSPECTION F4-66
- FUEL TANK REMOVAL/INSTALLATION F4-68
- FUEL TANK INSPECTION F4-70
- NONRETURN VALVE INSPECTION F4-70
- FUEL PUMP UNIT REMOVAL/INSTALLATION F4-71
- FUEL PUMP UNIT DISASSEMBLY/ASSEMBLY F4-73
- FUEL PUMP UNIT INSPECTION F4-74
- FUEL FILTER (HIGH-PRESSURE) REMOVAL/INSTALLATION F4-74
- FUEL INJECTOR REMOVAL/INSTALLATION F4-75
- FUEL INJECTOR INSPECTION F4-78
- PRESSURE REGULATOR INSPECTION F4-80
- PULSATION DAMPER REMOVAL/INSTALLATION F4-80
- PULSATION DAMPER INSPECTION F4-80

EXHAUST SYSTEM F4-81
- EXHAUST SYSTEM INSPECTION F4-81
- EXHAUST SYSTEM REMOVAL/INSTALLATION F4-81

EMISSION SYSTEM F4-83
CHARCOAL CANISTER REMOVAL/INSTALLATION F4-83
CHARCOAL CANISTER INSPECTION F4-83
CATCH TANK INSPECTION F4-84
EVAPORATIVE GAS CHECK VALVE (ONE-WAY) INSPECTION F4-84
PURGE SOLENOID VALVE REMOVAL/INSTALLATION F4-84
PURGE SOLENOID VALVE INSPECTION F4-85
EGR VALVE INSPECTION F4-86
EGR BOOST SENSOR SOLENOID VALVE INSPECTION F4-87
PCV VALVE INSPECTION F4-87
WARM-UP THREE-WAY CATALYTIC CONVERTER (WU-TWC) INSPECTION (EUROPEAN (L.H.D.) SPECS) F4-88
CONTROL SYSTEM F4-90
PCM REMOVAL/INSTALLATION F4-90
PCM INSPECTION F4-91
MASS AIR FLOW (MAF)/INTAKE AIR TEMPERATURE (IAT) SENSOR INSPECTION F4-96
THROTTLE POSITION (TP) SENSOR INSPECTION F4-99
THROTTLE POSITION (TP) SENSOR REMOVAL/INSTALLATION F4-99
ENGINE COOLANT TEMPERATURE (ECT) SENSOR INSPECTION F4-100
ENGINE COOLANT TEMPERATURE (ECT) SENSOR REMOVAL/INSTALLATION F4-101
CRANKSHAFT POSITION (CKP) SENSOR INSPECTION F4-101
CRANKSHAFT POSITION SENSOR REMOVAL/INSTALLATION F4-102
CAMSHAFT POSITION (CMP) SENSOR INSPECTION F4-102
CAMSHAFT POSITION SENSOR REMOVAL/INSTALLATION F4-103
KNOCK SENSOR INSPECTION F4-103
KNOCK SENSOR REMOVAL/INSTALLATION F4-104
BAROMETRIC PRESSURE SENSOR/ EGR BOOST SENSOR INSPECTION F4-104
HEATED OXYGEN SENSOR (HO2S) INSPECTION F4-105
POWER STEERING PRESSURE (PSP) SWITCH INSPECTION F4-107
ON-BOARD DIAGNOSTIC F4-108
FOREWORD F4-108
OBD PENDING TROUBLE CODES F4-108
OBD FREEZE FRAME DATA F4-108
OBD ON-BOARD SYSTEM READINESS TEST F4-108
OBD DIAGNOSTIC MONITORING TEST RESULTS F4-109
OBD READ/CLEAR DIAGNOSTIC TEST RESULTS F4-109
OBD PARAMETER IDENTIFICATION (PID) ACCESS F4-109
ON-BOARD DIAGNOSTIC TEST F4-109
AFTER REPAIR PROCEDURE F4-110
OBD DRIVE MODE F4-110
DIAGNOSTIC MONITORING TEST RESULTS F4-112
DTC TABLE F4-113
DTC P0031 ..... F4-116
DTC P0032 ..... F4-118
DTC P0037 ..... F4-120
DTC P0038 ..... F4-122
DTC P0051 ..... F4-124
DTC P0052 ..... F4-126
DTC P0057 ..... F4-128
DTC P0058 ..... F4-130
DTC P0101 ..... F4-132
DTC P0102 ..... F4-134
DTC P0103 ..... F4-136
DTC P0106 ..... F4-138
DTC P0107 ..... F4-140
DTC P0108 ..... F4-142
DTC P0111 ..... F4-144
DTC P0112 ..... F4-146
DTC P0113 ..... F4-148
DTC P0117 ..... F4-150
DTC P0118 ..... F4-152
DTC P0121 ..... F4-154
DTC P0122 ..... F4-156
DTC P0123 ..... F4-158
DTC P0125 ..... F4-160
DTC P0131, P0132, P0151, P0152 ..... F4-161
DTC P0133, P0153 ..... F4-164
DTC P0134, P0154 ..... F4-166
DTC P0138, P0158 ..... F4-170
DTC P0140, P0160 ..... F4-172
DTC P0171, P0174 ..... F4-175
DTC P0172, P0175 ..... F4-178
DTC P0300 ..... F4-180
DTC P0301, P0302, P0303, P0304, P0305, P0306 ..... F4-184
DTC P0327 ..... F4-186
DTC P0328 ..... F4-188
DTC P0335 ..... F4-190
DTC P0340 ..... F4-192
DTC P0351 ..... F4-194
DTC P0352 ..... F4-196
DTC P0353 ..... F4-198
DTC P0354 ..... F4-200
DTC P0355 ..... F4-202
DTC P0356 ..... F4-204
DTC P0401 ..... F4-206
DTC P0402 ..... F4-208
DTC P0403 ..... F4-210
DTC P0421, P0431 ..... F4-212
DTC P0443 ..... F4-214
DTC P0480 ..... F4-216
DTC P0500 ..... F4-218
DTC P0505 ..... F4-220
DTC P0506 ..... F4-222
DTC P0507 ..... F4-223
DTC P0550 ..... F4-224
DTC P0660 ..... F4-226
DTC P0703 ..... F4-228
DTC P1309 ..... F4-229
DTC P1562 ..... F4-230
DTC P1602 ..... F4-232
DTC P1603 ..... F4-234
DTC P1604 ..... F4-235
DTC P1621 ..... F4-235
DTC P1622 ..... F4-236
DTC P1623 ..... F4-236

DTC P1624 ..... F4-237
DTC P1631 ..... F4-238
DTC P1633 ..... F4-240
DTC P1634 ..... F4-242
DTC U0073 ..... F4-243
DTC U0101 ..... F4-244
TROUBLESHOOTING F4-246
CONTROL SYSTEM DEVICE AND CONTROL RELATIONSHIP CHART F4-246
FOREWORD F4-247
INTERMITTENT CONCERN TROUBLESHOOTING F4-247
SYMPTOM DIAGNOSTIC INDEX F4-250
SYMPTOM QUICK DIAGNOSIS CHART F4-252
NO.1 MELTING OF MAIN OR OTHER FUSES F4-256
NO.2 MIL COMES ON F4-257
NO.3 WILL NOT CRANK F4-257
NO.4 HARD START/LONG CRANK/ ERRATIC START/ERRATIC CRANK F4-258
NO.5 ENGINE STALLS-AFTER START/ AT IDLE F4-260
NO.6 CRANKS NORMALLY BUT WILL NOT START F4-264
NO.7 SLOW RETURN TO IDLE F4-267
NO.8 ENGINE RUNS ROUGH/ ROLLING IDLE F4-268
NO.9 FAST IDLE/RUNS ON F4-270
NO.10 LOW IDLE/STALLS DURING DECELERATION F4-271
NO.11 ENGINE STALLS/QUITS, ENGINE RUNS ROUGH, MISSES, BUCK/JERK, HESITATION/STUMBLE, SURGES F4-272
NO.12 LACK/LOSS OF POWER-ACCELERATION/CRUISE F4-275
NO.13 KNOCKING/ PINGING-ACCELERATION/CRUISE F4-277
NO.14 POOR FUEL ECONOMY F4-278
NO.15 EMISSION COMPLIANCE F4-280
NO.16 HIGH OIL CONSUMPTION/ LEAKAGE F4-281
NO.17 COOLING SYSTEM CONCERNS-OVERHEATING F4-282
NO.18 COOLING SYSTEM CONCERNS-RUNS COLD F4-284
NO.19 EXHAUST SMOKE F4-284
NO.20 FUEL ODOR (IN ENGINE COMPARTMENT) F4-286
NO.21 ENGINE NOISE F4-287
NO.22 VIBRATION CONCERNS (ENGINE) F4-288
NO.23 A/C DOES NOT WORK SUFFICIENTLY F4-288
NO.24 A/C ALWAYS ON/ A/C COMPRESSOR RUNS CONTINUOUSLY F4-289
NO.25 A/C DOES NOT CUT OFF UNDER WIDE OPEN THROTTLE CONDITIONS F4-290
NO.26 EXHAUST SULPHUR SMELL F4-290
NO.27 FUEL REFILL CONCERNS F4-291
NO.28 FUEL FILLING SHUT OFF ISSUES F4-292
NO.29 CONSTANT VOLTAGE F4-292
NO.30 SPARK PLUG CONDITION F4-294
ENGINE CONTROL SYSTEM OPERATION INSPECTION F4-297

OUTLINE

OUTLINE OF CONSTRUCTION

AME420218881W01

- The construction and operation of the fuel and emission control systems is essentially carried over from that of the current MPV (LW), except for the following features. (See MPV Training Manual 3340-1*-99F.)

End Of Sec

FEATURES

AME420218881W02

Improved Emission Performance

- The barometric pressure sensor has been adopted. (European (L.H.D.) specs.)
- The EGR boost sensor and EGR boost sensor solenoid valve have been adopted. (Australian, General (L.H.D. R.H.D.) specs.)
- The rear heated oxygen sensors have been adopted. (European (L.H.D.) specs.)
- Three way catalytic converter has been added for both bands.

Improved Engine Reliability

- Electric fan control has been changed.

Improved Engine Performance

- Intake manifold communication control (IMCC) system has been adopted.
- Electric spark advance (ESA) control has been changed.

Reduced Fuel Vapor

- Mechanical returnless fuel system has been adopted.

System Simplification

- Controller area network (CAN) for communication with TCM has been adopted.
- ECT signal output function has been adopted.

Improved Serviceability

- The number of DTCs and PIDs has been increased to provide more detailed information.
- MIL has been adopted to indicate the malfunction in the engine control system.

End Of Sec

SPECIFICATIONS

AME420218881W03

Item		Specifications	
		New MPV (LW) AJ engine model	Previous MPV (LW) GY engine model
Air cleaner element	Type	Paper element (oil permeated)	
Idle air control (IAC) valve	Type	Duty control	
Fuel injector	Fuel delivery type	Top-feed	
	Drive type	Voltage	
Pressure regulator	Regulating pressure (kPa {kgf/cm^2, psi})	444—456 {4.53—4.64, 64.4—66.1}	380—420 {3.8—4.3, 55—61}
Fuel pump	Type	Impeller (in-tank)	
Fuel tank	Capacity (L {US gal, Imp gal)	75.0 {19.8, 16.5}	70.0 {18.5, 15.4}
Fuel	Specification	Unleaded (RON 95 or higher)	
Catalyst	Type	WU-TWC, TWC (monolithic)	TWC (monolithic)*1
EGR control	Type	Stepping motor	
Evaporative emission control system	Type	Canister	
PCV system	Type	Closed	

*1 : Australian specs

Bold frames:New specifications

End Of Ste

CONTROL SYSTEM DIAGRAM

AME420218881W04

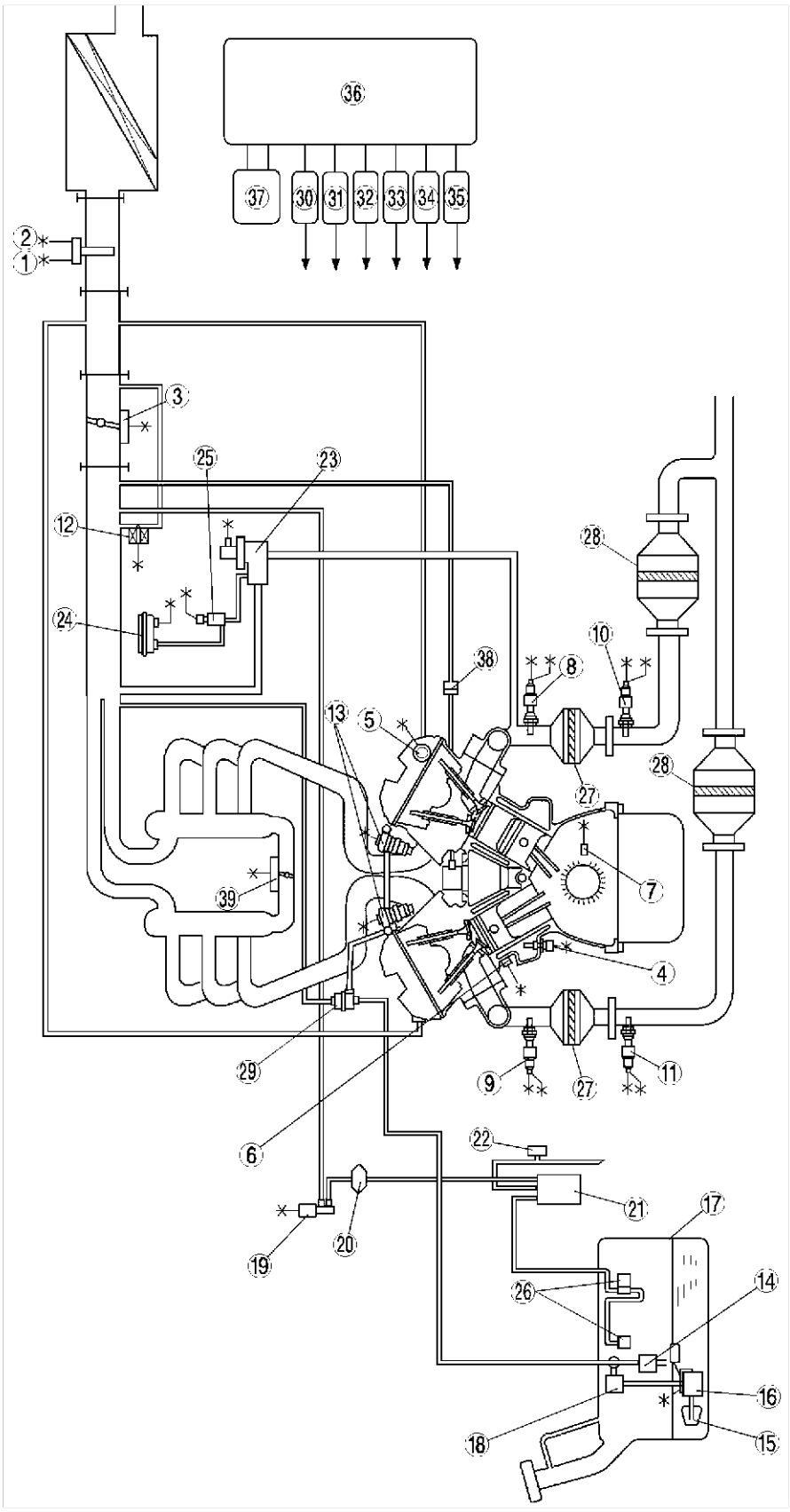

AME4202W001

1	IAT sensor
2	MAF sensor
3	TP sensor
4	ECT sensor
5	CMP sensor
6	Knock sensor
7	CKP sensor
8	HO2S (front, RH) (integrated with front HO2S heater)
9	HO2S (front, LH) (integrated with front HO2S heater)
10	HO2S (rear, RH) (integrated with rear HO2S heater) (European (L.H.D.) specs.)
11	HO2S (rear, LH) (integrated with rear HO2S heater) (European (L.H.D.) specs.)
12	IAC valve
13	Fuel injector
14	Pressure regulator (equipped with fuel pump)
15	Fuel filter (low-pressure)
16	Fuel pump body
17	Fuel tank
18	Fuel filter (high-pressure)
19	Purge solenoid valve
20	Catch tank
21	Charcoal canister
22	Check valve
23	EGR valve
24	BARO sensor (European (L.H.D.) specs.), EGR boost sensor (Australian, General (L.H.D. R.H.D.) specs.)
25	EGR boost sensor solenoid valve (used for Australian, General (L.H.D. R.H.D.) specs.)
26	Rollover valve
27	WU–TWC
28	TWC
29	Pulsation damper
30	Ignition coil No.1
31	Ignition coil No.2
32	Ignition coil No.3
33	Ignition coil No.4
34	Ignition coil No.5
35	Ignition coil No.6
36	PCM
37	Generator
38	PCV valve
39	Intake manifold communication control (IMCC) actuator

End Of Sie

CONTROL SYSTEM WIRING DIAGRAM

With Immobilizer System

AME420218881W05

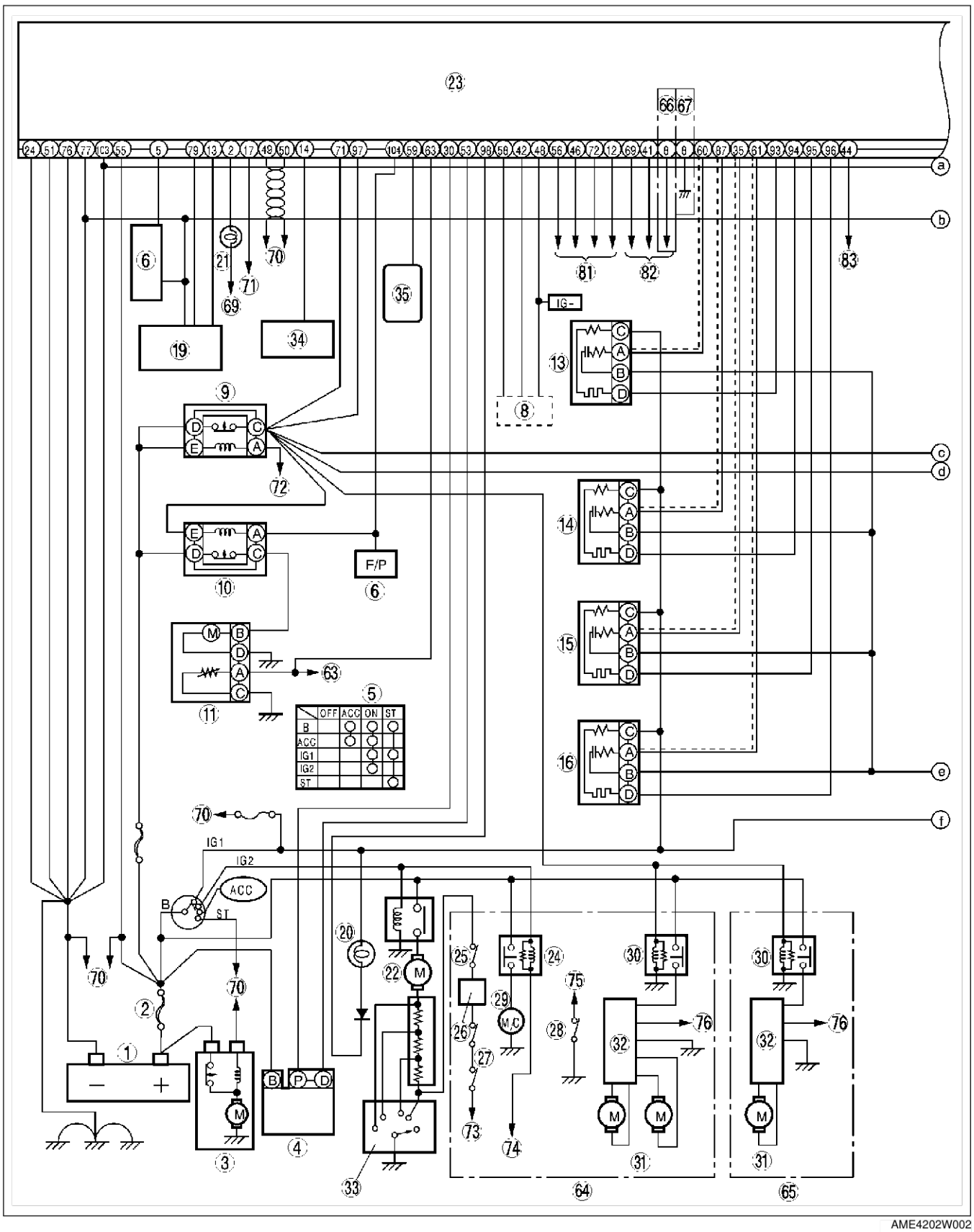

AME4202W002

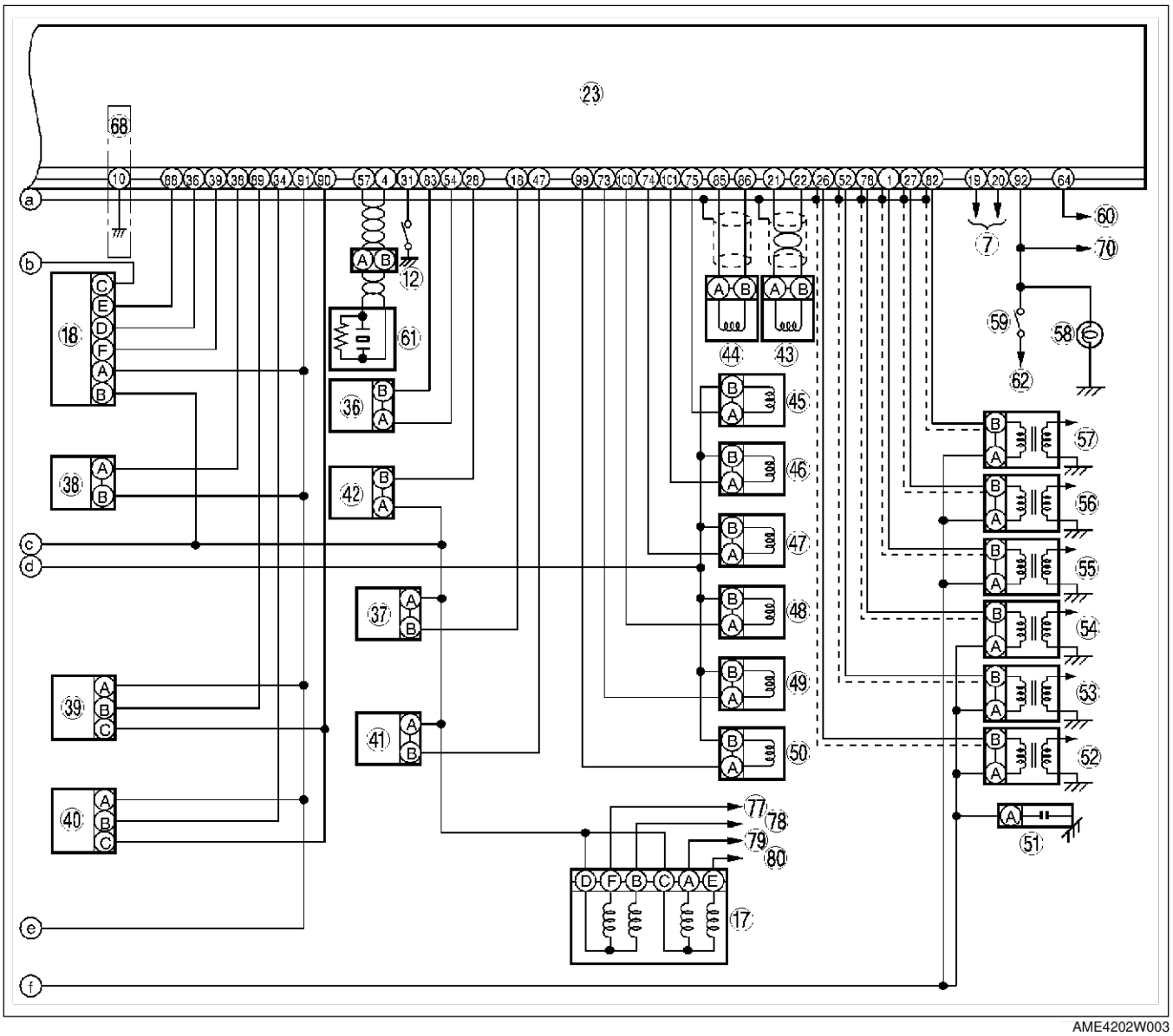
AME4202W003

Without Immobilizer System

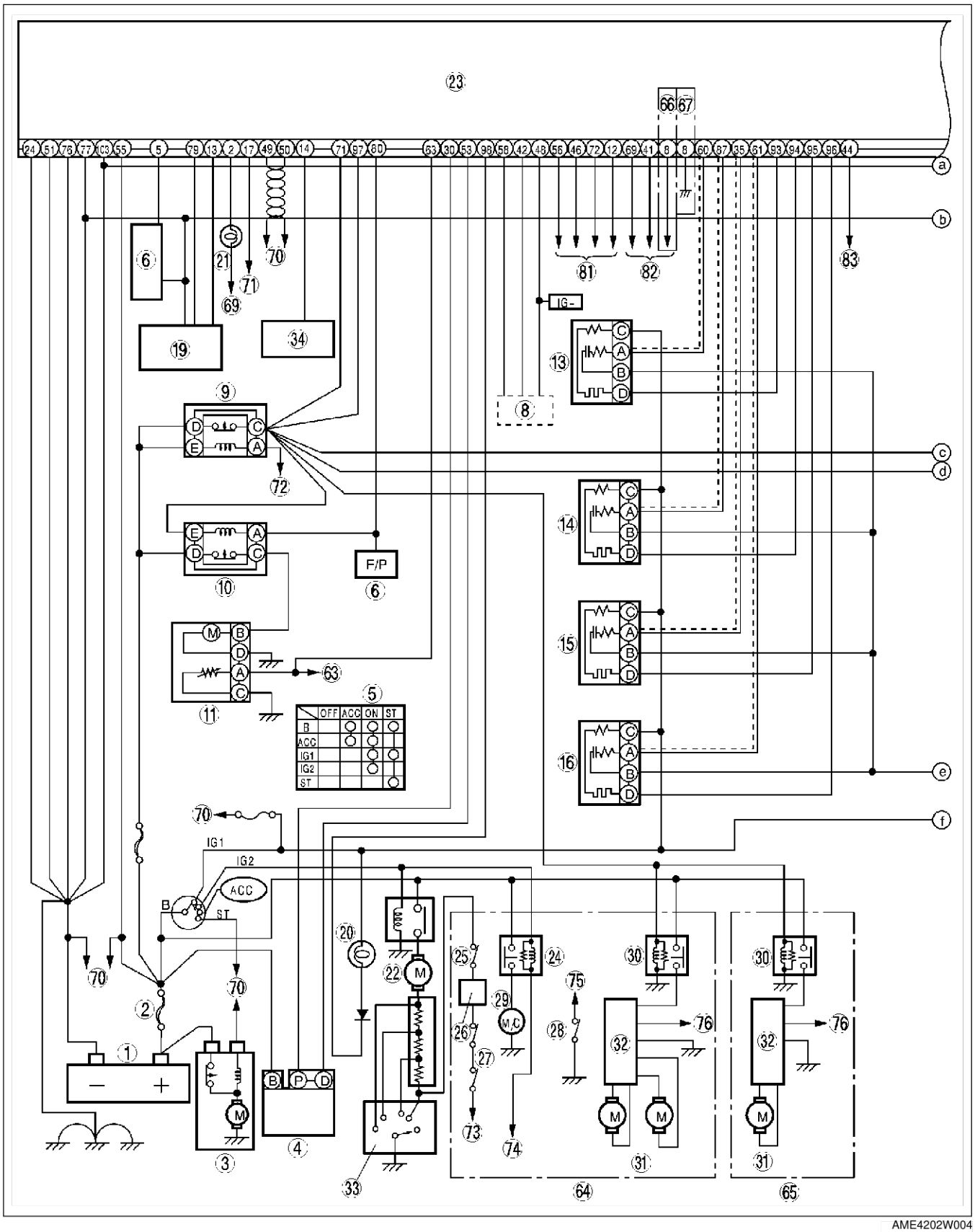

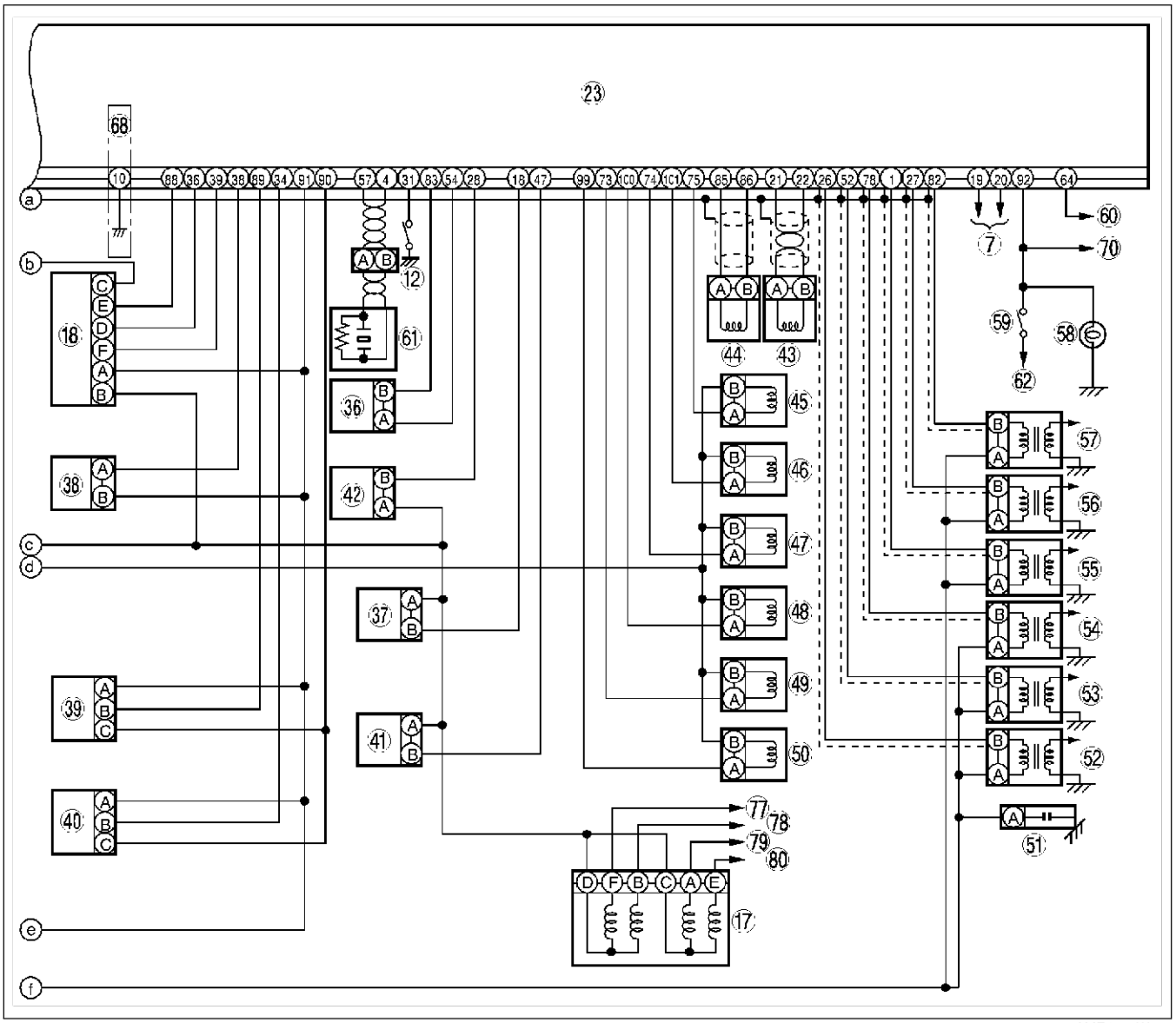

AME4202W005

1	Battery
2	Main fuse
3	Starter
4	Generator
5	Ignition switch
6	DLC
7	To ABS/TCS HU/CU
8	Instrument cluster
9	Main relay
10	Fuel pump relay
11	Fuel pump unit
12	PSP switch
13	HO2S (front, RH) (integrated with rear HO2S heater)
14	HO2S (front, LH) (integrated with front HO2S heater)
15	HO2S (rear, RH) (integrated with rear HO2S heater) (European (L.H.D.) specs.)
16	HO2S (rear, LH) (integrated with front HO2S heater) (European (L.H.D.) specs.)

17	EGR valve
18	MAF/IAT sensor
19	DLC-2
20	Generator warning light
21	MIL
22	Blower motor
23	PCM
24	A/C relay
25	A/C switch
26	A/C amplifier
27	Refrigerant pressure switch (low and high pressure)
28	Refrigerant pressure switch (middle pressure)
29	A/C compressor
30	Fan relay
31	Fan motor
32	Fan control module
33	Fan switch
34	Microcomputer (DIS)
35	Immobilizer unit

36	IAC valve
37	Purge solenoid valve
38	ECT sensor
39	TP sensor
40	BARO sensor (European (L.H.D.) specs.), EGR boost sensor (Australian, General (L.H.D. R.H.D.) specs.)
41	EGR boost sensor solenoid valve (used for Australian, General (L.H.D. R.H.D.) specs.)
42	Intake manifold communication control (IMCC) actuator
43	CMP sensor
44	CKP sensor
45	Fuel injector No.1
46	Fuel injector No.2
47	Fuel injector No.3
48	Fuel injector No.4
49	Fuel injector No.5
50	Fuel injector No.6
51	Condenser
52	Ignition coil No.1
53	Ignition coil No.2
54	Ignition coil No.3
55	Ignition coil No.4
56	Ignition coil No.5
57	Ignition coil No.6
58	Brake light
59	Brake switch
60	To TR switch
61	Knock sensor
62	To battery
63	To instrument cluster
64	With A/C
65	Without A/C
66	European (L.H.D.) specs.
67	Australian, General (L.H.D. R.H.D.) specs.
68	Australian specs.
69	To IG1
70	To TCM
71	To main relay terminal A
72	To PCM terminal 17
73	To PCM terminal 41
74	To PCM terminal 69
75	To PCM terminal 8
76	To PCM terminal 44
77	To PCM terminal 56
78	To PCM terminal 46
79	To PCM terminal 72
80	To PCM terminal 12
81	To EGR valve
82	To A/C system
83	To fan control module

End Of Sie

INTAKE-AIR SYSTEM

INTAKE-AIR SYSTEM OUTLINE

AME421013000W01

- The intake-air system construction and operation of MPV (LW) AJ engine model is the same as the MPV (LW) GY engine model, except for following.
  - — The Intake Manifold Communication Control (IMCC) system components have been adopted, that same function as the Variable resonance induction system (VRIS) of the MAZDA Xedos9 and Eunos 800.
  - — The IAC valve has been changed. However, it is the same as the TRIBUTE (U0) AJ engine model. (See TRIBUTE Powertrain Control/Emissions Diagnosis 0146-1*-00L)

×: Applicable
—: Not applicable

Item	New MPV (LW) AJ	Previous MPV (LW) GY	Remark for new model
Fresh-air duct	x	x	Same function as previous MPV (LW) GY engine models
Resonance chamber	x	x	Same function as previous MPV (LW) GY engine models
Air cleaner	x	x	Same function as previous MPV (LW) GY engine models
IAC valve	x	x	Same as current TRIBUTE (U0) AJ engine models
Throttle body	x	x	Same function as previous MPV (LW) GY engine models
Dynamic chamber	x	x	Same function as previous MPV (LW) GY engine models
Intake manifold	x	x	Same function as previous MPV (LW) GY engine models
IMCC system	x	–	Same function as VRIS of current Xedos9 and Eunos 800 (TA) KL engine models

INTAKE-AIR SYSTEM STRUCTURAL VIEW

AME421013000W02

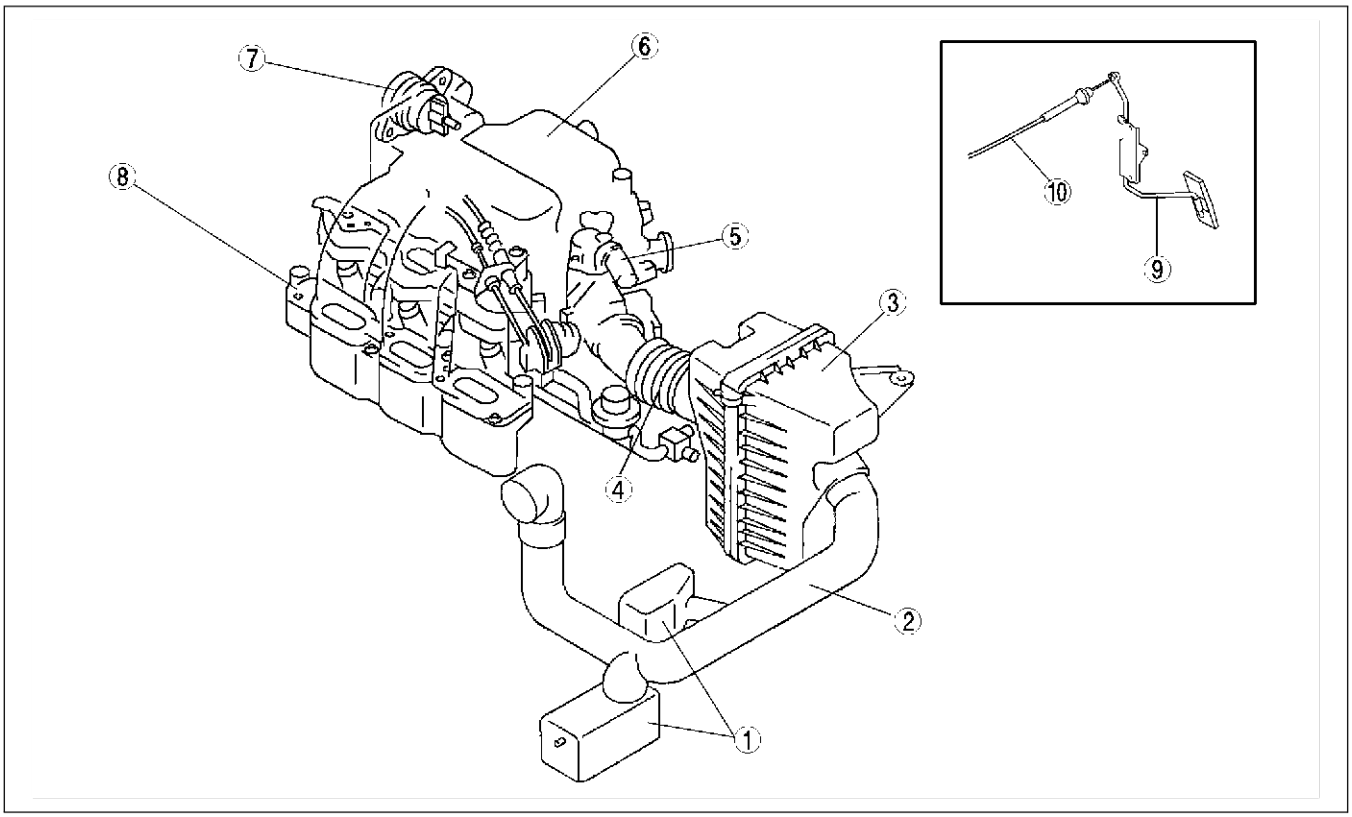

AME4210W012

1	Resonance chamber
2	Fresh-air duct
3	Air cleaner
4	Air hose
5	IAC valve

6	Dynamic chamber
7	IMCC actuator
8	Intake manifold
9	Accelerator pedal
10	Accelerator cable

INTAKE-AIR SYSTEM FLOW DIAGRAM

AME421013000W03

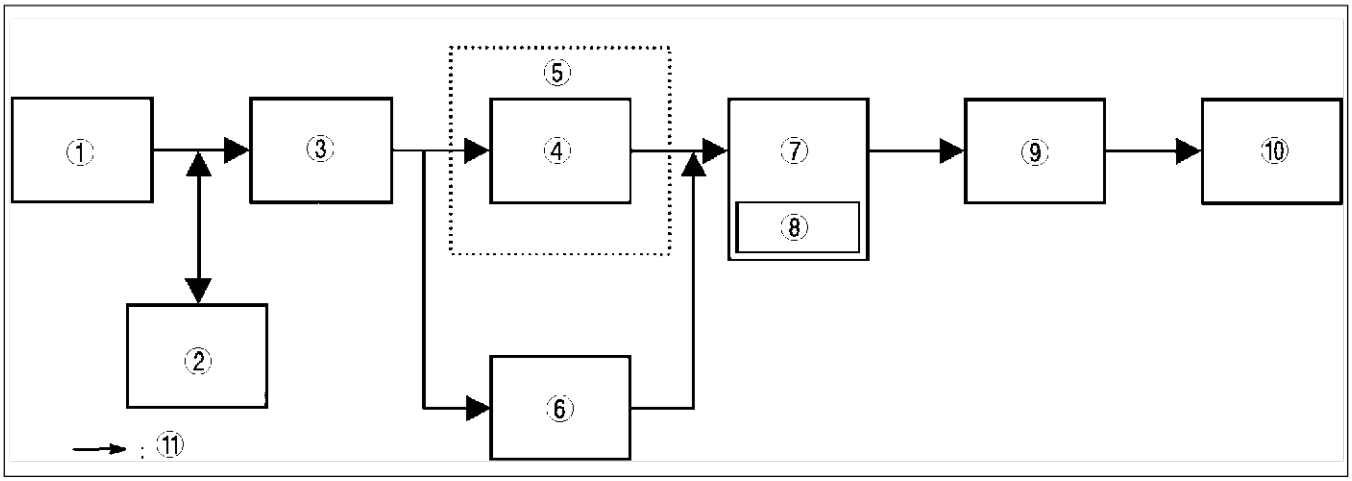

AME4210W102

1	Fresh-air duct
2	Resonance chamber
3	Air cleaner
4	Throttle valve
5	Throttle body
6	IAC valve

7	Dynamic chamber
8	IMCC actuator
9	Intake manifold
10	Combustion chamber
11	Intake air flow

INTAKE MANIFOLD COMMUNICATION CONTROL (IMCC) SYSTEM OUTLINE

AME421018701W01

- Due to the adoption of an IMCC system, higher engine torque has been obtained at all engine speeds.
- The IMCC system concept is the same as the variable resonance induction system (VRIS).

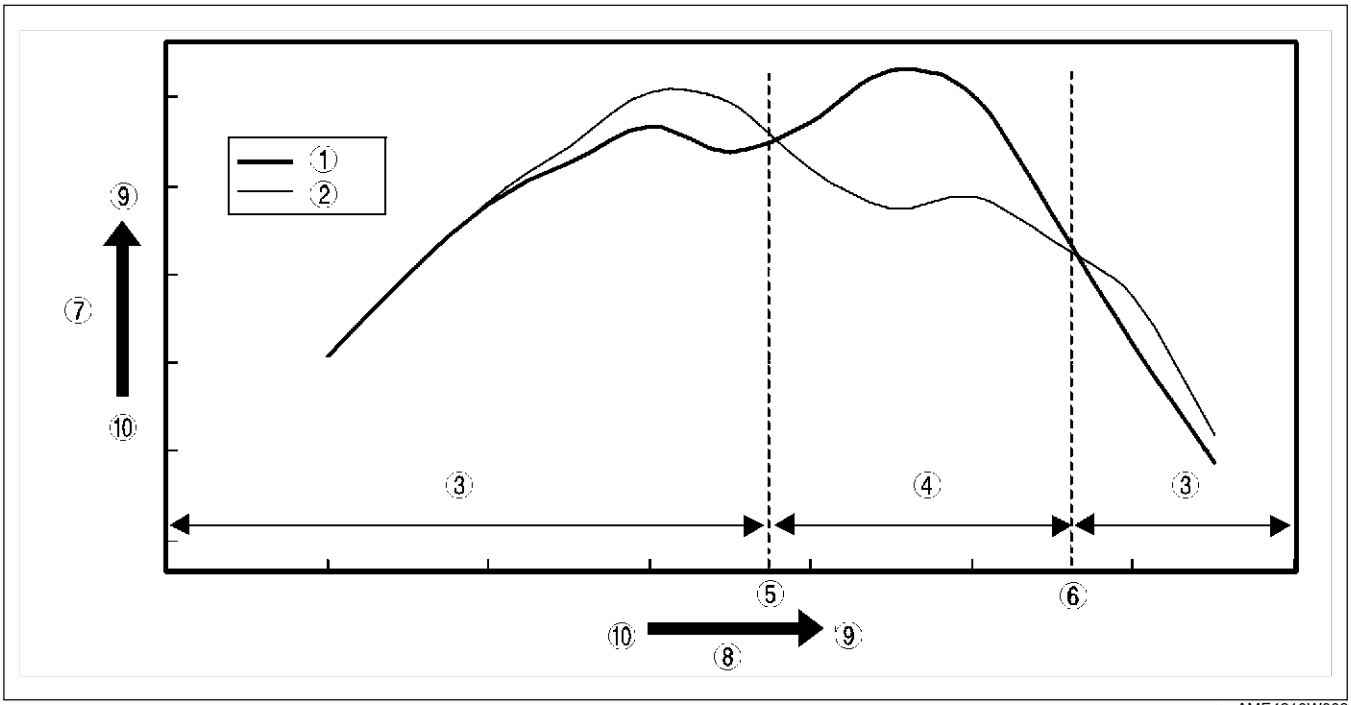

AME4210W009

1	IMCC open
2	IMCC close
3	IMCC valve close
4	IMCC valve open
5	**Approx 3,750 rpm**

6	**Approx 5,560 rpm**
7	Engine torque
8	Engine speed
9	High
10	Low

End Of Sie

INTAKE MANIFOLD COMMUNICATION CONTROL (IMCC) SYSTEM STRUCTURAL VIEW

AME421018701W02

Structure

- The IMCC system is composed of the IMCC actuator.
- The IMCC actuator is installed to the dynamic chamber.

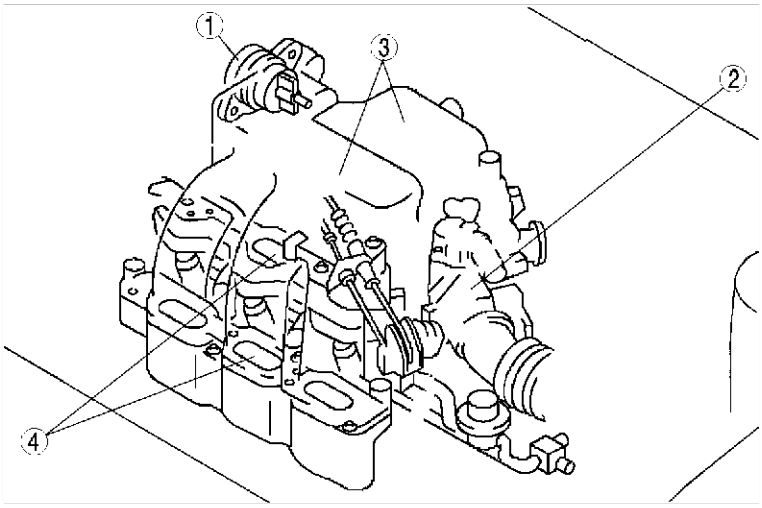

AME4210W010

1	IMCC actuator
2	Throttle body

3	Dynamic chamber
4	Intake manifold

End Of Sie

INTAKE MANIFOLD COMMUNICATION CONTROL (IMCC) SYSTEM DESCRIPTION

AME421018701W03

Operation

- The IMCC valve opens when it receives the IMCC operation signal from the PCM at an engine speed of **3,750 rpm** and closes again at **5,560 rpm**.
- Generation of rebound pressure waves begins from the shaded areas on the throttle body side, producing an inertia charging effect.

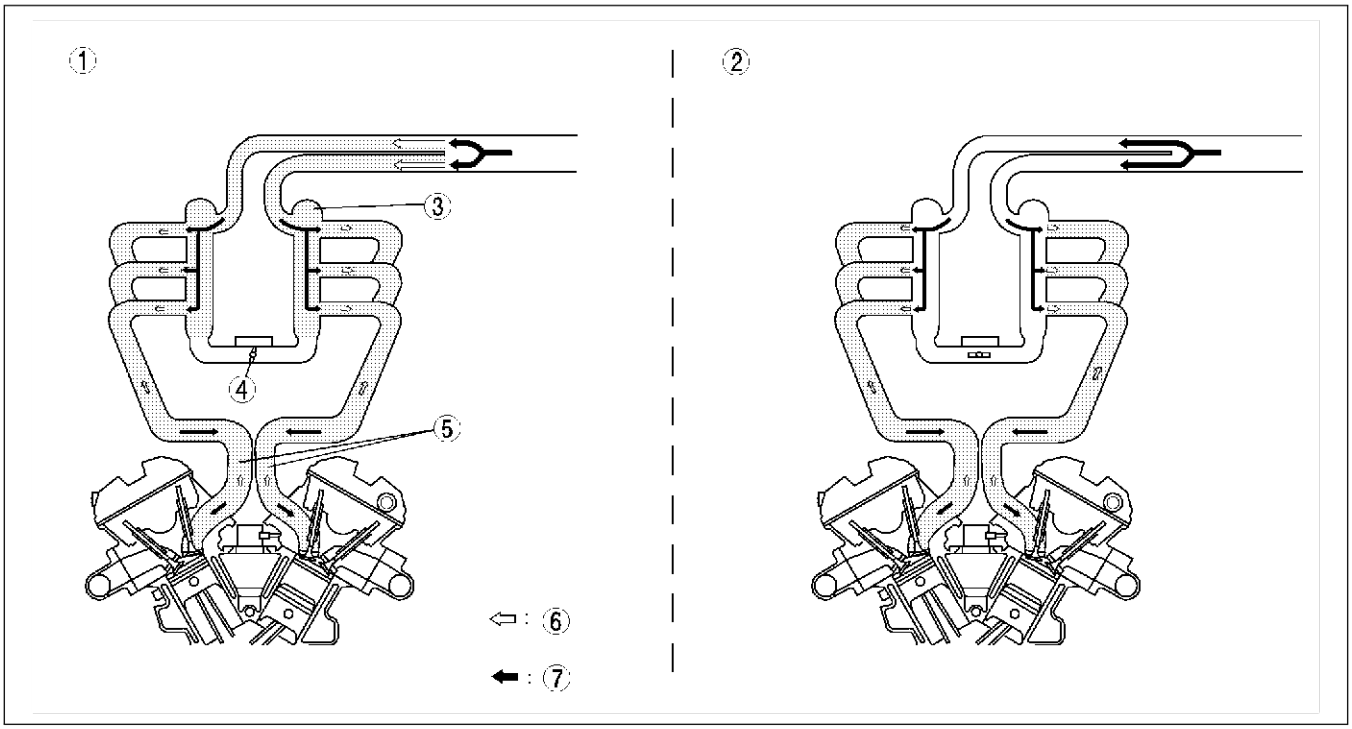

AME4210W011

1	IMCC valve closed **below 3,750 rpm** or **above 5,560 rpm**
2	IMCC valve open **3,750—5,560 rpm**
3	Dynamic chamber

4	IMCC valve
5	Intake manifold
6	Rebound pressure waves
7	Intake air

End Of Sta

INTAKE MANIFOLD COMMUNICATION CONTROL (IMCC) ACTUATOR DESCRIPTION

AME421018701W04

Function

- IMCC actuator actuates the valve according to the signal from the PCM.

Structure

- The IMCC actuator is composed of the motor and valve.

Operation

- When the IMCC actuator receives a open signal from the PCM, a valve is turned to **approx. 90 degree**.

1	De-energized
2	Energized
3	Motor
4	Valve

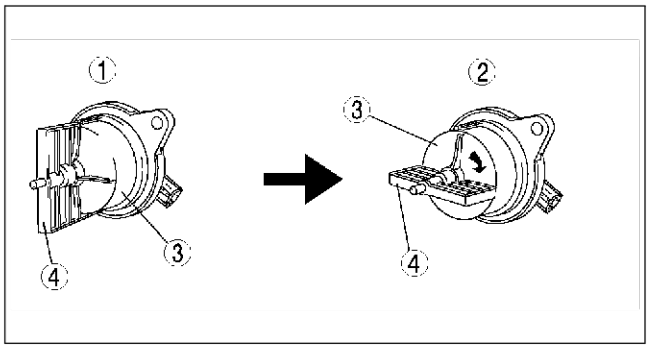

AME4210W008

End Of Sta

FUEL SYSTEM

FUEL SYSTEM OUTLINE

AME421201006W01

- The fuel system construction and operation of new MPV (LW) AJ engine model is the same as the previous MPV (LW) GY engine model, except for following.
  - — Mechanical returnless fuel system has been adopted.
    - Fuel line pressure has been increased.
    - Pressure regulator has been built in the the fuel pump unit.
  - — Fuel tank capacity has been increased to **75 L {19.8 US gal, 16.5 Imp gal}**.
  - — Quick release connector (fuel tank side) has been changed, that is same as Quick release connector (engine room side).

×: Applicable
—: Not applicable

Item	New MPV (LW) AJ	Previous MPV (LW) GY	Remark for new model
Mechanical returnless fuel system	x	–	Same function as current MX-5 (NB) BP engine models
Fuel injector	x	x	Same function as previous MPV (LW) GY engine models
Pulsation damper	x	x	Same function as previous MPV (LW) GY engine models
Quick release connector (fuel distributor side)	x	x	Same function as previous MPV (LW) GY engine models
Quick release connector (engine room side)	x	x	Same as previous MPV (LW) GY engine models
Quick release connector (fuel tank side)	x	x	Same as quick release connector (engine room side) of previous MPV (LW) GY engine models
Fuel tank	x	x	Same function as previous MPV (LW) GY engine models Increased fuel tank capacity
Fuel pump unit (built in pressure regulator and fuel filter (high & low pressure))	x	x	Same function as previous MPV (LW) GY engine models pressure regulator has been built in.
Nonreturn valve	x	x	Same function as previous MPV (LW) GY engine models

End Of Sie

FUEL SYSTEM STRUCTURAL VIEW

AME421201006W02

Engine Room Side

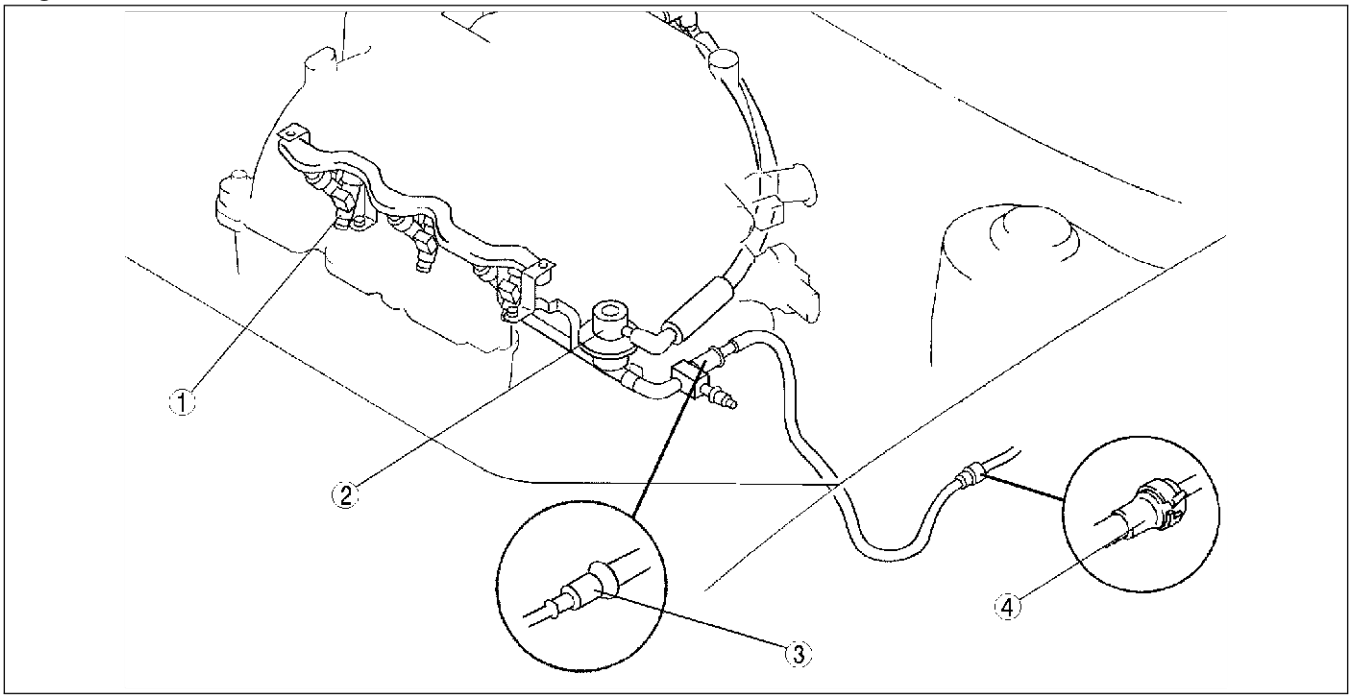

AME4212W014

1	Fuel injector
2	Pulsation damper

3	Quick release connector (fuel distributor side)
4	Quick release connector (engine room side)

Fuel tank side

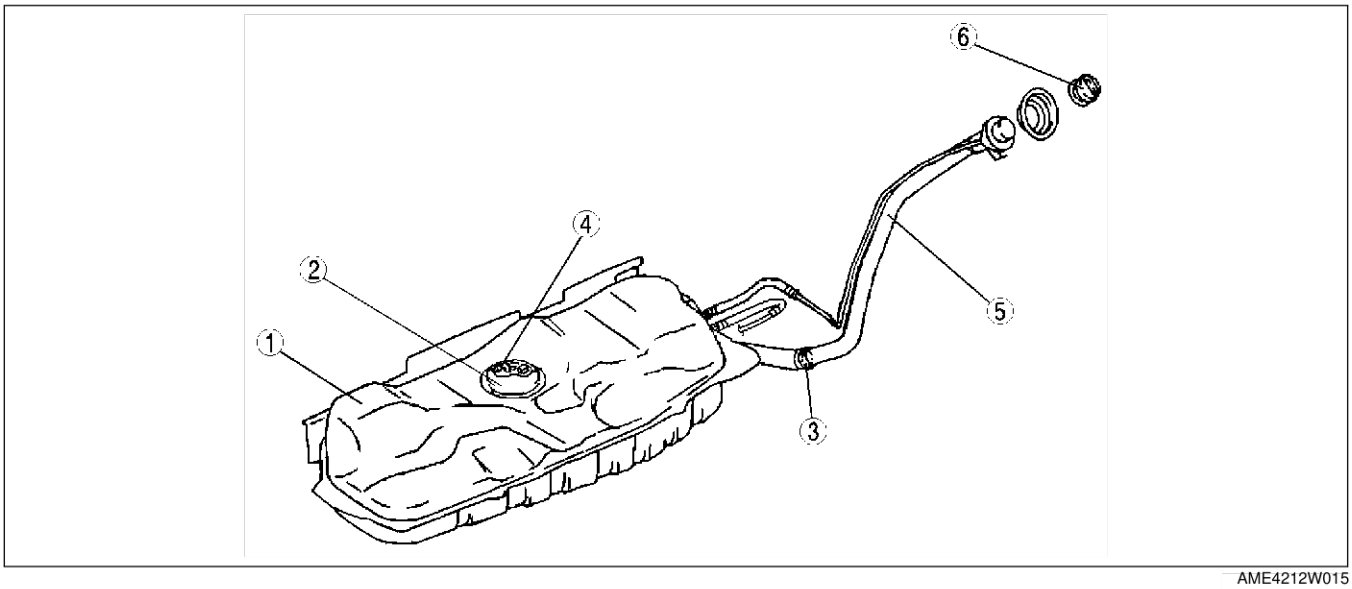

AME4212W015

1	Fuel tank
2	Fuel pump unit
3	Nonreturn valve

4	Quick release connector (fuel tank side)
5	fuel-filler pipe
6	Fuel-filler cap

End Of Sta

FUEL SYSTEM DIAGRAM

AME421201006W03

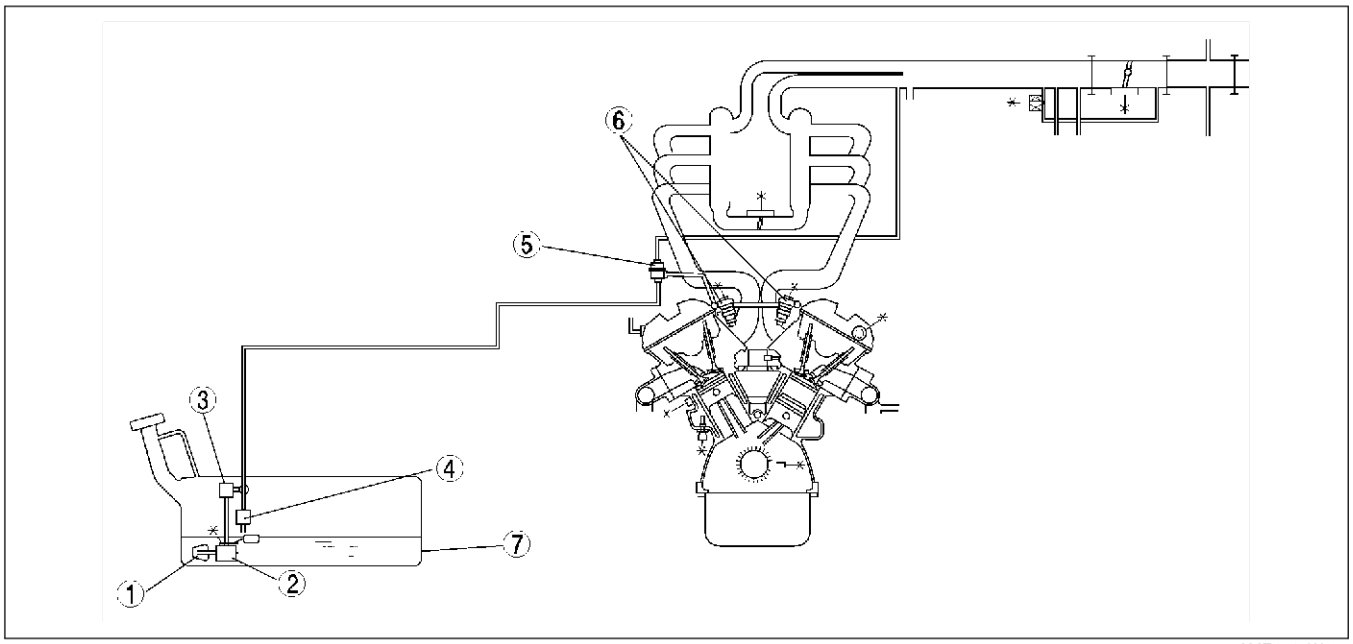

AME4212W100

1	Fuel filter (low-pressure)
2	Fuel pump
3	Fuel filter (high-pressre)
4	Pressure regulator

5	Pulsation damper
6	Fuel injector
7	fuel tank

End Of Sie

FUEL PUMP UNIT DESCRIPTION

AME421213350W01

Structure

- Due to increase in exhaust amount of engine, fuel flow amount has been increased.
- Due to the adoption of the mechanical returnless fuel system, fuel discharge pressure has been increased.

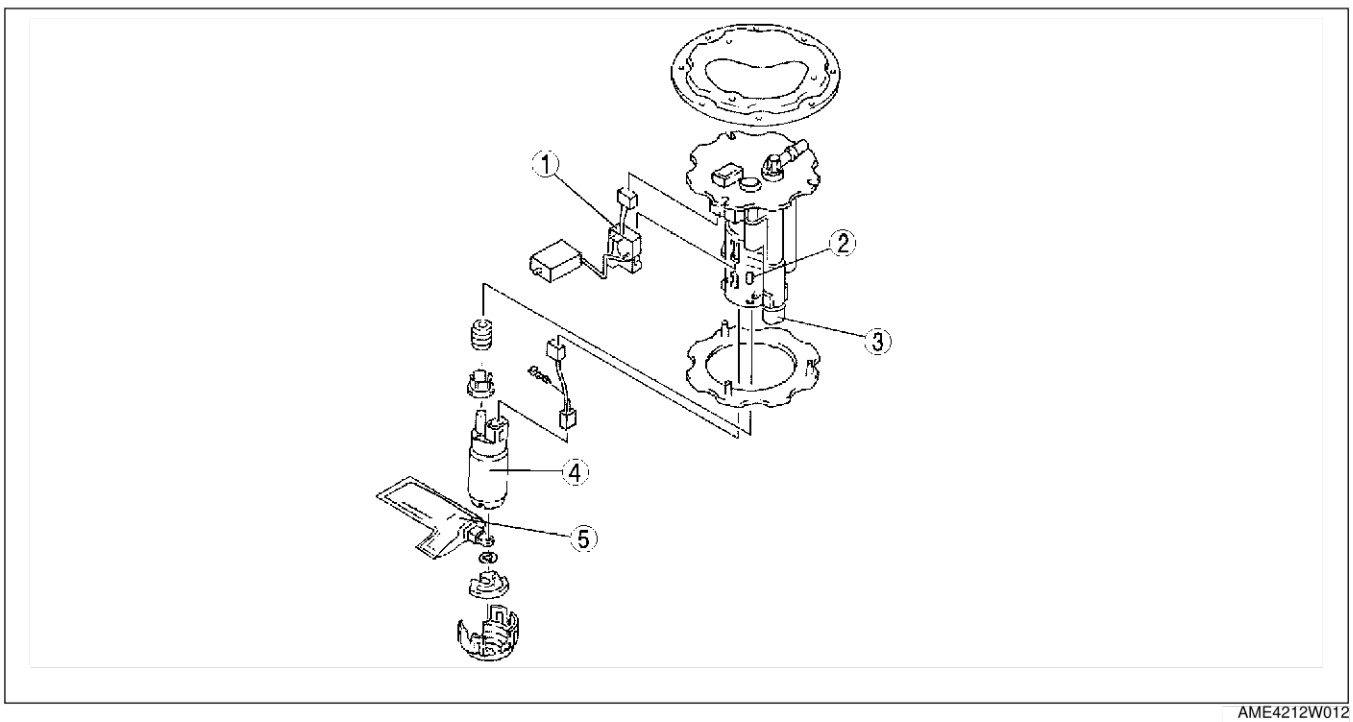

AME4212W012

1	Fuel gauge sender unit
2	Fuel filter (high-pressure)
3	Pressure regulator

4	Fuel pump
5	fuel filter (low-pressure)

Fuel Flow

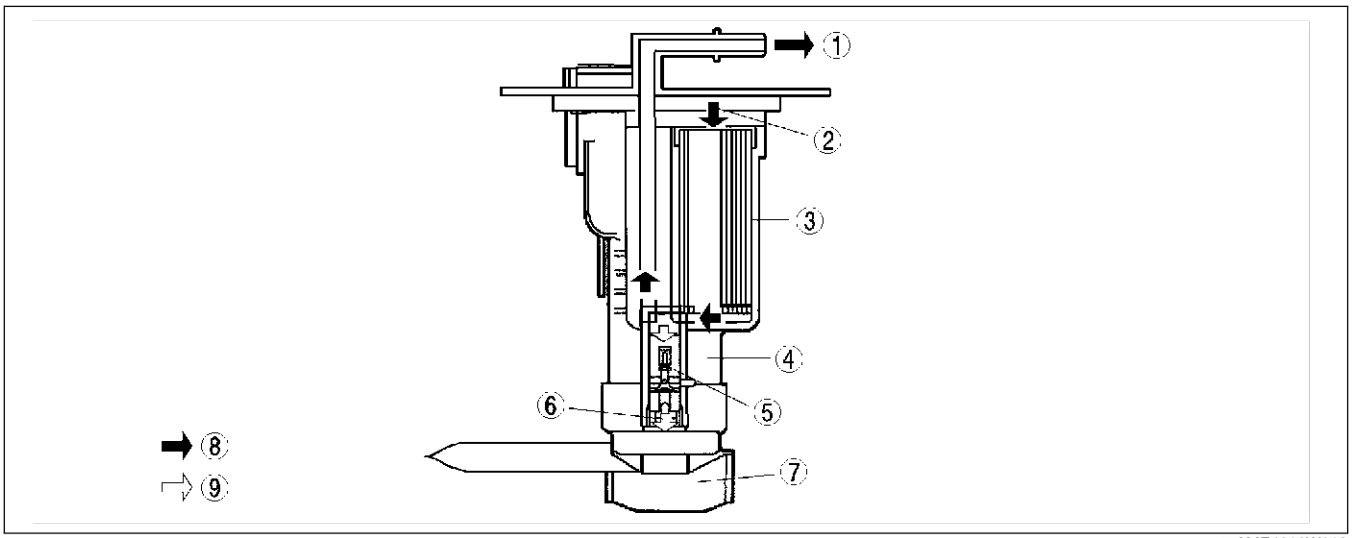

AME4212W013

1	To fuel distributor
2	From fuel pump
3	Fuel filter (high-pressure)
4	Fuel pump
5	Pressure regulator

6	Return to fuel tank
7	Fuel filter (low-pressure)
8	Main fuel flow
9	Return fuel flow

End Of Sec

EXHAUST SYSTEM

EXHAUST SYSTEM OUTLINE

AME421440000W01

- Exhaust pipe layout has changed due to the change in engine displacement, resulting in improved exhaust efficiency.

End Of Sec

EXHAUST SYSTEM STRUCTURAL VIEW

AME421440000W02

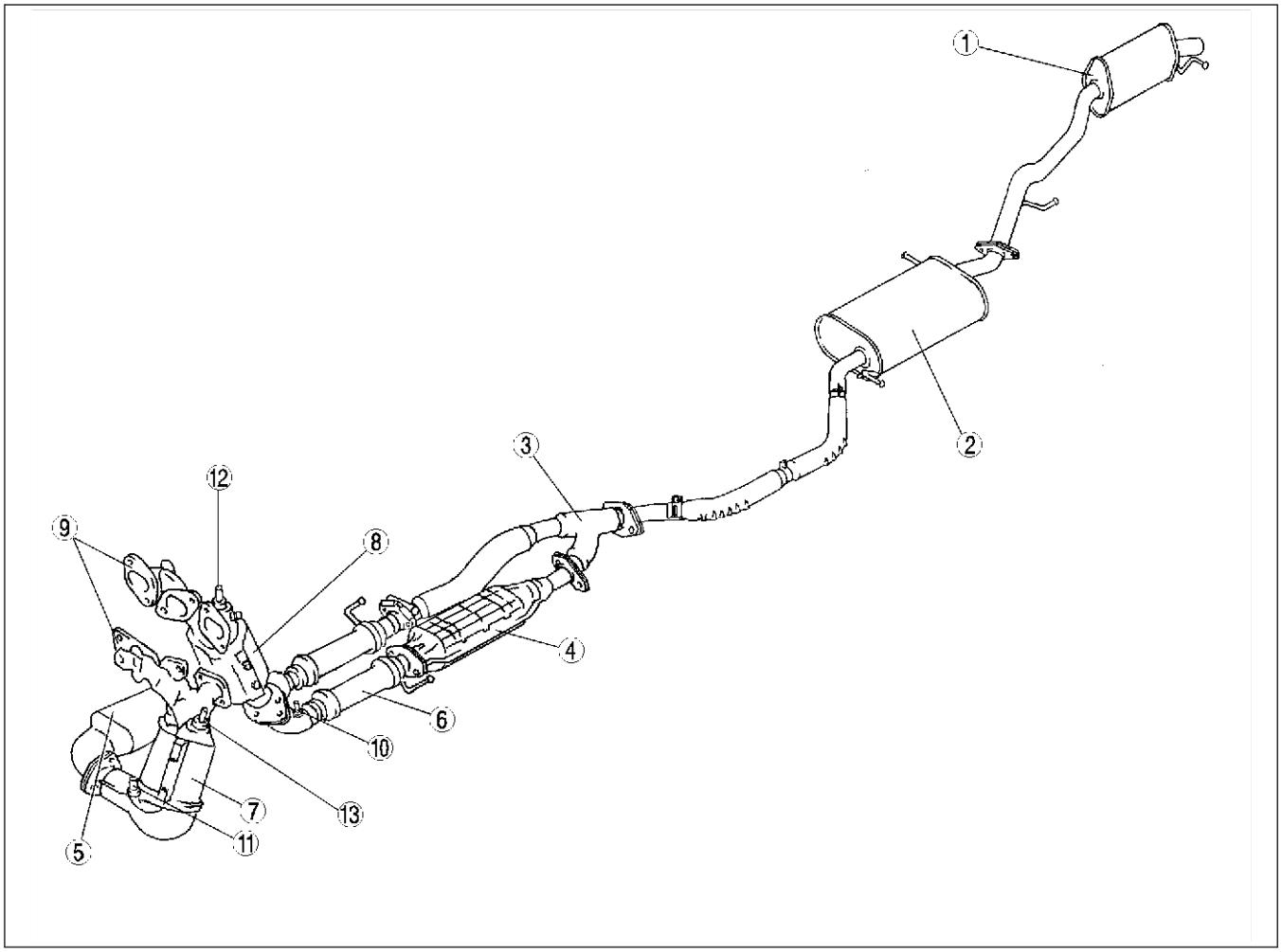

AME4214W005

1	After silencer
2	Main silencer
3	Middle pipe
4	TWC (RH)
5	TWC (LH) (with flexible pipe)
6	Front pipe (with flexible pipe)
7	WU-TWC (LH)

8	WU-TWC (RH)
9	Exhaust manifold
10	HO2S (rear RH) (European (L.H.D.) specs)
11	HO2S (rear LH) (European (L.H.D.) specs)
12	HO2S (front RH)
13	HO2S (front LH)

End Of Sec

EMISSION SYSTEM

EMISSION SYSTEM OUTLINE

AME421601007W01

- The emission system construction and operation of MPV (LW) AJ engine model is the same as the MPV (LW) GY engine model, except for following.
  — Due to the layout change in the exhaust system, a TWC has been added.

×: Applicable
—: Not applicable

Item	New MPV (LW) AJ	Previous MPV (LW) GY	Remark for new model
Purge solenoid valve	x	x	Same function as previous MPV (LW) GY engine models
Catch tank	x	x	Same as previous MPV (LW) GY engine models
Evaporative check valve	x	x	Same as previous MPV (LW) GY engine models
Charcoal canister	x	x	Same as previous MPV (LW) GY engine models
Rollover valve	x	x	Same as previous MPV (LW) GY engine models
EGR valve	x	x	Same as previous MPV (LW) GY engine models
WU-TWC	x	x	Same function as previous MPV (LW) GY engine models
TWC	x	–	Same function as WU-TWC of previous MPV (LW) GY engine models
Oil separator	x	x	Same as previous MPV (LW) GY engine models
PCV valve	x	x	Same as previous MPV (LW) GY engine models
Ventilation hose	x	x	Same function as previous MPV (LW) GY engine models

End Of Sta

EMISSION SYSTEM STRUCTURAL VIEW

AME421601007W02

Engine Room Side

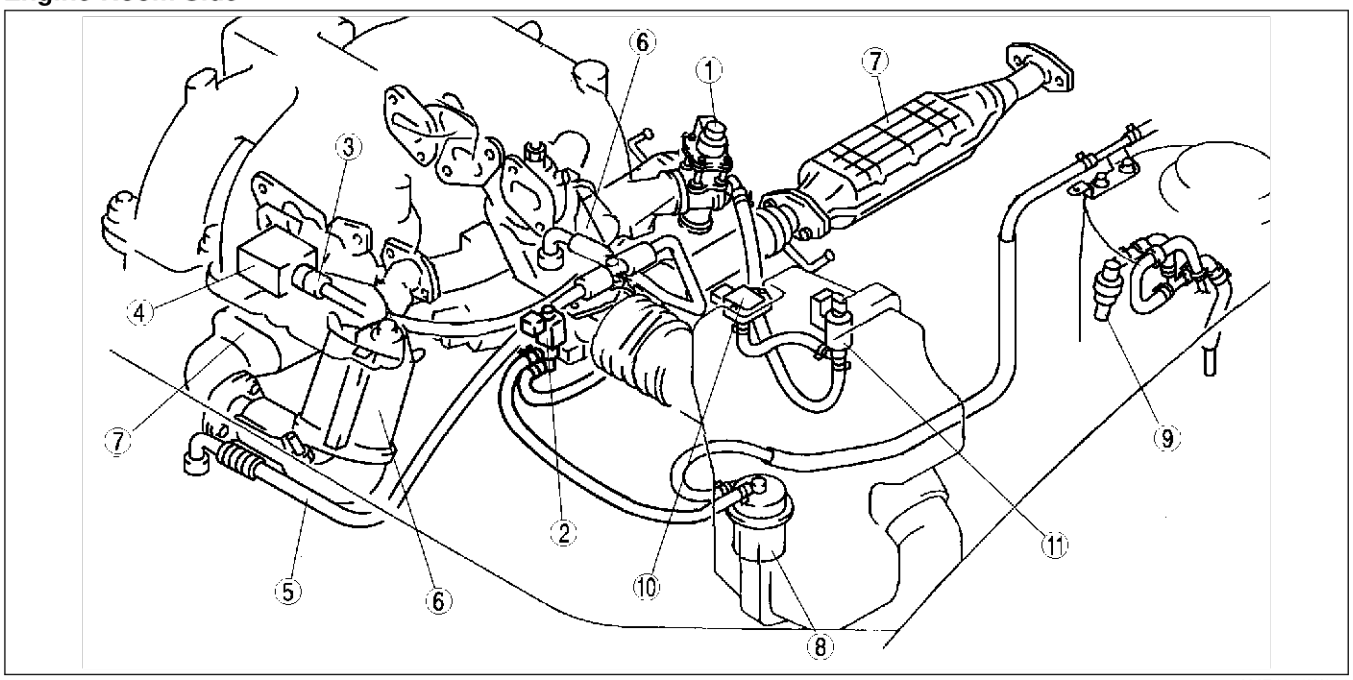

AME4216W001

Fuel Tank Side

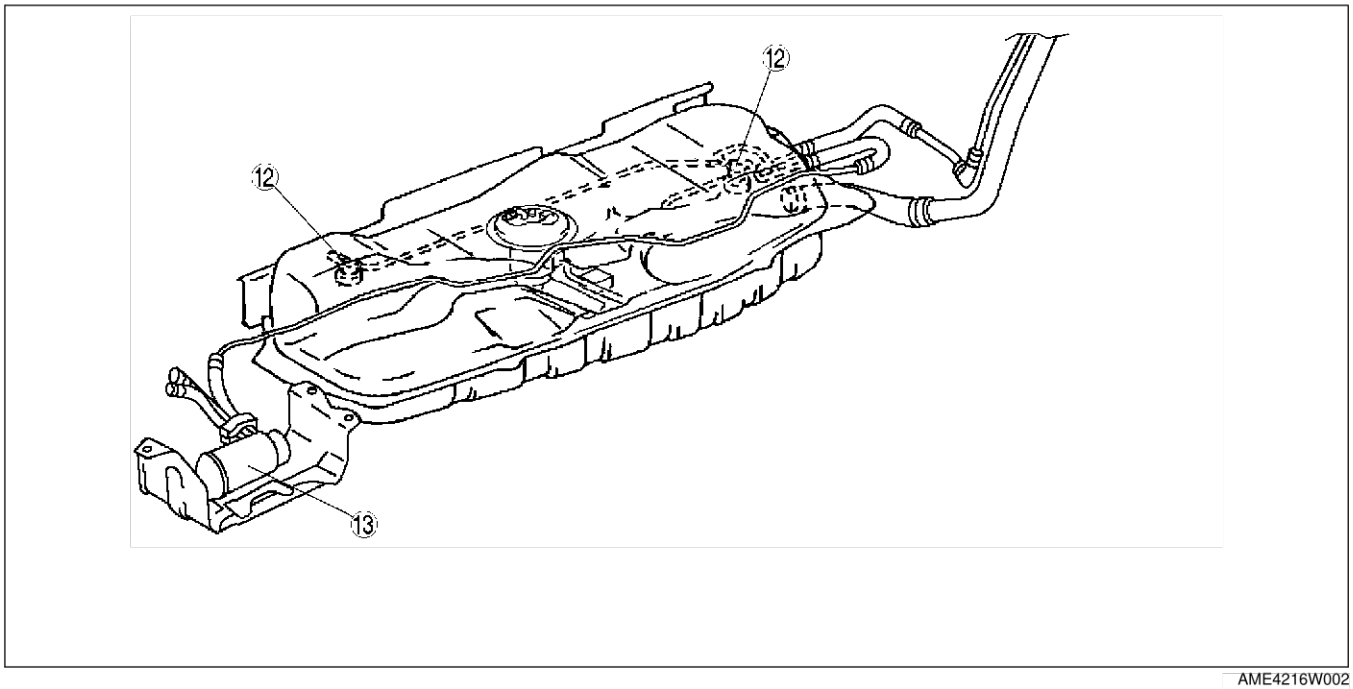

AME4216W002

1	EGR valve
2	Purge solenoid valve
3	PCV valve
4	Oil separator
5	Ventilation hose
6	WU-TWC (Except Genaral (L.H.D.) specs)
7	TWC

8	Catch tank
9	Evaporative gas check valve (one-way)
10	EGR boost sensor
11	EGR boost sensor solenoid valve
12	Rollover valve
13	Charcoal canister

End Of Sie

CONTROL SYSTEM

OUTLINE

AME424018881W01

- The construction and operation of the control system is essentially carried over from that of the current MPV (LW) GY engine model, except for the following. (See MPV Training Manual 3340-1*-99F.)
  - — BARO sensor for barometric pressure detection has been adopted. (European (L.H.D.) specs.)
  - — EGR boost sensor for EGR monitor and barometric pressure detection has been adopted. (Australian, General (L.H.D. R.H.D.) specs.)
  - — Rear HO2S (RH, LH) has been adopted. (European (L.H.D.) specs.)
  - — The intake manifold communication control (IMCC) system has been adopted to increase the engine torque.
  - — Electric distribution ignition function of electric spark advance (ESA) system has been changed.
  - — Electric fan control has been changed.
  - — Controller area network (CAN) for communication with TCM has been adopted.
  - — ECT signal output function has been adopted for system simplification.
- The shape and the construction of the parts in the control system have been changed due to the adoption of the AJ engine. A comparison of major parts for the MPV (LW) AJ engine model and the MPV (LW) GY engine model is as shown.

Input Device

×: Applicable
—: Not applicable

F4

Item	Signal	MPV (LW) AJ engine model	MPV (LW) GY engine model	Remarks for new model
MAF sensor	MAF	×	×	Same as MPV (LW) GY engine model
IAT sensor	IAT	×	×	Same as MPV (LW) GY engine model
TP sensor	TP	×	×	Same function as MPV (LW) GY engine model
ECT sensor	ECT	×	×	Same function as MPV (LW) GY engine model
CMP sensor	Cylinder identification	×	×	Same as MPV (LW) GY engine model
CKP sensor	Engine revolution	×	×	Same as MPV (LW) GY engine model
Knock sensor	Knocking	×	×	Same as MPV (LW) GY engine model
HO2S (front)	Oxygen concentration	×	×	Same function as MPV (LW) GY engine model
HO2S (rear)	WU-TWC (front) condition	×*1	–	Same function as MPV (LW) FS engine model
BARO sensor	Barometric pressure	×*1	–	Same function as MPV (LW) FS engine model
EGR boost sensor	Barometric pressure/ intake manifold pressure	×*2	–	Same function as BARO sensor for MPV (LW) FS engine model
TR switch	Load/no load detection	×	×	Same function as MPV (LW) GY engine model
PSP switch	Power steering oil pump load condition	×	×	Same function as MPV (LW) GY engine model
VSS	VSS	×	×	Same as MPV (LW) GY engine model
Brake switch	Deceleration detection	×	×	Same function as MPV (LW) GY engine model
A/C switch	A/C operational	×	×	Same function as MPV (LW) GY engine model
Refrigerant pressure switch (middle pressure)	Refrigerant pressure (middle pressure)	×*1	×	Same function as MPV (LW) GY engine model

Item	Signal	MPV (LW) AJ engine model	MPV (LW) GY engine model	Remarks for new model
DLC (TEN terminal)	Diagnostic test mode switching	×	×	Same function as MPV (LW) GY engine model
Battery	Back-up power supply	×	×	Same function as MPV (LW) GY engine model
Generator (terminal P: output voltage)	Generator output voltage	×	×	Same function as MPV (LW) GY engine model
Immobilizer unit	Immobilizer system communication	×	×	Same function as MPV (LW) GY engine model
TCM	Torque reduction	×	–	Newly adopted

*1 : European (L.H.D.) specs.
*2 : Australian, General (L.H.D. R.H.D.) specs.

Output Device

×: Applicable
—: Not applicable

Item	Signal	MPV (LW) AJ engine model	MPV (LW) GY engine model	Remarks for new model
IAC valve	IAC	×	×	Same function as MPV (LW) GY engine model
IMCC actuator	IMCC	×	–	Newly adopted
Fuel injector	Fuel injection	×	×	Same function as MPV (LW) GY engine model
Fuel pump relay	Fuel pump control	×	×	Same function as MPV (LW) GY engine model
Ignition coil	ESA control	×	×	Ignition coil creates secondary ignition energy and distributes it to each spark plug. The ignition coils ignite independently.
EGR valve	EGR control	×	×	Same function as MPV (LW) GY engine model
EGR boost sensor solenoid valve*2	EGR monitor	×	–	Newly adopted
Purge solenoid valve	Purge control	×	×	Same function as MPV (LW) GY engine model
HO2S heater (front)	HO2S heater (front) control	×	×	Same function as MPV (LW) GY engine model
HO2S heater (rear)	HO2S heater (rear) control	×*1	–	Same function as MPV (LW) FS engine model
Generator (terminal D: field coil)	Generator control	×	×	Same function as MPV (LW) GY engine model
Fan control module	Electrical fan control	×	–	Newly adopted
A/C relay	A/C cut-off control	×	×	Same function as MPV (LW) GY engine model
DLC-2 (terminal KLN)	On-board diagnostic system	×	×	Same function as MPV (LW) GY engine model
Instrument cluster	Water temperature gauge control	×	–	Newly adopted
	DIS display	×	×	Same function as MPV (LW) GY engine model
	MIL control	×	×	Same function as MPV (LW) GY engine model
	Generator warning light control	×	×	Same function as MPV (LW) GY engine model
TCM	Engine condition	×	–	Newly adopted

*1 : European (L.H.D.) specs.
*2 : Used for Australian, General (L.H.D. R.H.D.) specs.

End Of Sie

STRUCTURAL VIEW

AME424018881W02

L.H.D.

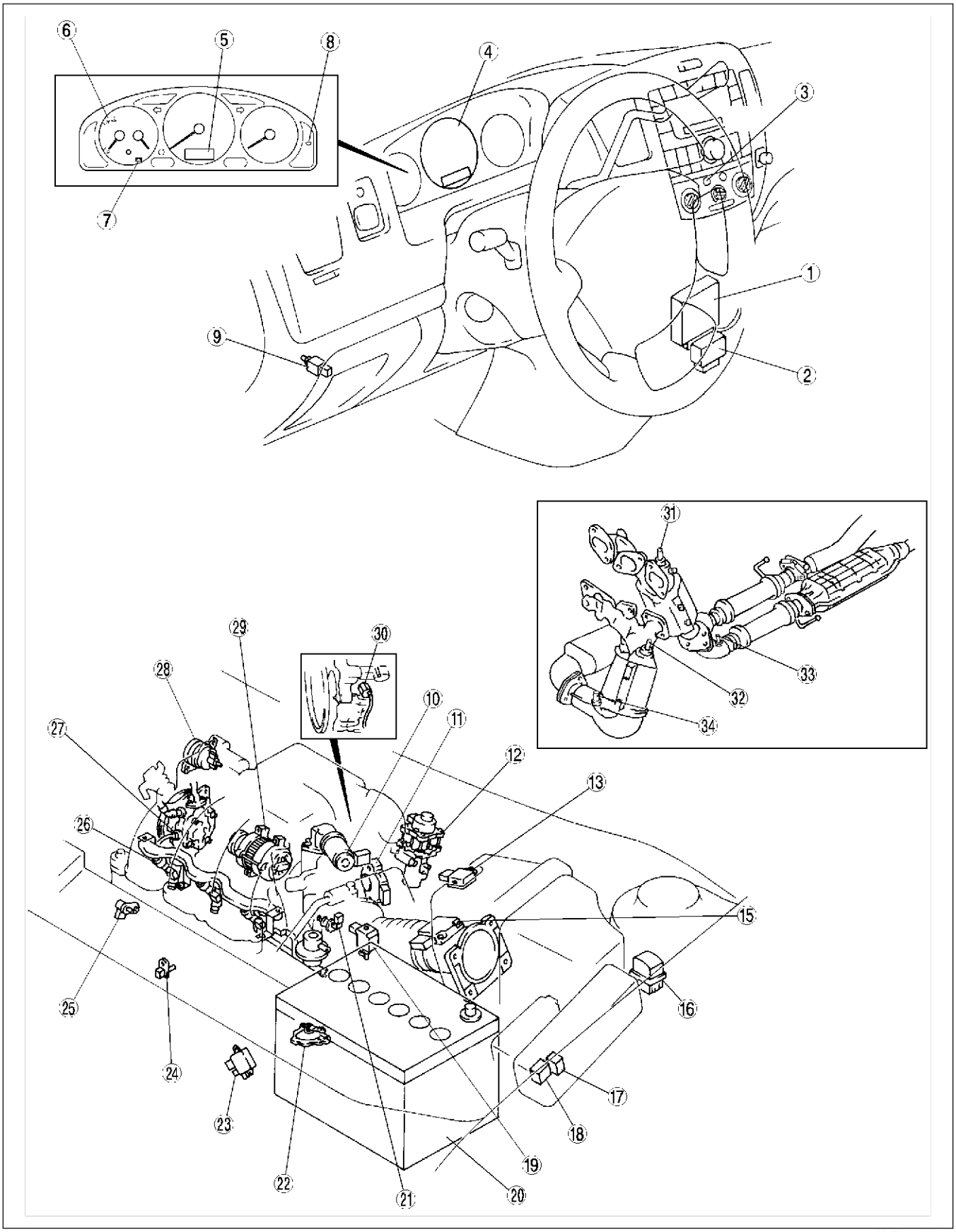

AME4240W001

R.H.D.

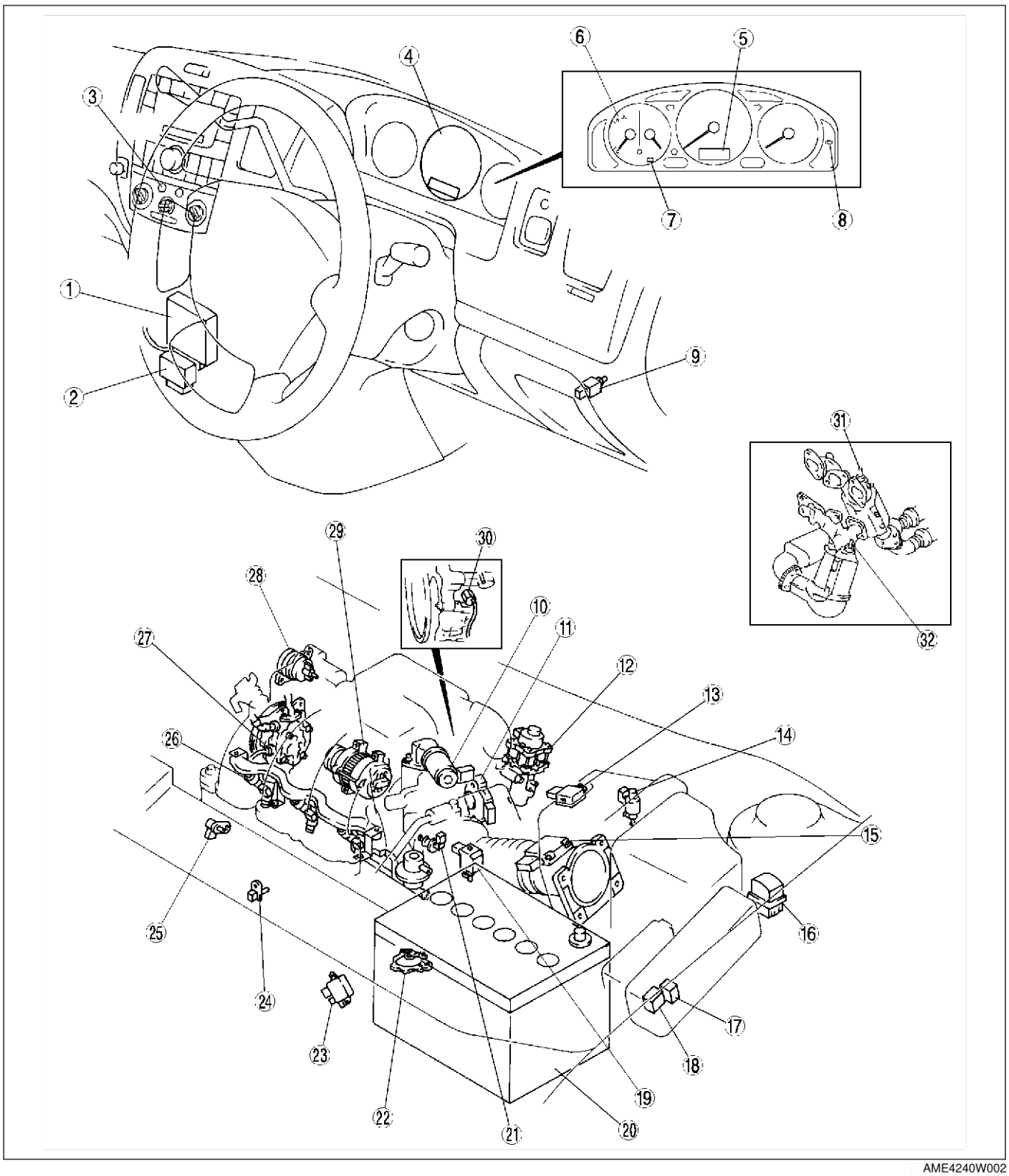
1
2
3
4
5
6
7
8
9
10
11
12
13
14
15
16
17
18
19
20
21
22
23
24
25
26
27
28
29
30
31
32
AME4240W002

1	PCM
2	TCM
3	A/C switch
4	VSS
5	Drive information system display
6	Water temperature gauge
7	Generator warning light
8	MIL
9	Brake switch
10	IAC valve
11	TP sensor
12	EGR valve
13	BARO sensor (European (L.H.D.) specs.)/EGR boost sensor (Australian, General (L.H.D. R.H.D.) specs.)
14	EGR boost sensor solenoid valve (used for Australian, General (L.H.D. R.H.D.) specs.)
15	MAF/IAT sensor
16	DLC
17	Fuel pump relay
18	Main relay
19	Purge solenoid valve
20	Battery
21	ECT sensor
22	TR switch
23	Fan control module
24	CKP sensor
25	CMP sensor
26	Fuel injector
27	PSP switch
28	Intake manifold communication control (IMCC) actuator
29	Generator
30	Knock sensor
31	HO2S (front, RH)
32	HO2S (front, LH)
33	HO2S (rear, RH) (European (L.H.D.) specs.)
34	HO2S (rear, LH) (European (L.H.D.) specs.)

End Of Ste

BLOCK DIAGRAM

AME424018881W03

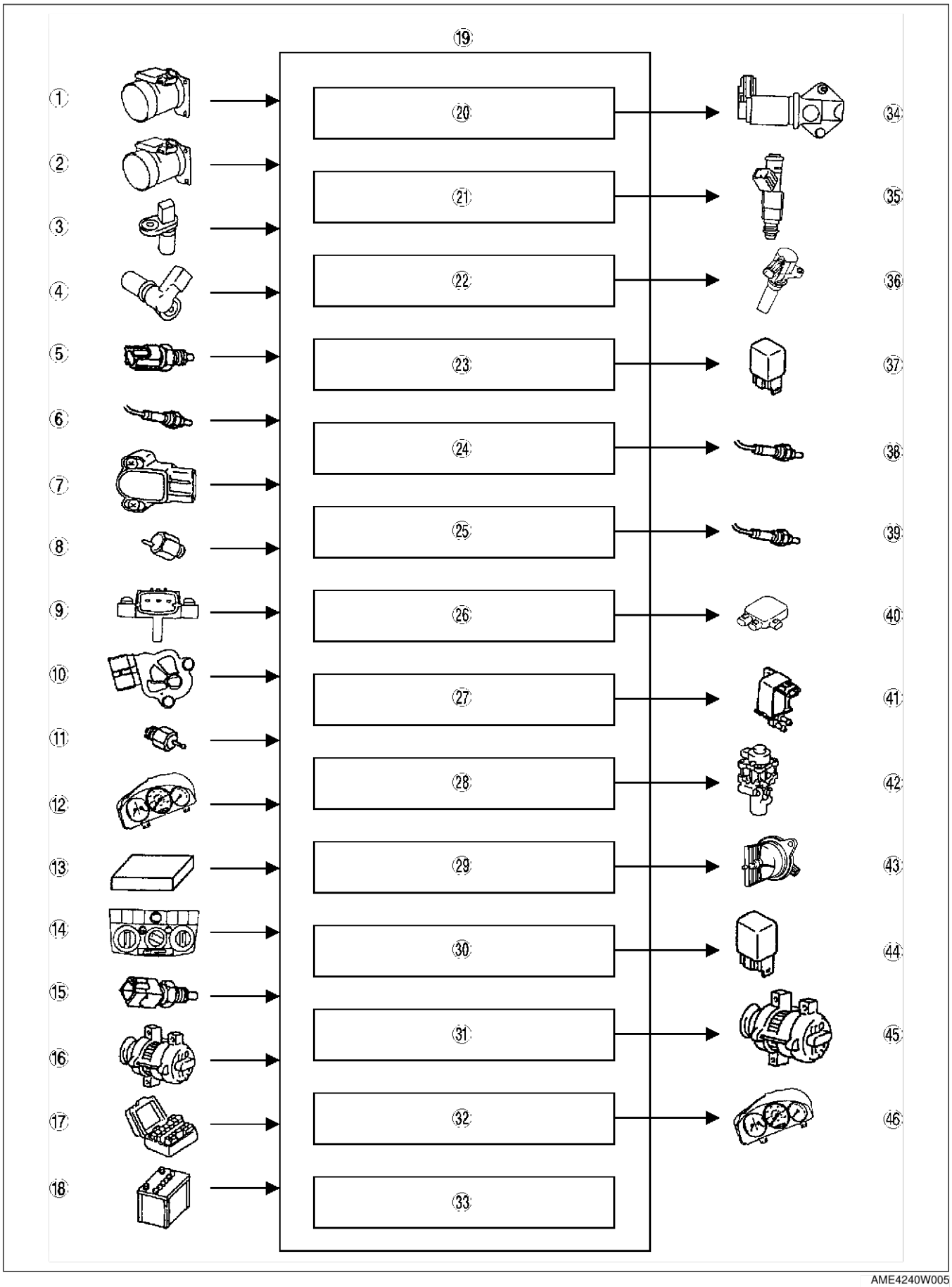

AME4240W005

1	MAF sensor
2	IAT sensor (in MAF sensor)
3	CKP sensor
4	CMP sensor
5	ECT sensor
6	HO2S
7	TP sensor
8	Knock sensor
9	BARO sensor (European (L.H.D.) specs.)/EGR boost sensor (Australian, General (L.H.D. R.H.D.) specs.)
10	TR switch
11	PSP switch
12	VSS
13	Immobilizer unit
14	A/C switch
15	Brake switch
16	Generator (terminal P)
17	DLC (terminal TEN)
18	Battery
19	PCM
20	Idle air control (IAC)
21	Fuel injection control
22	Electronic spark advance (ESA) control
23	Fuel pump control
24	Front HO2S heater control
25	Rear HO2S heater control (European (L.H.D.) specs.)
26	Electrical fan control
27	Purge control
28	EGR control
29	Intake manifold communication control (IMCC)
30	A/C cut-off control
31	Generator control
32	ECT output function
33	Immobilizer system
34	IAC valve
35	Fuel injector
36	Ignition coil
37	Fuel pump relay
38	Front HO2S heater
39	Rear HO2S heater (European (L.H.D.) specs.)
40	Fan control module
41	Purge solenoid valve
42	EGR valve
43	IMCC actuator
44	A/C relay
45	Generator (terminal D)
46	Water temperature gauge

End Of Sta

CONTROL DEVICES AND CONTROL RELATIONSHIP CHART

AME424018881W04

×: Applicable

Component	Idle air control (IAC)	Fuel injection control	tronic spark ance (ESA) control	Fuel pump control	HO2S heater (front) control	HO2S heater (rear) control*	Electrical fan control	Purge control	EGR control	IMCC	A/C cut-off control	Generator control	Immobilizer system
Input													
Brake switch		×											
Refrigerant pressure switch, A/C switch, blower fan switch and A/C amplifier	×	×					×				×		
CKP sensor	×	×	×	×	×			×	×	×		×	
CMP sensor		×	×										
VSS		×	×						×			×	
BARO sensor (European (L.H.D.) specs.)/ EGR boost sensor (Australian, General (L.H.D. R.H.D.) specs.)		×	×					×					
MAF sensor	×	×	×		×			×	×				
ECT sensor	×	×	×		×	×	×	×	×	×	×	×	
IAT sensor	×	×						×	×			×	
TP sensor	×	×	×				×		×	×	×	×	
Front HO2S		×											
Knock sensor			×										
TR switch	×	×	×										
PSP switch	×	×	×								×		
Generator (terminal P: output voltage)	×											×	
DLC in engine compartment (TEN)	×		×				×						
Battery positive voltage		×	×					×				×	
Immobilizer unit		×	×										×
Output													
IAC valve	×												
Fuel injectors		×											×
Ignition coil			×										×
Fuel pump relay				×									
Front HO2S heater					×								
Rear HO2S heater*						×							
Fan control module							×						
Purge solenoid valve								×					
EGR valve									×				
IMCC actuator										×			
A/C relay											×		
Generator (terminal D: field coil)												×	
Generator warning light												×	

* : (European (L.H.D.) specs.)

End Of Sie

IDLE AIR CONTROL

AME424018880W01

Outline

- Compared to the MPV (LW) GY engine model, some corrections for target charging efficiency calculation have been changed. The driving method of the IAC valve, determination and calculation methods of the IAC target air flow are the same as those of the MPV (LW) GY engine models.
- The IAC corrections for the MPV (LW) AJ engine model are as shown in the table.

Operation

Corrections

Correction	Purpose	Condition	Amount of correction
A/C load correction	Prevent drop in engine speed during A/C operation	A/C operation	A/C operation → correction
P/S load correction	Prevent drop in engine speed during P/S operation	P/S operation	P/S operation → correction
Electrical load correction	Prevent drop in engine speed during operation of electrical loads	Idling or driving	Electrical load increases → correction increases
Fuel cut recovery decrease correction	Reduce shock during fuel cut recovery	In deceleration fuel cut zone, decrease by set amount	In deceleration fuel cut zone → correction by set amount
Accelerate warm up correction	Accelerate activation of catalytic converter	Idling when engine speed >1,000 rpm and atmospheric pressure > 72.0 kPa {540 mmHg, 21.3 inHg}, according to ECT	ECT decreases → correction increases
D range correction	Prevent drop in engine speed during shift into D position	Input of D range signal (TR switch)	Difference between engine speed and turbine speed signal decreases → correction increases
Dashpot correction	Prevent drop in engine speed caused by insufficient air during deceleration	Deceleration	Engine speed increases → correction increases
Starting correction	Prevent drop in engine speed during starting	Cranking or just after engine start	ECT decreases → correction increases
Warm restart correction	Prevent drop in engine speed during warm restarting	Cranking when ECT above 60 °C {140 °F}	IAT above 50 °C {122 °F} → increases correction
Closed loop correction A	Make engine speed approach target engine speed	Engine speed while idling (vehicle stopped) deviates from target engine speed (with engine speed above 300 rpm)	Below target engine speed → increase correction Above target engine speed → decreased correction
Closed loop correction B	When engine speed drops, make engine speed approach target engine speed in zone where closed loop correction A cannot compensate	Engine speed below target engine speed during deceleration (with engine speed above 300 rpm) and when closed loop correction A not active	Difference between engine speed and target engine speed increases → correction increases
Learning correction	Store change in air intake amount caused by differences in each engine and secular change and gives closed loop	Idling when ECT above 70 °C {158 °F} and IAT below 75 °C {167 °F} (during closed loop correction A)	During idling → average value of closed loop correction A

Target speed

Load condition	P, N position	Except P, N position
A/C operation	700	700
During electrical load *1	690	690
Power steering operating	750	750

*1 : When headlights, rear defroster, blower fan (level two or higher), cooling fan, and condenser fan are all operated.

End Of Sie

F4

INTAKE MANIFOLD COMMUNICATION CONTROL (IMCC)

AME424018880W02

Outline

- The IMCC concept is same as VICS.

Operation

- The PCM turns the IMCC actuator ON the engine speed is **3,750—5,560 rpm**.

End Of Sta

FUEL INJECTION CONTROL

AME424018880W03

Outline

- Compared to the MPV (LW) GY engine model, NE signal timing and corrections have been changed. The calculation method of the fuel injection timing is the same as that of the MPV (LW) GY engine model.

Fuel Injection Timing

Outline of control

- Compared to the MPV (LW) GY engine model, NE signal timing has been changed.

Timing chart

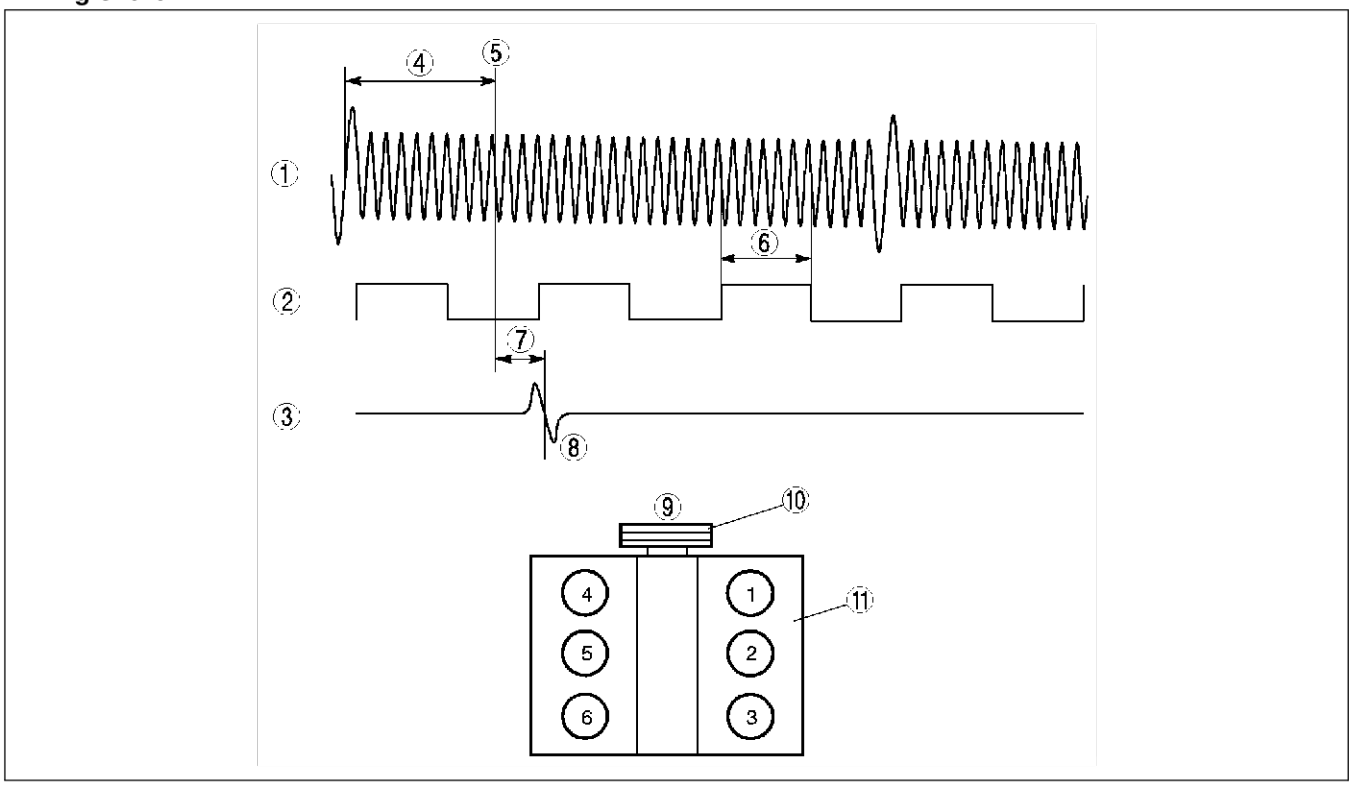

AME4240W010

1	NE signal (CKP sensor)
2	SGT (in PCM)
3	SGC signal (CMP sensor)
4	Missing tooth at 90° BTDC (10°/tooth)
5	TDC
6	60°

7	22.5°
8	1 pulse/720°
9	Cylinder No.
10	Crankshaft pulley
11	Engine

Control Zone
Operation outline
- Compared to the MPV (LW) GY engine model, corrections has been changed.

Closed loop zone
Corrections

Correction	Purpose	Conditions	Action
Fuel injection volume increase correction when start	To maintain engine speed stability when start	Cranking or just after engine start	Lower ECT: Larger correction
Warm-up correction	To maintain combustion stability during warm-up	According to ECT	Lower ECT: Larger correction
Basic heavy load increase correction	To increase engine torque and decrease exhaust gas temperature under heavy load	As required by engine load and engine speed under heavy load	Lower ECT: Larger correction
Basic closed loop correction	To control air/fuel ratio close to stoichiometric	When control is in closed loop zone	—
Learning correction	To deal with change in air/fuel ratio caused by secular change	At all times	—
D range correction	To maintain engine speed stability when shifting to D range	According to ECT at D range shift	Lower ECT: Larger correction
Acceleration/deceleration correction	Corrects change in air-fuel ratio during deceleration or acceleration when engine is cold	According to ECT	Lower ECT: larger correction

End Of Sie

FUEL PUMP CONTROL

AME424018880W04

Outline
- The fuel pump is actuated only when the engine is running for safety and improved durability of the fuel pump.

Operation
- When ignition switch is turned ON, PCM turns the fuel pump relay ON for **1 s**, then OFF.
- While the engine is running (including start), PCM turns the fuel pump relay ON.
- When the engine is stopped, PCM turns the fuel pump relay OFF.

End Of Sie

ELECTRIC SPARK ADVANCE (ESA) CONTROL

AME424018880W05

Outline
- Compared to the MPV (LW) GY engine model, ignition pattern has been changed. The determination of ignition timing, calculation method of ignition coil energization timing, corrections and control zones are the same as those of the MPV (LW) GY engine models.

Operation
- Ignition coil creates secondary ignition energy and distributes it to each spark plug. The ignition coil for each cylinder ignites individually.

End Of Sie

EGR CONTROL

AME424018880W06

Outline
- The EGR control is the same as those of the MPV (LW) GY engine models.

End Of Sie

PURGE CONTROL

AME424018880W07

Outline
- Compared to the MPV (LW) GY engine model, operation condition has been changed. The operation and some corrections for target purge flow calculation are the same as those of the MPV (LW) GY engine models.

Operation
- PCM actuates the purge solenoid valve by duty control when all of the following conditions are met.
  - — Fuel injection control is in the closed loop zone or heavy load increase zone.
  - — Engine coolant temperature is above **60 °C {140 °F}**

End Of Sie

HO2S HEATER CONTROL

AME424018880W08

HO2S (Front) Heater

Outline

- PCM controls HO2S (Front) heaters by duty signal that is calculated based on engine condition.

Block diagram

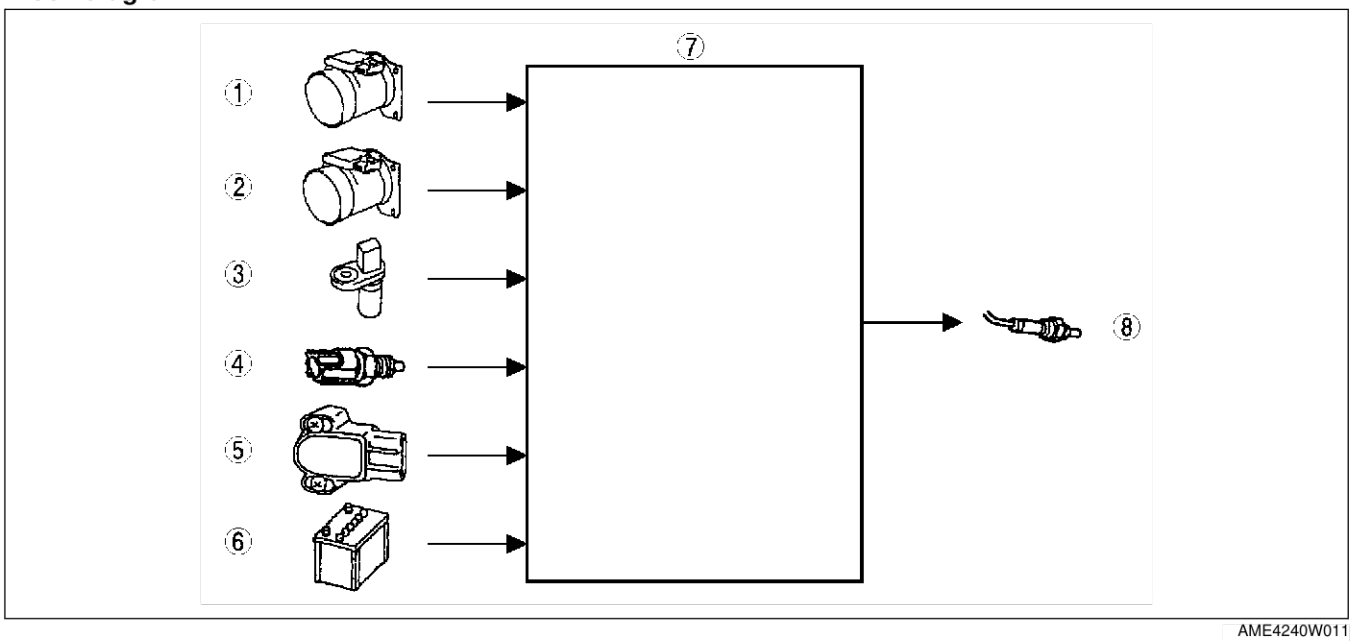

AME4240W011

1	MAF sensor
2	IAT sensor
3	CKP sensor
4	ECT sensor

5	TP sensor
6	Battery
7	PCM
8	HO2S (Front) heater

Operation

- HO2S (front) heater is controlled by the PCM as follows:
  - — PCM runs the heater control with a **0%** duty signal when the following conditions are met.
    - The ignition switch is ON with the engine stopped
    - Engine speed is above **4,000 rpm**
    - Charging efficiency is above **75%**
  - — PCM runs the heater control with a **30%** duty signal when the following conditions are met.
    - When starting
    - Engine speed below **4,000 rpm**
    - Battery voltage above **16 V**
    - Engine coolant temperature or intake air temperature is below **5 °C {41 °F}**
    - ECT sensor, TP sensor or IAT sensor has a malfunction
  - — PCM runs the heater control with a **100%** duty signal when following conditions are met.
    - At idle for a specified period after the engine is started when engine coolant temperature is **0—40 °C {32—104 °F}** and above **70 °C {158 °F}**.

HO2S (Rear) Heater (European (L.H.D.) Specs.)

Outline

- PCM turns HO2S (Rear) heater ON when exhaust gas temperature is low.

Block diagram

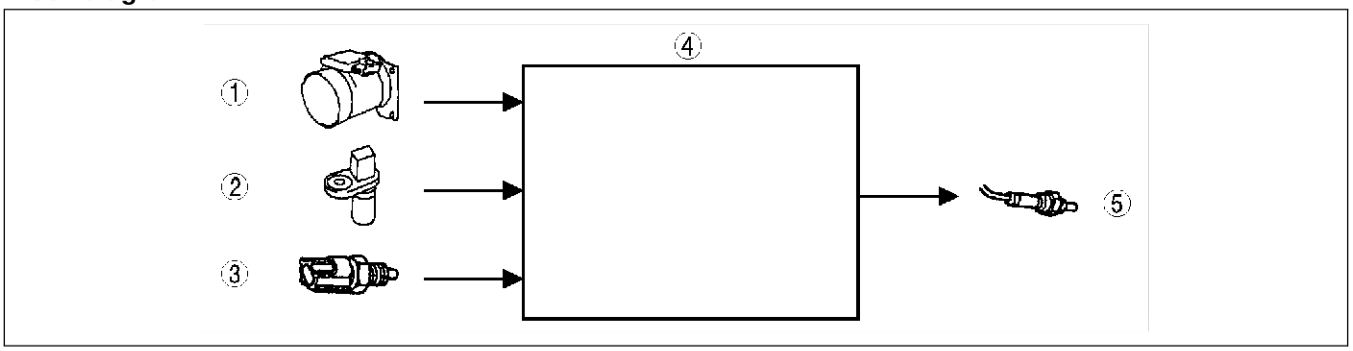

AME4240W012

1	MAF sensor
2	CKP sensor
3	ECT sensor

4	PCM
5	HO2S (rear) heater

Operation

- PCM turns HO2S (Rear) heater ON when for specified period when following conditions are met.
  - — Engine speed below **4,000 rpm**
  - — Charging efficiency below **75%**

End Of Ste

A/C CUT-OFF CONTROL

AME424018880W09

Outline

- Compared to the MPV (LW) GY engine model, operation conditions have been changed.

Operation

A/C cut condition	A/C stop time	Purpose
During cranking	For approx. 4 s	Stability improvement
Vehicle start off	For approx. 3 s	Acceleration performance improvement
Acceleration (throttle valve opening angle above 50%)	For approx. 5 s	
ECT is approx. 113 °C {235 °F}	Alternates between 10 s ON and 10 s OFF until ECT falls below 107 °C {224 °F}	Engine reliability improvement
ECT is above 117 °C {242 °F}	Until ECT falls below 110 °C {230 °F}	
Engine speed below 1,500 rpm and PSP switch ON	For approx. 1 s	Engine stability at idle improvement

End Of Ste

F4

ELECTRICAL FAN CONTROL

AME424018880W10

Outline

- The PCM controls the fan control module via duty value according to vehicle operating conditions for improved engine reliability and idle stability.

Block Diagram

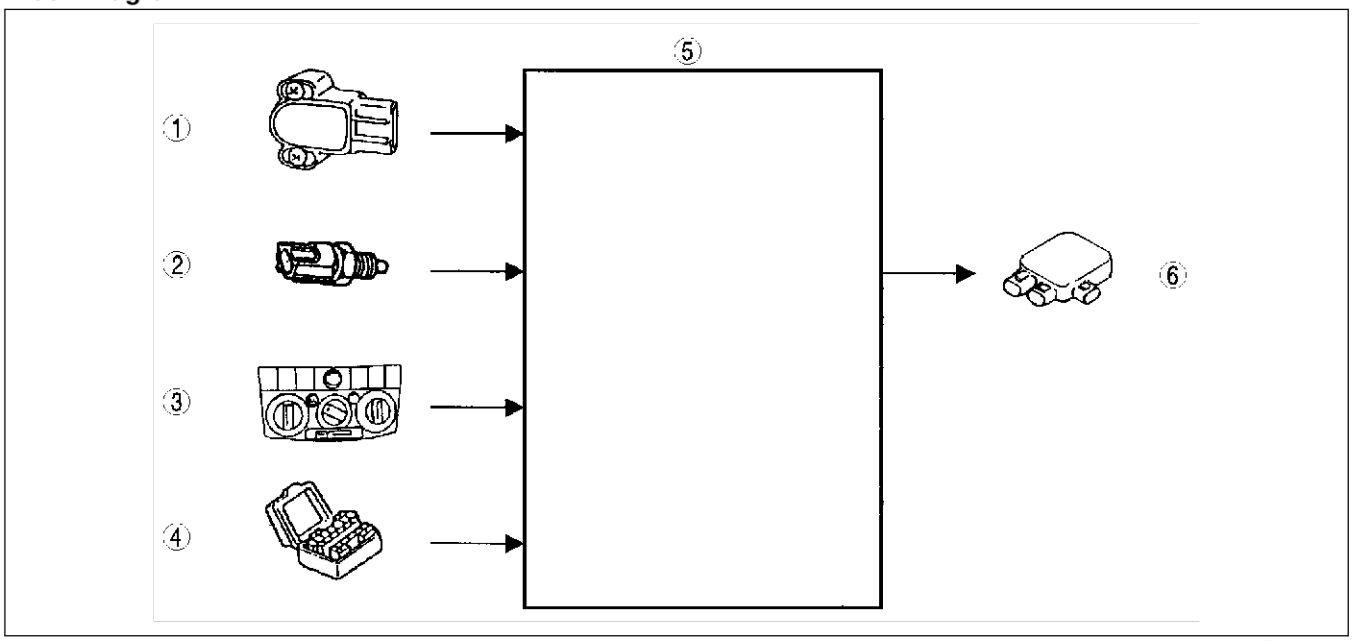

AME4240W013

1	TP sensor
2	ECT sensor
3	A/C switch

4	DLC terminal TEN
5	PCM
6	Fan control module

Operation

Normal condition

- When the engine coolant temperature is below Tw1, the duty ratio outputted from the PCM is 0%, causing the duty ratio outputted from the fan control module to also be 0% and the cooling fan is stopped.
- When the engine coolant temperature goes above Tw1, the duty ratio varies within the LO and HI (A/C off) positions in relation to the engine coolant temperature and the cooling fan operates accordingly.
- When the engine coolant temperature reaches approx. Tw2, the duty ratio is maintained in the HI (A/C is off) position until the engine coolant temperature goes above approx. Tw4.
- When the engine coolant temperature goes above Tw4, the duty ratio is MAX and the cooling fan operates at maximum speed.

A/C is in on condition

European (L.H.D.) specs.

- When the A/C switch is on, the duty ratio is maintained in the HI (A/C is on) position until the engine coolant temperature goes above approx. Tw3.
- When the engine coolant temperature goes above Tw3, the duty ratio varies within the HI (A/C is on) and HI (A/C is off) positions in relation to the engine coolant temperature.
- When the A/C switch and refrigerant pressure switch (middle pressure) are on, regardless of the engine coolant temperature, the duty ratio outputted from the PCM is MAX, and the cooling fan operates at maximum speed.

Australian, General (L.H.D. R.H.D.) specs.

- When the A/C switch is on, regardless of the engine coolant temperature, the duty ratio outputted from the PCM is MAX, and the cooling fan operates at maximum speed.

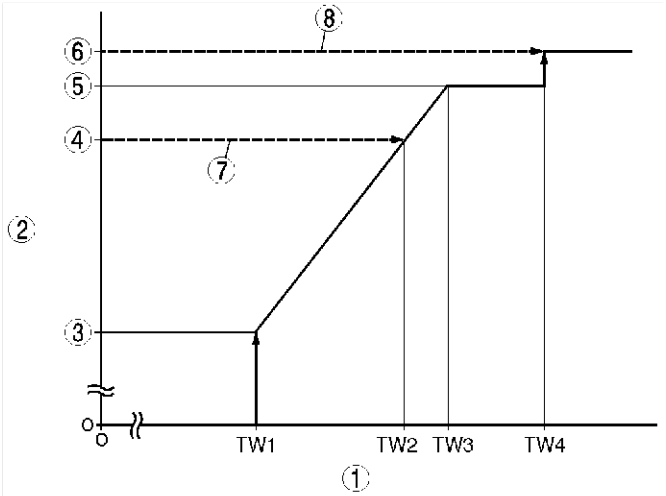

AME4240W014

1	Engine coolant temperature
2	PCM output duty signal
3	Low
4	High (A/C is on)
5	High (A/C is off)

6	MAX
7	A/C is on (refrigerant pressure switch (middle pressure) is OFF)
8	A/C is on (refrigerant pressure switch (middle pressure) is ON)

F4

Battery Voltage Correction

- To prevent variation of cooling fan speed due to battery voltage fluctuation, the PCM adjusts the duty ratio and corrects the battery voltage to maintain the cooling fan at a constant speed and stabilize cooling efficiency.

End Of Sie

GENERATOR CONTROL

AME424018880W11

Outline

- The generator control is the same as those of the MPV (LW) GY engine models.

End Of Sie

PCM FUNCTION DISPLAY

AME424018880W12

Outline

- The driver can verify engine control information according to signals, outlined below, that the PCM sends to the instrument cluster.

Fuel injection amount signal

- The fuel injection amount signal is sent in order to display instantaneous and average fuel economy on the driver information system display.

Engine coolant temperature signal

- The PCM takes the signal from the engine coolant temperature sensor and sends it for display to the water temperature gauge.

MIL control signal

- MIL control signal is the same as those of the MPV (LW) GY engine models.

Generator warning light control signal

- Generator warning light control signal is the same as those of the MPV (LW) GY engine models.

Operation

Fuel injection amount signal

- After sending a standard signal, the PCM calculates the per-hour fuel injection amount (fuel injection time), converts it to a fuel consumption signal pulse, and sends it to the driver information system display. The greater the fuel injection amount (the longer the fuel injection time), the longer the signal remains on.

1	Standard signal
2	Per-hour fuel injection amount signal
3	300—350 ms cycle

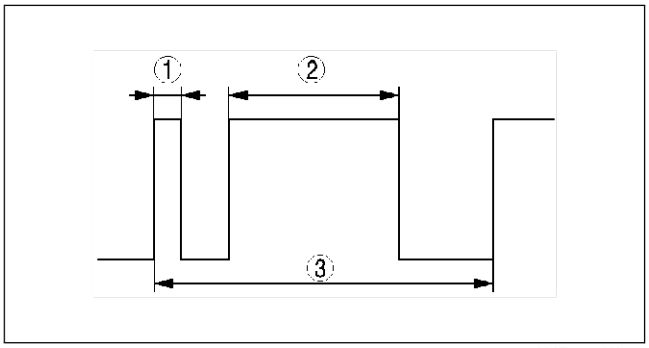

AME4240W067

Engine coolant temperature signal

- Based on the signal from the ECT sensor, the PCM determines the on time of the duty signal and sends it to the instrument cluster. The higher the engine coolant temperature, the longer the signal remains on.

1	Duty value
2	Small
3	Large
4	Engine coolant temperature
5	Low
6	High

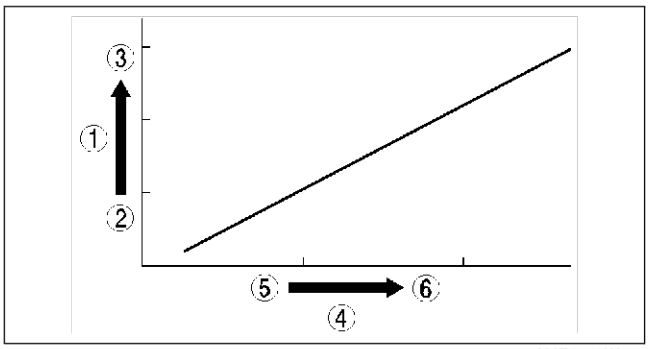

AME4240W066

End Of Sie

CONTROLLER AREA NETWORK (CAN)

AME424018880W13

Outline

- The CAN has been adopted for PCM—TCM communication to simplify the system.

Operation

- PCM communicates with TCM through CAN as shown below.

  Input
  - — Reduce torque signal
  - — Turbine speed signal
  - — ATF temperature signal
  - — Racing select determination
  - — MIL indicate request signal
  - — Range signal
  - — TCC signal

  Output
  - — Engine speed signal
  - — TP signal
  - — Engine torque signal (without torque down)
  - — Engine torque signal (with torque down)
  - — Engine torque signal (torque loss)
  - — Torque reduced signal
  - — Battery reconnection signal
  - — ECT signal

End Of Sie

ON-BOARD DIAGNOSTIC

OUTLINE

AME427018881W01

- The construction and operation of the on-board diagnostic system is essentially carried over from that of the current MPV (LW) OBD models, except for the following. (See MPV Workshop Manual supplement 1700-1*-00H.)
  - — DTCs, PID monitoring items, and simulation items have been added to match the regulations. For the detail information of the regulations, refer to the “OBD Training Manual (3345-1E-00B).”

End Of Sta

CONTROL DEVICES AND MONITORING SYSTEM RELATIONSHIP CHART

AME427018881W02

×: Applicable

Component	Catalyst monitor*1	Misfire monitor*1	Fuel system monitor	Oxygen sensor monitor	Oxygen sensor heater monitor	EGR system monitor*2
Input						
Refrigerant pressure switch, A/C switch, blower fan switch and A/C amplifier						×
PSP switch						×
CKP sensor	×	×	×	×	×	×
CMP sensor	×	×	×	×	×	×
VSS	×	×	×	×		×
MAF sensor	×	×	×	×	×	×
ECT sensor	×	×	×	×	×	×
IAT sensor	×	×	×	×		×
TP sensor	×	×	×	×		×
EGR boost sensor						×
Rear HO2S	×			×	×	
Front HO2S	×		×	×	×	
Output						
DLC-2 in driver compartment (Terminal KLN)	×	×	×	×	×	×
MIL	×	×	×	×	×	×
Purge solenoid valve			×	×		
EGR valve						×
EGR boost sensor solenoid valve						×
Fuel injectors			×			

*1 : European (L.H.D.) specs.
*2 : Australian, General (L.H.D. R.H.D.) specs

End Of Sta

F4

DIAGNOSTIC TEST MODE

AME427018881W03

- To match the OBD regulations for European (L.H.D.) specs., the following diagnostic test modes have been supported.

Diagnostic test mode	Item
Mode 01	Sending diagnostic data (PID data monitor/On-board system readiness test)
Mode 02	Sending freeze frame data
Mode 03	Sending emission-related malfunction code (Diagnostic trouble code: DTC)
Mode 04	Clearing/resetting emission-related malfunction information
Mode 05	Sending oxygen sensor monitor test results
Mode 06	Sending intermittent monitoring system test results (Diagnostic monitoring test result: DMTR)
Mode 07	Sending continuous monitoring system test results (pending code)

- The diagnostic test modes which are characteristic of the MPV (LW) AJ engine model are shown below.

Sending Diagnostic Data (Mode 01)

PID data monitor

- The PID monitoring items are shown in the table.

PID data monitor table

Monitor item	Full names	Condition/unit	
CCNT	Diagnostic trouble code counter	–	
ECT	Engine coolant temperature	°C	°F
FUEL SYS1	Fuel system loop status	Refer to table below.	
FUEL SYS2	Fuel system loop status	Refer to table below.	
IAT	Intake air temperature	°C	°F
LOAD	Engine load calculated value	%	
LONGFT1	Long fuel trim	%	
LONGFT2	Long fuel trim	%	
MAF	Mass air flow	g/s	
MIL	Malfunction indicator	ON/OFF	
MIL DIS	Distance travelled while MI is activated	km	miles
O2S11	Heated oxygen sensor (RF)	V	
O2S12*	Heated oxygen sensor (RR)	V	
O2S21	Heated oxygen sensor (LF)	V	
O2S22*	Heated oxygen sensor (LR)	V	
OBD SUP	OBD support	–	
RPM	Engine speed	rpm	
SHRTFT1	Short fuel trim	%	
SHRTFT2	Short fuel trim	%	
SPARKADV	Spark advance	BTDC	
TP	Throttle position	%	
VSS	Vehicle speed	km/h	mph

* : European (L.H.D.) specs.

Meaning of FUEL SYS1

Display	Meaning
-NA-	Not applicable
OPEN	Feedback stops: Engine coolant temperature is lower than the determined feedback zone.
CLOSE	Feedback operating: HO2S being used for feedback is okay.
OP DRV	Feedback stops: Open loop due to driving condition.
OP SYS	Feedback stops: Open loop due to detected system fault.
CL O2S	Feedback operating: Malfunction occurred in HO2S (rear) system.

On-board system readiness test

- The items supported by the on-board system readiness test are shown below.

Continuous monitoring system

— Misfire monitoring (European (L.H.D.) specs.)
— Fuel system monitoring
— Comprehensive component monitoring (CCM)

Intermittent monitoring system

— Catalyst monitoring (European (L.H.D.) specs.)
— O2S monitoring
— O2S heater monitoring

Sending Freeze Frame Data (FFD) (Mode 02)

- The FFDs are shown in the table.

FFD monitor table

Monitor item	Full names	Condition/unit	
FDMECTS	Engine coolant temperature	°C	°F
FDMIAT	Intake air temperature	°C	°F
FDMTIME	Time recorded between engine start and MIL illumination	min.	
FDMTP	Throttle position	%	
FDPDTC	Diagnostic trouble code (DTC)	–	
FDMECT	Engine coolant temperature	°C	°F
FDMECTS	Engine coolant temperature recorded when the engine is started	°C	°F
FDPFS1	Fuel system loop status (RH)	OPEN: NON-F/B, CLOSE: F/B	
FDPFS2	Fuel system loop status (LH)	OPEN: NON-F/B, CLOSE: F/B	
FDPIAT	Intake air temperature	°C	°F
FDPLFT1	Long fuel trim (RH)	%	
FDPLFT2	Long fuel trim (LH)	%	
FDPLOAD	Engine load calculated value	%	
FDPRPM	Engine speed	rpm	
FDPSFT1	Short fuel trim (RH)	%	
FDPSFT2	Short fuel trim (LH)	%	
FDPTIME	Time recorded between engine start and pending code is stored	min.	
FDMTP	Throttle position	%	
FDPVS	Vehicle speed	km/h	mph

Sending Emission-related Malfunction code (DTC)

- The DTCs are shown in the table.

DTC table

×: Applicable
—: Not applicable

DTC No.	Condition	MIL	DC	Monitor item	Memory function
P0031	HO2S heater (Front, RH) circuit low	ON	2	O_2 sensor heater	×
P0032	HO2S heater (Front, RH) circuit high	ON	2	O_2 sensor heater	×
P0037*2	HO2S heater (Rear, RH) circuit low	ON	2	O_2 sensor heater	×
P0038*2	HO2S heater (Rear, RH) circuit high	ON	2	O_2 sensor heater	×
P0051	HO2S heater (Front, LH) circuit low	ON	2	O_2 sensor heater	×
P0052	HO2S heater (Front, LH) circuit high	ON	2	O_2 sensor heater	×
P0057*2	HO2S heater (Rear, LH) circuit low	ON	2	O_2 sensor heater	×
P0058*2	HO2S heater (Rear, LH) circuit high	ON	2	O_2 sensor heater	×
P0101	MAF sensor inconsistent with TP sensor	ON	2	CCM	×
P0102	MAF circuit low input	ON	1	CCM	×
P0103	MAF circuit high input	ON	1	CCM	×
P0106*3	EGR boost sensor circuit performance problem	ON	2	CCM	×
P0107	BARO sensor/EGR boost sensor circuit low input	ON	1	CCM	×
P0108	BARO sensor/EGR boost sensor circuit high input	ON	1	CCM	×
P0111	IAT circuit performance problem	ON	2	CCM	×
P0112	IAT circuit low input	ON	1	CCM	×

DTC No.	Condition	MIL	DC	Monitor item	Memory function
P0113	IAT circuit high input	ON	1	CCM	×
P0117	ECT circuit low input	ON	1	CCM	×
P0118	ECT circuit high input	ON	1	CCM	×
P0121	Throttle position stuck close	ON	2	CCM	×
P0122	TP circuit low input	ON	1	CCM	×
P0123	TP circuit high input	ON	1	CCM	×
P0125	Excessive time to enter closed loop fuel control	ON	2	CCM	×
P0131	HO2S (Front, RH) no inversion (low stuck)	ON	2	CCM	×
P0132	HO2S (Front, RH) no inversion (high stuck)	ON	2	CCM	×
P0133*2	HO2S (Front, RH) circuit malfunction	ON	2	O_2 sensor	×
P0134	HO2S (Front, RH) circuit no activity detected	ON	2	CCM	×
P0138*2	HO2S (Rear, RH) circuit high input	ON	2	CCM	×
P0140*2	HO2S (Rear, RH) circuit no activity detected	ON	2	CCM	×
P0151	HO2S (Front, LH) no inversion (low stuck)	ON	2	CCM	×
P0152	HO2S (Front, LH) no inversion (high stuck	ON	2	CCM	×
P0153*2	HO2S (Front, LH) circuit malfunction	ON	2	O_2 sensor	×
P0154	HO2S (Front, LH) circuit no activity detected	ON	2	CCM	×
P0158*2	HO2S (Rear, LH) circuit high input	ON	2	CCM	×
P0160*2	HO2S (Rear, LH) circuit no activity detected	ON	2	CCM	×
P0171	Fuel trim system (RH) too lean	ON	2	Fuel	×
P0172	Fuel trim system (RH) too rich	ON	2	Fuel	×
P0174	Fuel trim system (LH) too lean	ON	2	Fuel	×
P0175	Fuel trim system (LH) too rich	ON	2	Fuel	×
P0300*2	Random misfire detected	Flash / ON	1 or 2	Misfire	×
P0301*2	Cylinder No.1 misfire detected	Flash / ON	1 or 2	Misfire	×
P0302*2	Cylinder No.4 misfire detected	Flash / ON	1 or 2	Misfire	×
P0303*2	Cylinder No.2 misfire detected	Flash / ON	1 or 2	Misfire	×
P0304*2	Cylinder No.5 misfire detected	Flash / ON	1 or 2	Misfire	×
P0305*2	Cylinder No.3 misfire detected	Flash / ON	1 or 2	Misfire	×
P0306*2	Cylinder No.6 misfire detected	Flash / ON	1 or 2	Misfire	×
P0327	Knock sensor circuit low input	ON	1	CCM	×
P0328	Knock sensor circuit high input	ON	1	CCM	×
P0335	CKP sensor circuit malfunction	ON	1	CCM	×
P0340	CMP sensor circuit malfunction	ON	1	CCM	×
P0351*3	Ignition coil No.1 circuit malfunction	ON	2	CCM	×
P0352*3	Ignition coil No.4 circuit malfunction	ON	2	CCM	×
P0353*3	Ignition coil No.2 circuit malfunction	ON	2	CCM	×
P0354*3	Ignition coil No.5 circuit malfunction	ON	2	CCM	×
P0355*3	Ignition coil No.3 circuit malfunction	ON	2	CCM	×
P0356*3	Ignition coil No.6 circuit malfunction	ON	2	CCM	×
P0401*3	EGR flow insufficient detected	ON	2	EGR	×
P0402*3	EGR flow excessive detected	ON	2	EGR	×
P0403	EGR valve motor coils open or short	ON	2	CCM	×
P0421*2	Warm-up catalyst system (RH) efficiency below threshold	ON	2	Catalyst	×
P0431*2	Warm-up catalyst system (LH) efficiency below threshold	ON	2	Catalyst	×
P0443	Evaporative emission control system purge control valve circuit malfunction	ON	2	CCM	×
P0480	Fan control module circuit malfunction	OFF	2	CCM	×
P0500	Vehicle speed sensor (VSS) circuit malfunction	ON	2	CCM	×

DTC No.	Condition	MIL	DC	Monitor item	Memory function
P0505	IAC valve circuit malfunction	ON	1	CCM	×
P0506	Idle control system RPM lower than expected	ON	2	CCM	×
P0507	Idle control system RPM higher than expected	ON	2	CCM	×
P0550	PSP switch circuit malfunction	ON	2	CCM	×
P0660	Intake manifold communication control (IMCC) actuator circuit malfunction	OFF	2	CCM	×
P0703	Brake switch input malfunction	ON	2	CCM	×
P1309*2	PCM IC for misfire detection	ON	2	CCM	×
P1562	PCM +BB voltage low	ON	1	CCM	×
P1602*1	Immobilizer unit-PCM communication error	OFF	–	Other	×
P1603*1	Key ID numbers are not registered in PCM	OFF	–	Other	×
P1604*1	Code word is not registered in PCM	OFF	–	Other	×
P1621*1	Code word does not match after engine cranking	OFF	–	Other	×
P1622*1	Key ID number does not match	OFF	–	Other	×
P1623*1	Code word or key ID number read/write error in PCM	OFF	–	Other	×
P1624*1	Immobilizer system communication counter=0	OFF	–	Other	×
P1631	Generator output voltage signal no electricity	OFF	–	Other	×
P1633	Battery overcharge	OFF	–	Other	×
P1634	Generator terminal B circuit open	OFF	–	Other	×
U0073	CAN BUS OFF	OFF	–	Other	×
U0101	PCM cannot receive any signals from TCM	ON	1	CCM	×

*1 : With immobilizer system only
*2 : European (L.H.D.) specs.
*3 : Australian, General (L.H.D. R.H.D.) specs.

Sending Intermittent Monitoring System Test Results (Mode 06)

- The items supported by the sending intermittent monitoring system are shown in the table.

TEST ID	Description	Related system
10:02:11*1	HO2S (Front, RH) lean-to-rich response time	HO2S
10:02:21*1	HO2S (Front, LH) lean-to-rich response time	
10:03:11*1	HO2S (Front, RH) rich-to-lean response time	
10:03:21*1	HO2S (Front, LH) rich-to-lean response time	
10:04:01	HO2S (Front) rich/lean inversion voltage	
10:04:02*1	HO2S (Rear) rich/lean inversion voltage	
10:05:01	HO2S (Front) lean threshold voltage	
10:06:01	HO2S (Front) rich threshold voltage	
10:11:11*1	Front and HO2S (Rear) switching time ratio	TWC
10:11:21*1	Front and HO2S (Rear) switching time ratio	
10:41:00*2	EGR pressure variation	EGR

*1 : European (L.H.D.) specs.
*2 : Australian, General (L.H.D. R.H.D.) specs.

End Of Ste

DTC

AME427018881W04

- Compared to the MPV (LW) GY engine model, some DTCs shown below have been added, or changed for the detection logic or condition.

Oxygen Sensor Heater
HO2S heater (Front, RH) circuit low (P0031)
- The PCM monitors the HO2S heater (Front, RH) control signal at PCM terminal 93. If the PCM turns the HO2S heater (Front, RH) OFF but HO2S heater (Front, RH) circuit has low voltage, the PCM determines that the HO2S heater (Front, RH) circuit has a malfunction.

HO2S heater (Front, RH) circuit high (P0032)
- The PCM monitors the HO2S heater (Front, RH) control signal at PCM terminal 93. If the PCM turns the HO2S heater (front, RH) ON but HO2S heater (front, RH) circuit has high voltage, the PCM determines that the HO2S heater (Front, RH) circuit has a malfunction.

HO2S heater (Rear, RH) circuit low (P0037) (European (L.H.D.) specs.)
- The PCM monitors the HO2S heater (Rear, RH) control signal at PCM terminal 95. If the PCM turns the HO2S heater (Rear, RH) OFF but HO2S heater (Rear, RH) circuit has low voltage, the PCM determines that the HO2S heater (Rear, RH) circuit has a malfunction.

HO2S heater (Rear, RH) circuit high (P0038) (European (L.H.D.) specs.)
- The PCM monitors the HO2S heater (Rear, RH) control signal at PCM terminal 95. If the PCM turns the HO2S heater (Rear, RH) ON but HO2S heater (Rear, RH) circuit has high voltage, the PCM determines that the HO2S heater (Rear, RH) circuit has a malfunction.

HO2S heater (Front, LH) circuit low (P0051)
- The PCM monitors the HO2S heater (Front, LH) control signal at PCM terminal 94. If the PCM turns the HO2S heater (Front, LH) OFF but HO2S heater (Front, LH) circuit has low voltage, the PCM determines that the HO2S heater (Front, LH) circuit has a malfunction.

HO2S heater (Front, LH) circuit high (P0052)
- The PCM monitors the HO2S heater (Front, LH) control signal at PCM terminal 94. If the PCM turns the HO2S heater (front, LH) ON but HO2S heater (front, LH) circuit has high voltage, the PCM determines that the HO2S heater (Front, LH) circuit has malfunction.

HO2S heater (Rear, LH) circuit low (P0057) (European (L.H.D.) specs.)
- The PCM monitors the HO2S heater (Rear, LH) control signal at PCM terminal 96. If the PCM turns the HO2S heater (Rear, LH) OFF but HO2S heater (Rear, LH) circuit has low voltage, the PCM determines that the HO2S heater (Rear, LH) circuit has a malfunction.

HO2S heater (Rear, LH) circuit high (P0058) (European (L.H.D.) specs.)
- The PCM monitors the HO2S heater (Rear, LH) control signal at PCM terminal 96. If the PCM turns the HO2S heater (Rear, LH) ON but rear heater circuit has high voltage, the PCM determines that the HO2S heater (Rear, LH) circuit has a malfunction.

MAF Sensor
MAF sensor inconsistent with TP sensor (P0101)
- PCM compares actual input signal from MAF sensor with expected input signal from MAF sensor which PCM calculates by input voltage from throttle position sensor or engine speed.
  - — If mass intake air flow amount is **below 8.93 g/sec. {1.18 lb/min.}** for **5 s** and throttle opening angle is **above 50%** with engine running, PCM determines that detected mass intake air flow amount is too low.
  - — If mass intake air flow amount is **above 103 g/sec. {13.6 lb/min.}** for **5 s** and engine speed is **below 2,000 rpm** with engine running, PCM determines that detected mass intake air flow amount is too high.

BARO sensor/EGR Boost Sensor
EGR boost sensor circuit performance problem (P0106) (Australian, General (L.H.D. R.H.D.) specs.)
- PCM monitors differences between intake manifold vacuum and atmospheric pressure at idle, which EGR boost sensor detects by switching EGR boost sensor solenoid. If difference is **below 6.43 kPa {48.2 mmHg, 1.90 inHg}**, PCM determines that there is a EGR boost sensor performance problem.

BARO sensor/EGR boost sensor circuit low input (P0107)
- PCM monitors input voltage from BARO sensor/EGR boost sensor when the following conditions are met. If input voltage at PCM terminal 34 is **below 0.2 V**, PCM determines that BARO sensor/EGR boost circuit has a malfunction.
  - — Intake air temperature is **above 10 °C {50 °F}**.
  - — EGR boost sensor solenoid is turned OFF. (Australian, General (L.H.D. R.H.D.) specs.) (Barometric pressure is applied to EGR boost sensor.)

BARO sensor/EGR boost sensor circuit high input (P0108)
- PCM monitors input voltage from BARO sensor/EGR boost sensor when the following conditions are met. If input voltage at PCM terminal 34 is **above 4.8 V**, PCM determines that BARO sensor/EGR boost sensor circuit has a malfunction.
  - — Intake air temperature is **above 10 °C {50 °F}**.
  - — EGR boost sensor solenoid is turned OFF. (Australian, General (L.H.D. R.H.D.) specs.) (Barometric pressure is applied to EGR boost sensor.)

Intake Air Temperature (IAT) Sensor
IAT circuit performance problem (P0111)
- Intake air temperature is higher than engine coolant temperature by **40 °C {104 °F}** and ignition key is ON, PCM determines that there is a IAT sensor performance problem.

Engine Coolant Temperature (ECT) Sensor
ECT circuit low input (P0117)
- The PCM monitors ECT sensor signal at PCM terminal 38. If the PCM detected ECT sensor voltage **below 0.14 V** the PCM determines that the ECT sensor circuit has a malfunction.

ECT circuit high input (P0118)
- The PCM monitors ECT sensor signal at PCM terminal 38. If the PCM detected ECT sensor voltage **above 4.57 V**, the PCM determines that the ECT sensor circuit has a malfunction.

Excessive time to enter closed loop fuel control (P0125)
- The PCM monitor ECT sensor signal at PCM terminal 38 after engine is started at the engine is cold. If ECT voltage does not reach the expected temperature for specified period, PCM determines that it has taken an excessive amount of time for the engine coolant temperature to reach the temperature necessary to start closed-loop fuel control.

F4

Throttle Position (TP) Sensor
Throttle position stuck closed (lower than expected)/open (higher than expected) (P0121)
- If PCM detects that throttle valve opening angle is **below 12.5%** for **5 s** after following conditions are met, PCM determines that TP is stuck closed:
  - — Engine coolant temperature **above 70 °C {158 °F}**
  - — MAF sensor signal **above 88.3 g/s {11.7 lb/minutes}**
- If PCM detects that throttle valve opening angle is **above 50%** for **5 seconds** after the following conditions are met, PCM determines that TP is stuck open:
  - — Engine speed **above 500 rpm**
  - — MAF sensor signal **below 8.93 g/s {1.18 lb/min.}**

TP circuit low input (P0122)
- If PCM detects TP sensor voltage at PCM terminal 89 **below 0.16 V** after ignition key to ON, PCM determines that TP circuit has a malfunction.

TP circuit high input (P0123)
- If PCM detects TP sensor voltage at PCM terminal 89 is **above 4.96 V** after ignition key to ON, PCM determines that TP circuit has a malfunction.

Heated Oxygen Sensor (HO2S) (Front, RH)
HO2S (Front, RH) low stuck (P0131)
- PCM monitors input voltage from HO2S (Front, RH) when the following conditions are met. If input voltage from sensor remains **below 0.45 V** for **33.6 s**, PCM determines that there is no HO2S (Front, RH) inversion.
  - — Engine speed is **above 1,500 rpm**.
  - — Engine coolant temperature is **above 70 °C {158 °F}**.

HO2S (Front, RH) high stuck (P0132)
- PCM monitors input voltage from HO2S (Front, RH) when the following conditions are met. If input voltage from sensor remains **above 0.45 V** for **33.6 s**, PCM determines that there is no HO2S (Front, RH) inversion.
  - — Engine speed is **above 1,500 rpm**.
  - — Engine coolant temperature is **above 70 °C {158 °F}**.

HO2S (Front, RH) circuit malfunction (P0133)
- PCM monitors inversion cycle period, lean-to-rich response time and rich-to-lean response time of the sensor. PCM calculates the average of the inversion cycle period-specified inversion cycles, average response time from lean-to-rich, and from rich-to-lean when the following conditions are met. If any exceeds threshold, PCM determines that circuit has a malfunction.
  - — Calculation load **26.6—57.8%** depends on engine speed.
  - — Engine speed **1,500—2,500 rpm**
  - — Engine coolant temperature is **above -10 °C {14 °F}**.

HO2S (Front, RH) circuit no activity detected (P0134)
- PCM monitors input voltage from HO2S (Front, RH) when the following conditions are met. If input voltage from sensor never **exceeds 0.55 V** for **94 s**, PCM determines that sensor circuit is not activated.
  - — Engine speed is **above 1,500 rpm**.
  - — Engine coolant temperature is **above 70 °C {158 °F}**.

Heated Oxygen Sensor (HO2S) (Front, LH)
HO2S (Front, LH) low stuck (P0151)
- PCM monitors input voltage from HO2S (Front, LH) when the following conditions are met. If input voltage from sensor remains **below 0.45 V** for **33.6 s**, PCM determines that there is no HO2S (Front, LH) inversion.
  - — Engine speed is **above 1,500 rpm**.
  - — Engine coolant temperature is **above 70 °C {158 °F}**.

HO2S (Front, LH) high stuck (P0152)
- PCM monitors input voltage from HO2S (Front, LH) when the following conditions are met. If input voltage from sensor remains **above 0.45 V** for **33.6 s**, PCM determines that there is no HO2S (Front, LH) inversion.
  - — Engine speed is **above 1,500 rpm**.
  - — Engine coolant temperature is **above 70 °C {158 °F}**.

HO2S (Front, LH) circuit malfunction (P0153)
- PCM monitors inversion cycle period, lean-to-rich response time and rich-to-lean response time of the sensor. PCM calculates the average of the inversion cycle period-specified inversion cycles, average response time from lean-to-rich, and from rich-to-lean when the following conditions are met. If any exceeds threshold, PCM determines that circuit has a malfunction.
  - — Calculation load **26.6—57.8%** depends on engine speed.
  - — Engine speed **1,500—2,500 rpm**
  - — Engine coolant temperature is **above -10 °C {14 °F}**.

HO2S (Front, LH) circuit no activity detected (P0154)
- PCM monitors input voltage from HO2S (Front, LH) when the following conditions are met. If input voltage from sensor never **exceed 0.55 V** for **94 s**, PCM determines that sensor circuit is not activated.
  - — Engine speed is **above 1,500 rpm**.
  - — Engine coolant temperature is **above 70 °C {158 °F}**.

Heated Oxygen Sensor (HO2S) (Rear, RH) (European (L.H.D.) specs.)
HO2S (Rear, RH) circuit high input (P0138)
- PCM monitors input voltage from HO2S (Rear, RH). If input voltage from sensor is **above 0.45 V** for **6 s** during deceleration fuel cut, PCM determines that the circuit input is high.

HO2S (Rear, RH) circuit no activity detected (P0140)
- PCM monitors input voltage from HO2S (Rear, RH) when the following conditions are met. If input voltage from sensor never **exceeds 0.55 V** for **30 s**, PCM determines that sensor circuit is not activated.
  - — Engine speed is **above 1,500 rpm**.
  - — Engine coolant temperature is **above 70 °C {158 °F}**.

Heated Oxygen Sensor (HO2S) (Rear, LH) (European (L.H.D.) specs.)
HO2S (Rear, LH) circuit high input (P0158)
- PCM monitors input voltage from HO2S (Rear, LH). If input voltage from sensor is **above 0.45 V** for **6 s** during deceleration fuel cut, PCM determines that the circuit input is high.

HO2S (Rear, LH) circuit no activity detected (P0160)
- PCM monitors input voltage from HO2S (Rear, LH) when the following conditions are met. If input voltage from sensor never **exceeds 0.55 V** for **30 s**, PCM determines that sensor circuit is not activated.
  - — Engine speed is **above 1,500 rpm**.
  - — Engine coolant temperature is **above 70 °C {158 °F}**.

Fuel System
Fuel trim system (RH) too lean (P0171)
- PCM monitors short term fuel trim (SHRTFT1) and long term fuel trim (LONGFT1) values when in closed loop fuel control. If fuel trim exceeds preprogrammed criteria, PCM determines that the fuel system is too lean.

Fuel trim system (LH) too lean (P0174)
- PCM monitors short term fuel trim (SHRTFT2) and long term fuel trim (LONGFT2) values when in closed loop fuel control. If fuel trim exceeds preprogrammed criteria, PCM determines that the fuel system is too lean.

Fuel trim system (RH) too rich (P0172)
- PCM monitors short fuel trim (SHRTFT1) and long fuel trim (LONGFT1) values when in closed loop fuel control. If fuel trim exceeds preprogrammed criteria, PCM determines that the fuel system is too rich.

Fuel trim system (LH) too rich (P0175)
- PCM monitors short fuel trim (SHRTFT2) and long fuel trim (LONGFT2) values when in closed loop fuel control. If fuel trim exceeds preprogrammed criteria, PCM determines that the fuel system is too rich.

Misfire Monitor (European (L.H.D.) specs.)
Random misfire detection (P0300), Cylinder misfire detection (P0301, P0302, P0303, P0304, P0305, P0306)
- PCM monitors CKP sensor input signal interval time. PCM calculates the change of the interval time for each cylinder. If the change of interval time exceeds the preprogrammed criteria, PCM detects a misfire in the corresponding cylinder. While the engine is running, PCM counts the number of misfires that occurred at **200 crankshaft revolutions** and **1,000 crankshaft revolutions** and calculates misfire ratio for each crankshaft revolution. If the ratio exceeds the preprogrammed criteria, PCM determines that a misfire, which can damage the catalytic converter or affect emission performance, has occurred.

Knock Sensor
Knock sensor circuit low input (P0327)
- PCM monitors input signal from knock sensor when engine is running. If input voltage at PCM terminal 57 is excessively low, PCM determines that knock sensor circuit has a malfunction.

Knock sensor circuit high input (P0328)
- PCM monitors input signal from knock sensor when engine is running. If input voltage at PCM terminal 57 is excessively high, PCM determines that knock sensor circuit has a malfunction.

Crankshaft Position (CKP) Sensor
CKP sensor circuit malfunction (P0335)
- If PCM does not receive input voltage from CKP sensor for **4.2 s** while MAF is **2.7 g/s {0.36 lb/min.} or above**, PCM determines that CKP sensor circuit has a malfunction.

Camshaft Position (CMP) Sensor
CMP sensor circuit malfunction (P0340)
- PCM monitors input voltage from CMP sensor when engine is running. If PCM does not receive input voltage from CMP sensor while PCM receives input signal from CKP sensor, PCM determines that CMP circuit has a malfunction.

Ignition Coil (Australian, General (L.H.D. R.H.D.) Specs.)
Ignition coil circuit malfunction (P0351, P0352, P0353, P0354, P0355, P0356)
- PCM monitors output voltage to ignition coil when engine is running. If the voltage is incorrect, PCM determines that ignition coil circuit has a malfunction.

EGR Control (Australian, General (L.H.D. R.H.D.) Specs.)
EGR flow insufficient detected (P0401)
- PCM monitors difference in intake manifold pressures when EGR is operated and when it is stopped. If the difference is too small, PCM determines that EGR flow insufficient.

EGR flow excessive detected (P0402)
- PCM monitors difference in intake manifold pressures when EGR is operated and when it is stopped. If the difference is too large, PCM determines that EGR flow excessive.

EGR Valve (Stepper Motor)
EGR valve (stepper motor) circuit malfunction (P0403)
- The PCM monitors the input voltage from EGR valve control signals. If voltage is below or above specified, PCM determines that the EGR valve circuits have a malfunction.

Warm-up Catalyst System (European (L.H.D.) specs.)
Warm-up catalyst system (RH) efficiency below threshold (P0421)
- PCM compares the number of HO2S (Front, RH) and HO2S (Rear, RH) inversions for a predetermined time. PCM monitors the number of inversions the rear side performs while the front side inverts for a specified number of times when the following monitoring conditions are met. PCM detects the inversion ratio. If inversion ratio is below threshold, PCM determined that catalyst system has deteriorated.
  - — Engine speed **1,340—2,000 rpm**
  - — Calculated load **19.5—44%**(*1)
  - — Vehicle speed **39.5—96.0 km/h {24.5—59.5 mph}**

  *1: Maximum calculated load value varies depends on engine speed.

Warm-up catalyst system (LH) efficiency below threshold (P0431)
- PCM compares the number of HO2S (Front, LH) and HO2S (Rear, LH) inversions for a predetermined time. PCM monitors the number of inversions the rear side performs while the front side inverts for a specified number of times when the following monitoring conditions are met. PCM detects the inversion ratio. If inversion ratio is below threshold, PCM determined that catalyst system has deteriorated.
  - — Engine speed **1,340—2,000 rpm**
  - — Calculated load **19.5—44%**(*1)
  - — Vehicle speed **39.5—96.0 km/h {24.5—59.5 mph}**

  *1: Maximum calculated load value varies depends on engine speed.

Purge Solenoid Valve
Evaporative emission control system purge control valve circuit malfunction (P0443)
- PCM monitors input voltages from purge solenoid valve. If voltage at PCM terminal 18 remains low or high, PCM determines that purge solenoid valve circuit has malfunction.

Fan Control System
Fan control circuit malfunction (P0480)
- PCM monitors input voltages from fan control module. If voltage at PCM terminal 44 remains low or high, PCM determines that fan control circuit has malfunction.

Vehicle Speed Sensor
Vehicle speed sensor (VSS) circuit malfunction (P0500)
- Vehicle speed signal does not input after following conditions are met:
  - — Shift range in except P, N or R range
  - — Load is above **40%**
  - — Engine speed is **2,000 rpm or above**

IAC valve
IAC valve circuit malfunction (P0505)
- The PCM monitors the IAC valve circuit current while IAC duty is **above 18%**. If the PCM detected IAC valve circuit current **below 100 mA (25 °C {77 °F})** or **above 4.5 A (25 °C {77 °F})** for **1 s**, the PCM determines that the IAC valve circuit has malfunction.

Idle Speed Control
Idle control system RPM lower than expected (P0506)
- Actual idle speed is lower than expected by **100 rpm** for **14 s**, when brake pedal is depressed (brake switch is ON) and steering wheel is held straight ahead (power steering pressure switch is OFF).

Idlecontrol system RPM higher than expected (P0507)
- Actual idle speed is higher than expected by **200 rpm** for **14 s**, when brake pedal is depressed (brake switch is ON) and steering wheel is held straight ahead (power steering pressure switch is OFF).

Power Steering Pressure (PSP) switch
PSP switch circuit malfunction (P0550)
- The PCM monitors PSP switch signal at PCM terminal 31. If input voltage is low voltage (switch stays on) for 1 minute when the VSS is **above 60.1 km/h {37.3 mph}** and ECT is **above 60 °C {140 °F}**, the PCM determines that PSP switch circuit has malfunction.

Intake Manifold Communication Control (IMCC)
IMCC circuit malfunction (P0660)
- PCM monitors input voltages from IMCC actuator while engine running. If voltage at PCM terminal 28 remains low or high, PCM determines that IMCC actuator circuit has a malfunction.

Brake switch
Brake switch input malfunction (P0703)
- The PCM monitors changes in input voltage from the brake switch. If PCM does not detect the PCM terminal 92 voltage changes **10 times** while accelerating and deceleration repeatedly, it determines that brake switch circuit has malfunction.

PCM IC for misfire detection (European (L.H.D.) specs.)
PCM IC for misfire detection (P1309)
- When IC which is detecting misfire sends an extraordinary signal to PCM, the PCM determines that IC has malfunction.

Controller Area Network (CAN)
CAN BUS OFF (U0073)
- CAN controller is damaged.

PCM cannot receive any signals from TCM (U0101)
- PCM cannot receive any signals from TCM.

End Of Sie

PID/DATA MONITOR AND RECORD

AME427018881W05

- The PID/DATA monitoring items for the fuel and emission control systems are as shown in the table below.

Monitor item table

—: Not applicable

PID item	Definition	Unit/Condition	PCM terminal
ACCS	A/C relay	ON/OFF	69
ACSW	A/C on-demand circuit, including refrigerant pressure switch, A/C amplifier, A/C switch and fan switch	ON/OFF	41
ALTF	Generator field coil control duty valve in PCM	%	53
ALTT V	Generator output voltage	V	30
ARPMDES	Target engine speed	rpm	—
BARO	Barometric pressure	kPa or Hg	—
	Barometric pressure signal voltage	V	34
BOO	Brake switch	ON/OFF	92
CHRGLP	Generator warning light control signal in PCM	ON/OFF	98
ECT	Engine coolant temperature	°C or °F	—
	Engine coolant temperature voltage	V	38
EGRCHK	EGR boost sensor solenoid valve control signal in PCM	ON/OFF	47
EVAPCP	Purge solenoid valve duty value in PCM	%	18
FAN DUTY	Fan control signal in PCM	%	44
FDMECTS*1	Engine coolant temperature recorded when the engine is started	MIN	38
FDMIAT*1	Intake air temperature	°C or °F	39
FDMTIME*1	Time recorded between engine start and MIL illumination	°C or °F	—
FDMTP*1	Throttle opening angle when pending code is stored	%	89
FDPDTC*2	Pending code	—	—
FDPECT*2	ECT	°C or °F	38
FDPECTS*2	Engine coolant temperature recorded when the engine is started	°C or °F	38
FDPFS1*2	Fuel system feedback control status (RH)	—	—
FDPFS2*2	Fuel system feedback control status (LH)	—	—
FDPIAT*2	Intake air temperature	°C or °F	39
FDPLFT1*2	Current bank 1 fuel trim adjustment	%	—
FDPLFT2*2	Current bank 2 fuel trim adjustment	%	—
FDPLOAD*2	Calculated engine load	%	—
FDPRPM*2	Engine speed	RPM	21, 22
FDPSFT1*2	Current bank 1 fuel trim adjustment (learning correction value)	%	—
FDPSFT2*2	Current bank 2 fuel trim adjustment (learning correction value)	%	—
FDPTIME*2	Time recorded between engine start and pending code is stored	MIN	—
FDPTP*2	Throttle opening angle	%	89
FDPVS*2	Vehicle speed	KPH or MPH	58
FP	Fuel pump relay control signal in PCM	ON/OFF	80*3, 104*4
FUELPW1	Fuel injection duration (RH) in PCM	MS	74, 75, 101
FUELPW2	Fuel injection duration (LH) in PCM	MS	73, 99, 100
HTR11	HO2S heater (Front RH) control signal in PCM	ON/OFF	93
HTR12	HO2S heater (Rear RH) control signal in PCM	ON/OFF	95
HTR21	HO2S heater (Front LH) control signal in PCM	ON/OFF	94
HTR22	HO2S heater (Rear LH) control signal in PCM	ON/OFF	96
IAC	IAC valve duty value in PCM	%	54, 83
IAT	IAT	°C or °F	—
	IAT signal voltage	V	39
IMCC	Intake manifold communication control (IMCC) actuator control signal in PCM	%	28
KNOCKR	Spark retard value to prevent knocking	DEG	4, 57
LOAD	Calculated engine load in PCM	%	—

PID item	Definition	Unit/Condition	PCM terminal
LONGFT1	Current long fuel trim (RH) adjustment (Learning correction value) in PCM	%	—
LONGFT2	Current long fuel trim (LH) adjustment (Learning correction value) in PCM	%	—
MAF	Mass air flow amount	g/s	—
	MAF signal voltage	V	88
MIL	Malfunction indicator light control signal in PCM	ON/OFF	2
O2S11	HO2S (Front RH) signal voltage	V	60
O2S12*5	HO2S (Rear RH) signal voltage	V	35
O2S21	HO2S (Front LH) signal voltage	V	87
O2S22*5	HO2S (Rear LH) signal voltage	V	61
PNP	TR switch (P and N position switches)	ON/OFF	64
PSP	PSP switch	ON/OFF	31
RFCFLAG	Adaptive memory condition	ON/OFF	—
RPM	Engine speed	rpm	21, 22
SEGRP	EGR valve (stepping motor) position in PCM	No. of step	12, 46, 56, 72
SHRTFT1	Current short fuel trim (RH) adjustment in PCM	%	—
SHRTFT2	Current short fuel trim (LH) adjustment in PCM	%	—
SPARKADV	Ignition timing control signal in PCM	BTC	26 for #1, 1 for #2 52 for #3, 27 for #4 78 for #5, 82 for #6
TEST	TEN terminal (DLC in engine compartment)	ON/OFF	5
TP	TP sensor signal voltage	V	89
TSS	Turbine speed	rpm	—
VPWR	Battery positive voltage	V	55
VSS	Vehicle speed	KPH or MPH	58

*1 : Freeze frame data while MIL is illuminated
*2 : Freeze frame data while pending code is detected
*3 : Without immobilizer system
*4 : With immobilizer system
*5 : European (L.H.D.) specs.

End Of Sie

SIMULATION TEST

AME427018881W06

- The simulation test items for the fuel and emission control systems are as shown in the table below.

Simulation item table

×: Applied
—: Not applied

Simulation item	Applicable component	Operation	Test condition		PCM terminal
			IG ON	Idle	
ACCS	A/C relay	ON or OFF	×	×	69
ALTF	Generator field coil control duty value	OFF	—	×	53
CHRGLP	Generator warning light	ON or OFF	×	×	98
EGRCHK*3	EGR boost sensor solenoid valve	ON or OFF	×	×	47
EVAPCP	Purge solenoid valve	For purge solenoid valve: Actuated by any duty value (0—100%)	×	×	18
FAN DUTY	Fan control module	Actuated by any duty value(0—100%)	×	×	44
FP	Fuel pump relay	ON or OFF	×	×	80*2, 104*1
FUELPW1	Fuel injection duration	Actuated +50%— -50% fuel injection time	—	×	73, 74, 75, 99, 100, 101
IAC	Idle air control valve	Actuated by any duty value(0—100%)	×	×	54, 83
INJ#1	Fuel injector (Cylinder No.1)	OFF	—	×	75
INJ#2	Fuel injector (Cylinder No.2)	OFF	—	×	101
INJ#3	Fuel injector (Cylinder No.3)	OFF	—	×	74
INJ#4	Fuel injector (Cylinder No.4)	OFF	—	×	100
INJ#5	Fuel injector (Cylinder No.5)	OFF	—	×	73
INJ#6	Fuel injector (Cylinder No.6)	OFF	—	×	99
IVC	IMCC actuator	ON or OFF	×	×	28
SEGRP	EGR valve (stepping motor)	Actuated by any stepping value (0—60 steps)	×	×	12, 46, 56, 72

*1 : With immobilizer system
*2 : Without immobilizer system
*3 : Australian, General (L.H.D. R.H.D.) specs

End Of Ste

LOCATION INDEX

INTAKE-AIR SYSTEM

AME420013000W01

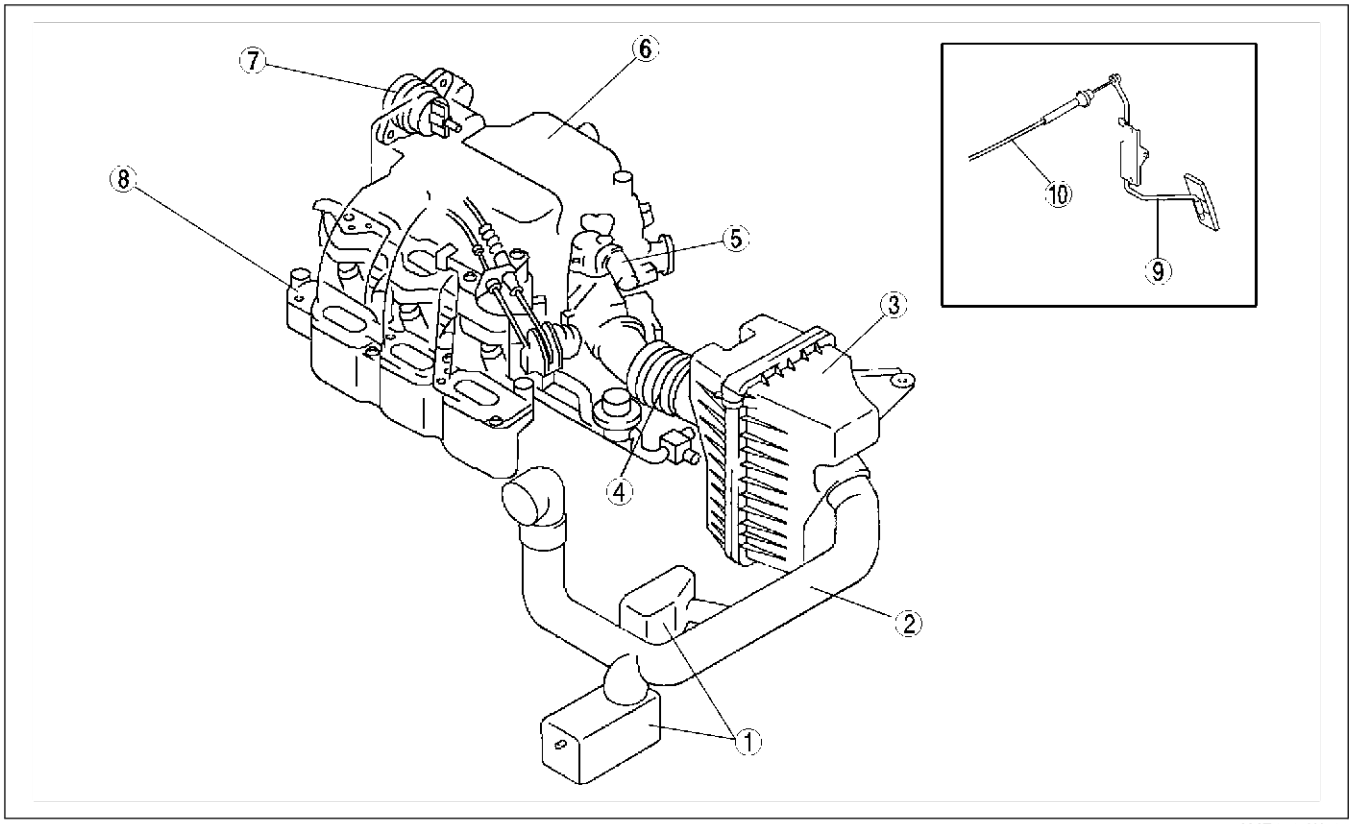

AME4210W012

1	Resonance chamber (See F4–60 INTAKE-AIR SYSTEM REMOVAL/ INSTALLATION)
2	Fresh-air duct (See F4–60 INTAKE-AIR SYSTEM REMOVAL/ INSTALLATION)
3	Air cleaner (See F4–60 INTAKE-AIR SYSTEM REMOVAL/ INSTALLATION)
4	Air hose (See F4–60 INTAKE-AIR SYSTEM REMOVAL/ INSTALLATION)
5	IAC valve (See F4–62 IDLE AIR CONTROL (IAC) VALVE INSPECTION)
6	Dynamic chamber (See F4–60 INTAKE-AIR SYSTEM REMOVAL/ INSTALLATION)
7	IMCC actuator (See F4–63 INTAKE MANIFOLD COMMUNICATION CONTROL (IMCC) ACTUATOR INSPECTION)
8	Intake manifold (See F4–60 INTAKE-AIR SYSTEM REMOVAL/ INSTALLATION)
9	Accelerator pedal (See F4–64 ACCELERATOR PEDAL REMOVAL/ INSTALLATION)
10	Accelerator cable (See F4–64 ACCELERATOR CABLE INSPECTION) (See F4–64 ACCELERATOR CABLE ADJUSTMENT)

End Of Sta

FUEL SYSTEM

AME420001006W01

Engine Room Side

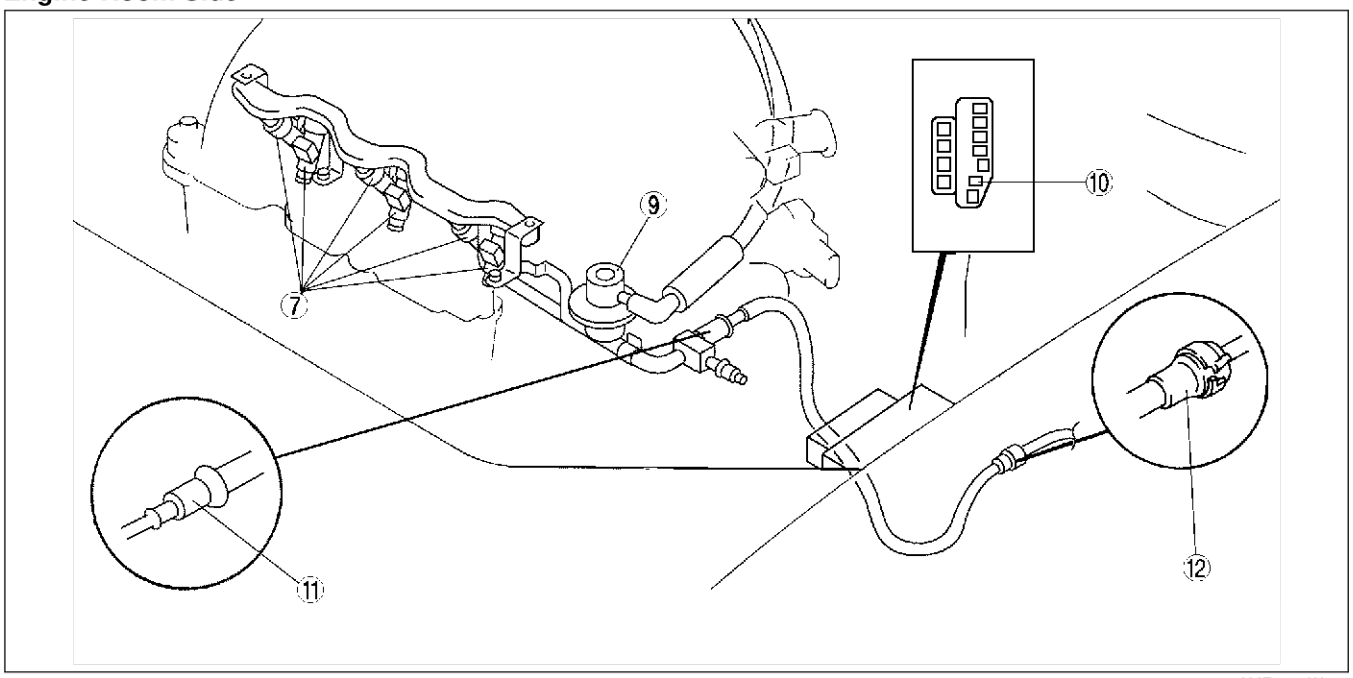

AME4212W016

Fuel Tank Side

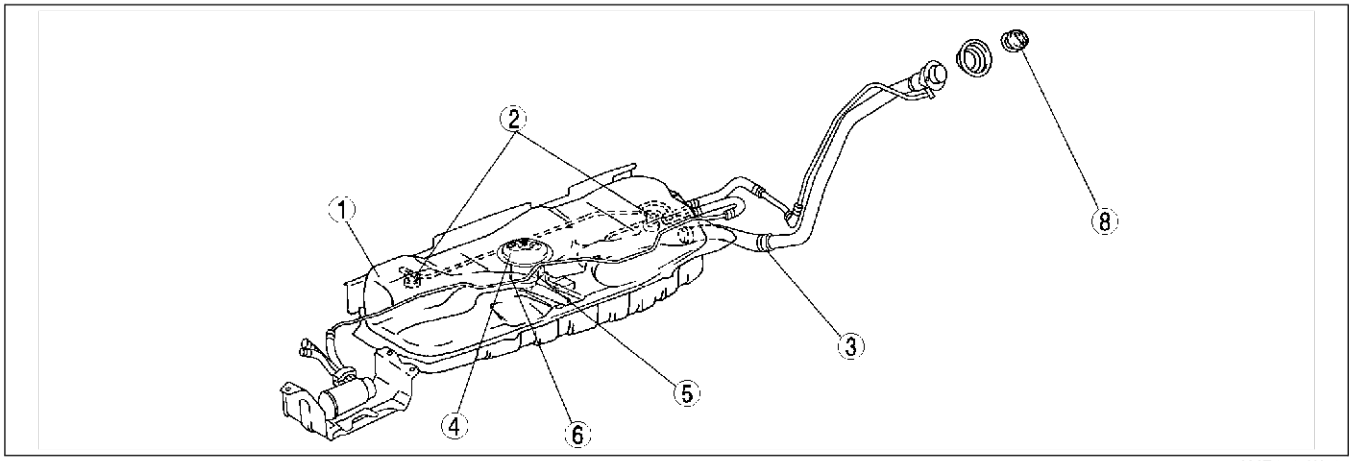

AME4212W017

1	Fuel tank (See F4–68 FUEL TANK REMOVAL/INSTALLATION) (See F4–70 FUEL TANK INSPECTION)
2	Rollover valve (See F4–70 FUEL TANK INSPECTION)
3	Nonreturn valve (See F4–70 NONRETURN VALVE INSPECTION)
4	Fuel pump unit (See F4–71 FUEL PUMP UNIT REMOVAL/INSTALLATION) (See F4–73 FUEL PUMP UNIT DISASSEMBLY/ASSEMBLY) (See F4–74 FUEL PUMP UNIT INSPECTION)
5	Fuel filter (high-pressure) (See F4–74 FUEL FILTER (HIGH-PRESSURE) REMOVAL/INSTALLATION)

6	Pressure regulator (See F4–80 PRESSURE REGULATOR INSPECTION)
7	Fuel injector (See F4–75 FUEL INJECTOR REMOVAL/INSTALLATION) (See F4–78 FUEL INJECTOR INSPECTION)
8	Fuel-filler cap
9	Pulsation damper (See F4–80 PULSATION DAMPER REMOVAL/INSTALLATION) (See F4–80 PULSATION DAMPER INSPECTION)
10	Fuel pump relay (See T–28 RELAY INSPECTION)
11	Quick release connector (fuel distributor side)
12	Quick release connector (engine room side)

EMISSION SYSTEM

Engine Room Side

AME420001074W01

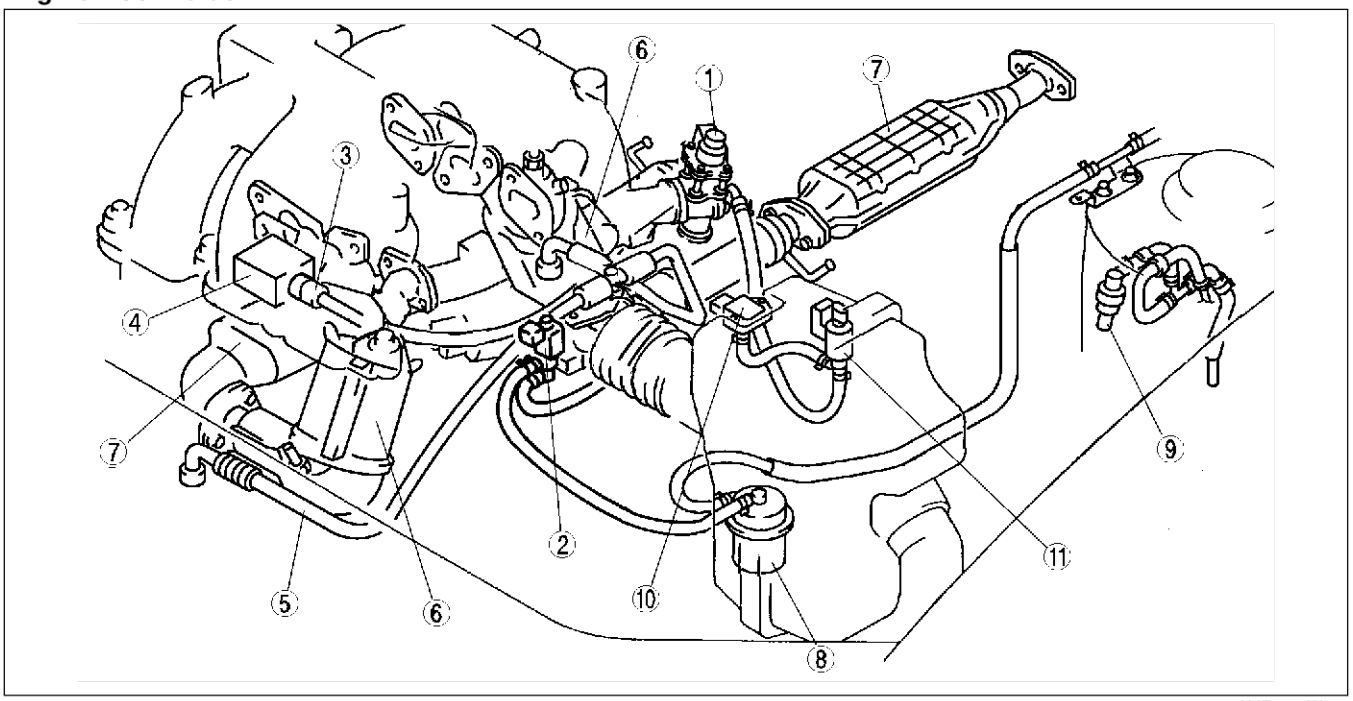

AME4216W001

Fuel Tank Side

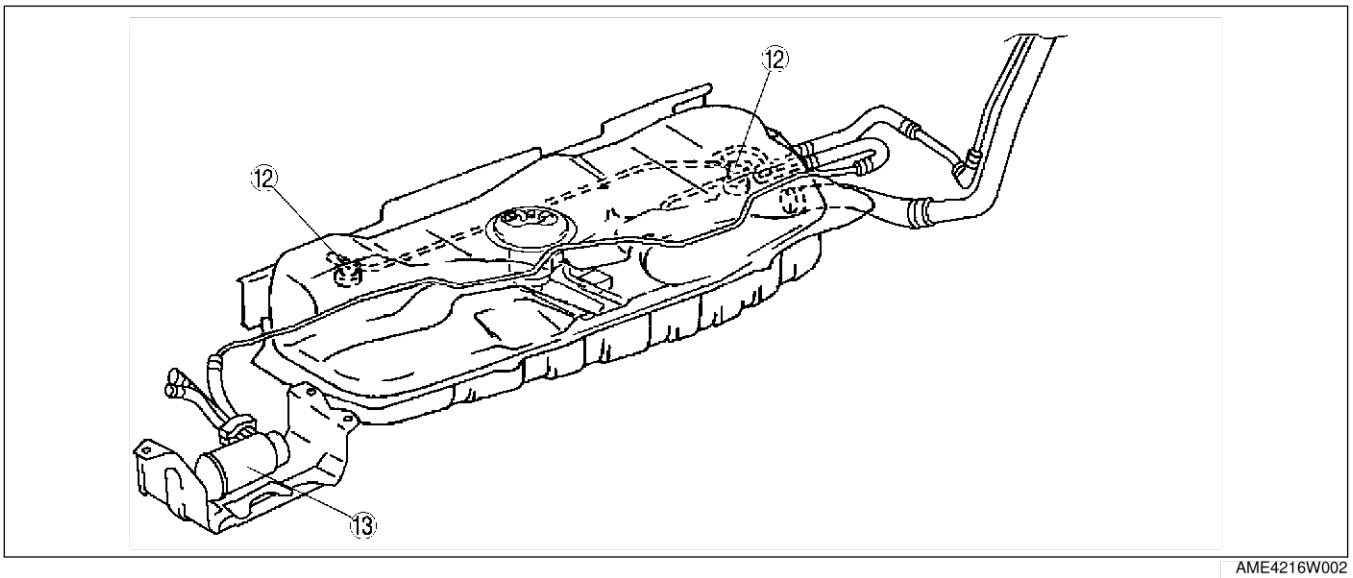

AME4216W002

1	EGR valve (See F4–86 EGR VALVE INSPECTION)
2	Purge solenoid valve (See F4–84 PURGE SOLENOID VALVE REMOVAL/INSTALLATION) (See F4–85 PURGE SOLENOID VALVE INSPECTION)
3	PCV valve (See F4–87 PCV VALVE INSPECTION)
4	Oil separator
5	Ventilation hose
6	WU-TWC (Except Genaral (L.H.D.) specs) (See F4–88 WARM-UP THREE-WAY CATALYTIC CONVERTER (WU-TWC) INSPECTION (EUROPEAN (L.H.D.) SPECS))
7	TWC

8	Catch tank (See F4–84 CATCH TANK INSPECTION)
9	Evaporative gas check valve (one-way) (See F4–84 EVAPORATIVE GAS CHECK VALVE (ONE-WAY) INSPECTION)
10	EGR boost sensor (See F4–104 BAROMETRIC PRESSURE SENSOR/EGR BOOST SENSOR INSPECTION)
11	EGR boost sensor solenoid valve (See F4–87 EGR BOOST SENSOR SOLENOID VALVE INSPECTION)
12	Rollover valve (See F4–70 FUEL TANK INSPECTION)
13	Charcoal canister (See F4–83 CHARCOAL CANISTER INSPECTION)

CONTROL SYSTEM

AME420018881W01

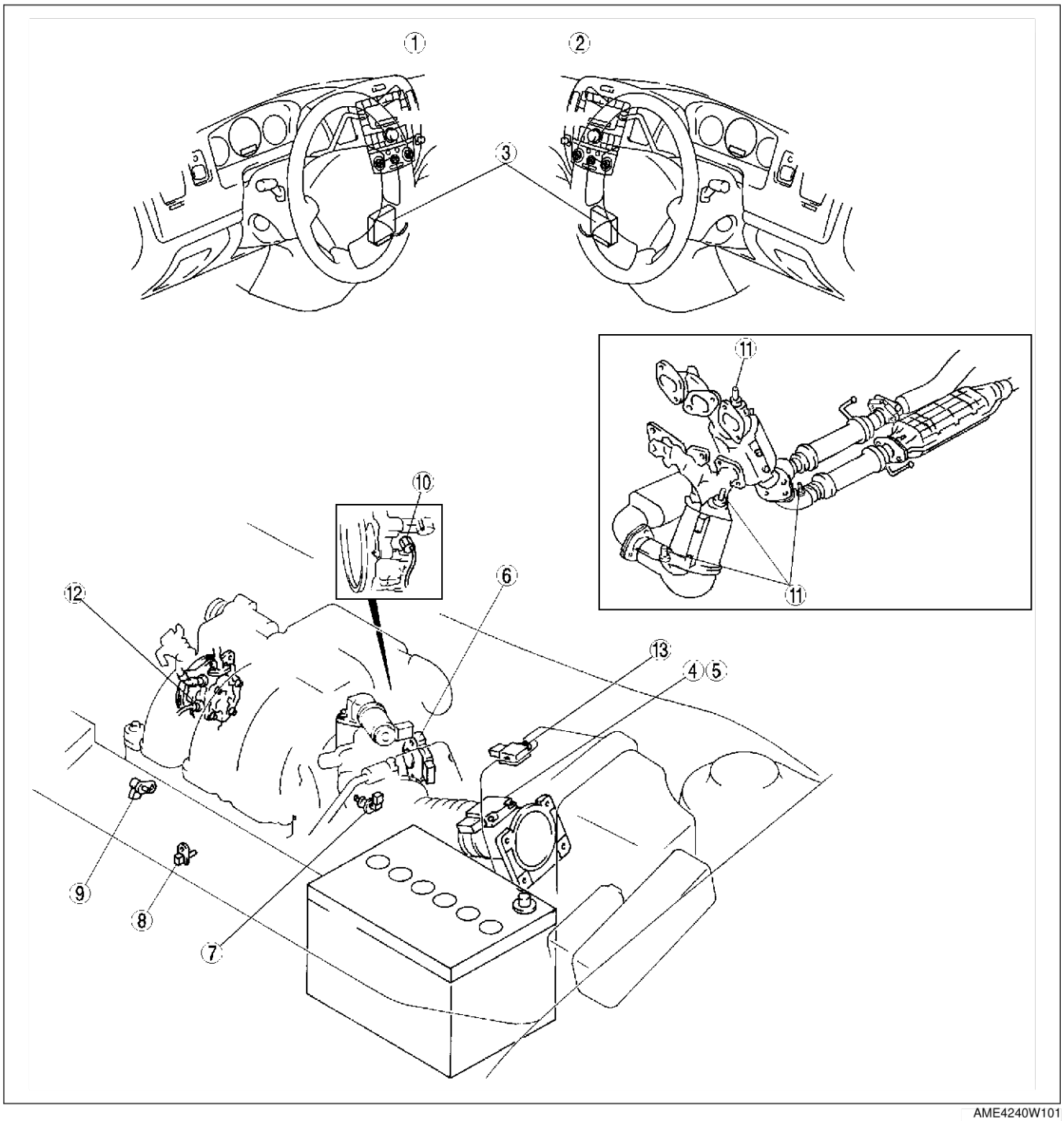

AME4240W101

1	L.H.D.
2	R.H.D.
3	PCM (See F4–90 PCM REMOVAL/INSTALLATION) (See F4–91 PCM INSPECTION)
4	MAF sensor (See F4–96 MASS AIR FLOW (MAF)/INTAKE AIR TEMPERATURE (IAT) SENSOR INSPECTION)
5	IAT sensor (See F4–96 MASS AIR FLOW (MAF)/INTAKE AIR TEMPERATURE (IAT) SENSOR INSPECTION)
6	TP sensor (See F4–99 THROTTLE POSITION (TP) SENSOR INSPECTION) (See F4–99 THROTTLE POSITION (TP) SENSOR REMOVAL/INSTALLATION)
7	ECT sensor (See F4–100 ENGINE COOLANT TEMPERATURE (ECT) SENSOR INSPECTION) (See F4–101 ENGINE COOLANT TEMPERATURE (ECT) SENSOR REMOVAL/INSTALLATION)
8	CKP sensor (See F4–101 CRANKSHAFT POSITION (CKP) SENSOR INSPECTION) (See F4–102 CRANKSHAFT POSITION SENSOR REMOVAL/INSTALLATION)
9	CMP sensor (See F4–102 CAMSHAFT POSITION (CMP) SENSOR INSPECTION) (See F4–103 CAMSHAFT POSITION SENSOR REMOVAL/INSTALLATION)
10	Knock sensor (See F4–103 KNOCK SENSOR INSPECTION)
11	HO2S (See F4–105 HEATED OXYGEN SENSOR (HO2S) INSPECTION)
12	PSP switch (See F4–107 POWER STEERING PRESSURE (PSP) SWITCH INSPECTION)
13	BARO sensor (European (L.H.D.) specs.)/EGR boost sensor (Australian, General (L.H.D. R.H.D.) specs.) (See F4–104 BAROMETRIC PRESSURE SENSOR/EGR BOOST SENSOR INSPECTION)

End Of Sie

ENGINE TUNE-UP

IGNITION TIMING INSPECTION

AME420802000W01

Note
- Ignition timing is not adjustable.
- Ignition timing verification requires WDS or equivalent.

1. Turn off the electrical loads.
2. Warm up the engine as follows.
   (1) Start the engine.
   (2) Maintain the engine speed at approx. 3,000 rpm until the cooling fans start to operate.
   (3) Release the accelerator pedal.
   (4) Wait until the cooling fans stop.
3. Verify that the ignition timing (WDS: SPARKADV PID) is within the specification using WDS or equivalent.

Ignition timing
Approx. BTDC 10 degree

4. Verify that ingestion timing advances when the engine speed increases gradually.

End Of Ste

IDLE SPEED INSPECTION

AME420802000W02

Note
- Idle speed is not adjustable.
- Idle speed verification requires WDS or equivalent.

1. Turn off the electrical loads.
2. Warm up the engine as follows.
   (1) Start the engine.
   (2) Maintain the engine speed at approx. 3,000 rpm until the cooling fans start to operate.
   (3) Release the accelerator pedal.
   (4) Wait until the cooling fans stop.
3. Verify that the idle speed (WDS: RPM PID) is within the specification using WDS or equivalent.

Idle speed

Condition	Engine speed (rpm)*1
No load	635—735
Electrical loads*2 ON	635—735
P/S ON	700—800
A/C ON and refrigerant pressure switch (middle) OFF	650—750
A/C ON and refrigerant pressure switch (middle) ON	650—750

*1 : Excludes temporary idle speed drop just after the electrical loads are turned on.
*2 : Blower motor is operating at high speed. Headlight switch is turned on. Rear window defroster switch is turned on. Cooling fans are operating.

End Of Ste

IDLE MIXTURE INSPECTION

AME420802000W03

1. Turn off the electrical loads.
2. Warm up the engine as follows.
   (1) Start the engine.
   (2) Maintain the engine speed at approx. 3,000 rpm until the cooling fans start to operate.
   (3) Release the accelerator pedal.
   (4) Wait until the cooling fans stop.
3. Verify that the idle speed and ignition timing are within the specification. (See F4–58 IDLE SPEED INSPECTION.) (See F4–58 IGNITION TIMING INSPECTION.)
4. Insert an exhaust gas analyzer to the tailpipe.
5. Verify that the CO and HC concentrations are within the regulation.

End Of Ste

INTAKE-AIR SYSTEM

VACUUM HOSE ROUTING DIAGRAM

AME421020030W01

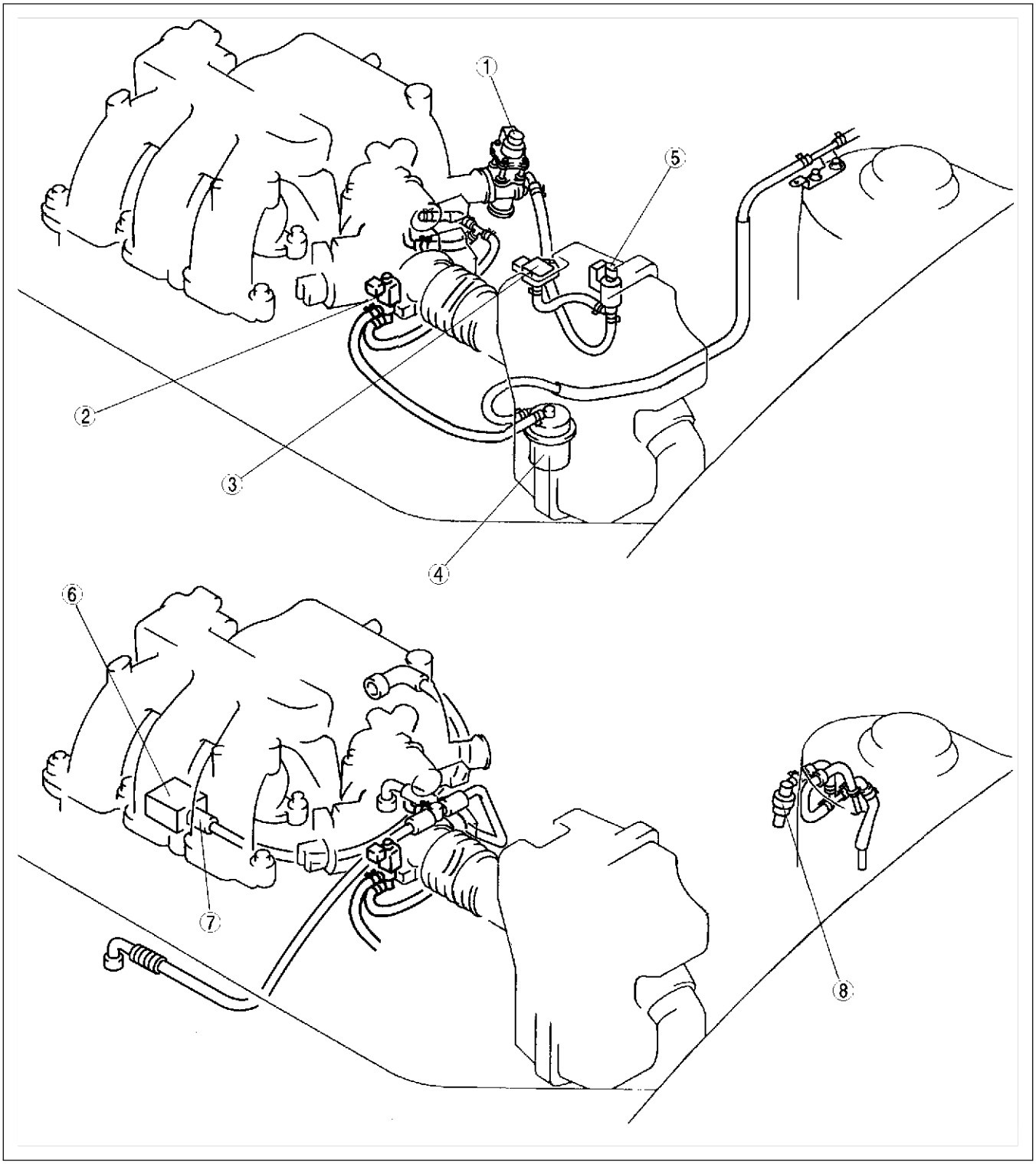

AME4210W001

1	EGR valve
2	Purge solenoid valve
3	EGR boost sensor
4	Catch tank

5	EGR boost sensor sorenoid valve
6	Oil separator
7	PCV valve
8	Evaporative gas checkvalve (one-way)

INTAKE-AIR SYSTEM REMOVAL/INSTALLATION

AME421013000W04

Warning

- **When the engine and intake-air system are hot, they can badly burn. Turn off the engine and wait until they are cool before removing the intake-air system.**
- **Fuel vapor is hazardous. It can easily ignite, causing serious injury and damage. Always keep sparks and flames away from fuel.**
- **Fuel line spills and leakage are dangerous. Fuel can ignite and cause serious injuries or death and damage. Fuel can also irritate skin and eyes. To prevent this, always complete the "Fuel Line Safety Procedure". (See F4–65 BEFORE REPAIR PROCEDURE.)**

1. Disconnect the negative battery cable.
2. Remove in the order indicated in the table.
3. Install in the reverse order of removal.

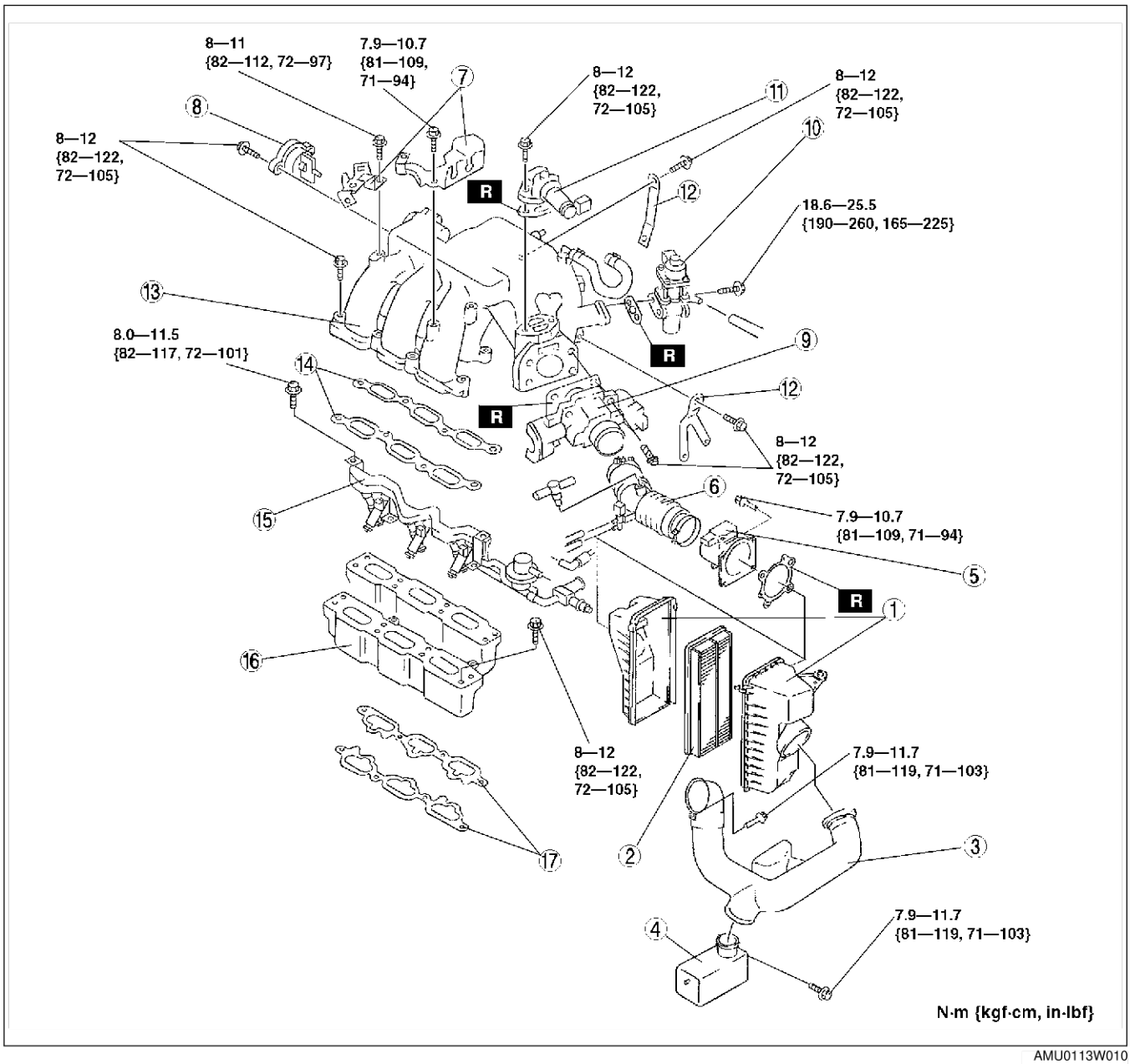

AMU0113W010

1	Air cleaner
2	Air cleaner element
3	Fresh-air duct (See F4–61 Fresh-air Duct Removal Note)
4	Resonance chamber (See F4–61 Resonance Chamber Removal Note)

5	Mass air flow sensor
6	Air hose
7	Accelerator cable bracket
8	IMCC actuator
9	Throttle body
10	EGR valve

11	IAC valve
12	Bracket
13	Dynamic chamber (See F4–61 Dynamic Chamber Installation Note)
14	Dynamic chamber gasket

15	Fuel distributor (See F4–61 Fuel Distributor Removal Note)
16	Intake manifold (See F4–61 Intake Manifold Installation Note)
17	Intake manifold gasket

Fresh-air Duct Removal Note

1. Remove the fuse box, battery and battery tray before removing the fresh-air duct. (See G–9 BATTERY REMOVAL/INSTALLATION.)

Resonance Chamber Removal Note

1. Remove the front mudguard (LH) before removing the resonance chamber.

Fuel Distributor Removal Note

1. Disconnect the fuel injector connector and fuel hoses using the **SST** before removing the fuel distributor. (See F4–75 FUEL INJECTOR REMOVAL/INSTALLATION.)

Intake Manifold Installation Note

1. Tighten the intake manifold installation bolts in the order indicated.

   Tightening torque
   8—12 N·m {82—122 kgf·cm, 72—105 in·lbf}

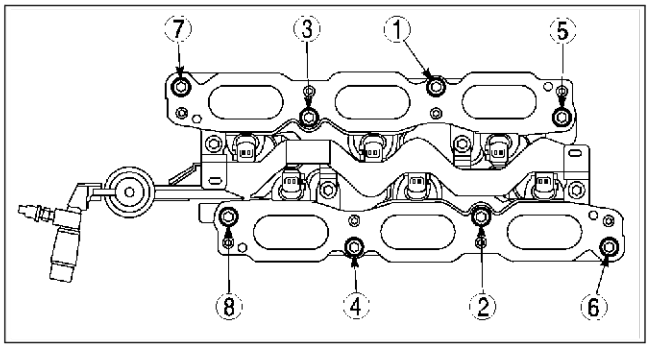

AMU0113W003

Dynamic Chamber Installation Note

1. Tighten the dynamic chamber installation bolts in the order indicated.

   Tightening torque
   8—12 N·m {82—122 kgf·m, 72—105 in·lbf}

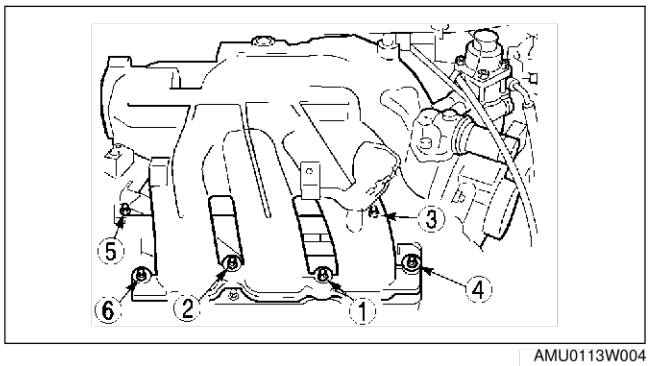

AMU0113W004

End Of Sec

IDLE AIR CONTROL (IAC) VALVE INSPECTION

AME421020661W01

Note
- Perform the following test only when directed.

Operation Test
1. Carry out the “Idle Air Control Inspection”. (See F4–300 Idle Air Control Inspection.)
   - If not as specified, perform the further inspection for the IAC valve.

Resistance Inspection
1. Disconnect the negative battery cable.
2. Disconnect the IAC valve connector.
3. Measure the resistance between the IAC valve terminals using an ohmmeter.
   - If not as specified, replace the IAC valve. (See F4–60 INTAKE-AIR SYSTEM REMOVAL/INSTALLATION.)
   - If as specified but the Operation Test is failed, carry out the “Circuit Open/Short Inspection”.

Resistance
8.69—10.56 ohms

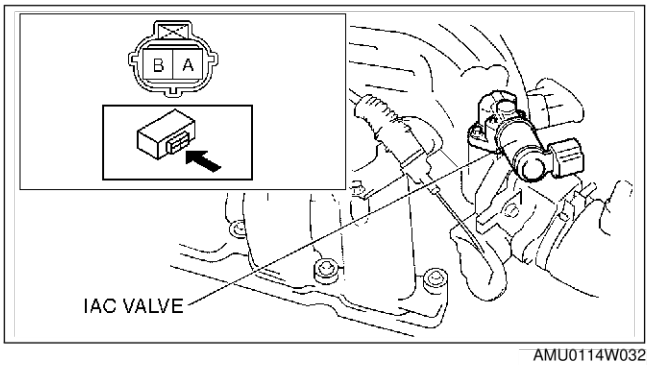

AMU0114W032

Circuit Open/Short Inspection
1. Disconnect the PCM connector. (See F4–90 PCM REMOVAL/INSTALLATION.)
2. Inspect the following wiring harnesses for open or short (continuity check).

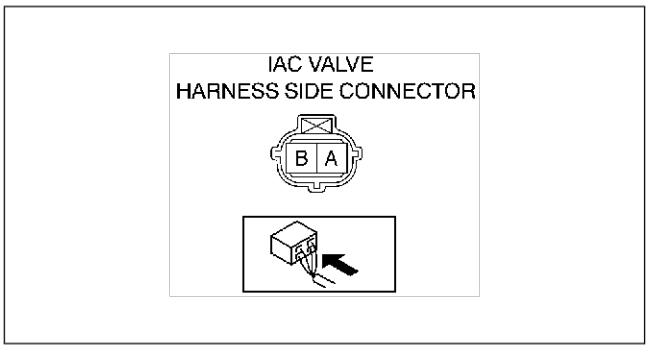

AME4210W101

Open circuit
- If there is no continuity, the circuit is open. Repair or replace the harness.
  - — IAC valve terminal A (harness-side) and PCM terminal 54
  - — IAC valve terminal B (harness-side) and PCM terminal 83

Short circuit
- If there is continuity, the circuit is short. Repair or replace the harness.
  - — IAC valve terminal A (harness-side) and power supply
  - — IAC valve terminal A (harness-side) and GND
  - — IAC valve terminal B (harness-side) and power supply
  - — IAC valve terminal B (harness-side) and GND

End Of Sie

INTAKE MANIFOLD COMMUNICATION CONTROL (IMCC) ACTUATOR INSPECTION

AME421018701W05

Note
- Perform the following test only when directed.

IMCC Actuator Operation Test

1. Disconnect the negative battery cable.
2. Disconnect the IMCC actuator connector.
3. Remove the IMCC actuator. (See F4–60 INTAKE-AIR SYSTEM REMOVAL/INSTALLATION.)
4. Connect battery positive voltage to terminal A and ground to terminal B as shown.
5. Verify that the IMCC actuator operates as shown.
   - If not specified, replace the IMCC actuator.
   - If as specified, carry out the “Circuit Open/ Short Inspection”.

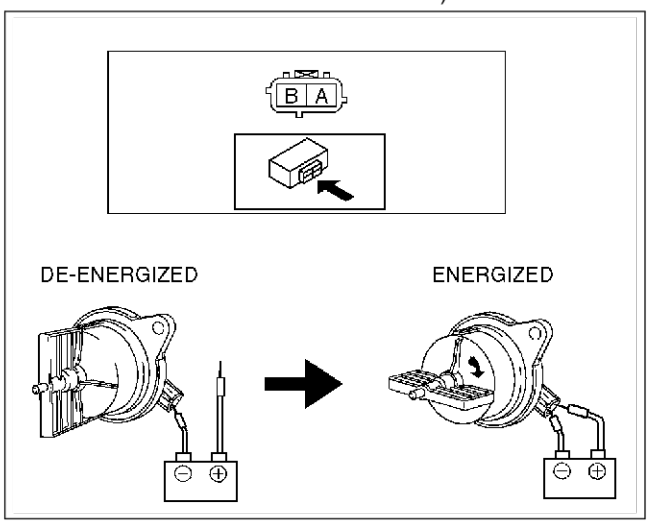

AMU0113W012

Circuit Open/Short Inspection

1. Disconnect the PCM connector. (See F4–90 PCM REMOVAL/INSTALLATION.)
2. Check the following wiring harnesses for open or short (continuity check).

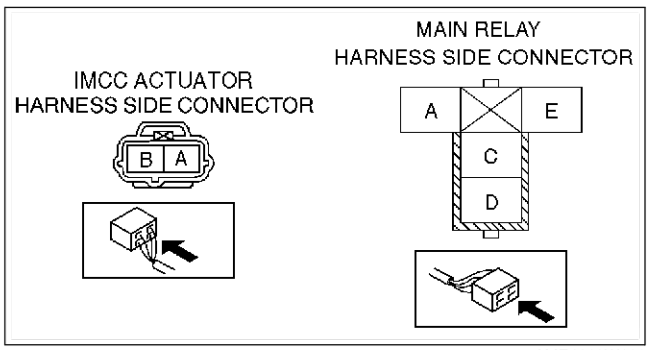

AME4210W100

Open circuit
- If there is no continuity, the circuit is open. Repair or replace the harness.
  - — IMCC actuator terminal B (harness-side) and PCM terminal 28
  - — IMCC actuator terminal A (harness-side) and main relay (harness-side) terminal D

Short circuit
- If there is continuity, the circuit is short. Repair or replace the harness.
  - — IMCC actuator terminal A (harness-side) and body GND
  - — IMCC actuator terminal B (harness-side) and power supply
  - — IMCC actuator terminal B (harness-side) and body GND

End Of Step

F4

ACCELERATOR PEDAL REMOVAL/INSTALLATION

1. Remove in the order indicated in the table.

1	Accelerator cable (See F4–64 Accelerator Cable Installation Note)
2	Accelerator pedal

2. Install in the reverse order of removal.

AME421041600W01

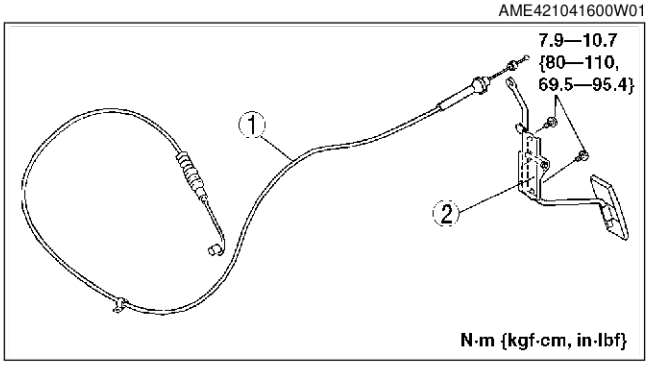

AMU0113W006

Accelerator Cable Installation Note

1. Carry out the “ACCELERATOR CABLE ADJUSTMENT” procedure after installing the accelerator cable. (See F4–64 ACCELERATOR CABLE ADJUSTMENT)

End Of Sie

ACCELERATOR CABLE INSPECTION

AME421041660W01

Free Play Inspection

1. Verify that the throttle valve is closed.
2. Push the cable into the housing without turning the throttle plate and put a white mark on the cable at the end of the housing.
3. Release the cable and measure the distance from the white mark to the end of the cable housing.
   - If not within the specification, adjust the accelerator cable. (See F4–64 ACCELERATOR CABLE ADJUSTMENT.)

Free play
1.5—4.0 mm {0.06—0.15 in}

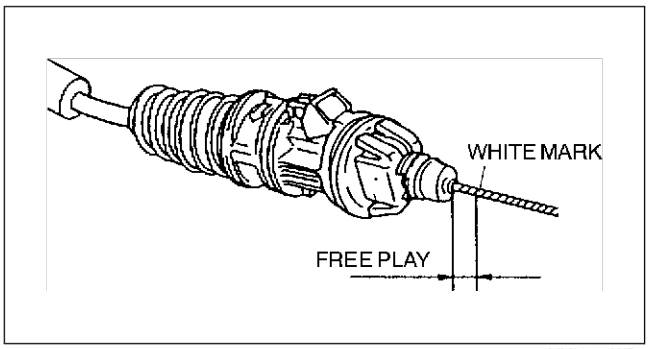

YMU113WB2

End Of Sie

ACCELERATOR CABLE ADJUSTMENT

AME421041660W02

1. Move the white locking tab A to the unlock position.
2. Turn stopper B to the unlock position.

Note
- If stopper B will not unlock, it may be necessary to carefully bend tab C out using a suitable tool.

3. To adjust the free play, push or pull the throttle cable housing directly behind the spring.
4. Measure the throttle cable free play, making sure that it is within the specification.

Free play
1.5—4.0 mm {0.06—0.15 in}

5. Turn stopper B to lock position.
6. Move the white locking tab A to the lock position.
7. Verify correct accelerator operation.

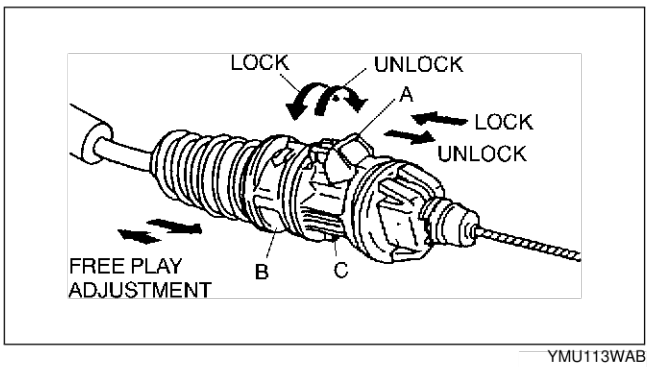

YMU113WAB

End Of Sie

FUEL SYSTEM

BEFORE REPAIR PROCEDURE

AME421201006W04

Warning

- **Fuel vapor is hazardous. It can easily ignite, causing serious injury and damage. Always keep sparks and flames away from fuel.**
- **Fuel line spills and leakage are dangerous. Fuel can ignite and cause serious injuries or death and damage. Fuel can also irritate skin and eyes. To prevent this, always complete the following "Fuel Line Safety Procedure".**

Fuel Line Safety Procedure

Note

- Fuel in the fuel system is under high pressure also when the engine is not running.

1. Remove the fuel-filler cap and release the pressure in the fuel tank.
2. Remove the fuel pump relay.
3. Start the engine.
4. After the engine stalls, crank the engine several times.
5. Turn the ignition switch to LOCK position.
6. Install the fuel pump relay.

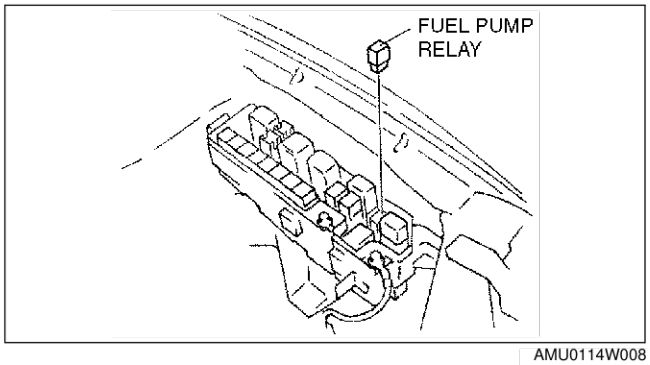

AMU0114W008

End Of Sie

AFTER REPAIR PROCEDURE

AME421201006W05

Warning

- **Fuel line spills and leakage are dangerous. Fuel can ignite and cause serious injuries or death and damage. When installing the fuel hose, observe "Fuel Leakage Inspection" described below.**

Fuel Leakage Inspection

Warning

- **Fuel line spills and leakage are dangerous. Fuel can ignite and cause serious injuries or death and damage. Always carry out the following procedure with the engine stopped.**

Caution

- **Connecting the wrong DLC terminal may possibly cause a malfunction. Carefully connect the specified terminal only.**

1. Short the DLC terminal F/P to body GND using a jumper wire.
2. Turn the ignition switch to ON position to operate the fuel pump.
3. Pressurize the system this way for **at least 5 minutes** to be sure of no leakage.
   - If there is fuel leakage, inspect the fuel hoses, hose clamps, and fuel pipe sealing surface and replace as necessary.
4. After repair, assemble the system and repeat Steps 1 to 3.

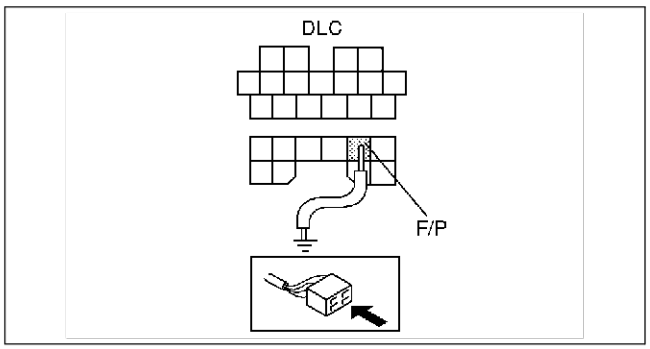

AME4212W019

End Of Sie

FUEL LINE PRESSURE INSPECTION

AME421201006W06

Warning

- **Fuel line spills and leakage are dangerous. Fuel can ignite and cause serious injuries or death. Fuel can also irritate skin and eyes. To prevent this, always complete the "BEFORE REPAIR PROCEDURE". (See F4–65 BEFORE REPAIR PROCEDURE.)**

Caution

- **Disconnecting/connecting the quick release connector without cleaning it may possibly cause damage to the fuel pipe and quick release connector. Always clean the quick release connector joint area before disconnecting/connecting using cloth or soft brush, and make sure that it is free of foreign material.**

1. Disconnect the negative battery cable.

Caution

- **The quick release connector may be damaged if the tab is turned too far. Do not turn the tab over the stopper.**

2. Disconnect the quick release connector from the fuel tank as follows:
   (1) Push the tab on the locking coupler **90 degrees** until it stops.
   (2) Pull the fuel hose straight back.

Note

- The stopper may be removed from the quick connector. Take care not to loose it.Reinstall it to the quick release connector before reconnecting the fuel line.

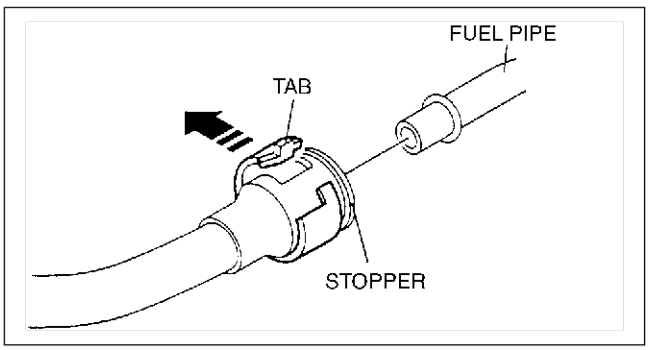

AME4212W004

- The locking coupler has two internal locking tabs which retain the pulsation damper pipe. Be sure that the tab on the locking coupler is rotated until it stops to release two internal locking tabs.

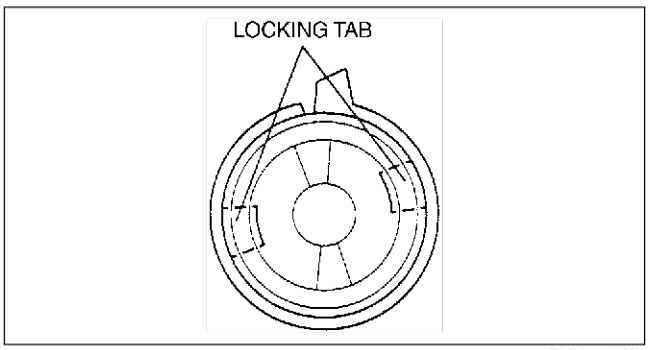

ZMU114WA2

3. Push the **SST** quick release connector into the fuel pipe and plastic fuel hose into the **SST** until a click is heard.

4. Turn the lever parallel to the hose of the **SST** as shown.
5. Connect the negative battery cable.
6. Verify that the selector lever is in N range.

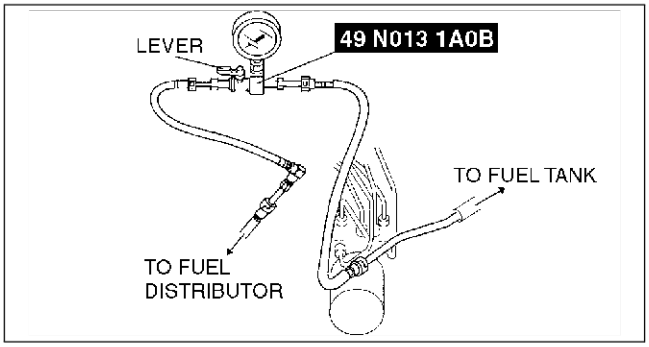

AME4212W003

7. Start the engine and let it idle. Measure the fuel line pressure.
   - If not as specified, inspect the following:
     Zero or low
     — FP circuit
     — FP
     — Fuel line (clogged)
     — Fuel leakage inside pressure regulator
     High
     — Pressure regulator for high pressure cause

   Fuel line pressure
   0.42—0.46 MPa {4.3—4.6 kgf/cm^2, 61—66 psi}

8. Observe the fuel pressure gauge indicator during heavy acceleration.
9. Verify that the fuel pressure fluctuation is within the specification during the test.
   - If not as specified, inspect the following:
     — PCM
     — FP
     — Pulsation damper
     — Fuel line for improper routing, kinks or leakage

   Fuel pressure fluctuation
   0.42—0.46 MPa {4.3—4.6 kgf/cm^2, 61—66 psi}

10. Turn the ignition switch to the LOCK position.
11. Measure the fuel hold pressure **after 5 min**.
    - If not as specified, inspect the following:
      — FP hold pressure
      — Fuel injector for leakage
      — Fuel line for improper routing, kinks or leakage

    Fuel hold pressure
    More than 0.176 MPa {1.79 kgf/cm^2, 25.5 psi}

12. Disconnect the **SST**.

    Note
    - A checker tab is integrated with quick release connector for new plastic fuel hoses. The checker tab will be released from the quick release connector after it is completely engaged with the fuel pipe.

13. Inspect the plastic fuel hose and fuel pipe sealing surface for damage and deformation, and replace as necessary.
    - If the quick release connector O-ring is damaged or has slipped, replace the plastic fuel hose.
14. Apply a small amount of clean engine oil to the sealing surface of the fuel pipe.
15. Reconnect the fuel main hose to the fuel distributor until a click is heard.
16. Lightly pull and push the quick release connector a few times by hand and verify that it can move **2.0—3.0 mm {0.08—0.11 in}** and it is connected securely.
    - If quick release connector does not move at all, verify that O-ring is not damaged and slipped, and reconnect the quick release connector.

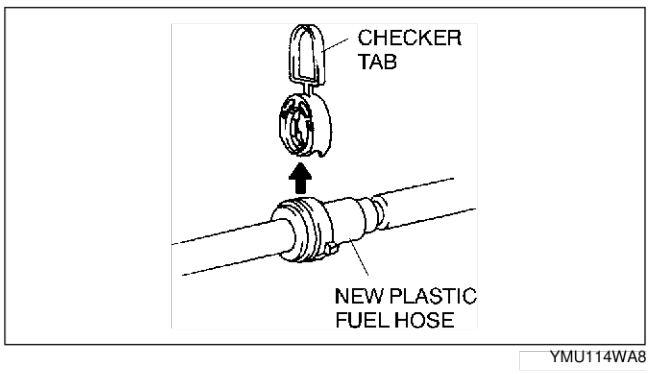

YMU114WA8

17. Complete the “AFTER REPAIR PROCEDURE”. (See F4–65 AFTER REPAIR PROCEDURE.)

End Of Sub

FUEL TANK REMOVAL/INSTALLATION

AME421242110W01

Warning

- **Repairing a fuel tank that has not been properly steam cleaned can be dangerous. Explosion or fire may cause death or serious injury. Always properly steam clean a fuel tank before repairing it.**
- **Fuel line spills and leakage are dangerous. Fuel can ignite and cause serious injuries or death and damage. Fuel can also irritate skin and eyes. To prevent this, do not damage the sealing surface of the fuel pump unit when removing or installing.**

Caution

- **Disconnecting/connecting the quick release connector without cleaning it may possibly cause damage to the fuel pipe and quick release connector. Always clean the quick release connector joint area before disconnecting/connecting using a cloth or soft brush, and make sure that it is free of foreign material.**

1. Level the vehicle.
2. Complete the “BEFORE REPAIR PROCEDURE”. (See F4–65 BEFORE REPAIR PROCEDURE.)
3. Disconnect the negative battery cable.
4. Remove the fuel pump unit. (See F4–71 FUEL PUMP UNIT REMOVAL/INSTALLATION.)
5. Siphon the fuel from the fuel tank.
6. Remove in the order indicated in the table.
7. Install in the reverse order of removal.
8. Complete the “AFTER REPAIR PROCEDURE”. (See F4–65 AFTER REPAIR PROCEDURE.)

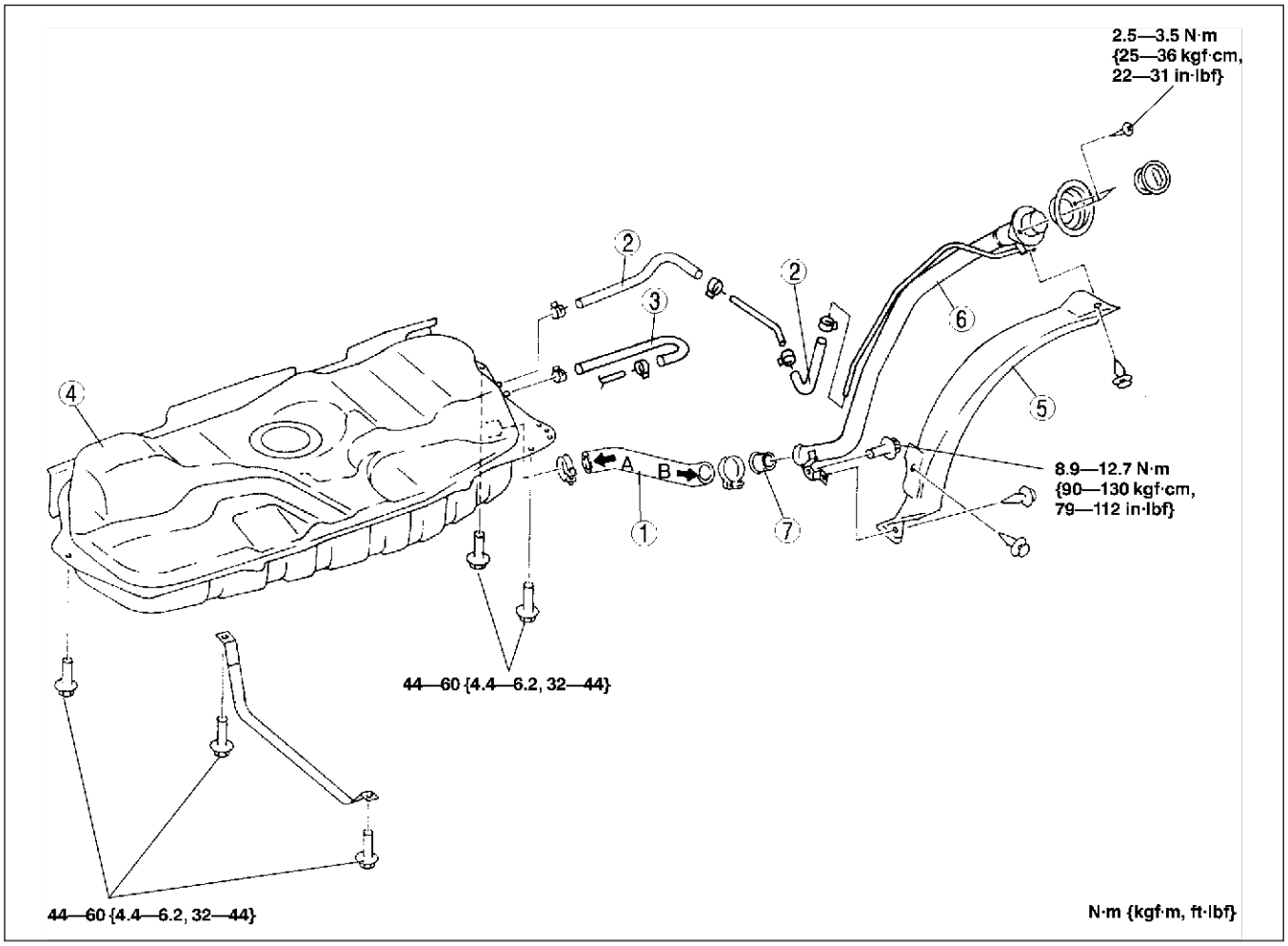

XME4012W003

1	Joint hose (See F4–69 Joint Hose Installation Note)
2	Breather hose (See F4–69 Breather Hose Installation Note)
3	Evaporative hose (See F4–69 Evaporative Hose Installation Note)

4	Fuel tank
5	Fuel-filler pipe protector
6	Fuel-filler pipe
7	Nonreturn valve

Evaporative Hose Installation Note

1. Fit evaporative hose onto the respective fittings, and install clamps as shown.

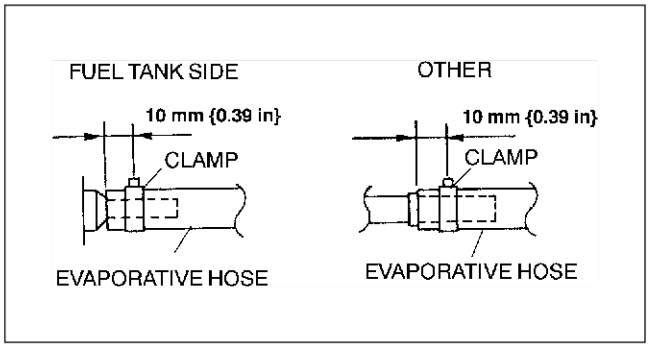

YMU114WAD

Breather Hose Installation Note

1. Fit the breather hose onto the respective fittings, and install clamps as shown.

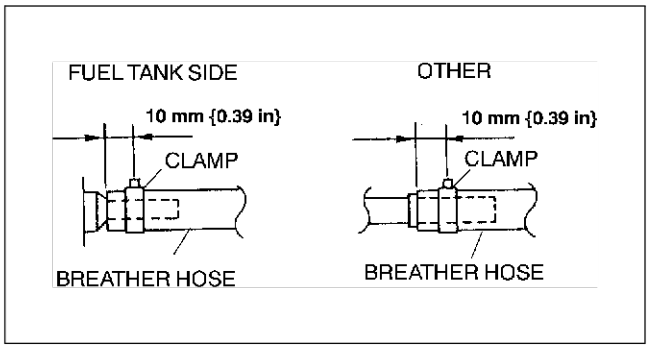

YMU114WAA

Joint Hose Installation Note

1. Fit the joint hose onto the respective fittings, and install clamps as shown.

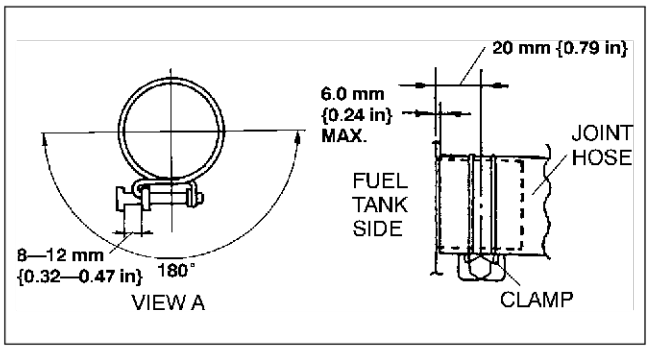

YMU114WAB

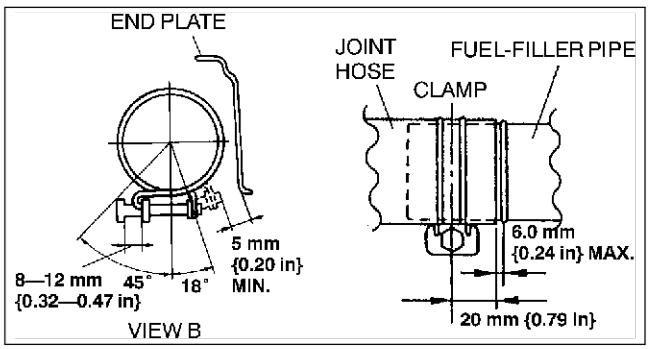

YMU114WAC

End Of Sta

FUEL TANK INSPECTION

AME421242110W02

Caution

- **Disconnecting/connecting the quick release connector without cleaning it may possibly cause damage to the fuel pipe and quick release connector. Always clean the quick release connector joint area before disconnecting/connecting using a cloth or soft brush, and make sure that it is free of foreign material.**

Note

- This inspection is for two rollover valves integrated in the fuel tank. The evaporative gas check valve (two-way) is integrated with each rollover valve.

1. Remove the fuel tank with the fuel pump unit. (See F4–68 FUEL TANK REMOVAL/INSTALLATION.)
2. Plug the fuel main pipe and fuel return pipe of the fuel pump unit.
3. Connect the vacuum pump to port A.
4. Level the fuel tank.
5. Apply pressure of **+4.5 kpa {+34 mmHg, +1.3 inHg}** to port A.
   (1) Plug port B and verify there is airflow from port C.
   (2) Plug port C and verify there is airflow from port B.
   - If there is no airflow, replace the fuel tank.
   - If there is airflow, turn the fuel tank upside-down and proceed to the next step.

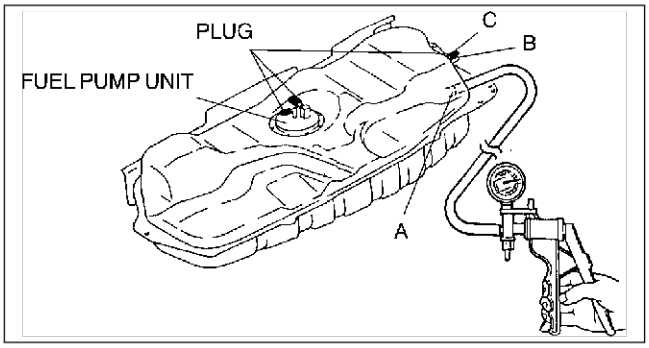

XME4012W004

6. Turn the fuel tank upside-down and apply pressure of **+4.5 kpa {+34 mmHg, +1.3 inHg}** to port A.
   (1) Plug port C and verify there is no airflow from port B.
   - If there is airflow, replace the fuel tank.
   (2) Plug port B and verify there is airflow from port C.
   - If there is no airflow, replace the fuel tank.

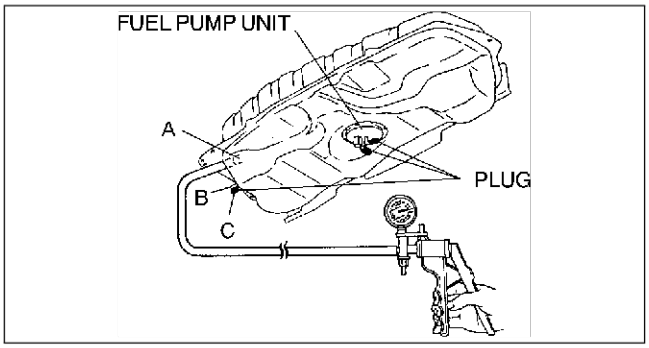

XME4012W005

End Of Sie

NONRETURN VALVE INSPECTION

AME421242270W01

1. Remove the nonreturn valve. (See F4–68 FUEL TANK REMOVAL/INSTALLATION.)
2. Verify that the nonreturn valve opens up to **90 degrees** when it is pushed from the fuel-filler pipe side, and it returns to the normal position by the spring force.
   - If the nonreturn valve does not open up to **90 degrees** or does not return to the normal position, replace the nonreturn valve.

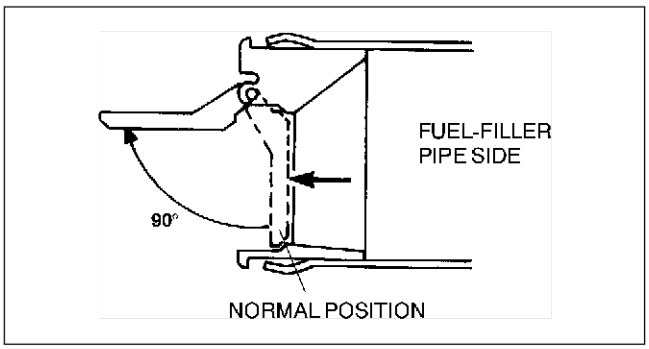

YMU114WAH

End Of Sie

FUEL PUMP UNIT REMOVAL/INSTALLATION

AME421213350W02

1. Complete the “BEFORE REPAIR PROCEDURE”. (See F4–65 BEFORE REPAIR PROCEDURE.)
2. Disconnect the negative battery cable.
3. Remove the front seats.
4. Remove the front scuff plates.
5. Remove the rear scuff plates.
6. Remove the console lower cover.
7. Loosen the parking brake lever installation bolts.
8. Partially peel back the floor covering until the service hole cover appears.
9. Remove in the order indicated in the table.

1	Service hole cover
2	Connector
3	Plastic fuel hose (See F4–72 Plastic Fuel Hose Removal Note) (See F4–72 Plastic Fuel Hose Installation Note)
4	Fuel pump unit

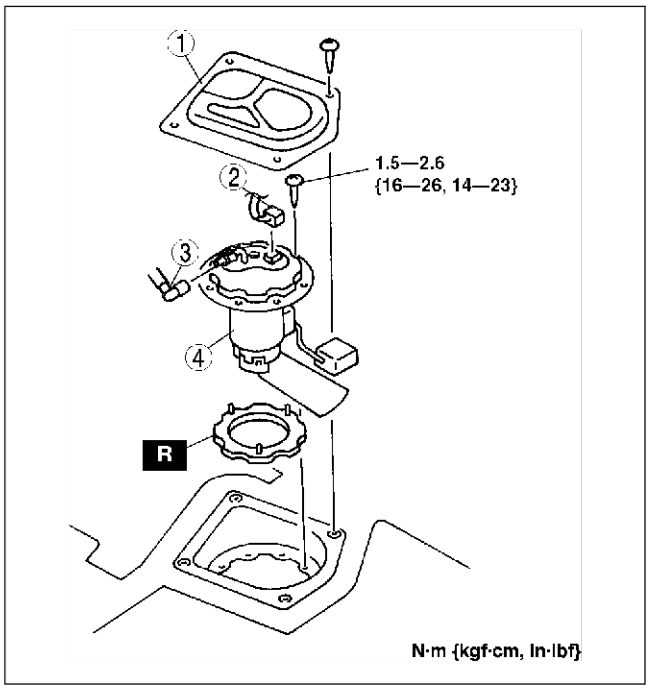

AMU0114W028

Warning

- **Fuel line spills and leakage are dangerous. Fuel can ignite and cause serious injuries or death and damage. Fuel can also irritate skin and eyes. To prevent this, do not damage the sealing surface of the fuel pump unit when removing or installing.**

Caution

- **Disconnecting/connecting the quick release connector without cleaning it may possibly cause damage to the fuel pipe and quick release connector. Always clean the quick release connector joint area before disconnecting/ connecting using a cloth or soft brush, and make sure that it is free of foreign material.**

10. Install in the reverse order of removal.
11. Complete the “AFTER REPAIR PROCEDURE”. (See F4–65 AFTER REPAIR PROCEDURE.)

Plastic Fuel Hose Removal Note

Caution
- **The quick release connector may be damaged if the tab is bent excessively. Do not expand the tab over the stopper.**

1. Disconnect the quick release connector.
   (1) Push the tab on the locking coupler **90 degrees** until it stops.
   (2) Pull the fuel hose straight back.

Note
- The stopper may be removed from the quick connector. Take care not to lose it. Reinstall it to the quick release connector before reconnecting the fuel line.

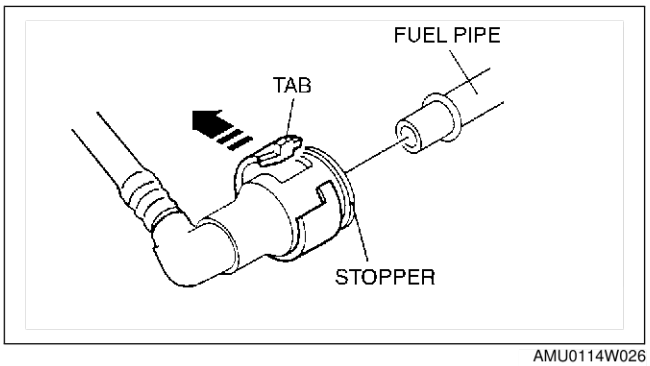

AMU0114W026

- The locking coupler has two internal locking tabs which retain the fuel pipe. Be sure that the tab on the locking coupler is rotated until it stops to release two internal locking tabs.

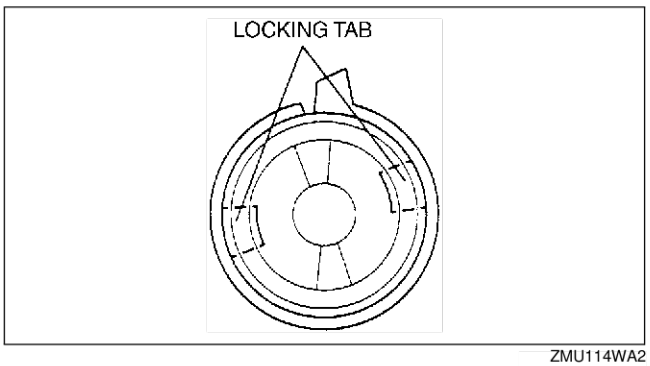

ZMU114WA2

2. Cover the disconnected quick release connector and fuel pipe with vinyl sheets or the like to prevent them from being scratched or contaminated with foreign material.

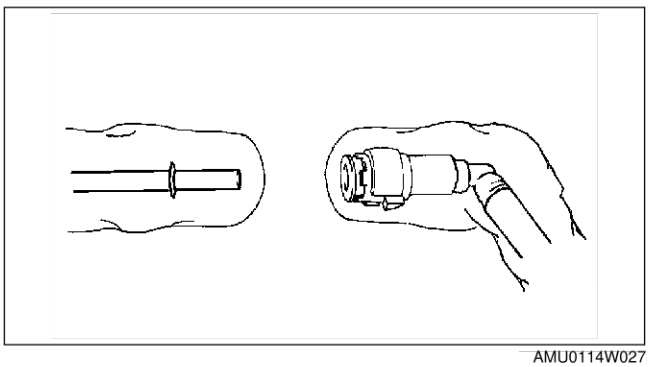
AMU0114W027

Plastic Fuel Hose Installation Note

Note
- A checker tab is integrated with quick release connector for new plastic fuel hoses. The checker tab will be released from the quick release connector after it is completely engaged with the fuel pipe.

1. When the retainer is not removed, perform the following procedure.
   (1) Inspect the fuel pump unit sealing surface for damage and deformation, and replace as necessary.
      - If the quick release connector O-ring is damaged, replace the plastic fuel hose.

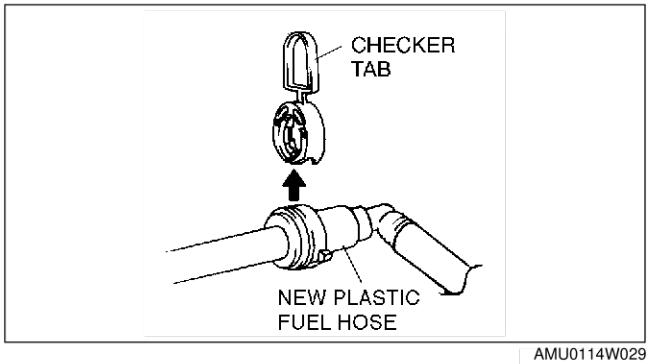

AMU0114W029

   (2) Slightly apply clean engine oil to the sealing surface of the fuel pump unit.
   (3) Align the fuel pipe on the fuel pump unit and quick release connector so that the tabs of the retainer are correctly fitted into the quick release connector. Push the quick release connector straight into the retainer until a click is heard.
   (4) Lightly pull and push the quick release connector a few times by hand and verify that it can move **2.0—3.0 mm {0.08—0.11 in}** and it is connected securely.
      - If quick release connector does not move at all, verify that O-ring is not damaged and slipped, and reconnect the quick release connector.

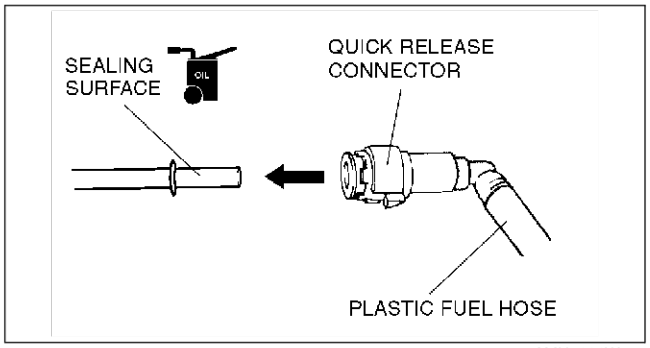

AMU0114W030

2. When the retainer is removed, perform the following procedure.

End Of Sie

FUEL PUMP UNIT DISASSEMBLY/ASSEMBLY

AME421213350W03

Warning
- **Fuel line spills and leakage are dangerous. Fuel can ignite and cause serious injuries or death and damage. Fuel can also irritate skin and eyes. To prevent this, do not damage the sealing surface of the fuel pump unit when removing or installing.**

1. Disassemble in the order indicated in the table.

1	Fuel pump unit cover
2	Fuel filter (high-pressure) and pressure regulator
3	Spacer
4	Rubber mount
5	Fuel filter (low-pressure)
6	Fuel pump
7	Fuel gauge sender unit

2. Assemble in the reverse order of disassembly.

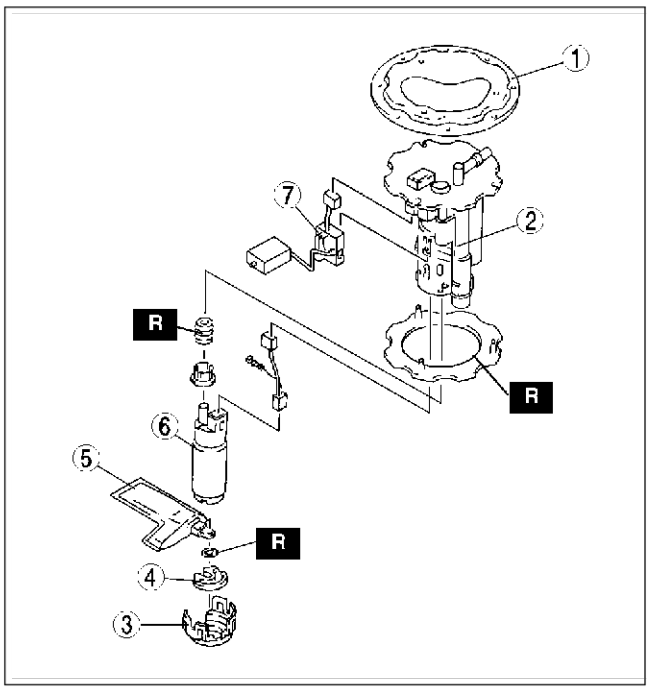

AMU0114W001

End Of Sie

F4

FUEL PUMP UNIT INSPECTION

AME421213350W04

Continuity Inspection

Note
- Perform the following test only when directed.

1. Disconnect the negative battery cable.
2. Remove the service hole cover. (See F4–71 FUEL PUMP UNIT REMOVAL/INSTALLATION.)
3. Disconnect the fuel pump unit connector.
4. Inspect for continuity between fuel pump unit connector terminals B and D.
   - If there is no continuity, replace the fuel pump body.
   - If as specified, carry out the “Circuit Open/ Short Inspection”.

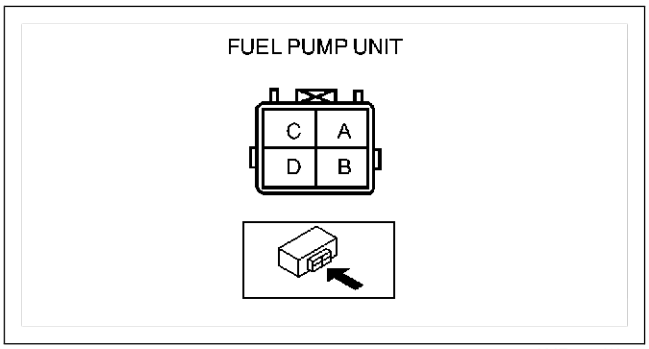

AME4212W007

Circuit Open/Short Inspection

1. Inspect the following wiring harness for open or short circuit (continuity check).

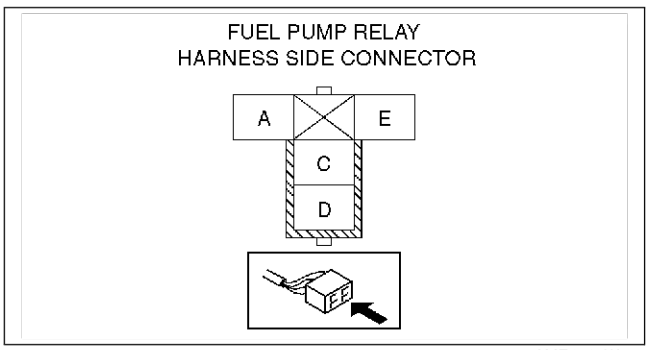

AME4212W008

Open circuit
- If there is no continuity, the circuit is open. Repair or replace the harness.
  - — Fuel pump unit terminal D (harness-side) and body GND.
  - — Fuel pump relay terminal D (harness-side) and fuel pump unit terminal B (harness-side).

Short circuit
- If there is continuity, the circuit is short. Repair or replace the harness.
  - — Fuel pump unit terminal D (harness-side) and power supply.
  - — Fuel pump unit terminal B (harness-side) and body GND.

Fuel Pump Maximum/Hold Pressure Inspection

Note
- The fuel pump maximum/hold pressure inspection can not be performed, as the pressure regulator has been built in the fuel pump unit. See the fuel line pressure inspection for fuel pressure inspection. (See F4–66 FUEL LINE PRESSURE INSPECTION.)

End Of Sie

FUEL FILTER (HIGH-PRESSURE) REMOVAL/INSTALLATION

AME421234801W01

1. Remove and install the fuel filter (high-pressure). (See F4–73 FUEL PUMP UNIT DISASSEMBLY/ ASSEMBLY.)

End Of Sie

FUEL INJECTOR REMOVAL/INSTALLATION

AME421213250W01

1. Complete the “BEFORE REPAIR PROCEDURE”. (See F4–65 BEFORE REPAIR PROCEDURE.)
2. Disconnect the negative battery cable.
3. Remove the dynamic chamber. (See F4–60 INTAKE-AIR SYSTEM REMOVAL/INSTALLATION.)
4. Disconnect the fuel injector connectors and remove the harness from the fuel distributor.
5. Remove in the order indicated in the table.

1	Plastic fuel hose (See F4–75 Plastic Fuel Hose Removal Note) (See F4–77 Plastic Fuel Hose Installation Note)
2	Hose
3	Fuel distributor
4	Fuel injector (See F4–76 Fuel Injector Installation Note)
5	Snap ring
6	Pulsation damper

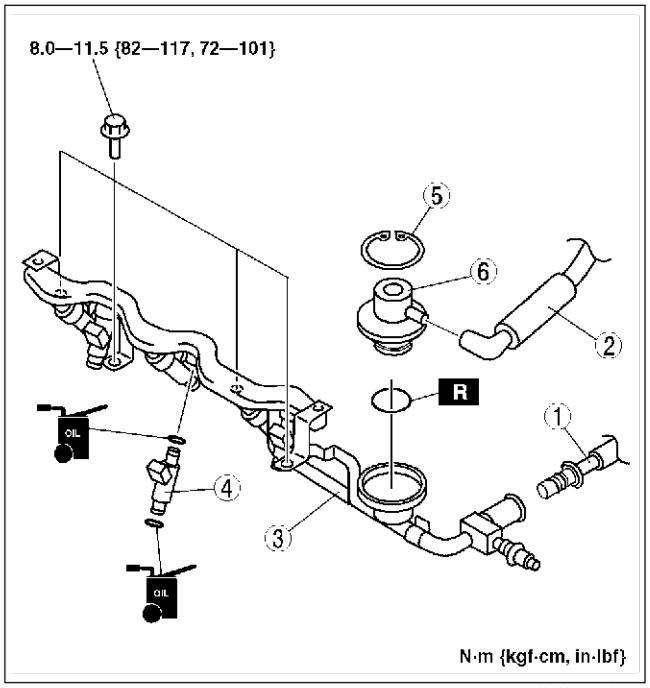

AMU0114W016

Caution

- **Disconnecting/connecting the quick release connector without cleaning it may possibly cause damage to the fuel pipe and quick release connector. Always clean the quick release connector joint area before disconnecting/ connecting using a cloth or soft brush, and make sure that it is free of foreign material.**

6. Install in the reverse order of removal.
7. Complete the “AFTER REPAIR PROCEDURE”. (See F4–65 AFTER REPAIR PROCEDURE.)

Plastic Fuel Hose Removal Note

1. Remove the clip from the quick release connector.

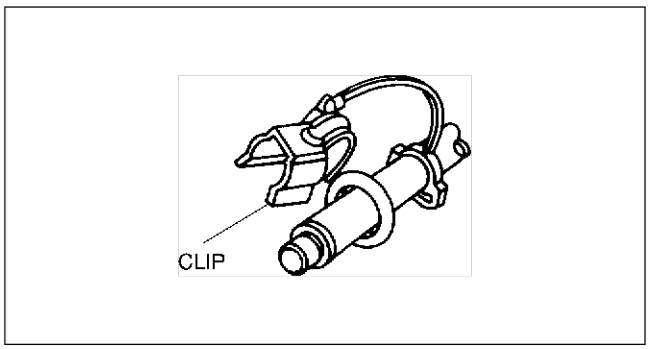

YMU114WAU

2. Set the **SST** (49 UN01 052) for 1/2 inch hose onto the quick release connector.

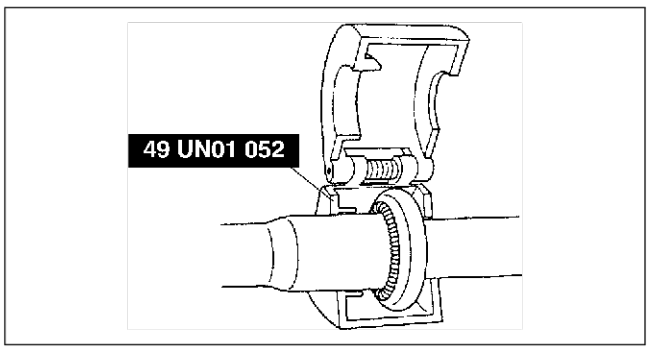

AMU0114W023

3. While looking through the inspection hole of the **SST**, insert the protruding part of the **SST** until it makes contact with the cage opening.

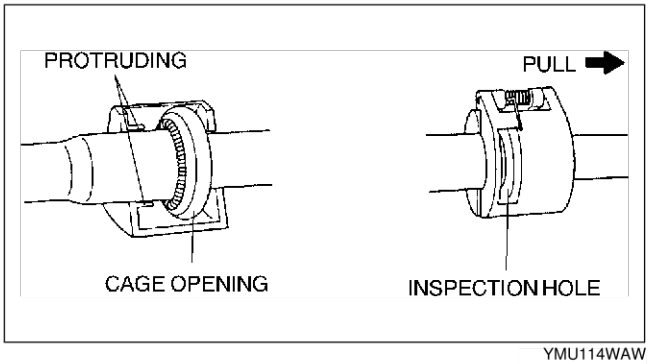

YMU114WAW

4. Use the **SST** to disconnect the plastic fuel hose from the fuel distributor by pulling the plastic fuel hose side.

Note
- The plastic fuel hose can be disconnected easily from the fuel distributor by pulling the plastic fuel hose while maintaining the pressure of the protruding part of the **SST**.

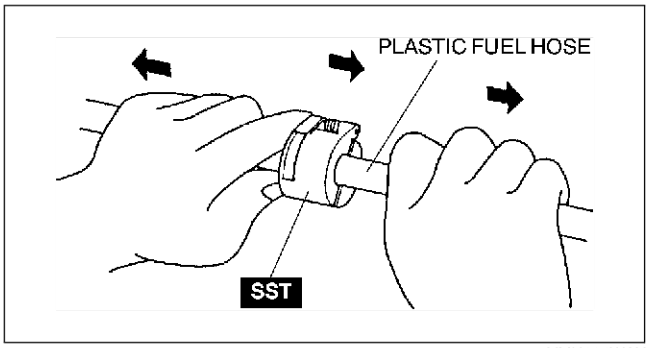

YMU114WAX

5. Remove the **SST** from the disconnected quick release connector.

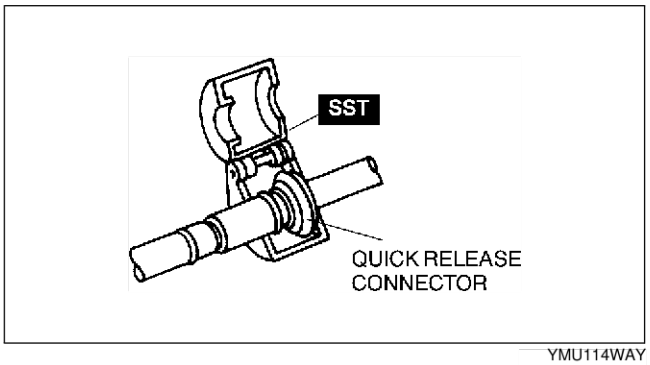

YMU114WAY

6. Cover the disconnected quick release connector and fuel distributor with the vinyl sheets or the like to prevent it from being scratched or contaminated with foreign material.

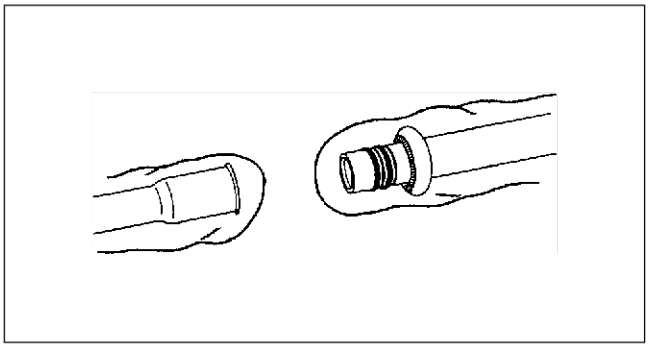
YMU114WAZ

Fuel Injector Installation Note
1. Inspect the O-rings for damage.
   - If the O-ring is damaged, replace the fuel injector.
2. Apply clean engine oil to the O-rings.

Plastic Fuel Hose Installation Note

1. Inspect the plastic fuel hose and fuel distributor sealing surface for damage and deformation, and replace as necessary.
   - If the quick release connector O-ring is damaged or has slipped, replace the plastic fuel hose.
2. Apply clean engine oil to the O-rings.
3. Connect the plastic fuel hose by twisting it onto the fuel distributor until the garter spring at the plastic fuel hose is over the flared end of the fuel distributor.

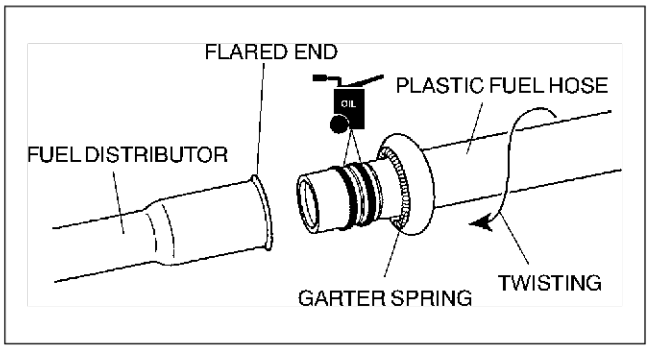

YMU114WB0

4. Lightly pull and push the quick release connector by hand and verify that it is installed securely.

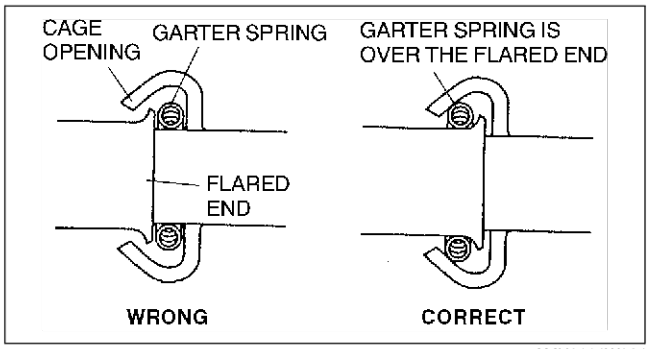

AMU0114W024

5. Install the clip to the quick release connector.

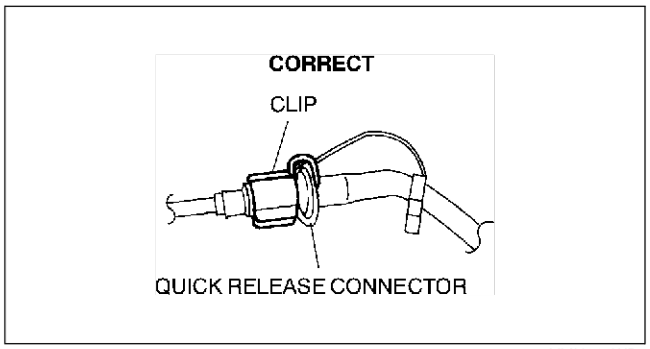

YMU114WB2

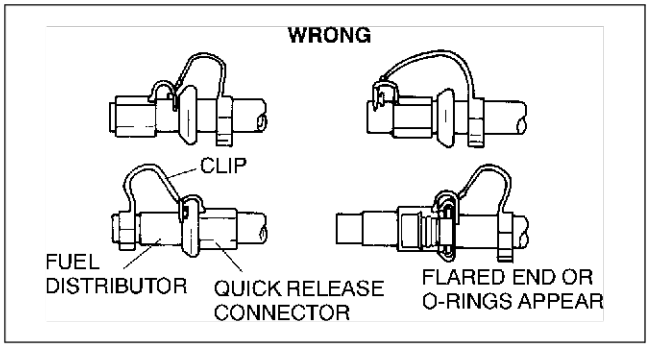

YMU114WBA

End Of Ste

FUEL INJECTOR INSPECTION

AME421213250W02

Operation Test

1. Carry out the “Fuel Injector Operation Inspection”. (See F4–301 Fuel Injector Operation Inspection.)
   - If not as specified, perform the further inspection for the fuel injectors.

Resistance Inspection

Note
- Perform the following test only when directed.

1. Turn the ignition switch to LOCK position.
2. Disconnect the negative battery cable.
3. Disconnect the fuel injector terminal A and B connectors.
4. Measure the resistance of the fuel injector using an ohmmeter.
   - If not as specified, replace the fuel injector. (See F4–75 FUEL INJECTOR REMOVAL/INSTALLATION.)
   - If as specified but “Operation Test” is failed, carry out the “Circuit Open/Short Inspection”. Inspect for open or short circuit.

Resistance
13.1—14.5 ohms [20 °C {68 °F}]

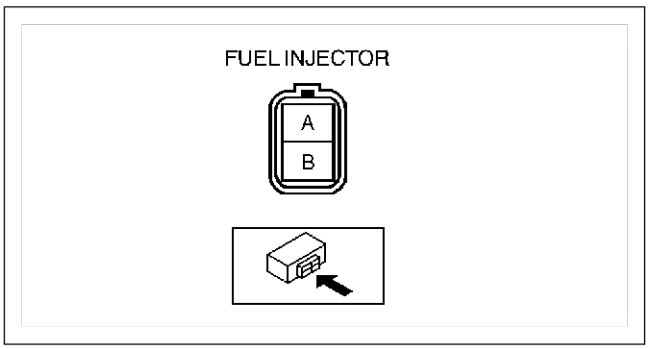

AME4212W009

Circuit Open/Short Inspection

1. Disconnect the PCM connector. (See F4–90 PCM REMOVAL/INSTALLATION.)
2. Inspect the following wiring harness for open or short (continuity check).

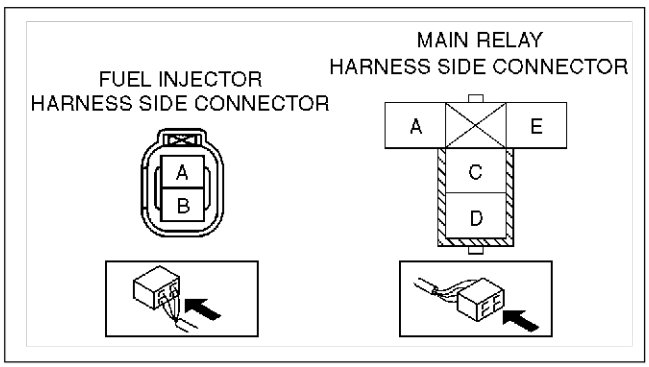

AME4212W103

Open circuit
- If there is no continuity, the circuit is open. Repair or replace the harness.
  - — No.1 cylinder fuel injector terminal A (harness-side) and PCM terminal 75.
  - — No.2 cylinder fuel injector terminal A (harness-side) and PCM terminal 101.
  - — No.3 cylinder fuel injector terminal A (harness-side) and PCM terminal 74.
  - — No.4 cylinder fuel injector terminal A (harness-side) and PCM terminal 100.
  - — No.5 cylinder fuel injector terminal A (harness-side) and PCM terminal 73.
  - — No.6 cylinder fuel injector terminal A (harness-side) and PCM terminal 99.
  - — No.1 cylinder fuel injector terminal B (harness-side) and main relay (harness-side) terminal D through common connector.
  - — No.2 cylinder fuel injector terminal B (harness-side) and main relay (harness-side) terminal D through common connector.
  - — No.3 cylinder fuel injector terminal B (harness-side) and main relay (harness-side) terminal D through common connector.
  - — No.4 cylinder fuel injector terminal B (harness-side) and main relay (harness-side) terminal D through common connector.
  - — No.5 cylinder fuel injector terminal B (harness-side) and main relay (harness-side) terminal D through common connector.
  - — No.6 cylinder fuel injector terminal B (harness-side) and main relay (harness-side) terminal D through common connector.

Short circuit
- If there is continuity, the circuit is short. Repair or replace the harness.
  - — No.1 cylinder fuel injector terminal A (harness-side) and body GND.
  - — No.2 cylinder fuel injector terminal A (harness-side) and body GND.
  - — No.3 cylinder fuel injector terminal A (harness-side) and body GND.
  - — No.4 cylinder fuel injector terminal A (harness-side) and body GND.

— No.5 cylinder fuel injector terminal A (harness-side) and body GND.
— No.6 cylinder fuel injector terminal A (harness-side) and body GND.
— No.1 cylinder fuel injector terminal B (harness-side) and power supply.
— No.2 cylinder fuel injector terminal B (harness-side) and power supply.
— No.3 cylinder fuel injector terminal B (harness-side) and power supply.
— No.4 cylinder fuel injector terminal B (harness-side) and power supply.
— No.5 cylinder fuel injector terminal B (harness-side) and power supply.
— No.6 cylinder fuel injector terminal B (harness-side) and power supply.

Fuel Leakage Test

Warning
- **Fuel line spills and leakage are dangerous. Fuel can ignite and cause serious injuries or death and damage. Always carry out the following procedure with the engine stopped.**

Note
- Perform the following test only when directed.

1. Complete the “BEFORE REPAIR PROCEDURE”. (See F4–65 BEFORE REPAIR PROCEDURE.)
2. Disconnect the negative battery cable.
3. Remove the fuel injectors together with the fuel distributor with connected to fuel hose. (See F4–75 FUEL INJECTOR REMOVAL/INSTALLATION.)
4. Fasten the fuel injectors firmly to the fuel distributor with wire.
5. Connect the negative battery cable.

Caution
- **Connecting the wrong DLC terminal may possibly cause a malfunction. Carefully connect the specified terminal only.**

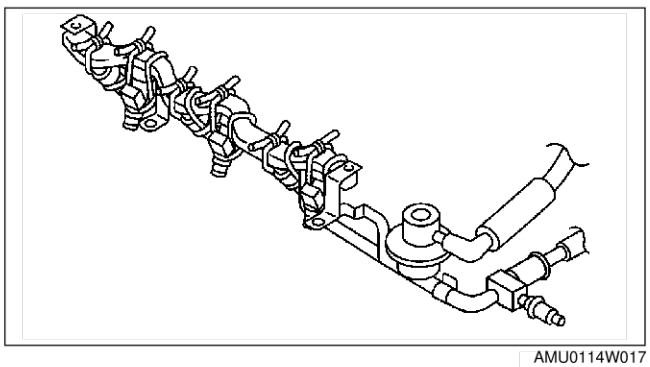
AMU0114W017

6. Short the DLC terminal F/P to body GND using a jumper wire.
7. Turn the ignition switch to ON position to operate the fuel pump.

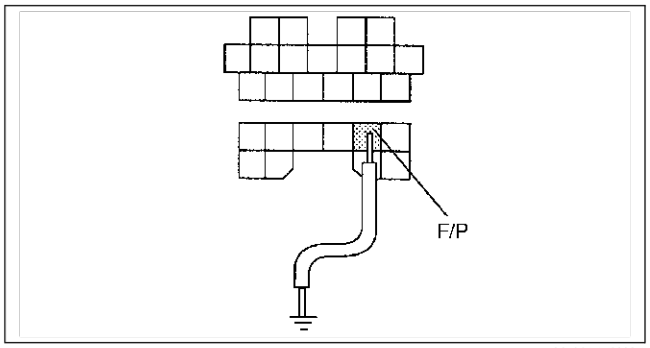

X3U114WA1

8. Tilt the fuel injectors **approx. 60 degrees.**
9. Verify that fuel leakage from the fuel injector nozzles is within the specification.
   - If not as specified, replace the fuel injector.

Fuel leakage
Less than 1 drop/2 minutes

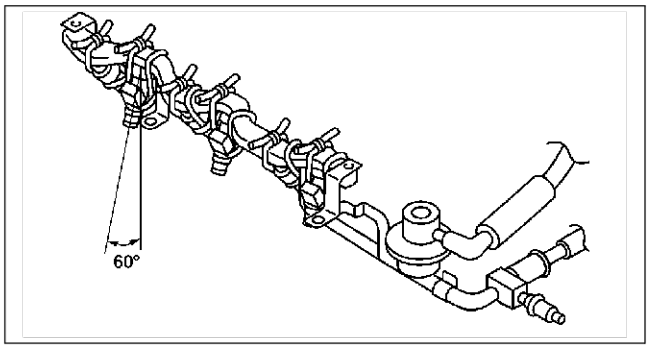

AMU0114W018

10. Turn the ignition switch to LOCK position and remove the jumper wire.
11. Complete the “AFTER REPAIR PROCEDURE”. (See F4–65 AFTER REPAIR PROCEDURE.)

Volume Test

Warning
- **Fuel line spills and leakage are dangerous. Fuel can ignite and cause serious injuries or death and damage. Always carry out the following procedure with the engine stopped.**

Note
- If there is an after market fuel injector tester, perform the following test.
- If there is no an after market fuel injector tester, perform “Operation Test”, “Resistance Inspection”, and “Fuel Leakage Test” to verify the fuel injector is okay or not.

1. Complete the “BEFORE REPAIR PROCEDURE”. (See F4–65 BEFORE REPAIR PROCEDURE.)
2. Disconnect the negative battery cable.
3. Remove the fuel injectors. (See F4–75 FUEL INJECTOR REMOVAL/INSTALLATION.)
4. Connect the fuel injector to the fuel injector tester.
5. Measure the injection volume of each fuel injector using a graduated container.
   - If not as specified, replace the fuel injector.

Injection volume
49—65 ml {49—65 cc, 1.7—2.1 fl oz.}/15 sec.

6. Turn the ignition switch to LOCK position and disconnect the jumper wire.
7. Complete the “AFTER REPAIR PROCEDURE”. (See F4–65 AFTER REPAIR PROCEDURE.)

Atomization
1. Inspect atomization pattern.
   - If the atomization is faulty, replace the fuel injector.

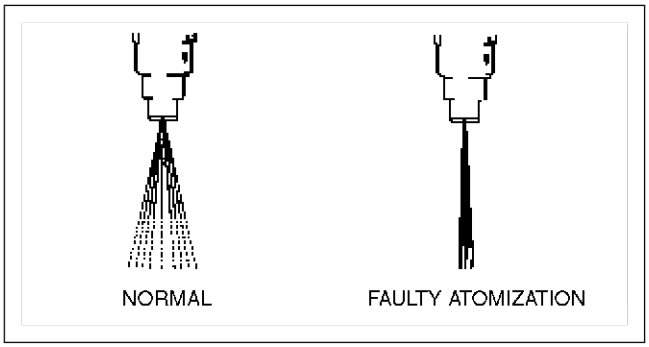

AME4112W005

End Of Sie

PRESSURE REGULATOR INSPECTION

AME421213280W01

Note
- Due to the adoption of the mechanical returnelss fuel system, the pressure regulator cannot be inspected separately.

1. Perform “FUEL LINE PRESSURE INSPECTION”. (See F4–66 FUEL LINE PRESSURE INSPECTION.)

End Of Sie

PULSATION DAMPER REMOVAL/INSTALLATION

AME421220180W01

1. Remove and install the pressure regulator. (See F4–75 FUEL INJECTOR REMOVAL/INSTALLATION.)

End Of Sie

PULSATION DAMPER INSPECTION

AME421220180W02

1. Remove the pulsation damper. (See F4–80 PULSATION DAMPER REMOVAL/INSTALLATION.)
2. Visually inspect the pulsation damper for damage and cracks. Also inspect if there is no extreme rust which will cause fuel leakage.
   - If either is observed, replace the pulsation damper.

End Of Sie

EXHAUST SYSTEM

EXHAUST SYSTEM INSPECTION

AME421440000W03

1. Start the engine and inspect each exhaust system component for exhaust gas leakage.
   - If leakage is found, repair or replace as necessary.

End Of Sta

EXHAUST SYSTEM REMOVAL/INSTALLATION

AME421440000W04

Warning

- **When the engine and exhaust system are hot, they can badly burn. Turn off the engine and wait until thzey are cool before removing the exhaust system.**

1. Disconnect the negative battery cable.
2. Remove in the order indicated in the table.
3. Install in the reverse order of removal.

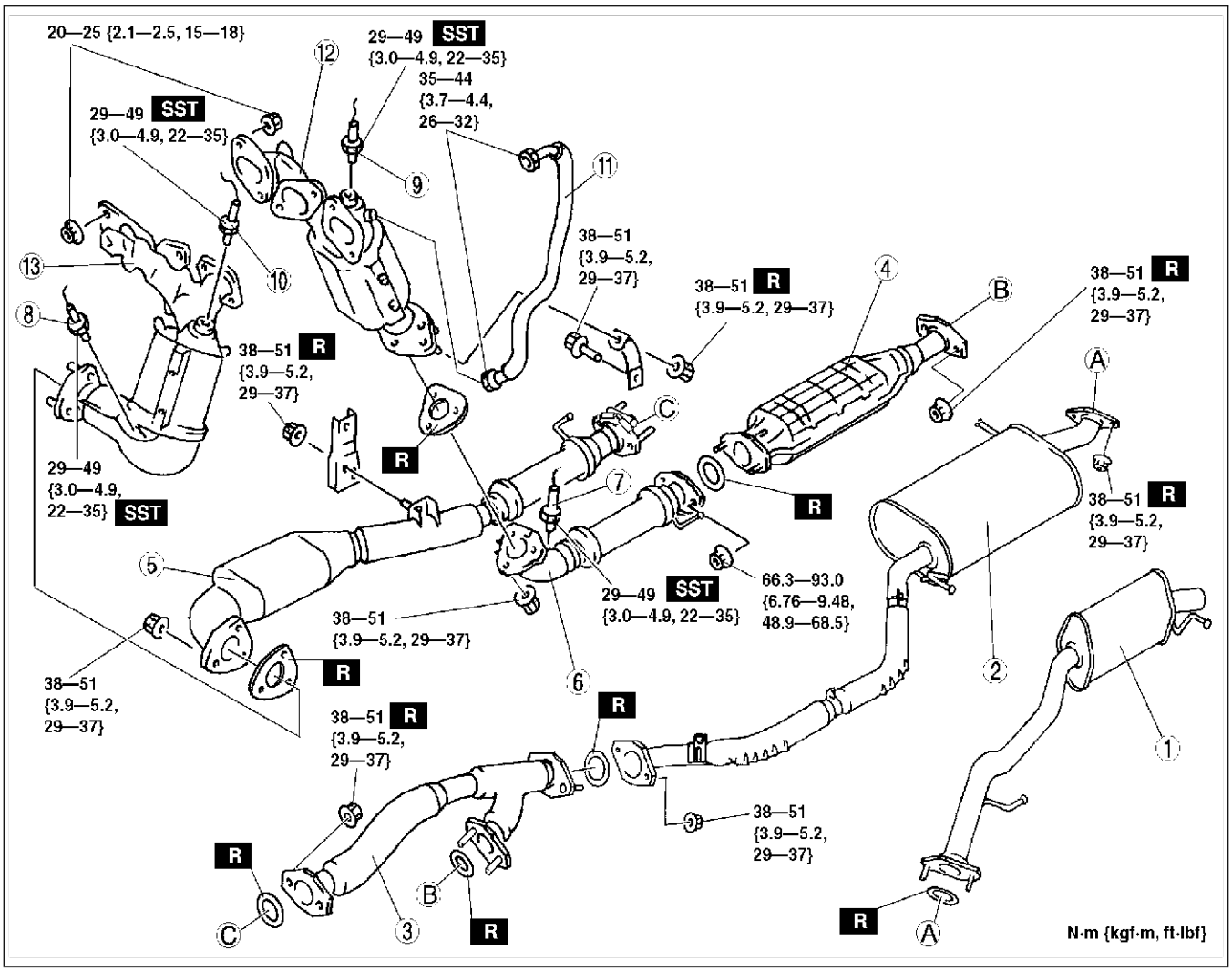

AMU0115W001

1	After silencer
2	Main silencer
3	Middle pipe
4	TWC (RH)
5	TWC (LH)
6	Front pipe (See F4–82 Front Pipe Removal Note)
7	Rear HO2S (RH) (See F4–82 HO2S Removal Note)
8	Rear HO2S (LH) (See F4–82 HO2S Removal Note)

9	Front HO2S (RH) (See F4–82 HO2S Removal Note)
10	Front HO2S (LH) (See F4–82 HO2S Removal Note)
11	EGR pipe
12	Exhaust manifold (RH) (See F4–82 Exhaust Manifold (RH) Removal Note) (See F4–82 Exhaust Manifold (RH) Installation Note)
13	Exhaust manifold (LH) (See F4–82 Exhaust Manifold (LH) Installation Note)

Front Pipe Removal Note

1. Remove the transverse member before removing the front pipe.

HO2S Removal Note

1. Remove the HO2S using the **SST**.

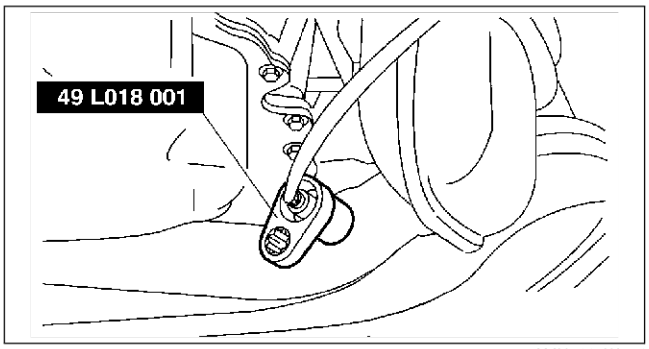

AMU0115W004

Exhaust Manifold (RH) Removal Note

1. Disconnect the generator, but do not remove it from the vehicle. After disconnection, fix the generator using a rope to prevent it from falling.

Exhaust Manifold (LH) Installation Note

1. Tighten the exhaust manifold installation nuts in the order shown.

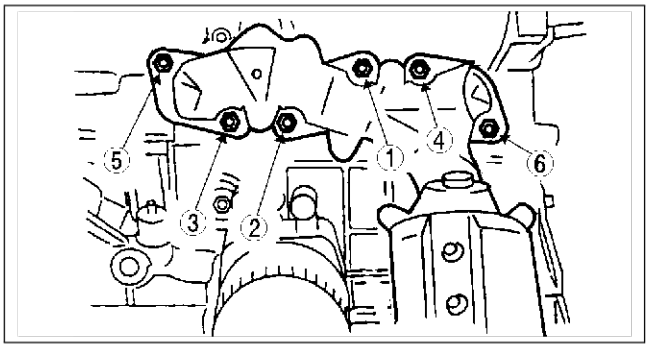

AME4214W002

Exhaust Manifold (RH) Installation Note

1. Tighten the exhaust manifold installation nuts in the order shown.

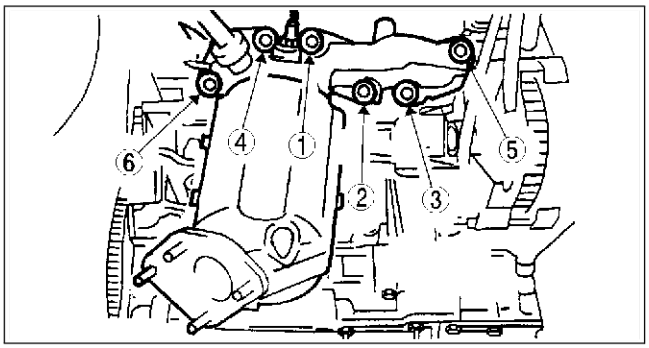

AME4214W003

End Of Sec

EMISSION SYSTEM

CHARCOAL CANISTER REMOVAL/INSTALLATION

AME421613970W01

1. Lift up the vehicle.
2. Remove in the order indicated in the table.
3. Install in the reverse order of removal.

1	Evaporative hose
2	Charcoal canister
3	Charcoal canister protector

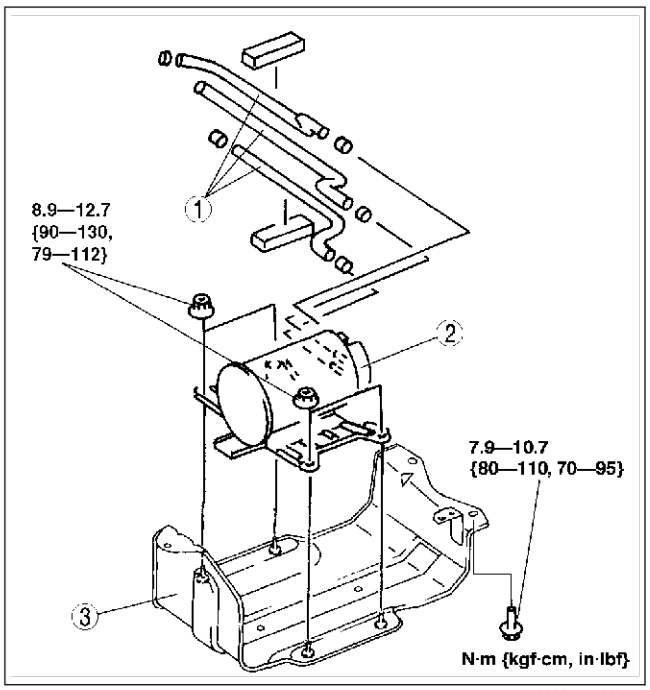

AME4216W014

End Of Site

CHARCOAL CANISTER INSPECTION

AME421613970W02

1. Remove the charcoal canister. (See F4–83 CHARCOAL CANISTER REMOVAL/INSTALLATION.)
2. Plug the atmosphere side pot and purge solenoid valve side pot of the charcoal canister.
3. Blow air into the charcoal canister from the fuel tank side port and verify that there is no air leakage from the case.
   - If not as specified, replace the charcoal canister.

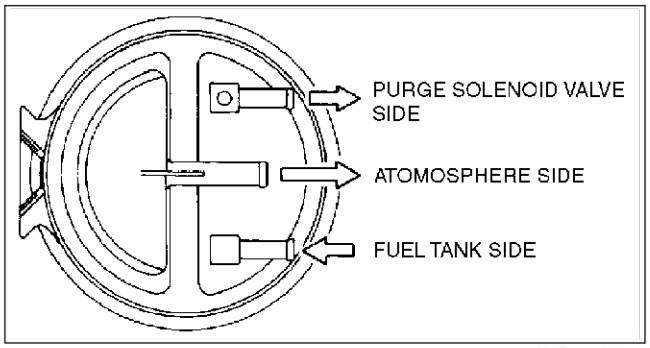

AME4216W005

End Of Site

F4

CATCH TANK INSPECTION

AME421613978W01

1. Remove the catch tank.
2. Plug the purge solenoid valve side port of the catch tank.
3. Blow from the charcoal canister side port and verify that there is no air leakage from the case.
   - If not as specified, replace the catch tank.

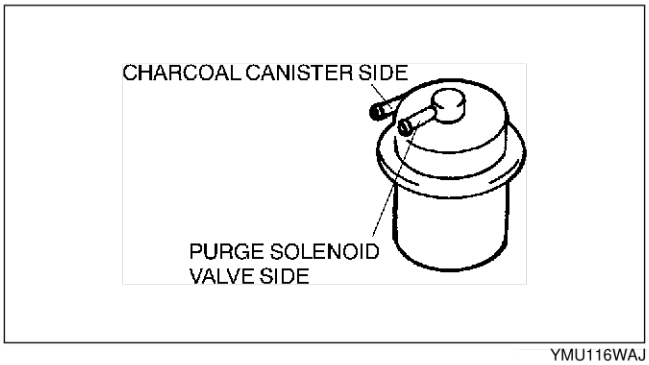

YMU116WAJ

End Of Sie

EVAPORATIVE GAS CHECK VALVE (ONE-WAY) INSPECTION

AME421613840W01

1. Remove the evaporative gas check valve (one-way).
2. Apply pressure to port A, and verify that there is no airflow.
   - If there is airflow, replace the evaporative gas check valve (one-way).
3. Apply negative pressure to port A, and verify that there is air flow.
   - If there is no airflow, replace the evaporative gas check valve (one-way).

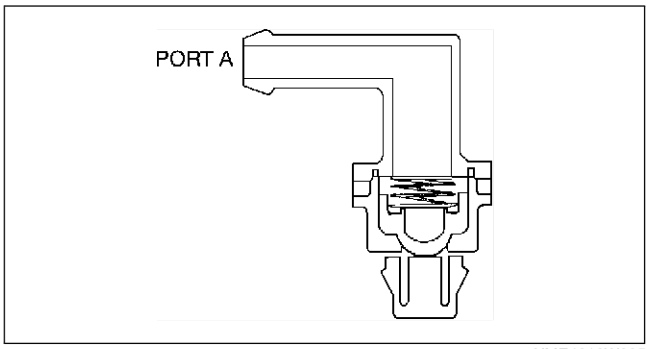

XME4016W005

End Of Sie

PURGE SOLENOID VALVE REMOVAL/INSTALLATION

AME421618740W01

1. Disconnect the negative battery cable.
2. Remove in the order indicated in the table.

1	Evaporative hose (to catch tank) (See F4–85 Vacuum/Evaporative Hose Installation Note)
2	Vacuum hose (to intake manifold) (See F4–85 Vacuum/Evaporative Hose Installation Note)
3	Purge solenoid valve

3. Install in the reverse order of removal.

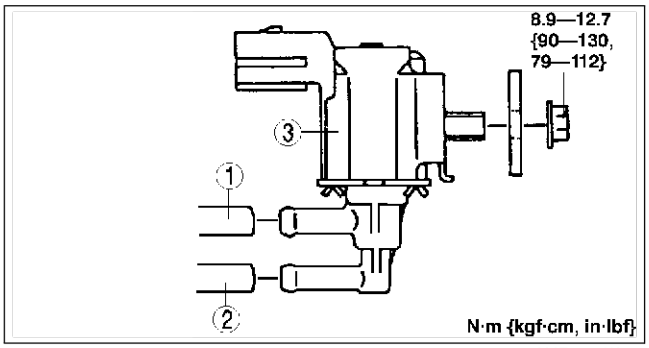

AME4216W100

Vacuum/Evaporative Hose Installation Note

1. Fit the vacuum hose (purge solenoid valve) onto the respective fittings, and install clamps as shown.

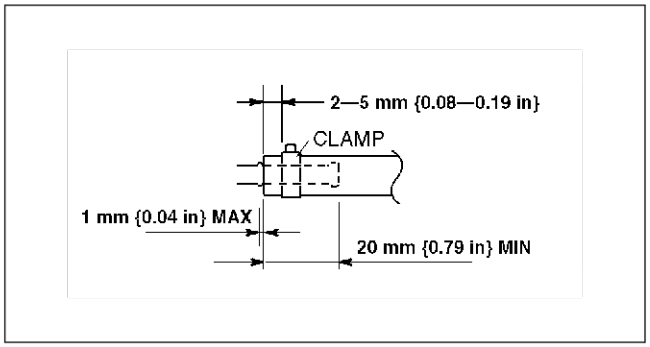

AME4110W015

End Of Ste

PURGE SOLENOID VALVE INSPECTION

AME421618740W02

Airflow Inspection

Note

- Perform the following test only when directed.

1. Disconnect the negative battery cable.
2. Remove the purge solenoid valve. (See F4–84 PURGE SOLENOID VALVE REMOVAL/INSTALLATION.)
3. Inspect airflow between the ports under the following conditions.
   - If not as specified, replace the purge solenoid valve.
   - If as specified, carry out the “Circuit Open/Short Inspection”.

○—○ : Continuity ○—○ : Airflow

Step	Terminal		Port	
	A	B	A	B
1	○—○			
2	B+	GND	○—○	

X3U116WC1

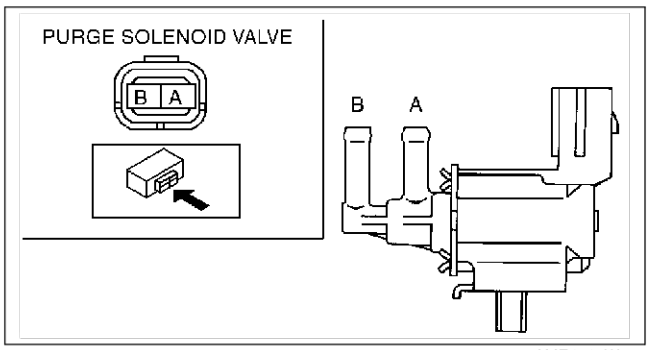

AME4216W007

Circuit Open/Short Inspection

1. Disconnect the PCM connector. (See F4–90 PCM REMOVAL/INSTALLATION.)
2. Inspect the following wiring harness for open or short (Continuity check).

Open circuit

- If there is no continuity, the circuit is open. Repair or replace the harness.
  - — Purge solenoid valve terminal B (harness-side) and PCM terminal 18
  - — Purge solenoid valve terminal A (harness-side) and main relay terminal D (harness-side)

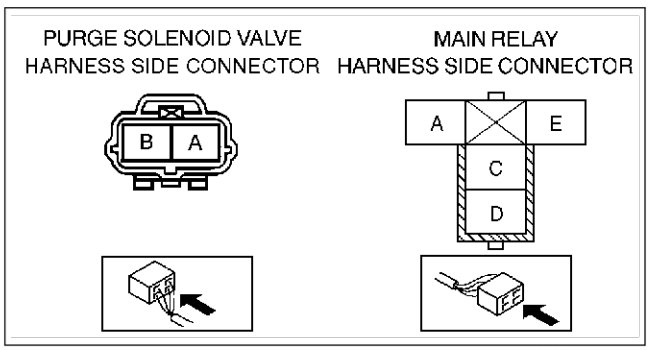

AME4216W008

Short circuit

- If there is continuity, the circuit is shorted. Repair or replace the harness.
  - — Purge solenoid valve terminal B (harness-side) and body GND
  - — Purge solenoid valve terminal A (harness-side) and power supply

End Of Ste

F4

EGR VALVE INSPECTION

AME421620300W01

Resistance Inspection

Note
- Perform the following test only when directed.

1. Disconnect the negative battery cable.
2. Inspect resistance of the EGR valve coils.
   - If not as specified, replace the EGR valve.
   - If as specified, carry out the “Circuit Open/ Short Inspection”.

Terminals	Resistance (ohms)
C—E C—A D—B D—F	Approx. 22

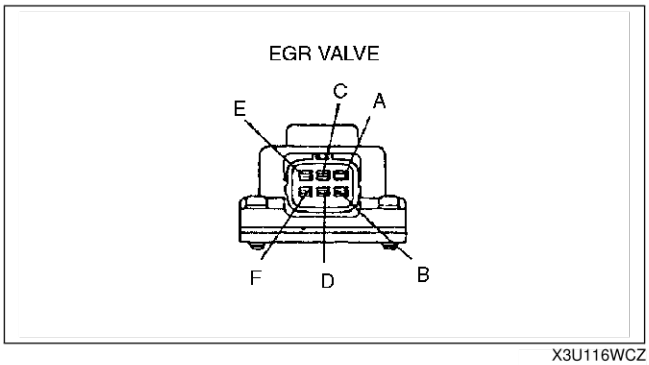

X3U116WCZ

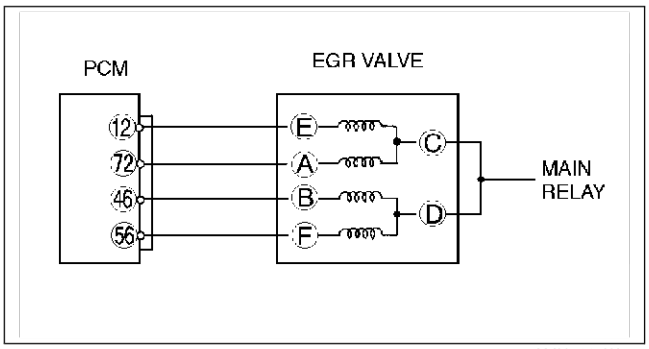

AMU0116W003

Circuit Open/Short Inspection

1. Disconnect the PCM connector. (See F4–90 PCM REMOVAL/INSTALLATION.)
2. Inspect the following wiring harness for open or short (Continuity check).

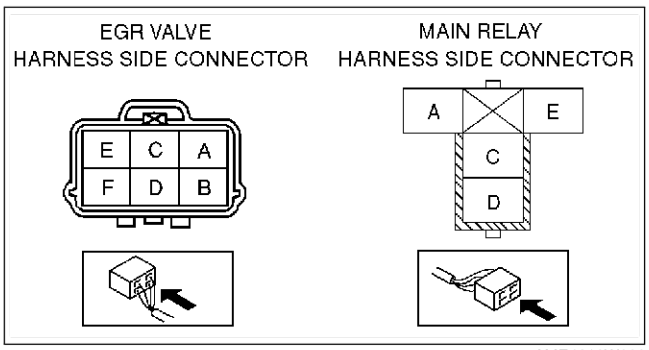

AME4216W009

Open circuit
- If there is no continuity, the circuit is open. Repair or replace the harness.
  - — EGR valve terminal E (harness-side) and PCM terminal 12
  - — EGR valve terminal A (harness-side) and PCM terminal 72
  - — EGR valve terminal B (harness-side) and PCM terminal 46
  - — EGR valve terminal F (harness-side) and PCM terminal 56
  - — EGR valve terminal C or D (harness-side) and main relay terminal D (harness-side)

Short circuit
- If there is continuity, the circuit is shorted. Repair or replace the harness.
  - — EGR valve terminal E (harness-side) and GND
  - — EGR valve terminal A (harness-side) and GND
  - — EGR valve terminal B (harness-side) and GND
  - — EGR valve terminal F (harness-side) and GND
  - — EGR valve terminal C or D (harness-side) and power supply

3. Remove the EGR valve, and inspect for any damage or clogging.
   - If there is no damage or no clogging, replace the EGR valve.

End Of Sec

EGR BOOST SENSOR SOLENOID VALVE INSPECTION

AME421618742W01

Airflow Inspection

Note
- Perform the following test only when directed.

1. Disconnect the negative battery cable.
2. Remove the EGR boost sensor solenoid valve.
3. Inspect airflow between each port under the following conditions.
   - If not as specified, replace the EGR boost sensor solenoid valve.
   - If as specified, carry out the “Circuit Open/ Short Inspection”.

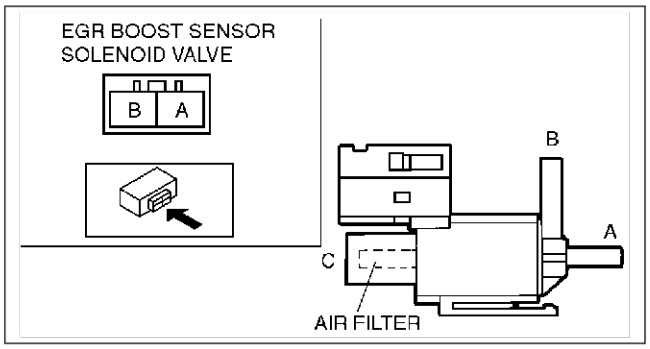

AME4216W010

○—○ : Continuity ○═○ : Airflow

Step	Terminal		Port		
	A	B	A	B	C
1	○—○			○═○	
2	B+	GND	○═○		

AME4216W013

Circuit Open/Short Inspection

1. Disconnect the PCM connector. (See F4–90 PCM REMOVAL/INSTALLATION.)
2. Inspect the following wiring harness for open or short (Continuity check).

Open circuit
- If there is no continuity, the circuit is open. Repair or replace the harness.
  - — EGR boost sensor solenoid valve terminal B (harness-side) and PCM terminal 47
  - — EGR boost sensor solenoid valve terminal A (harness-side) and main relay terminal D (harness-side)

Short circuit
- If there is continuity, the circuit is shorted. Repair or replace the harness.
  - — EGR boost sensor solenoid valve terminal B (harness-side) and body GND
  - — EGR boost sensor solenoid valve terminal A (harness-side) and power supply

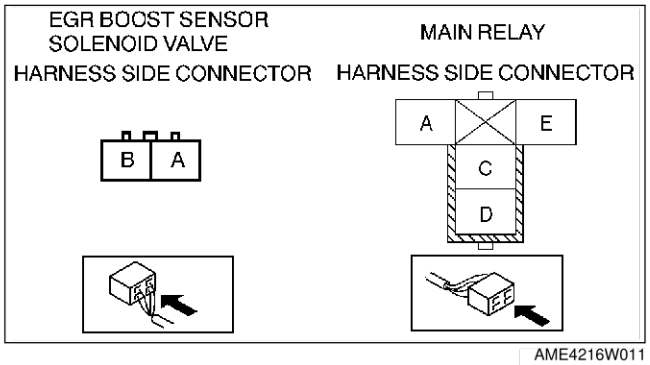

AME4216W011

End Of Sta

PCV VALVE INSPECTION

AME421613890W01

1. Disconnect the negative battery cable.
2. Remove the intake manifold.(see F4–60 INTAKE-AIR SYSTEM REMOVAL/INSTALLATION.)
3. Remove the PCV valve.
4. Blow through the valve and verify that air flows as specified.
   - If not as specified, replace the PCV valve.

Specification

Condition	Airflow
Air applied from port A to B	Yes
Air applied from port B or A	No

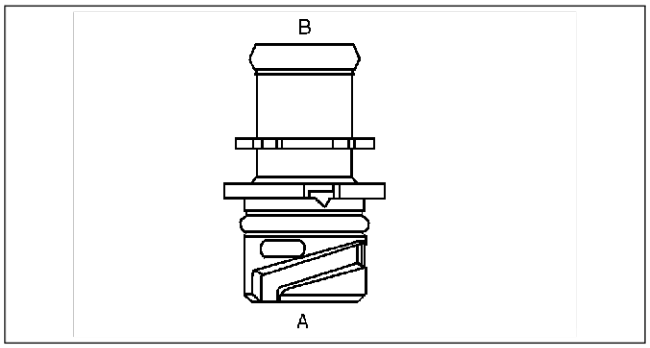

AMU0116W020

End Of Sta

WARM-UP THREE-WAY CATALYTIC CONVERTER (WU-TWC) INSPECTION (EUROPEAN (L.H.D.) SPECS)

AME421620500W01

Note
- Make sure that no HO2S DTCs have been detected. If detected, this inspection is not applicable for TWC inspection.

1. Connect the WDS or equivalent and monitor PIDs as following.
   - Monitor the left WU-TWC using O2S21 PID for upstream HO2S and O2S22 PID for downstream HO2S.
   - Monitor the right WU-TWC using O2S11 PID for upstream HO2S and O2S12 PID for downstream HO2S.
2. Begin to monitor the appropriate PIDs.
3. Drive the vehicle for **10 min** at **65—96 km/h {40—60 mph}** to allow the front catalytic converter to reach operating temperature.
4. Stop the vehicle and leave it in a safe place.
5. Let the engine idle.
6. Record PIDs for **1 min**.
7. Select the appropriate PIDs and read the graph.
8. Count the number of times (inversions) that the upstream HO2S graph line actually crosses the **0.5 V** line.
9. Count the number of times (inversions) that the downstream HO2S graph line actually crosses the **0.5 V** line.

Note
- Do not count the number of peaks. Refer to the graph.

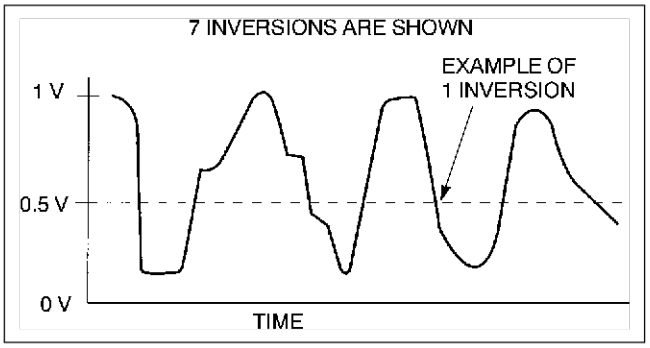

YLU116WAE

10. Using the following equation, calculate the value of ratio.

Equation
RATIO = Upstream HO2S inversion ÷ downstream HO2S inversion

- If the ratio is **2 or more** or there is no downstream HO2S inversion, the WU-TWC is functioning properly.
- If the ratio is **less than 2**, the WU-TWC is not functioning properly. Replace the WU-TWC.

Upstream HO2S graph line example

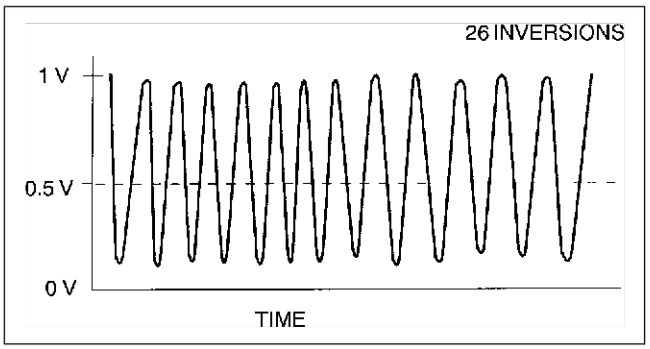

YMU116WAE

Downstream HO2S graph line example 1

Equation
RATIO = 26 inversions (upstream HO2S inversions) ÷ 7 inversions (downstream HO2S inversions) = 3.7 (good WU-TWC)

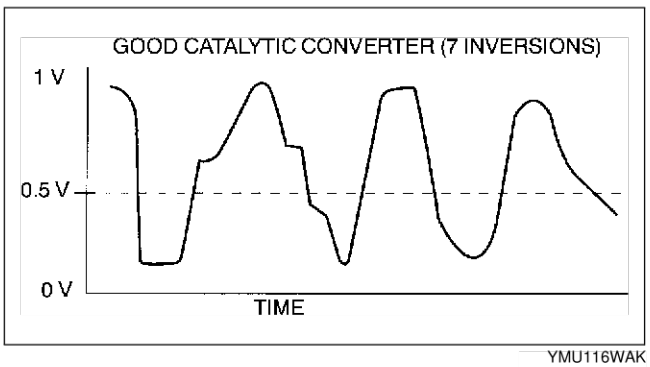

YMU116WAK

Downstream HO2S graph line example 2

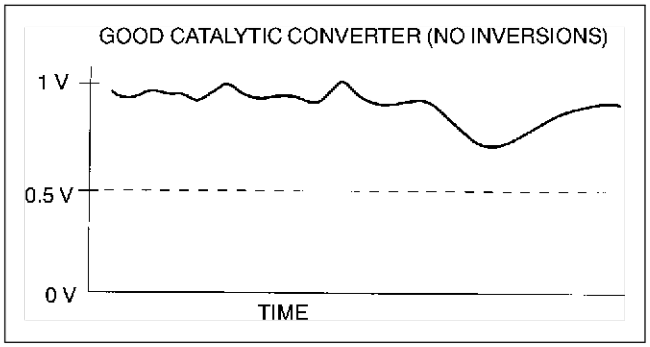

YMU116WAG

Downstream HO2S graph line example 3

Equation
RATIO = 26 inversions (upstream HO2S inversions) ÷ 19 inversions (downstream HO2S inversions) = 1.4 (deteriorated WU-TWC)

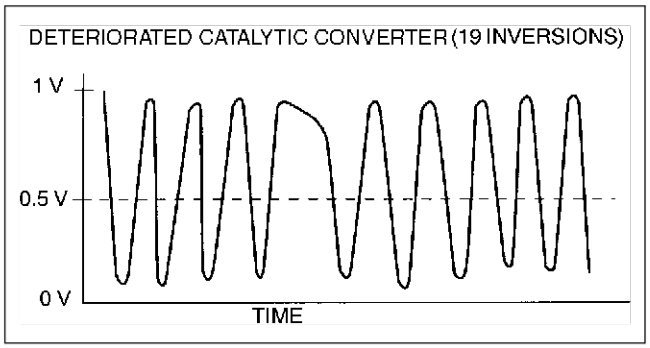

ZLU116WAG

End Of Ste

F4

CONTROL SYSTEM

PCM REMOVAL/INSTALLATION

AME424018880W14

1. Disconnect the negative battery cable.
2. Remove the TCM.
3. Remove in the order indicated in the table.
4. Install in the reverse order of removal.

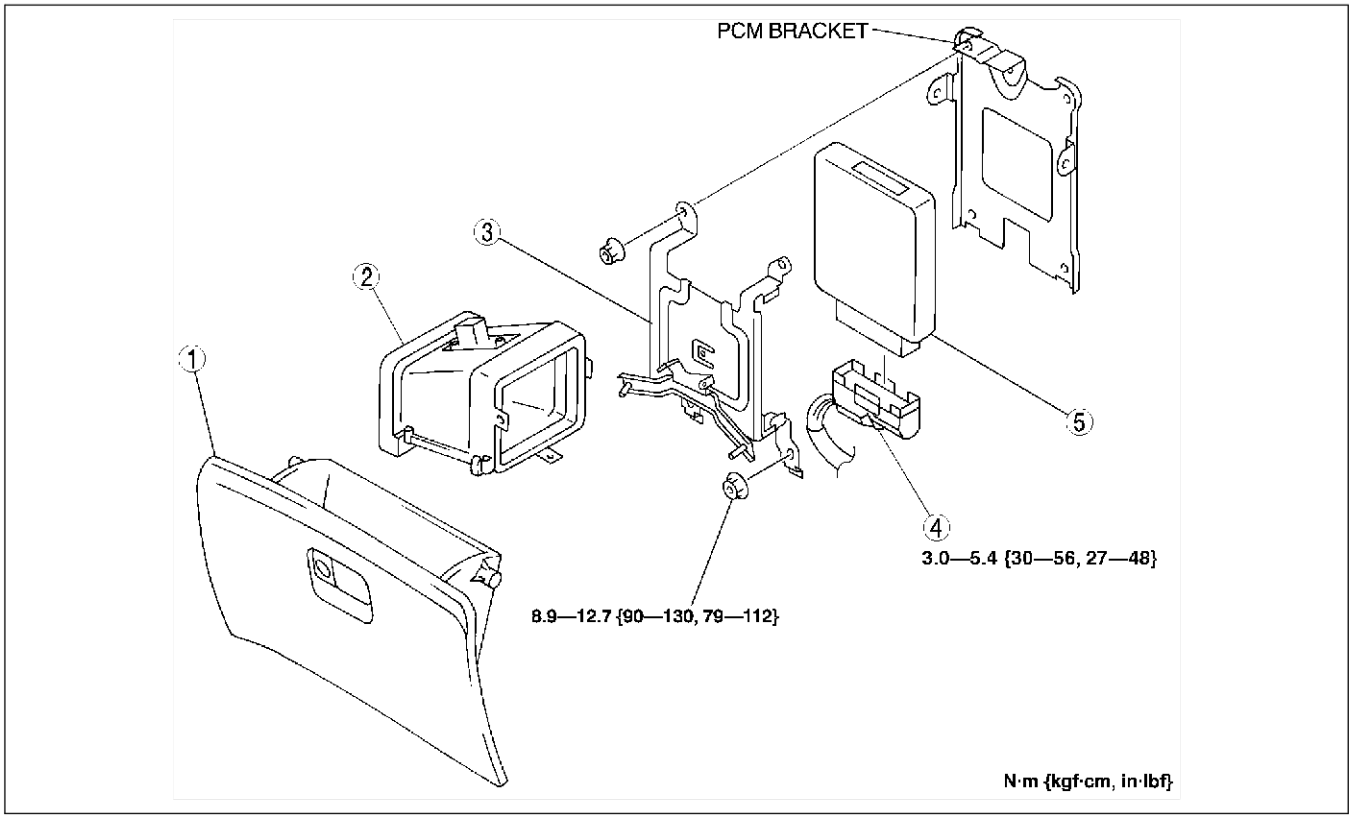

AMU0140W115

1	Glove compartment
2	Air duct (See F4–90 Air Duct Removal Note)

3	PCM panel (See F4–91 PCM Panel Removal Note)
4	PCM connector
5	PCM

Air Duct Removal Note

1. Disconnect the front blower resistor connector.
2. Remove the air duct stay fastener.
3. Slide the air duct to the right.
4. Tilt the left side down to remove the air duct from the installation place.

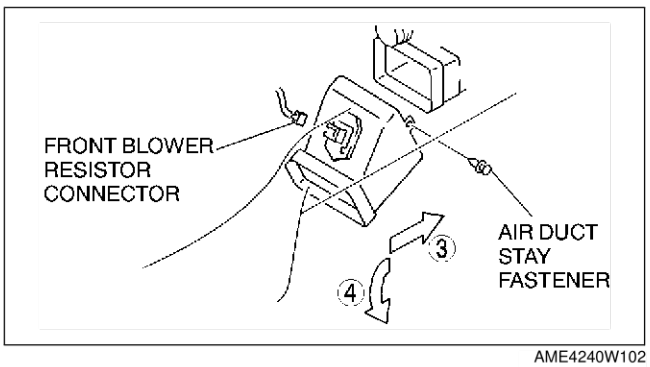

AME4240W102

PCM Panel Removal Note

1. Before removing the PCM panel, pull the PCM connector harness stay fastener out from the PCM panel.
2. Remove the upper right side of the PCM panel installation nut located at the back of the blower unit as shown.
3. Remove the lower side of the PCM panel installation nuts located at the bottom of the cabin carpet.

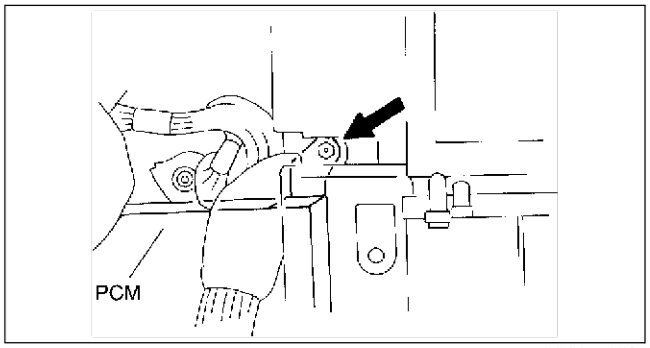

YMU140WC1

4. Remove four installation nuts, then pull the PCM panel down to remove from installation place.

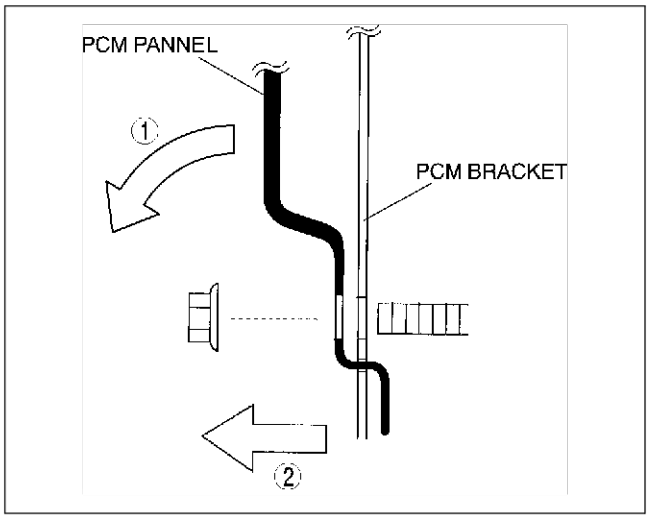

AMU0140W131

End Of Ste

PCM INSPECTION

AME424018880W15

Caution

- **The PCM terminal voltages vary with measuring conditions and vehicle conditions. Always carry out a total inspection of the input systems, output systems, and PCM to determine the cause of trouble. Otherwise, diagnosis will be incorrect.**

PCM Inspection Using the SST (WDS or equivalent)

Note

- PIDs for the following parts are not available on this model. Go to the appropriate part inspection page.
  - — CMP sensor (See F4–102 CAMSHAFT POSITION (CMP) SENSOR INSPECTION.)
  - — Main relay (See T–28 RELAY INSPECTION.)

1. Connect the WDS or equivalent to the DLC-2. (See F4–109 ON-BOARD DIAGNOSTIC TEST.)
2. Turn the ignition switch to ON.
3. Measure the value.
   - If the value is not within the specification, follow the instructions in Action column.

PID/DATA MONITOR table (Reference)

PID/DATA MONITOR item	Unit/ Condition	Condition/Specification (Reference)	Action	PCM terminal
ACCS (A/C relay)	ON/OFF	A/C operating: ON Ignition switch ON: OFF	Inspect following PIDs: RPM, TP, ECT, ACSW	69
ACSW (A/C switch)	ON/OFF	A/C switch and fan switch ON: ON A/C switch OFF: OFF	Inspect A/C switch	41
ALTF (Generator field coil control duty value)	%	Ignition switch ON: 0% Idle: 0—100% Generator operating → E/L ON: Duty value rises	Inspect following PIDs: IAT, RPM, VPWR, ALTT V	53
ALTT V (Generator output voltage)	V	Ignition switch ON: 0 V Idle: 14—16 V	Inspect following PIDs: IAT, RPM, VPWR, ALTF Inspect generator (See G–13 GENERATOR INSPECTION.)	30
ARPMDES (Target engine speed)	rpm	Idle (No load): 700—800 rpm	Perform “ON-BOARD DIAGNOSTIC TEST” (See F4–109 ON-BOARD DIAGNOSTIC TEST.)	—
BARO (Barometric pressure)	kPa or Hg	Less than 400 m {1.13 ft} above sea level: 99—103 kPa {743—772 mmHg, 29.3—30.4 inHg}	Inspect BARO sensor/EGR boost sensor (See F4–104 BAROMETRIC PRESSURE SENSOR/EGR BOOST SENSOR INSPECTION.)	—
	V	Less than 400 m {1.13 ft} above sea level: 4.1—4.3 V	Inspect BARO sensor/EGR boost sensor (See F4–104 BAROMETRIC PRESSURE SENSOR/EGR BOOST SENSOR INSPECTION.)	34
BOO (Brake switch)	ON/OFF	Brake pedal depressed: ON Brake pedal released: OFF	Inspect brake switch	92
CHRGLP (Generator warning light)	ON/OFF	Ignition switch ON: ON Idle: OFF	Inspect generator warning light	98
ECT (Engine coolant temperature)	°C or °F	ECT 20 °C {68 °F}: 20 °C {68 °F} ECT 60 °C {140 °F}: 60 °C {140 °F}	Inspect ECT sensor (See F4–100 ENGINE COOLANT TEMPERATURE (ECT) SENSOR INSPECTION.)	—
	V	ECT 20 °C {68 °F}: 2.9—3.1 V After warm up: 0.2—1.0 V	Inspect ECT sensor (See F4–100 ENGINE COOLANT TEMPERATURE (ECT) SENSOR INSPECTION.)	38
EGRCHK *4(EGR boost sensor solenoid valve)	ON/OFF	Ignition switch ON: OFF Idle: OFF	Perform EGR boost sensor solenoid valve inspection. (See F4–87 EGR BOOST SENSOR SOLENOID VALVE INSPECTION.)	47
EVAPCP (Purge solenoid valve duty value)	%	Ignition switch ON: 0%	Inspect following PIDs: IAT, RPM, ECT, MAF, TP, BARO, O2S11, O2S21, VPWR	18
FAN DUTY (Fan control signal)	%	ECT below 100 °C {212 °F}: 0% ECT above 100 °C {212 °F}: 35—100%	Inspect ECT sensor (See F4–100 ENGINE COOLANT TEMPERATURE (ECT) SENSOR INSPECTION.)	44
FP (Fuel pump relay)	ON/OFF	Ignition switch ON: OFF Idle: ON Cranking: ON	Inspect following PID: RPM	80*2, 104*1
FUELPW1 (Fuel injection duration)	MS	Ignition switch ON: 0 ms Idle: 1.5—3.0 ms	Verify PIDs for input signals.	74, 75, 101
FUELPW2 (Fuel injection duration)	MS	Ignition switch ON: 0 ms Idle: 1.5—3.0 ms	Verify PIDs for input signals.	73, 99, 100

PID/DATA MONITOR item	Unit/ Condition	Condition/Specification (Reference)	Action	PCM terminal
HTR11 (HO2S heater (Front, RH))	ON/OFF	Ignition switch ON (engine stopped): OFF Specified period after engine start with ECT 0—40 °C {32—104 °F}: ON Others alternate: ON and OFF	Inspect following PIDs: ECT, MAF	93
HTR12 (HO2S heater (Front, LH))	ON/OFF	Ignition switch ON (engine stopped): OFF Specified period after engine start with ECT 0—40 °C {32—104 °F}: ON Others alternate: ON and OFF	Inspect following PIDs: ECT, MAF	95
HTR21*3 (HO2S heater (Rear, RH))	ON/OFF	Idle: ON RHO2S heater malfunctioning: OFF	Inspect following PIDs: ECT, MAF	94
HTR22*3 (HO2S heater (Rear, LH))	ON/OFF	Idle: ON RHO2S heater malfunctioning: OFF	Inspect following PIDs: ECT, MAF	96
IAC (IAC valve)	%	Ignition switch ON: 0% Idle: 25—40%	Inspect following PIDs: IAT, RPM, ECT, MAF, TP, PNP, PSP, ACSW, TEST	54, 83
IAT (Intake air temperature)	°C or °F	IAT 20 °C {68 °F}: 20 °C {68 °F}	Inspect IAT sensor (See F4–96 MASS AIR FLOW (MAF)/INTAKE AIR TEMPERATURE (IAT) SENSOR INSPECTION.)	—
	V	IAT 20 °C {68 °F}: 2.3—2.5 V IAT 30 °C {86 °F}: 1.8—2.0 V	Inspect IAT sensor (See F4–96 MASS AIR FLOW (MAF)/INTAKE AIR TEMPERATURE (IAT) SENSOR INSPECTION.)	39
IMCC (IMCC control)	%	Engine speed below 3,750 rpm or above 5,560 rpm: 0% Engine speed 3,750—5,560 rpm: 100%	Inspect following PID: RPM	28
KNOCKR (Spark retard value to prevent knocking)	DEG	Idling: 0 °	Verify PIDs for input signals.	4, 57
LOAD (Calculated engine load)	%	Idle: 18—20% Engine speed at 2,500 rpm: 17—19%	Perform “ON-BOARD DIAGNOSTIC TEST” (See F4–109 ON-BOARD DIAGNOSTIC TEST.)	—
LONGFT1 (Current long fuel trim (RH) adjustment)	%	Idle: –20—20%	Perform “ON-BOARD DIAGNOSTIC TEST” (See F4–109 ON-BOARD DIAGNOSTIC TEST.)	—
LONGFT2 (Current long fuel trim (LH) adjustment)	%	Idle: –20—20%	Perform “ON-BOARD DIAGNOSTIC TEST” (See F4–109 ON-BOARD DIAGNOSTIC TEST.)	—
MAF (Intake MAF)	g/s	Idle:3.3—4.7 g/s Engine speed at 2,500 rpm: 12.1—15.0 g/s	Inspect MAF sensor (See F4–96 MASS AIR FLOW (MAF)/INTAKE AIR TEMPERATURE (IAT) SENSOR INSPECTION.)	—
	V	Ignition switch ON: 0.0—0.1 V Idle: 0.5—0.8 V	Inspect MAF sensor (See F4–96 MASS AIR FLOW (MAF)/INTAKE AIR TEMPERATURE (IAT) SENSOR INSPECTION.)	88
MIL (Malfunction indicator light)	ON/OFF	Ignition switch ON: ON DTC output: ON No DTC output: OFF	Inspect MIL	2

PID/DATA MONITOR item	Unit/ Condition	Condition/Specification (Reference)	Action	PCM terminal
O2S11 (HO2S (Front, RH))	V	Ignition switch ON: 0—1.0 V Idle (After warm up): 0—1.0 V Acceleration: 0.5—1.0 V Deceleration: 0—0.5 V	Inspect HO2S (Front, LH) (See F4–105 HEATED OXYGEN SENSOR (HO2S) INSPECTION.)	60
O2S12 (HO2S (Front, LH))	V	Ignition switch ON: 0—1.0 V Idle (After warm up): 0—1.0 V Acceleration: 0.5—1.0 V Deceleration: 0—0.5 V	Inspect HO2S (Front, RH) (See F4–105 HEATED OXYGEN SENSOR (HO2S) INSPECTION.)	35
O2S21*3 (HO2S (Rear, RH))	V	Ignition switch ON: 0—1.0 V After warm up: 0—1.0 V Acceleration: 0.5—1.0 V Deceleration: 0—0.5 V	Inspect HO2S (Rear, LH) (See F4–105 HEATED OXYGEN SENSOR (HO2S) INSPECTION.)	87
O2S22*3 (HO2S (Rear, LH))	V	Ignition switch ON: 0—1.0 V After warms up: 0—1.0 V Acceleration: 0.5—1.0 V Deceleration: 0—0.5 V	Inspect HO2S (Rear, RH) (See F4–105 HEATED OXYGEN SENSOR (HO2S) INSPECTION.)	61
PNP (TR switch)	ON/OFF	P or N range: ON Others: OFF	Inspect TR switch (See K2–76 TRANSAXLE RANGE (TR) SWITCH INSPECTION.)	64
PSP (PSP switch)	ON/OFF	Steering wheel at straight ahead position: OFF Steering wheel fully turned: ON	Inspect PSP switch (See F4–107 POWER STEERING PRESSURE (PSP) SWITCH INSPECTION.)	31
RFCFLAG (Readiness Function Code)	ON/OFF	RFC exists: ON No RFC: OFF	Perform DRIVE MODE 1 (See F4–110 OBD DRIVE MODE.)	—
RPM (Engine speed)	rpm	Idle (No load): 700—800 rpm	Inspect CKP sensor (See F4–101 CRANKSHAFT POSITION (CKP) SENSOR INSPECTION.)	21, 22
SEGRP (EGR valve (stepping motor) position)	No. of step	Ignition switch ON: 0 step Idle: 0 step Cranking: 0—60 steps	Inspect following PIDs: ECT, TP	12, 46, 56, 72
SHRTFT1	%	Idle: –20—20%	Perform “ON-BOARD DIAGNOSTIC TEST” (See F4–109 ON-BOARD DIAGNOSTIC TEST.)	—
SHRTFT2	%	Idle: –20—20%	Perform “ON-BOARD DIAGNOSTIC TEST” (See F4–109 ON-BOARD DIAGNOSTIC TEST.)	—
SPARKADV (Ignition timing)	BTC	Ignition switch ON: 0° Idle: BTDC 4—16°	Inspect following PIDs: MAF V, IAT V, RPM, TP V, ECT V, PSP SW, NL SW, CLT SW, A/C SW, TEN, CMP Perform Engine tune-up. (See F4–58 IGNITION TIMING INSPECTION.)	26 for #1, 1 for #2 52 for #3, 27 for #4 78 for #5, 82 for #6
TEST (TEN terminal (DLC))	ON/OFF	Open terminal TEN: OFF Short terminal TEN: ON	Inspect DLC TEN terminal and PCM connector terminal 5	5
TP (TP sensor signal voltage)	V	CTP: 0.7—1.2 V WOT: 4.0—5.0 V	Inspect TP sensor (See F4–99 THROTTLE POSITION (TP) SENSOR INSPECTION.)	89
TSS (Input/turbine speed signal)	rpm	Ignition switch ON: 0 rpm Idle: 700—800 rpm	Inspect input/turbine speed sensor (See K2–81 INPUT/TURBINE SPEED SENSOR INSPECTION.)	—

PID/DATA MONITOR item	Unit/ Condition	Condition/Specification (Reference)	Action	PCM terminal
VPWR (Battery positive voltage)	V	Ignition switch ON: B+ Ignition switch OFF: 0V	Inspect main relay (See T–28 RELAY INSPECTION.) Inspect battery (See G–10 BATTERY INSPECTION.)	55
VSS (Vehicle speed)	KPH or MPH	Vehicle speed 20 km/h {12 mph}: 20 km/h {12 mph} Vehicle speed 40 km/h {25 mph}: 40 km/h {25 mph}	Inspect VSS	58

*1 : Immobilizer system equipped
*2 : Immobilizer system not equipped
*3 : European (L.H.D.) specs.
*4 : Australian, General (L.H.D. R.H.D.) specs.

Freeze Frame Data Monitor Table
Freeze frame data when DTC is set

- Retrieve the following FFD, excluding FDMTIME, FDMIAT, FDMECTS and FDMTP. Retrieve the FFD for FDMTIME, FDMIAT, FDMECTS and FDMTP from PID/DATA MONITOR & RECORD.

Note

- FFD is a snapshot of the conditions that are present when DTC or PENDING CODE is stored. Once FFD is stored, this data will remain in PCM memory even if another emission related DTC or PENDING CODE is stored additionally, except for Misfire or Fuel System related DTC or PENDING CODE. Once Misfire or Fuel System related DTC or PENDING CODE is stored, it will overwrite any previous data and the FFD will not be further overwritten. When DTC associated with the FFD is erased or PCM is reset, new FFD can be stored.

PID	Definition	Unit/Condition
LOAD	Calculated engine load	%
ECT	Engine coolant temperature when DTC is stored	°C/°F
LONGFT1	Current bank 1 fuel trim adjustment (learning correction value)	%
LONGFT2	Current bank 2 fuel trim adjustment (learning correction value)	%
RPM	Engine speed	RPM
SHRTFT1	Current bank 1 fuel trim adjustment	%
SHRTFT2	Current bank 2 fuel trim adjustment	%
VSS	Vehicle speed	KPH/MPH
FDMECTS	Engine coolant temperature recorded when the engine is started.	°C/°F
FDMIAT	Intake air temperature	°C/°F
FDMTIME	Time recorded between engine start and DTC is stored.	SEC.
FDMTP	Throttle opening angle	%

Freeze frame data when pending code is set

- Retrieve the following FFD from PID/DATA MONITOR & RECORD.

Note

- The data will remain in the memory even if another emission-related DTC is stored, including the Misfire and Fuel System Monitor DTCs.

PID	Definition	Unit/Condition
FDPDTC	Pending code	Pending code
FDPECT	Engine coolant temperature when PENDING CODE is stored.	°C/°F
FDPECTS	Engine coolant temperature recorded when the engine is started	°C/°F
FDPFS1	Fuel system feedback control status (right bank)	OPEN/CLOSE
FDPFS2	Fuel system feedback control system (left bank)	OPEN/CLOSE
FDPIAT	Intake air temperature	°C/°F
FDPLFT1	Current bank 1 fuel trim adjustment (learning correction value)	%
FDPLFT2	Current bank 2 fuel trim adjustment (learning correction value)	%
FDPLOAD	Calculated engine load	%
FDPRPM	Engine speed	RPM
FDPSFT1	Current bank 1 fuel trim adjustment	%
FDPSFT2	Current bank 2 fuel trim adjustment	%
FDPTIME	Time recorded between engine start and PENDING CODE is stored	SEC.
FDPTP	Throttle opening angle	%
FDPVS	Vehicle speed	KPH/MPH

End Of Sie

MASS AIR FLOW (MAF)/INTAKE AIR TEMPERATURE (IAT) SENSOR INSPECTION

AME424013210W01

Note

- Perform the following test only when directed.

MAF Sensor Voltage Inspection

1. Turn the ignition switch to LOCK.
2. Connect the **SSTs** (WDS or equivalent) to the DLC-2.
3. Turn the ignition switch to ON (Engine OFF).
4. Select MAF PID on the **SSTs** (WDS or equivalent).
5. Verify that MAF PID is within the specification.
   - If not as specified, perform the “MAF Sensor Circuit Open/Short Inspection”.

Specification
0.0—0.1 V

6. Turn the ignition switch to START and warm up the engine completely.
7. Verify that MAF PID is within the specification.
   - If not as specified, perform the “MAF Sensor Circuit Open/Short Inspection”.

Specification
0.5—0.8 V

MAF Sensor Circuit Open/Short Inspection

1. Disconnect the PCM connector. (See F4–90 PCM REMOVAL/INSTALLATION.)
2. Inspect the following wiring harness for open or short (Continuity check).

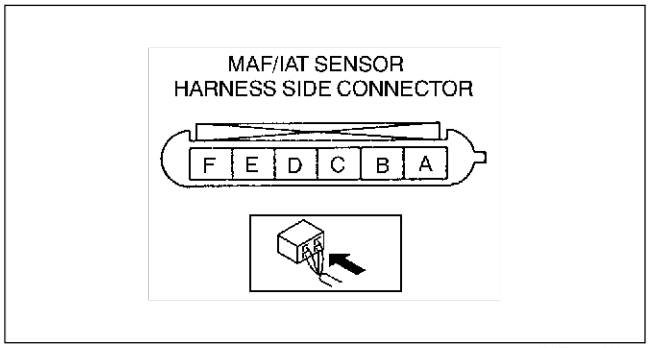

AME4240W201

Open circuit

- If there is no continuity, the circuit is open. Repair or replace the harness.
  - — MAF/IAT sensor terminal B (harness-side) and main relay terminal C (harness-side)
  - — MAF/IAT sensor terminal E (harness-side) and PCM terminal 88
  - — MAF/IAT sensor terminal D (harness-side) and PCM terminal 36

Short circuit

- If there is continuity, the circuit is shorted. Repair or replace the harness.
  - — MAF/IAT sensor terminal B (harness-side) and body ground
  - — MAF/IAT sensor terminal E (harness-side) and power supply
  - — MAF/IAT sensor terminal E (harness-side) and body ground
  - — MAF/IAT sensor terminal D (harness-side) and power supply

MAF Rate and Load Value

Note

- The scan tool shows the MAF rate and load value.

Specification

item	Intake MAF (g/s)	Engine load calculated value (%)
Idle*1	3.3—4.7	18—20
Engine speed 2,500 rpm*2	12.1—15.0	17—19

*1 : 700—800 rpm
*2 : No load, N position or P position

F4

IAT Sensor Resistance Inspection

1. Disconnect the MAF/IAT sensor connector.
2. Measure the resistance between MAF/IAT sensor terminals A and F using an ohmmeter.
   - If not as specified, replace the MAF/IAT sensor.
   - If the IAT sensor is okay, but the IAT PID is out of specification, perform the “IAT Sensor Circuit Open/Short Inspection”.

Specification

Ambient temperature (°C {°F})	Resistance (kilohms)
10 {50}	3.3—4.1
20 {68}	2.2—2.7
30 {86}	1.4—1.9

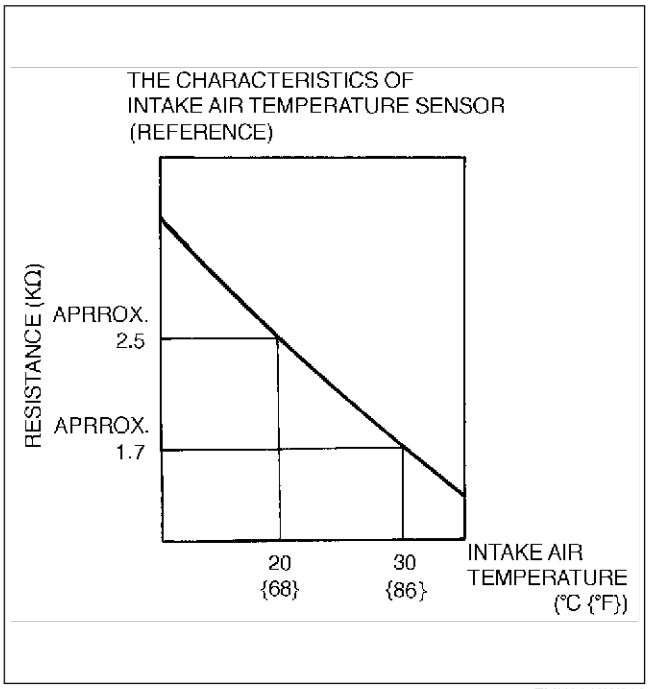

ZMU0140W010

IAT Sensor Circuit Open/Short Inspection

1. Disconnect the PCM connector. (See F4–90 PCM REMOVAL/INSTALLATION.)
2. Inspect the following wiring harness for open or short (Continuity check).

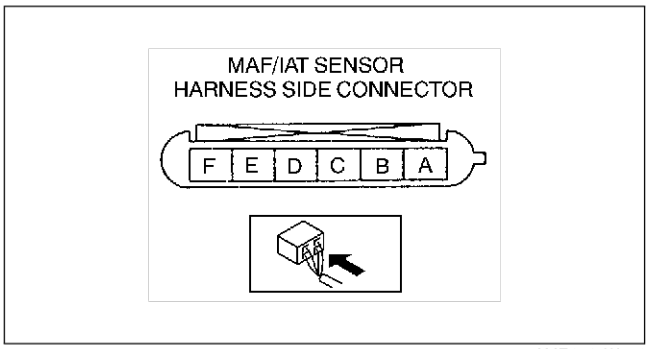

AME4240W201

Open circuit

- If there is no continuity, the circuit is open. Repair or replace the harness.
  - — MAF/IAT sensor terminal A (harness-side) and PCM terminal 91
  - — MAF/IAT sensor terminal F (harness-side) and PCM terminal 39

Short circuit

- If there is continuity, the circuit is shorted. Repair or replace the harness.
  - — MAF/IAT sensor terminal A (harness-side) and power supply
  - — MAF/IAT sensor terminal F (harness-side) and power supply
  - — MAF/IAT sensor terminal F (harness-side) and body ground

End Of Sec

THROTTLE POSITION (TP) SENSOR INSPECTION

AME424018910W01

Note
- Perform the following test only when directed.

Resistance Inspection

1. Verify that the throttle valve is at CTP.
2. Inspect accelerator cable free play. (See F4–64 ACCELERATOR CABLE INSPECTION.)
3. Verify that resistance between TP sensor terminals A and B changes smoothly while throttle valve is gradually opened.
   - If okay, go to next step.
   - If not okay, replace the TP sensor.
4. Measure the resistance between TP sensor terminals A and C using an ohmmeter.
   - If not as specified, replace the TP sensor.
   - If as specified, but PID value or PCM terminal 89 voltage are out of specification, perform the “Circuit Open/Short Inspection”.

Specification
3.2—4.8 kilohms

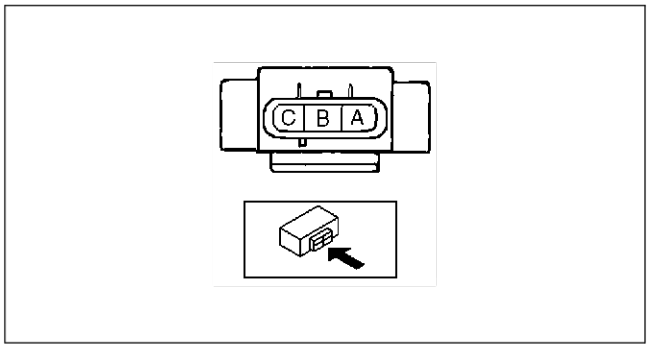

AME4240W203

F4

Circuit Open/Short Inspection

1. Disconnect the PCM connector. (See F4–90 PCM REMOVAL/INSTALLATION.)
2. Check the following wiring harness for open or short (Continuity check).

Open circuit
- If there is no continuity, the circuit is open. Repair or replace the harness.
  - — TP sensor terminal A (harness-side) and PCM terminal 91
  - — TP sensor terminal B (harness-side) and PCM terminal 89
  - — TP sensor terminal C (harness-side) and PCM terminal 90

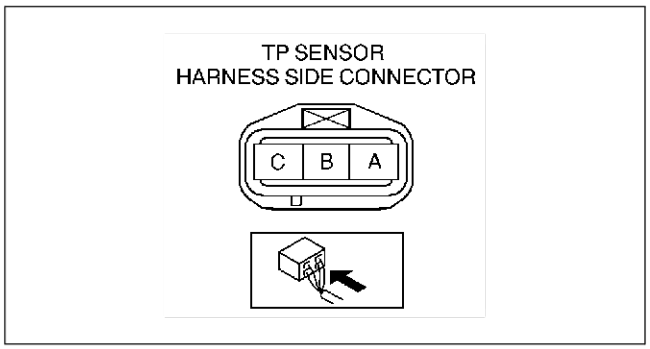

AME4240W204

Short circuit
- If there is continuity, the circuit is shorted. Repair or replace the harness.
  - — TP sensor terminal A (harness-side) and power supply
  - — TP sensor terminal B (harness-side) and power supply
  - — TP sensor terminal B (harness-side) and body ground
  - — TP sensor terminal C (harness-side) and power supply
  - — TP sensor terminal C (harness-side) and body ground

End Of Sie

THROTTLE POSITION (TP) SENSOR REMOVAL/INSTALLATION

AME424018910W02

1. Disconnect the TP sensor connector.
2. Remove the TP sensor attaching screws.
3. Remove the TP sensor from the throttle body.
4. Verify that the throttle valve is fully closed.
5. Install the TP sensor to the throttle body.
6. Adjust the TP sensor.
7. Tighten the TP sensor attaching screws.

Tightening torque
3.0 N·m {31 kgf·cm, 27 in·lbf}

8. Verify that the throttle valve moves smoothly.
9. Reconnect the TP sensor connector.

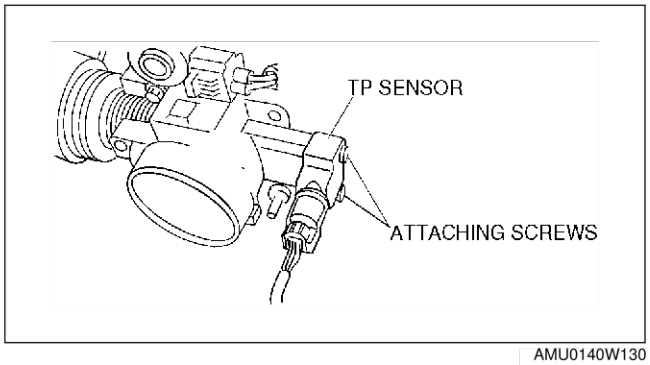

AMU0140W130

End Of Sie

ENGINE COOLANT TEMPERATURE (ECT) SENSOR INSPECTION

AME424018840W01

Note
- Perform the following test only when directed.

Resistance Inspection

1. Drain the engine coolant.
2. Remove the ECT sensor.
3. Place the ECT sensor in water with a thermometer, and heat the water gradually.
4. Measure the resistance between the ECT sensor terminals using an ohmmeter.
   - If not as specified, replace the ECT sensor.
   - If the ECT sensor is okay, but PID value or PCM terminal 38 voltage are out of specification, perform the “Circuit Open/Short Inspection”.

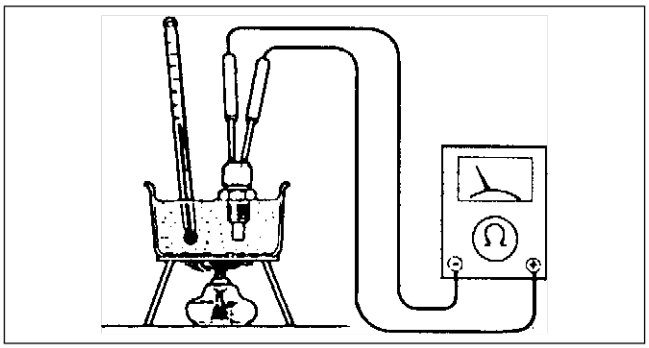

YMU140WAC

Specification

Water temperature (°C {°F})	Resistance (kilohms)
20 {68}	2.2—2.8
80 {176}	0.29—0.4

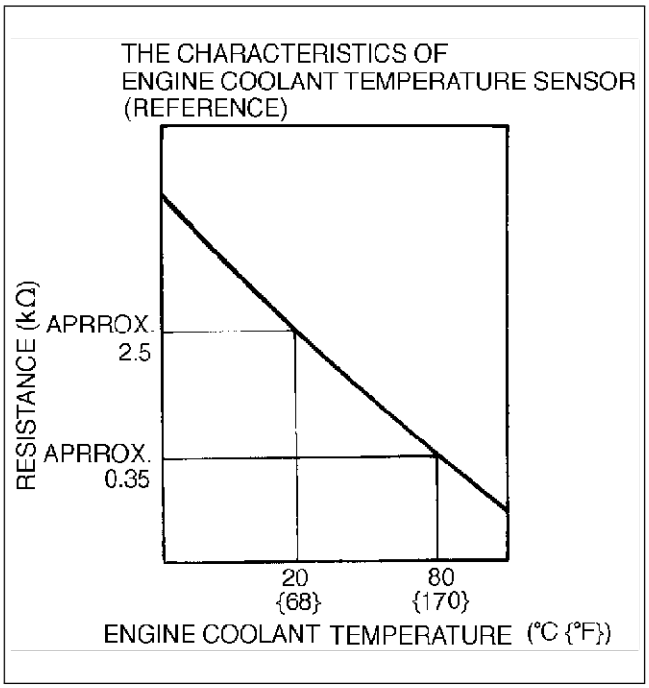

ZMU0140W011

Circuit Open/Short Inspection

1. Disconnect the PCM connector. (See F4–90 PCM REMOVAL/INSTALLATION.)
2. Inspect the following wiring harness for open or short (Continuity check).

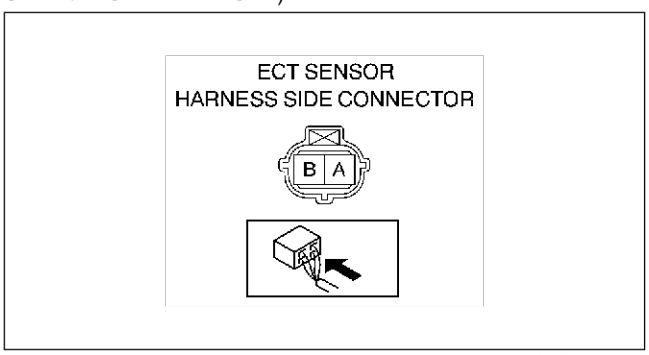

AME4240W205

Open circuit
- If there is no continuity, the circuit is open. Repair or replace the harness.
  - — ECT sensor terminal A (harness-side) and PCM terminal 38
  - — ECT sensor terminal B (harness-side) and PCM terminal 91

Short circuit
- If there is continuity, the circuit is shorted. Repair or replace the harness.
  - — ECT sensor terminal A (harness-side) and power supply
  - — ECT sensor terminal A (harness-side) and body ground
  - — ECT sensor terminal B (harness-side) and power supply

ENGINE COOLANT TEMPERATURE (ECT) SENSOR REMOVAL/INSTALLATION

AME424018840W02

1. Drain the engine coolant.
2. Disconnect the ECT sensor connector.

Warning
- **When the engine is hot, it can badly burn. Turn off the engine and wait until it is cool before removing the ECT sensor.**

3. Remove the ECT sensor.
4. Replace the gasket.
5. Install in the reverse order of removal.
6. Refill the engine coolant.

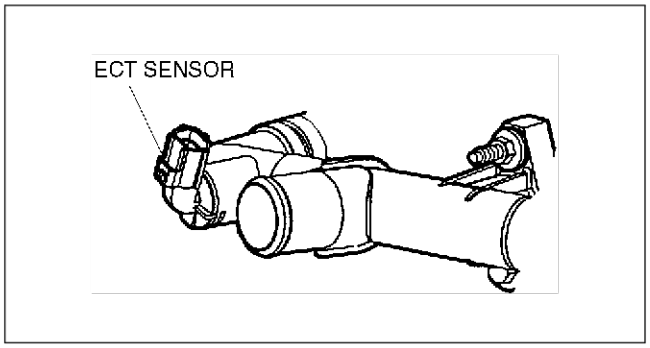

AMU0140W112

End Of Sta

CRANKSHAFT POSITION (CKP) SENSOR INSPECTION

AME424018230W01

Resistance Inspection

1. Disconnect the CKP sensor connector.
2. Measure the resistance between CKP sensor terminals A and B using an ohmmeter.
   - If not as specified, replace the CKP sensor.
   - If CKP sensor resistance is okay, but PID value or PCM terminals 21 and 22 voltages are out of specification, perform the “Circuit Open/Short Inspection”.

Specification
315—385 ohms

Circuit Open/Short Inspection

1. Disconnect the PCM connector. (See F4–90 PCM REMOVAL/INSTALLATION.)
2. Inspect the following wiring harness for open or short (Continuity check).

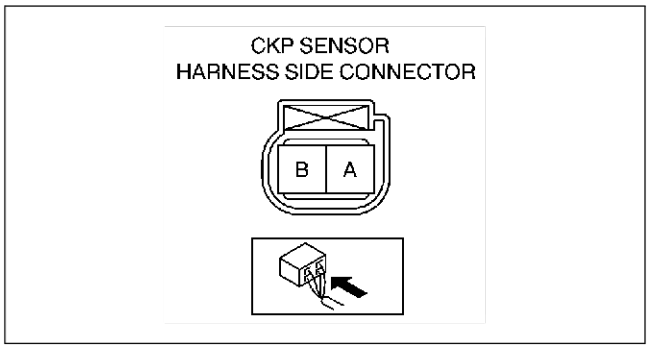

AME4240W206

Open circuit

- If there is no continuity, the circuit is open. Repair or replace the harness.
  - — CKP sensor terminal A (harness-side) and PCM terminal 21
  - — CKP sensor terminal B (harness-side) and PCM terminal 22

Short circuit

- If there is continuity, the circuit is shorted. Repair or replace the harness.
  - — CKP sensor terminal A (harness-side) and power supply
  - — CKP sensor terminal A (harness-side) and body ground
  - — CKP sensor terminal B (harness-side) and power supply
  - — CKP sensor terminal B (harness-side) and body ground

End Of Sta

F4

CRANKSHAFT POSITION SENSOR REMOVAL/INSTALLATION

AME424018230W02

1. Disconnect the CKP sensor connector.

Caution
- **Do not forcefully pull the wiring harness of the CKP sensor. Doing so will break the harness.**

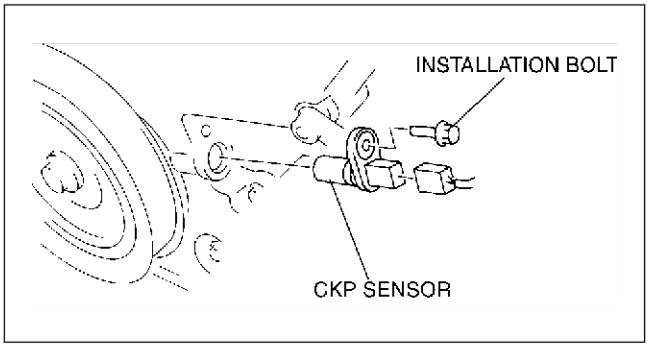

AMU0140W108

2. Remove the CKP sensor installation bolt.
3. Remove the CKP sensor.
4. Install in the reverse order of removal.

Caution
- **When foreign material such as an iron chip is on the CKP sensor, it can cause abnormal output from the sensor because of flux turbulence and adversely affect the engine control. Be sure there is no foreign material on the CKP sensor when replacing.**

Tightening torque
8.0—12.0 N·m
{82—122 kgf·cm, 71—106 in·lbf}

5. Reconnect the CKP sensor connector.

End Of Sie

CAMSHAFT POSITION (CMP) SENSOR INSPECTION

AME424018200W01

Resistance Inspection

1. Disconnect the CMP sensor connector.
2. Measure the resistance between CMP sensor terminals A and B using an ohmmeter.

Specification
308—376 ohms

- If not as specified, replace the CMP sensor.
- If CMP sensor resistance is okay, but PID value or PCM terminals 85 and 86 voltages are out of specification, perform the “Circuit Open/Short Inspection”.

Circuit Open/Short Inspection

1. Disconnect the PCM connector. (See F4–90 PCM REMOVAL/INSTALLATION.)
2. Inspect the following wiring harness for open or short (Continuity check).

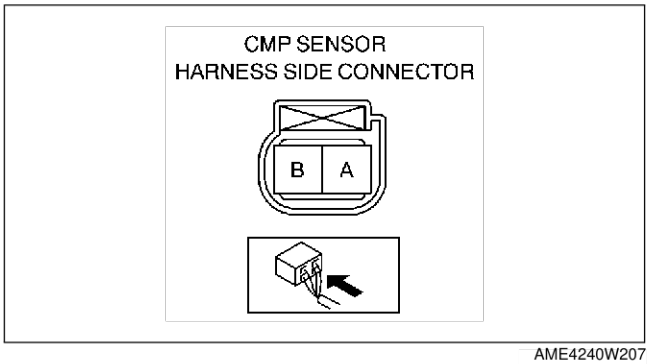

AME4240W207

Open circuit
- If there is no continuity, the circuit is open. Repair or replace the harness.
  - — CMP sensor terminal A (harness-side) and PCM terminal 85
  - — CMP sensor terminal B (harness-side) and PCM terminal 86

Short circuit
- If there is continuity, the circuit is shorted. Repair or replace the harness.
  - — CMP sensor terminal A (harness-side) and power supply
  - — CMP sensor terminal A (harness-side) and body ground
  - — CMP sensor terminal B (harness-side) and power supply
  - — CMP sensor terminal B (harness-side) and body ground

End Of Sie

CAMSHAFT POSITION SENSOR REMOVAL/INSTALLATION

AME424018200W02

1. Disconnect the CMP sensor connector.

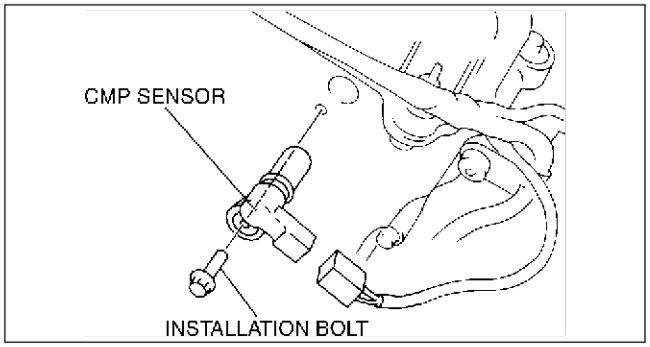

AMU0140W109

Caution
- **Do not forcefully pull the wiring harness of the CMP sensor. Doing so will break the harness.**

2. Remove the CMP sensor installation bolt.
3. Remove the CMP sensor.
4. Install in the reverse order of removal.

Caution
- **When foreign material such as an iron chip is on the CMP sensor, it can cause abnormal output from the sensor because of flux turbulence and adversely affect the engine control. Be sure there is no foreign material on the CMP sensor when replacing.**

Tightening torque
8.0—12.0 N·m
{82—122 kgf·cm, 71—106 in·lbf}

5. Reconnect the CMP sensor connector.

KNOCK SENSOR INSPECTION

AME424018921W01

F4

Note
- Perform the following test only when directed.

Resistance Inspection
1. Turn the ignition switch to LOCK.
2. Disconnect the knock sensor connector.
3. Measure the resistance between the knock sensor terminals A and B.
   - If not as specified, replace the knock sensor.
   - If the knock sensor is okay, but PID value or PCM terminal 57 and 66 voltage are out of specification, perform the “Circuit Open/Short Inspection”.

Specification
Approx. 560 kilohms (20 °C {68 °F})

Circuit Open/Short Inspection
1. Disconnect the PCM connector. (See F4–90 PCM REMOVAL/INSTALLATION.)
2. Inspect the following wiring harness for open or short (Continuity check).

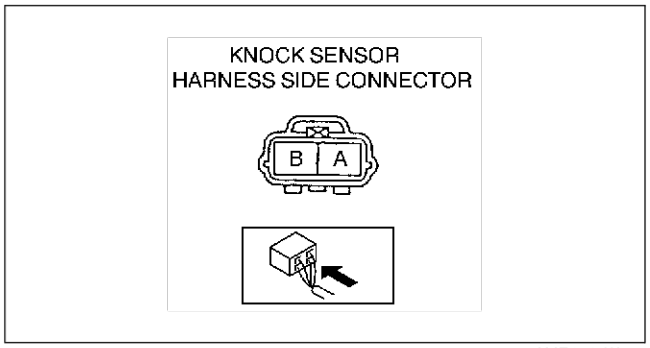

AME4240W208

Open circuit
- If there is no continuity, the circuit is open. Repair or replace the harness.
  — Knock sensor terminal A (harness-side) and PCM terminal 57
  — Knock sensor terminal B (harness-side) and PCM terminal 4

Short circuit
- If there is continuity, the circuit is shorted. Repair or replace the harness.
  — Knock sensor terminal A (harness-side) and power supply
  — Knock sensor terminal A (harness-side) and body ground
  — Knock sensor terminal B (harness-side) and power supply
  — Knock sensor terminal B (harness-side) and body ground

End Of Sta

KNOCK SENSOR REMOVAL/INSTALLATION

AME424018921W02

1. Disconnect the knock sensor connector.
2. Remove the knock sensor.
3. Install in the reverse order of removal.

Tightening torque
19.6—31.0 N·m {2.00—3.16 kgf·m, 14.5—22.8 ft·lbf}

End Of Sie

BAROMETRIC PRESSURE SENSOR/EGR BOOST SENSOR INSPECTION

AME424018881W06

Note
- Perform the following test only when directed.

Voltage Inspection

1. Turn the ignition switch to LOCK.
2. Connect the **SSTs** (WDS or equivalent) to the DLC-2.
3. Turn the ignition switch to ON (Engine OFF).
4. Select BARO PID on the **SSTs** (WDS or equivalent).
5. Disconnect the vacuum hose between the EGR boost sensor and the EGR boost sensor solenoid valve.
6. Verify that BARO PID is within the specification.

Note
- The output voltage varies with the following condition.
  - — Input voltage **4.5—5.5 V**
  - — Outside temperature **10—50 °C {50—122 °F}**
  - — Sea level **–200—3,000 m {–656—9,840 ft}**

Specification
Measurement voltage: 2.3—4.7 V

Caution
- **Do not apply vacuum out of specification. Doing so will damage the EGR boost sensor.**

7. Apply vacuum of **–26.6 kPa {–200 mmHg, –7.85 inHg}** to the EGR boost sensor and verify that BARO PID varies from Step 7 as specified.
   - If not as specified, perform the “Circuit Open/Short Inspection”.

Specification
Voltage variation: 0.8—1.3 V

Circuit Open/Short Inspection

1. Disconnect the PCM connector. (See F4–90 PCM REMOVAL/INSTALLATION.)
2. Inspect the following wiring harness for open or short (Continuity check).

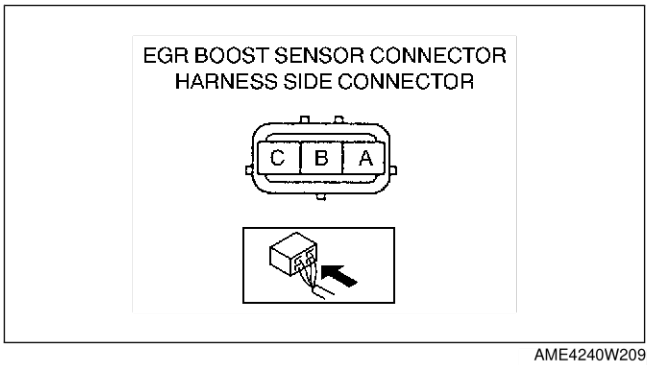

AME4240W209

Open circuit
- If there is no continuity, the circuit is open. Repair or replace the harness.
  - — EGR boost sensor terminal C (harness-side) and PCM terminal 90
  - — EGR boost sensor terminal B (harness-side) and PCM terminal 34
  - — EGR boost sensor terminal A (harness-side) and PCM terminal 91

Short circuit
- If there is continuity, the circuit is shorted. Repair or replace the harness.
  - — EGR boost sensor terminal C (harness-side) and power supply
  - — EGR boost sensor terminal C (harness-side) and body ground
  - — EGR boost sensor terminal B (harness-side) and power supply
  - — EGR boost sensor terminal B (harness-side) and body ground
  - — EGR boost sensor terminal A (harness-side) and power supply

End Of Sie

HEATED OXYGEN SENSOR (HO2S) INSPECTION

AME424018861W01

HO2S Voltage Inspection

Note
- Perform the following test only when directed.

1. Warm up the engine and run it at idle.
2. Disconnect the HO2S (front or rear) connector.
3. Connect the voltmeter test leads to the following HO2S terminals:
   European (L.H.D.) specs.
   - HO2S (Front, RH) and HO2S (Rear, RH)
     — (+) lead—terminal A
     — (–) lead—terminal B
   - HO2S (Front, LH) and HO2S (Rear, LH)
     — (+) lead—terminal A
     — (–) lead—terminal B

   Australian, General (L.H.D. R.H.D.) specs.
   - HO2S (Front, RH)
     — (+) lead—terminal A
     — (–) lead—terminal B
   - HO2S (Front, LH)
     — (+) lead—terminal A
     — (–) lead—terminal B
4. Run the engine at **3,000 rpm** until the voltmeter moves between **approx. 0** and **1.0 V**.
5. Verify that the measurement voltage changes when the engine speed increases and decreases suddenly several times.
   - If not as specified, replace the HO2S.
   - If the HO2S is okay, but PID value or PCM terminal voltages are out of specification, perform the “Circuit Open/Short Inspection”.

Specification

Engine speed	Voltage (V)
Increase	0.5—1.0
Decrease	0—0.5

HO2S Circuit Open/Short Inspection

1. Disconnect the PCM connector. (See F4–90 PCM REMOVAL/INSTALLATION.)
2. Inspect the following wiring harness for open or short (Continuity check).

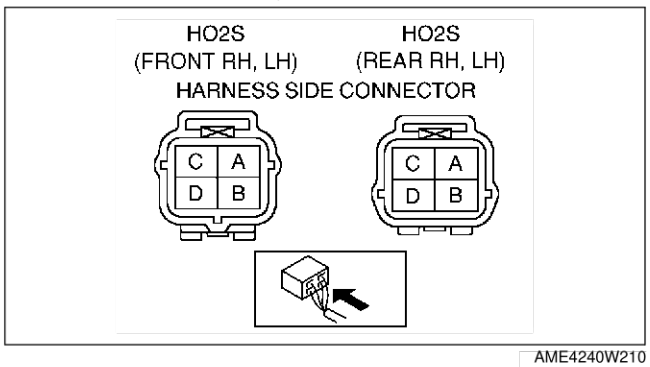

AME4240W210

Open circuit
- If there is no continuity, the circuit is open. Repair or replace the harness.

  European (L.H.D.) specs.
  — HO2S (Front, RH) terminal A (harness-side) and PCM terminal 60
  — HO2S (Front, RH) terminal B (harness-side) and PCM terminal 91
  — HO2S (Rear, RH) terminal A (harness-side) and PCM terminal 35
  — HO2S (Rear, RH) terminal B (harness-side) and PCM terminal 91
  — HO2S (Front, LH) terminal A (harness-side) and PCM terminal 87
  — HO2S (Front, LH) terminal B (harness-side) and PCM terminal 91
  — HO2S (Rear, LH) terminal A (harness-side) and PCM terminal 61
  — HO2S (Rear, LH) terminal B (harness-side) and PCM terminal 91

  Australian, General (L.H.D. R.H.D.) specs.
  — HO2S (Front, RH) terminal A (harness-side) and PCM terminal 60
  — HO2S (Front, RH) terminal B (harness-side) and PCM terminal 91
  — HO2S (Front, LH) terminal A (harness-side) and PCM terminal 87
  — HO2S (Front, LH) terminal B (harness-side) and PCM terminal 91

Short circuit

- If there is continuity, the circuit is shorted. Repair or replace the harness.

European (L.H.D.) specs.

— HO2S (Front, RH) terminal A (harness-side) and body ground
— HO2S (Front, RH) terminal A (harness-side) and power supply
— HO2S (Front, RH) terminal B (harness-side) and power supply
— HO2S (Rear, RH) terminal A (harness-side) and body ground
— HO2S (Rear, RH) terminal A (harness-side) and power supply
— HO2S (Rear, RH) terminal B (harness-side) and power supply
— HO2S (Front, LH) terminal A (harness-side) and body ground
— HO2S (Front, LH) terminal A (harness-side) and power supply
— HO2S (Front, LH) terminal B (harness-side) and power supply
— HO2S (Rear, LH) terminal A (harness-side) and body ground
— HO2S (Rear, LH) terminal A (harness-side) and power supply
— HO2S (Rear, LH) terminal B (harness-side) and power supply

Australian, General (L.H.D. R.H.D.) specs.

— HO2S (Front, RH) terminal A (harness-side) and body ground
— HO2S (Front, RH) terminal A (harness-side) and power supply
— HO2S (Front, RH) terminal B (harness-side) and power supply
— HO2S (Front, LH) terminal A (harness-side) and body ground
— HO2S (Front, LH) terminal A (harness-side) and power supply
— HO2S (Front, LH) terminal B (harness-side) and power supply

HO2S Heater Resistance Inspection

1. Disconnect the HO2S (front or rear) connector.
2. Measure the resistance between the following HO2S terminals.

European (L.H.D.) specs.

- HO2S (Front, RH) and HO2S (Rear, RH)
  — Terminal C and D
- HO2S (Front, LH) and HO2S (Rear, LH)
  — Terminal C and D

Australian, General (L.H.D. R.H.D.) specs.

- HO2S (Front, RH)
  — Terminal C and D
- HO2S (Front, LH)
  — Terminal C and D
- If not as specified, replace the HO2S.
- If the HO2S heater is okay, but PID value or any of PCM terminal 94, 93, 95, 96 voltage are out of specification, perform the “Circuit Open/Short Inspection”.

Specification
Front (RH, LH): 5.0—6.8 ohms
Rear (RH, LH): 14.1—18.9 ohms

Circuit Open/Short Inspection

1. Disconnect the PCM connector. (See F4–90 PCM REMOVAL/INSTALLATION.)
2. Inspect the following wiring harness for open or short (Continuity check).

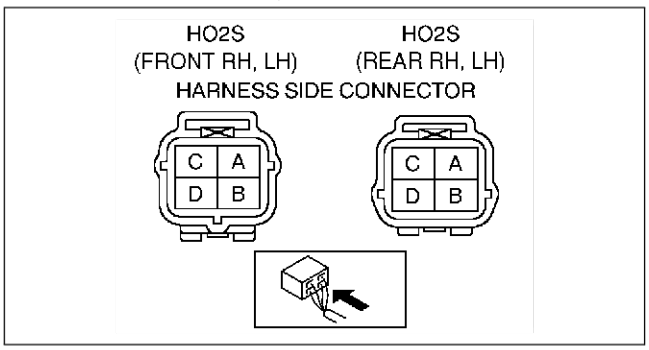

AME4240W210

Open circuit

- If there is no continuity, the circuit is open. Repair or replace the harness.

European (L.H.D.) specs.

— HO2S (Front, RH) terminal C (harness-side) and power supply
— HO2S (Front, RH) terminal D (harness-side) and PCM terminal 93
— HO2S (Rear, RH) terminal C (harness-side) and power supply
— HO2S (Rear, RH) terminal D (harness-side) and PCM terminal 95
— HO2S (Front, LH) terminal C (harness-side) and power supply
— HO2S (Front, LH) terminal D (harness-side) and PCM terminal 94
— HO2S (Rear, LH) terminal C (harness-side) and power supply
— HO2S (Rear, LH) terminal D (harness-side) and PCM terminal 96

Australian, General (L.H.D. R.H.D.) specs.
— HO2S (Front, RH) terminal C (harness-side) and power supply
— HO2S (Front, RH) terminal D (harness-side) and PCM terminal 93
— HO2S (Front, LH) terminal C (harness-side) and power supply
— HO2S (Front, LH) terminal D (harness-side) and PCM terminal 94

Short circuit
- If there is continuity, the circuit is shorted. Repair or replace the harness.
  — HO2S (Front, RH) terminal C (harness-side) and body ground
  — HO2S (Front, RH) terminal D (harness-side) and body ground
  — HO2S (Front, RH) terminal D (harness-side) and power supply
  — HO2S (Rear, RH) terminal C (harness-side) and body ground
  — HO2S (Rear, RH) terminal D (harness-side) and body ground
  — HO2S (Rear, RH) terminal D (harness-side) and power supply
  — HO2S (Front, LH) terminal C (harness-side) and body ground
  — HO2S (Front, LH) terminal D (harness-side) and body ground
  — HO2S (Front, LH) terminal D (harness-side) and power supply
  — HO2S (Rear, LH) terminal C (harness-side) and body ground
  — HO2S (Rear, LH) terminal D (harness-side) and body ground
  — HO2S (Rear, LH) terminal D (harness-side) and power supply

  Australian, General (L.H.D. R.H.D.) specs.
  — HO2S (Front, RH) terminal C (harness-side) and body ground
  — HO2S (Front, RH) terminal D (harness-side) and body ground
  — HO2S (Front, RH) terminal D (harness-side) and power supply
  — HO2S (Front, LH) terminal C (harness-side) and body ground
  — HO2S (Front, LH) terminal D (harness-side) and body ground
  — HO2S (Front, LH) terminal D (harness-side) and power supply

End Of Ste

POWER STEERING PRESSURE (PSP) SWITCH INSPECTION

AME424032230W01

Note
- Perform the following test only when directed.

Continuity Inspection
1. Inspect the following if the power steering is inoperative (See N–5 POWER STEERING FLUID INSPECTION.):
   - Power steering fluid level
   - Power steering fluid leakage
   - Power steering fluid pressure
2. Disconnect the PSP switch connector.
3. Start the engine.
4. Inspect for continuity between the PSP switch terminal and GND using an ohmmeter.
   - If not as specified, replace the PSP switch.
   - If the PSP switch is okay, but PID value or PCM terminal 31 voltage are out of specification, perform the “Circuit Open/Short Inspection”.

Specification

○—○ : Continuity

Condition	Terminal	GND
Steering wheel in straight ahead position.		
While turning steering wheel.	○	○

YMU140WC3

Circuit Open/Short Inspection
1. Disconnect the PCM connector. (See F4–90 PCM REMOVAL/INSTALLATION.)
2. Inspect the following harness for open or short (Continuity check).

Open circuit
- If there is no continuity, the circuit is open. Repair or replace the harness.
  — PSP switch terminal and PCM terminal 31

End Of Ste

ON-BOARD DIAGNOSTIC

FOREWORD

AME427018881W07

- When the customer reports a vehicle malfunction, check the malfunction indicator lamp (MIL) indication and diagnostic trouble code (DTC), then diagnose the malfunction according to following flowchart.
  - — If a DTC exists, diagnose the applicable DTC inspection. (See F4–113 DTC TABLE.)
  - — If no DTC exists and the MIL does not illuminate or flash, diagnose the applicable symptom troubleshooting. (See F4–250 SYMPTOM DIAGNOSTIC INDEX.)

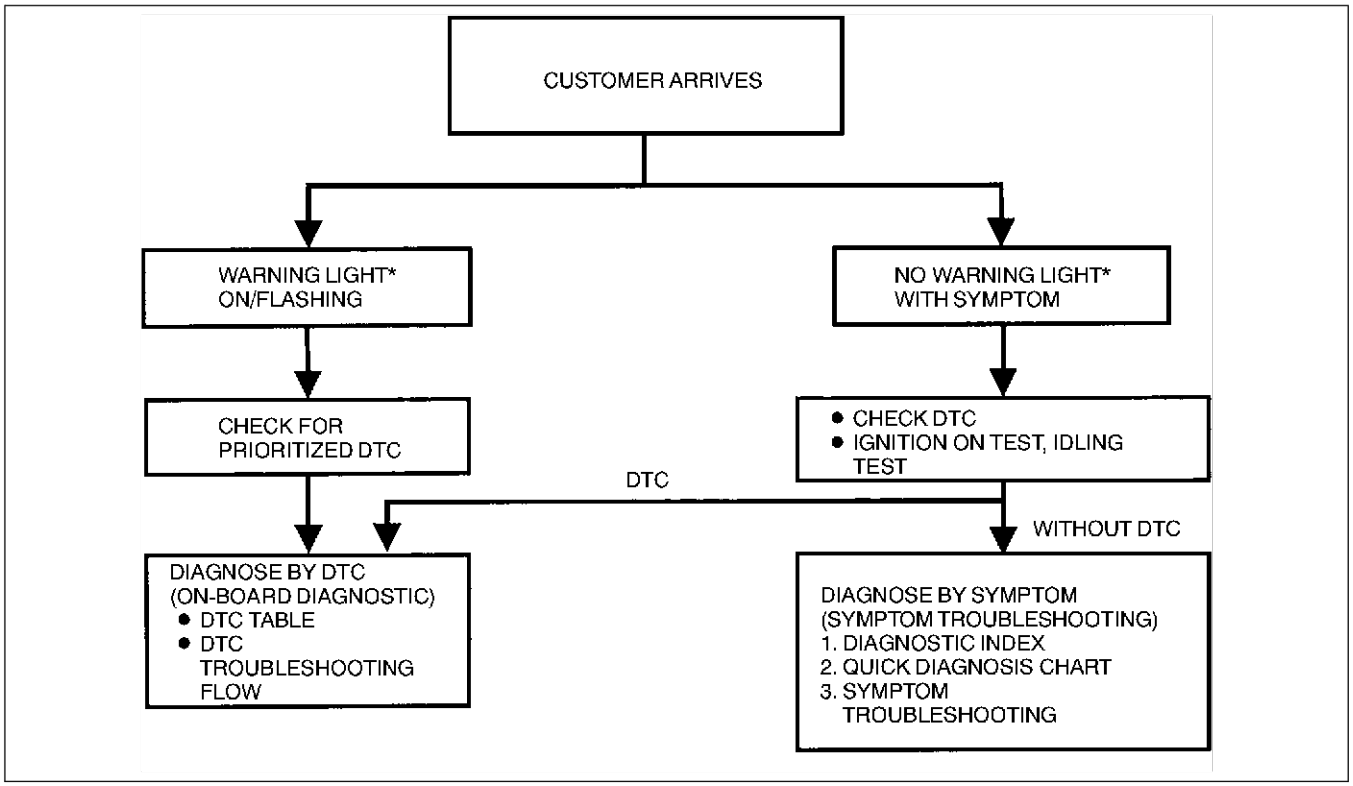

YMU102WBX

* : Malfunction Indicator Lamp (MIL), Generator Warning Light, Security Light

End Of Sie

OBD PENDING TROUBLE CODES

AME427018881W08

- These appear when a problem is detected in a monitored system. The code for a failed system is stored in the PCM memory in the first drive cycle. This code is called the pending code. If the problem is not found in the second drive cycle, the PCM judges that the system returned to normal or the problem was mistakenly detected, and deletes the pending code. If the problem is found in the second drive cycle too, the PCM judges that the system has failed, deletes the pending code, stored the DTC.

End Of Sie

OBD FREEZE FRAME DATA

AME427018881W09

- This is the technical data which indicates the engine condition at the time of the first malfunction. This data will remain in the memory even if another emission-related DTC is stored, with the exception of the Misfire or Fuel System DTCs. Once freeze frame data for the Misfire or Fuel System DTC is stored, it will overwrite any previous data and the freeze frame will not be overwritten again.

End Of Sie

OBD ON-BOARD SYSTEM READINESS TEST

AME427018881W10

- This shows OBD systems operating status. If any monitor function is incomplete, WDS or equivalent will identify which monitor function has not been completed. Misfires, Fuel System and Comprehensive Components (CCM) are continuous monitoring-type functions. The catalyst, EGR system and oxygen sensor will be monitored under drive cycles. The OBD diagnostic system is initialized by performing the DTC cancellation procedure or disconnecting the negative battery cable.

End Of Sie

OBD DIAGNOSTIC MONITORING TEST RESULTS

AME427018881W11

- The results from the intermittent monitor system's technical data are used to determine whether the system is normal or not. They also display the system thresholds and diagnostic results. The intermittent monitor system monitors the oxygen sensor, EGR system and the catalyst.

End Of Ste

OBD READ/CLEAR DIAGNOSTIC TEST RESULTS

AME427018881W12

- This retrieves all stored DTCs in the PCM and clears the DTC, Freeze Frame Data, On-Board Readiness Test Results, Diagnostic Monitoring Test Results and Pending Trouble Codes.

End Of Ste

OBD PARAMETER IDENTIFICATION (PID) ACCESS

AME427018881W13

- The PID mode allows access to certain data values, analog and digital inputs and outputs, calculated values and system status information. Since PID values for output devices are PCM internal data values, inspect each device to identify which output devices are malfunctioning.

End Of Ste

ON-BOARD DIAGNOSTIC TEST

AME427018881W14

DTCs Reading Procedure

1. Perform the necessary vehicle preparation and visual inspection.
2. Connect WDS or equivalent to the vehicle DLC-2 16-pin connector located the left side (L.H.D.) or right side (R.H.D.) of the center console.
3. Retrieve DTCs by WDS or equivalent.

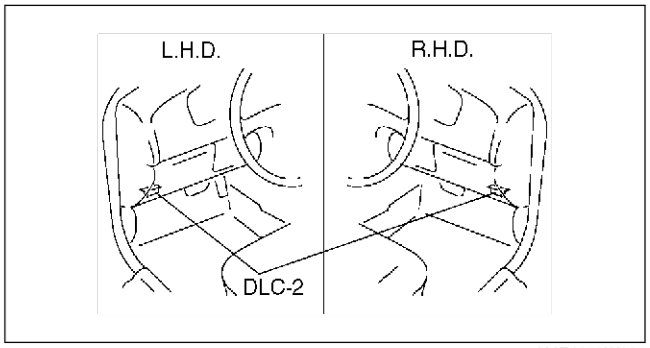

AME4270W001

Pending trouble code access procedure

1. Perform the necessary vehicle preparation and visual inspection.
2. Connect WDS or equivalent to the vehicle DLC-2 16-pin connector located the left side (L.H.D.) or right side (R.H.D.) of the center console.
3. Retrieve **PENDING TROUBLE CODES** by WDS or equivalent.

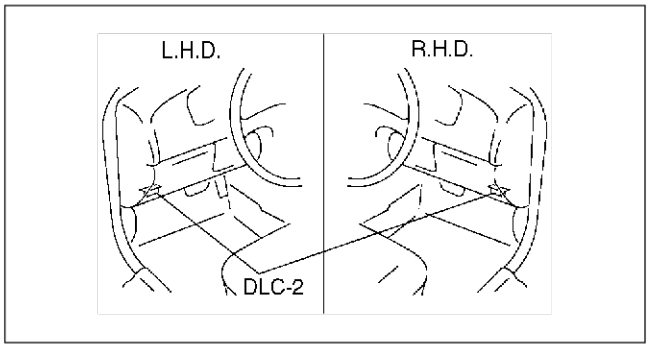

AME4270W001

Freeze frame PID data access procedure

1. Perform the necessary vehicle preparation and visual inspection.
2. Connect WDS or equivalent to the vehicle DLC-2 16-pin connector located the left side (L.H.D.) or right side (R.H.D.) of the center console.
3. Record the FREEZE FRAME DATA by WDS or equivalent.

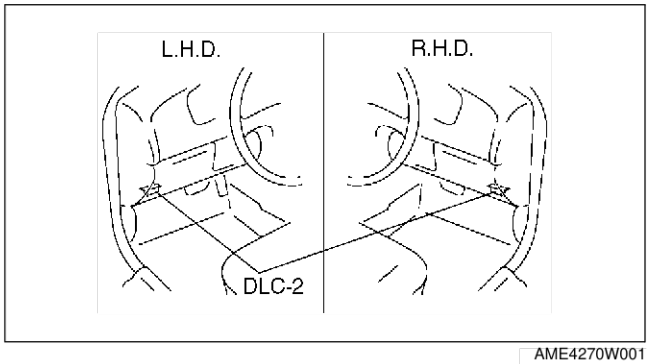

AME4270W001

On-Board system readiness tests access procedure

1. Perform the necessary vehicle preparation and visual inspection.
2. Connect WDS or equivalent to the vehicle DLC-2 16-pin connector located the left side (L.H.D.) or right side (R.H.D.) of the center console.
3. Monitor the OBD systems operating status by WDS or equivalent.

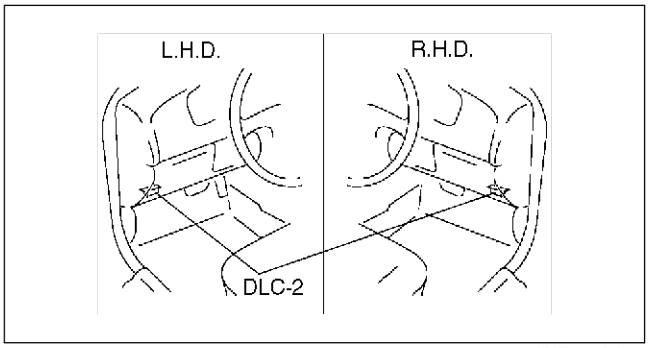

AME4270W001

Diagnostic monitoring test results access procedure

1. Perform the necessary vehicle preparation and visual inspection.
2. Connect WDS or equivalent to the vehicle DLC-2 16-pin connector located the left side (L.H.D.) or right side (R.H.D.) of the center console.
3. Access to the DIAGNOSTIC MONITORING TEST RESULTS and read the test results by WDS or equivalent.

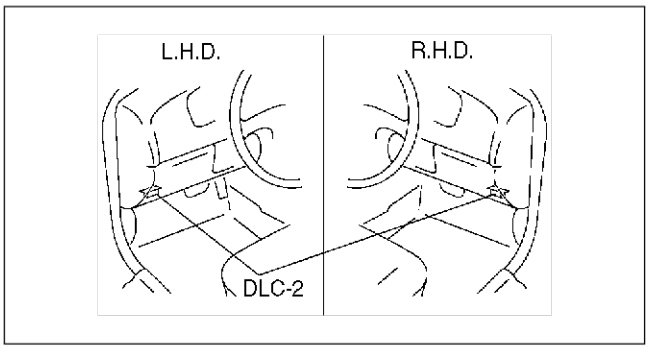

AME4270W001

End Of Sie

AFTER REPAIR PROCEDURE

AME427018881W15

1. Connect WDS or equivalent.
2. Cycle the ignition key from OFF to ON.
3. Record DTC if retrieved.
4. Erase all diagnostic data by WDS or equivalent.

End Of Sie

OBD DRIVE MODE

AME427018881W16

- Performing the Drive Mode inspects the OBD system for proper operation. The Drive Mode must be performed to ensure that no additional DTCs are present.
- During Drive Mode, the following systems are inspected:
  - — EGR system (Australian, General (L.H.D. R.H.D.) specs.)
  - — Oxygen sensor (HO2S)
  - — Oxygen sensor heater
  - — Catalytic converter (TWC) (European (L.H.D.) specs.)

Caution

- **While performing the Drive Mode, always operate the vehicle in a safe and lawful manner.**
- **When the WDS or equivalent is used to observe monitor system condition while driving, be sure to have another technician with you, or record the data in the WDS or equivalent using the PID/DATA MONITOR AND RECORD function and inspect later.**

Note

- Vehicle speed and engine speed detected by the PCM may differ from that indicated by the speedometer and tachometer. Use the WDS or equivalent to monitor vehicle speed.
- If the OBD system inspection is not completed during the Drive Mode, the following causes are considered:
  1. The OBD system detects the malfunction.
  2. The Drive Mode procedure is not completed correctly.
- Disconnecting the battery will reset the memory. Do not disconnect the battery during and after Drive Mode.
- The WDS or equivalent can be used at anytime through the course of Drive Mode to monitor the completion condition. Monitoring can be done by viewing the ON-BOARD SYSTEM READINESS menu.

PCM Adaptive Memory Procedure Drive Mode

Note
- The PCM adaptive memory condition can be confirmed with RFCFLAG PID.
- If RFCFLAG PID is ON, PCM adaptive memory procedure drive mode is not necessary, because PCM already has adaptive memory.
- If RFCFLAG PID is OFF, PCM adaptive memory procedure drive mode should be performed before other drive mode.

1. Start the engine and warm up completely.
2. Verify the following conditions and correct if necessary.
   - All accessory loads (A/C, headlights, blower fan, rear window defroster) are off.
   - Initial ignition timing and idle speed are within specification.
   - TEN and GND of DLC are not connected.
3. Perform no load racing at the engine speed of **2,500—3,500 rpm** for **15 s or more**, then idle the engine for **above 20 s** after the cooling fan is stopped. If possible, monitor RPM PID for engine speed and FAN DUTY PID for cooling fan condition during this procedure.
4. Turn ignition key off then on again.
5. Access to RFCFLAG PID to confirm PCM adaptive memory condition.
   - If RFCFLAG PID is ON, PCM adaptive memory procedure drive mode is completed.
   - If RFCFLAG PID is still OFF, go back to Step 1.

HO2S Heater, HO2S, and TWC Repair Verification Drive Mode (European (L.H.D.) Specs.)

1. Access to RFCFLAG PID to confirm PCM adaptive memory condition.
   - If RFCFLAG PID is OFF, perform PCM adaptive memory procedure drive mode first.
   - If RFCFLAG PID is NO, start the engine and warm up completely.
2. Verify all accessory loads (A/C, headlights, blower fan, rear window defroster) are off.
3. Drive the vehicle as shown in the graph. Driving condition before the constant speed driving is not specified.
4. Stop vehicle and access the ON-BOARD SYSTEM READINESS menu to inspect the Drive Mode completion condition.
   - If completed, RFC changes from NO to YES.
   - If not completed, turn the ignition key off then go back to Step 3.
5. Access DIAGNOSTIC MONITORING TEST RESULTS menu to inspect the monitor results.
   - If MEAS are not within specification, repair has not been completed.
6. Verify no DTCs are available.

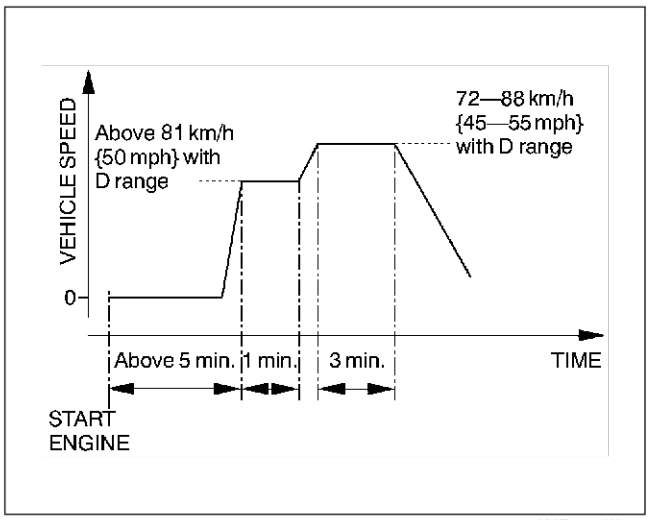

AME4270W107

F4

HO2S Heater, HO2S, and EGR System Repair Verification Drive Mode (Australian, General (L.H.D. R.H.D.) Specs.)

1. Access to RFCFLAG PID to confirm PCM adaptive memory condition.
   - If RFCFLAG PID is OFF, perform PCM adaptive memory procedure drive mode first.
   - If RFCFLAG PID is NO, start the engine and warm up completely.
2. Verify all accessory loads (A/C, headlights, blower fan, rear window defroster) are off.
3. Drive the vehicle as shown in the graph. Driving condition before the constant speed driving is not specified.
4. Stop vehicle and access the ON-BOARD SYSTEM READINESS menu to inspect the Drive Mode completion condition.
   - If completed, RFC changes from NO to YES.
   - If not completed, turn the ignition key off then go back to Step 3.
5. Access DIAGNOSTIC MONITORING TEST RESULTS menu to inspect the monitor results.
   - If MEAS are not within specification, repair has not been completed.
6. Verify no DTCs are available.

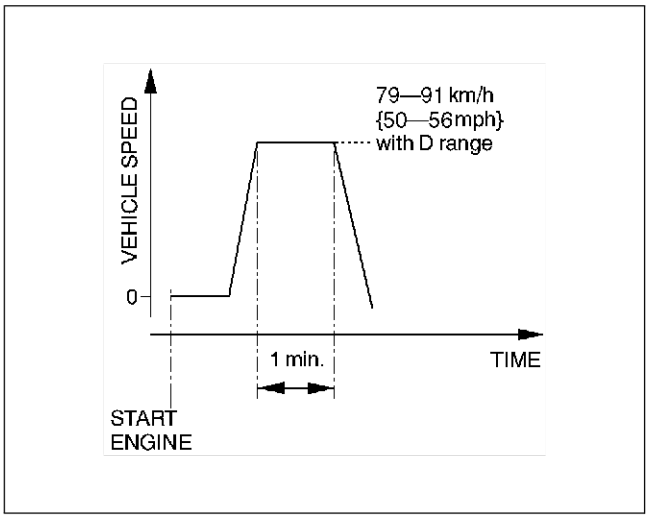

AME4270W108

End Of Sie

DIAGNOSTIC MONITORING TEST RESULTS

AME427018881W17

- The purpose of this test mode is to confirm the result of OBD monitor diagnostic test results. The result values stored when particular monitor is completed are displayed. If the monitor is not completed, initial value is displayed.

TEST ID	Description	Related system
10:02:11*1	HO2S (Front, RH) lean-to-rich response time	HO2S
10:02:21*1	HO2S (Front, LH) lean-to-rich response time	
10:03:11*1	HO2S (Front, RH) rich-to-lean response time	
10:03:21*1	HO2S (Front, LH) rich-to-lean response time	
10:04:01	HO2S (Front) rich/lean inversion voltage	
10:04:02*1	HO2S (Rear) rich/lean inversion voltage	
10:05:01	HO2S (Front) lean threshold voltage	
10:06:01	HO2S (Front) rich threshold voltage	
10:11:11*1	Front and HO2S (Rear) switching time ratio	TWC
10:11:21*1	Front and HO2S (Rear) switching time ratio	
10:41:00*2	EGR pressure variation	EGR

*1 : European (L.H.D.) specs.
*2 : Australian, General (L.H.D. R.H.D.) specs.

End Of Sie

DTC TABLE

AME427018881W18

×: Applicable
—: Not applicable

DTC No.	Condition	MIL	DC	Monitor item	Memory function	Page
P0031	HO2S heater (Front, RH) circuit low	ON	2	O_2 sensor heater	×	(See F4–116 DTC P0031)
P0032	HO2S heater (Front, RH) circuit high	ON	2	O_2 sensor heater	×	(See F4–118 DTC P0032)
P0037*2	HO2S heater (Rear, RH) circuit low	ON	2	O_2 sensor heater	×	(See F4–120 DTC P0037)
P0038*2	HO2S heater (Rear, RH) circuit high	ON	2	O_2 sensor heater	×	(See F4–122 DTC P0038)
P0051	HO2S heater (Front, LH) circuit low	ON	2	O_2 sensor heater	×	(See F4–124 DTC P0051)
P0052	HO2S heater (Front, LH) circuit high	ON	2	O_2 sensor heater	×	(See F4–126 DTC P0052)
P0057*2	HO2S heater (Rear, LH) circuit low	ON	2	O_2 sensor heater	×	(See F4–128 DTC P0057)
P0058*2	HO2S heater (Rear, LH) circuit high	ON	2	O_2 sensor heater	×	(See F4–130 DTC P0058)
P0101	MAF sensor inconsistent with TP sensor	ON	2	CCM	×	(See F4–132 DTC P0101)
P0102	MAF circuit low input	ON	1	CCM	×	(See F4–134 DTC P0102)
P0103	MAF circuit high input	ON	1	CCM	×	(See F4–136 DTC P0103)
P0106*3	EGR boost sensor circuit performance problem	ON	2	CCM	×	(See F4–138 DTC P0106)
P0107	BARO sensor/EGR boost sensor circuit low input	ON	1	CCM	×	(See F4–140 DTC P0107)
P0108	BARO sensor/EGR boost sensor circuit high input	ON	1	CCM	×	(See F4–142 DTC P0108)
P0111	IAT circuit performance problem	ON	2	CCM	×	(See F4–144 DTC P0111)
P0112	IAT circuit low input	ON	1	CCM	×	(See F4–146 DTC P0112)
P0113	IAT circuit high input	ON	1	CCM	×	(See F4–148 DTC P0113)
P0117	ECT circuit low input	ON	1	CCM	×	(See F4–150 DTC P0117)
P0118	ECT circuit high input	ON	1	CCM	×	(See F4–152 DTC P0118)
P0121	Throttle position stuck close	ON	2	CCM	×	(See F4–154 DTC P0121)
P0122	TP circuit low input	ON	1	CCM	×	(See F4–156 DTC P0122)
P0123	TP circuit high input	ON	1	CCM	×	(See F4–158 DTC P0123)
P0125	Excessive time to enter closed loop fuel control	ON	2	CCM	×	(See F4–160 DTC P0125)
P0131	HO2S (Front, RH) no inversion (low stuck)	ON	2	CCM	×	(See F4–161 DTC P0131, P0132, P0151, P0152)
P0132	HO2S (Front, RH) no inversion (high stuck)	ON	2	CCM	×	(See F4–161 DTC P0131, P0132, P0151, P0152)
P0133*2	HO2S (Front, RH) circuit malfunction	ON	2	O_2 sensor	×	(See F4–164 DTC P0133, P0153)
P0134	HO2S (Front, RH) circuit no activity detected	ON	2	CCM	×	(See F4–166 DTC P0134, P0154)
P0138*2	HO2S (Rear, RH) circuit high input	ON	2	CCM	×	(See F4–170 DTC P0138, P0158)
P0140*2	HO2S (Rear, RH) circuit no activity detected	ON	2	CCM	×	(See F4–172 DTC P0140, P0160)
P0151	HO2S (Front, LH) no inversion (low stuck)	ON	2	CCM	×	(See F4–161 DTC P0131, P0132, P0151, P0152)
P0152	HO2S (Front, LH) no inversion (high stuck	ON	2	CCM	×	(See F4–161 DTC P0131, P0132, P0151, P0152)
P0153*2	HO2S (Front, LH) circuit malfunction	ON	2	O_2 sensor	×	(See F4–164 DTC P0133, P0153)
P0154	HO2S (Front, LH) circuit no activity detected	ON	2	CCM	×	(See F4–166 DTC P0134, P0154)

DTC No.	Condition	MIL	DC	Monitor item	Memory function	Page
P0158*2	HO2S (Rear, LH) circuit high input	ON	2	CCM	×	(See F4–170 DTC P0138, P0158)
P0160*2	HO2S (Rear, LH) circuit no activity detected	ON	2	CCM	×	(See F4–172 DTC P0140, P0160)
P0171	Fuel trim system (RH) too lean	ON	2	Fuel	×	(See F4–175 DTC P0171, P0174)
P0172	Fuel trim system (RH) too rich	ON	2	Fuel	×	(See F4–178 DTC P0172, P0175)
P0174	Fuel trim system (LH) too lean	ON	2	Fuel	×	(See F4–175 DTC P0171, P0174)
P0175	Fuel trim system (LH) too rich	ON	2	Fuel	×	(See F4–178 DTC P0172, P0175)
P0300*2	Random misfire detected	Flash / ON	1 or 2	Misfire	×	(See F4–180 DTC P0300)
P0301*2	Cylinder No.1 misfire detected	Flash / ON	1 or 2	Misfire	×	(See F4–184 DTC P0301, P0302, P0303, P0304, P0305, P0306)
P0302*2	Cylinder No.4 misfire detected	Flash / ON	1 or 2	Misfire	×	
P0303*2	Cylinder No.2 misfire detected	Flash / ON	1 or 2	Misfire	×	
P0304*2	Cylinder No.5 misfire detected	Flash / ON	1 or 2	Misfire	×	
P0305*2	Cylinder No.3 misfire detected	Flash / ON	1 or 2	Misfire	×	
P0306*2	Cylinder No.6 misfire detected	Flash / ON	1 or 2	Misfire	×	
P0327	Knock sensor circuit low input	ON	1	CCM	×	(See F4–186 DTC P0327)
P0328	Knock sensor circuit high input	ON	1	CCM	×	(See F4–188 DTC P0328)
P0335	CKP sensor circuit malfunction	ON	1	CCM	×	(See F4–190 DTC P0335)
P0340	CMP sensor circuit malfunction	ON	1	CCM	×	(See F4–192 DTC P0340)
P0351*3	Ignition coil No.1 circuit malfunction	ON	2	CCM	×	(See F4–194 DTC P0351)
P0352*3	Ignition coil No.4 circuit malfunction	ON	2	CCM	×	(See F4–196 DTC P0352)
P0353*3	Ignition coil No.2 circuit malfunction	ON	2	CCM	×	(See F4–198 DTC P0353)
P0354*3	Ignition coil No.5 circuit malfunction	ON	2	CCM	×	(See F4–200 DTC P0354)
P0355*3	Ignition coil No.3 circuit malfunction	ON	2	CCM	×	(See F4–202 DTC P0355)
P0356*3	Ignition coil No.6 circuit malfunction	ON	2	CCM	×	(See F4–204 DTC P0356)
P0401*3	EGR flow insufficient detected	ON	2	EGR	×	(See F4–206 DTC P0401)
P0402*3	EGR flow excessive detected	ON	2	EGR	×	(See F4–208 DTC P0402)
P0403	EGR valve motor coils open or short	ON	2	CCM	×	(See F4–210 DTC P0403)
P0421*2	Warm-up catalyst system (RH) efficiency below threshold	ON	2	Catalyst	×	(See F4–212 DTC P0421, P0431)
P0431*2	Warm-up catalyst system (LH) efficiency below threshold	ON	2	Catalyst	×	
P0443	Evaporative emission control system purge control valve circuit malfunction	ON	2	CCM	×	(See F4–214 DTC P0443)
P0480	Fan control module circuit malfunction	OFF	2	CCM	×	(See F4–216 DTC P0480)
P0500	Vehicle speed sensor (VSS) circuit malfunction	ON	2	CCM	×	(See F4–218 DTC P0500)
P0505	IAC valve circuit malfunction	ON	1	CCM	×	(See F4–220 DTC P0505)
P0506	Idle control system RPM lower than expected	ON	2	CCM	×	(See F4–222 DTC P0506)
P0507	Idle control system RPM higher than expected	ON	2	CCM	×	(See F4–223 DTC P0507)
P0550	PSP switch circuit malfunction	ON	2	CCM	×	(See F4–224 DTC P0550)
P0660	Intake manifold communication control (IMCC) actuator circuit malfunction	OFF	2	CCM	×	(See F4–226 DTC P0660)
P0703	Brake switch input malfunction	ON	2	CCM	×	(See F4–228 DTC P0703)
P1309*2	PCM IC for misfire detection	ON	2	CCM	×	(See F4–229 DTC P1309)
P1562	PCM +BB voltage low	ON	1	CCM	×	(See F4–230 DTC P1562)

DTC No.	Condition	MIL	DC	Monitor item	Memory function	Page
P1602*1	Immobilizer unit-PCM communication error	OFF	–	Other	×	(See F4–232 DTC P1602)
P1603*1	Key ID numbers are not registered in PCM	OFF	–	Other	×	(See F4–234 DTC P1603)
P1604*1	Code word is not registered in PCM	OFF	–	Other	×	(See F4–235 DTC P1604)
P1621*1	Code word does not match after engine cranking	OFF	–	Other	×	(See F4–235 DTC P1621)
P1622*1	Key ID number does not match	OFF	–	Other	×	(See F4–236 DTC P1622)
P1623*1	Code word or key ID number read/write error in PCM	OFF	–	Other	×	(See F4–236 DTC P1623)
P1624*1	Immobilizer system communication counter=0	OFF	–	Other	×	(See F4–237 DTC P1624)
P1631	Generator output voltage signal no electricity	OFF	–	Other	×	(See F4–238 DTC P1631)
P1633	Battery overcharge	OFF	–	Other	×	(See F4–240 DTC P1633)
P1634	Generator terminal B circuit open	OFF	–	Other	×	(See F4–242 DTC P1634)
U0073	CAN BUS OFF	OFF	–	Other	×	(See F4–243 DTC U0073)
U0101	PCM cannot receive any signals from TCM	ON	1	CCM	×	(See F4–244 DTC U0101)

*1 : With immobilizer system only
*2 : European (L.H.D.) specs.
*3 : Australian, General (L.H.D. R.H.D.) specs.

End Of Ste

DTC P0031

AME427001084W01

DTC P0031	HO2S heater (Front, RH) circuit low
DETECTION CONDITION	• The PCM monitors the HO2S heater (Front, RH) control signal at PCM terminal 93. If PCM turns the HO2S heater (Front, RH) off but HO2S heater (Front, RH) circuit has low voltage, the PCM determines that the HO2S heater (Front, RH) circuit has malfunction. **Note** • The HO2S heater (Front, RH) is controlled by a duty signal. **Diagnostic support note** • This is a continuous monitor (O_2 sensor heater). • MIL illuminates if PCM detects the above malfunction condition in two consecutive drive cycles. • PENDING CODE is available if PCM detects the above malfunction condition during first drive cycle. • FREEZE FRAME DATA is available. • DTC is stored in PCM memory.
POSSIBLE CAUSE	• HO2S (Front, RH) malfunction • Open circuit between the main relay terminal D and HO2S (Front, RH) terminal C • Open circuit between the HO2S (Front, RH) terminal D and PCM terminal 93 • Short to ground circuit between HO2S (Front, RH) terminal D and PCM terminal 93 • Poor connection at HO2S (Front, RH) or PCM connector • PCM malfunction

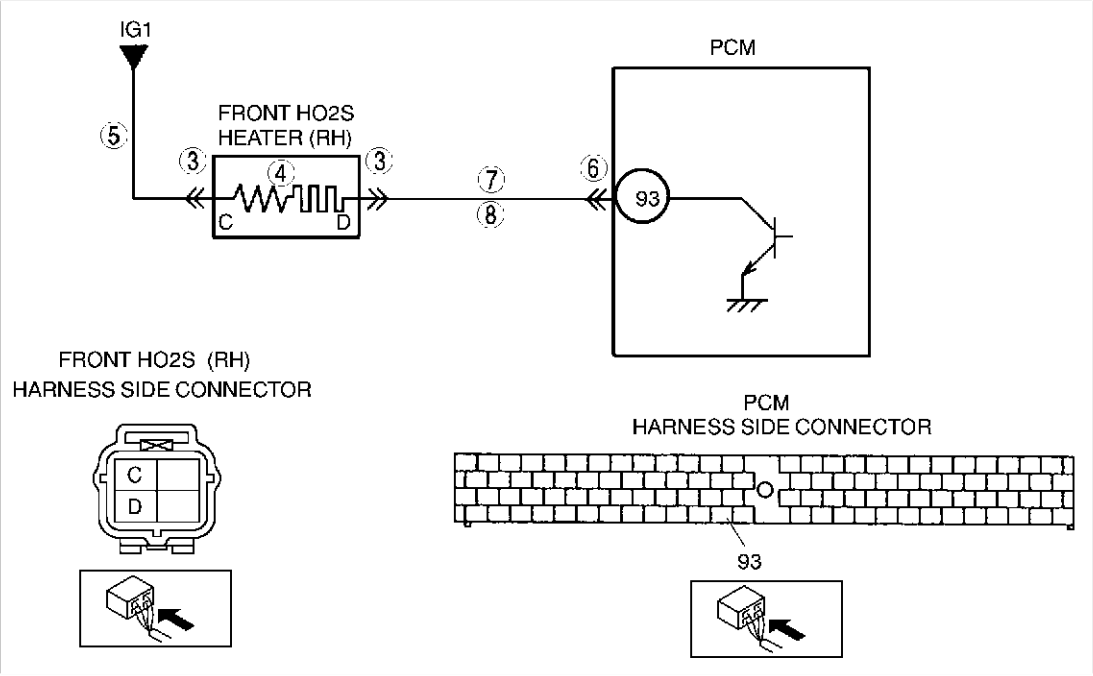

Diagnostic procedure

STEP	INSPECTION		ACTION
1	**VERIFY FREEZE FRAME DATA HAS BEEN RECORDED** • Has FREEZE FRAME DATA been recorded?	Yes	Go to next step.
		No	Record FREEZE FRAME DATA on repair order, then go to next step.
2	**VERIFY RELATED SERVICE INFORMATION AVAILABILITY** • Check for related Service Information availability. • Is any related Service Information available?	Yes	Perform repair or diagnosis according to available Service Information. • If vehicle is not repaired, go to next step.
		No	Go to next step.

STEP	INSPECTION		ACTION
3	**INSPECT HO2S (FRONT, RH) CONNECTOR FOR POOR CONNECTION** • Turn ignition key to OFF. • Disconnect HO2S (Front, RH) connector. • Check for poor connection (damaged, pulled-out pins, corrosion, etc.). • Are there any malfunctions?	Yes	Repair or replace terminal, then go to Step 9.
		No	Go to next step.
4	**INSPECT HO2S HEATER (FRONT, RH)** • Inspect HO2S heater (front, RH). (See F4–105 HEATED OXYGEN SENSOR (HO2S) INSPECTION) • Is HO2S heater (front, RH) okay?	Yes	Go to next step.
		No	Replace the HO2S (Front, RH), then go to Step 9.
5	**INSPECT POWER CIRCUIT OF HO2S HEATER (FRONT, RH) FOR OPEN CIRCUIT** • Turn ignition key to ON (Engine OFF). • Measure voltage between HO2S (Front, RH) terminal C (harness-side) and body ground. • Is there voltage **B+**?	Yes	Go to next step.
		No	Repair or replace harness for open circuit, then go to Step 9.
6	**INSPECT PCM CONNECTOR FOR POOR CONNECTION** • Turn ignition key to OFF. • Disconnect PCM connector. • Check for poor connection (damaged, pulled-out pins, corrosion, etc.). • Are there any malfunctions?	Yes	Repair terminal, then go to Step 9.
		No	Go to next step.
7	**INSPECT CONTROL CIRCUIT OF HO2S HEATER (FRONT, RH) FOR SHORT TO GROUND** • Check continuity between HO2S (Front, RH) terminal D (harness-side) and body ground. • Is there any continuity?	Yes	Repair or replace harness for short to ground, then go to Step 9.
		No	Go to next step.
8	**INSPECT CONTROL CIRCUIT OF HO2S HEATER (FRONT, RH) FOR OPEN CIRCUIT** • Disconnect PCM connector. • Check continuity between HO2S (Front, RH) terminal D (harness-side) and PCM terminal 93. • Is there any continuity?	Yes	Go to next step.
		No	Repair or replace harness for open circuit, then go to Step 9.
9	**VERIFY TROUBLESHOOTING OF DTC P0031 COMPLETED** • Make sure to reconnect all disconnected connectors. • Clear DTC from PCM memory using WDS or equivalent. • Start engine and warm it up completely. • Is same PENDING CODE of DTC present?	Yes	Replace PCM, then go to next step.
		No	Go to next step.
10	**VERIFY AFTER REPAIR PROCEDURE** • Perform “After Repair Procedure”. (See F4–110 AFTER REPAIR PROCEDURE.) • Is there any DTC present?	Yes	Go to applicable DTC inspection. (See F4–113 DTC TABLE.)
		No	Troubleshooting completed.

End Of Ste

DTC P0032

AME427001084W02

DTC P0032	HO2S heater (Front, RH) circuit high
DETECTION CONDITION	• The PCM monitors the HO2S heater (Front, RH) control signal at PCM terminal 93. If the PCM turns the front heater (RH) on but front heater (RH) circuit has high voltage, the PCM determines that the HO2S heater (Front, RH) circuit has malfunction. **Note** • The HO2S heater (Front, RH) is controlled by a duty signal. **Diagnostic support note** • This is a continuous monitor (O_2 sensor heater). • MIL illuminates if PCM detects the above malfunction condition in two consecutive drive cycles. • PENDING CODE is available if PCM detects the above malfunction condition during first drive cycle. • FREEZE FRAME DATA is available. • DTC is stored in PCM memory.
POSSIBLE CAUSE	• Short to power circuit between HO2S (Front, RH) terminal D and PCM terminal 93 • Shorts HO2S (Front, RH) or PCM terminal • PCM malfunction

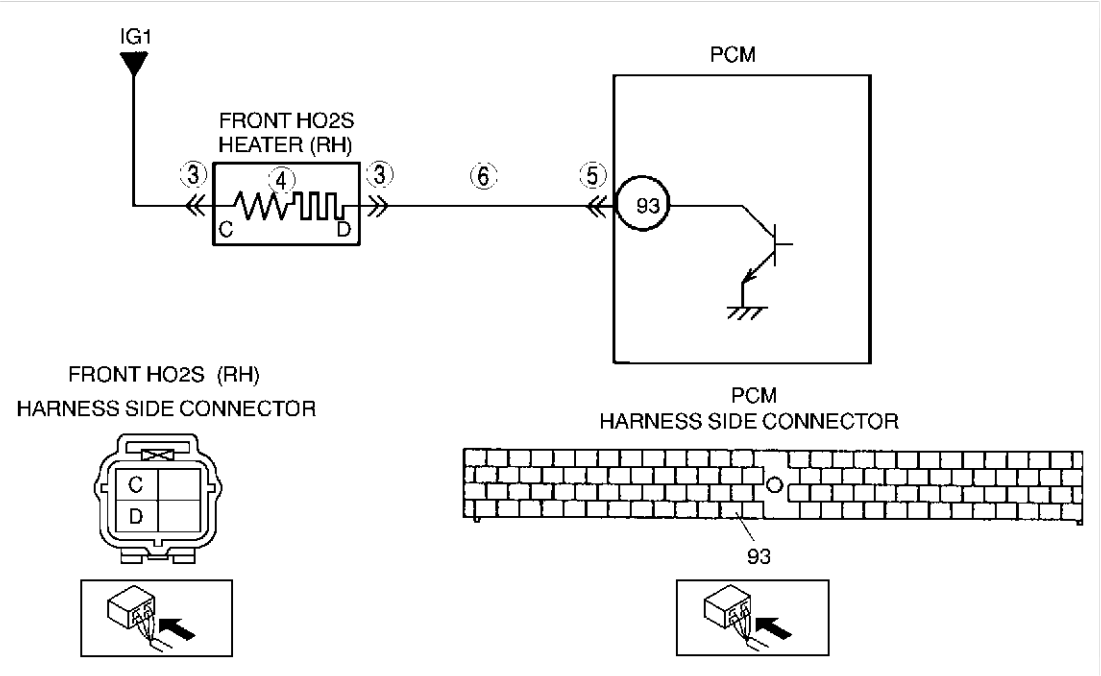

Diagnostic procedure

STEP	INSPECTION		ACTION
1	**VERIFY FREEZE FRAME DATA HAS BEEN RECORDED** • Has FREEZE FRAME DATA been recorded?	Yes	Go to next step.
		No	Record FREEZE FRAME DATA on repair order, then go to next step.
2	**VERIFY RELATED SERVICE INFORMATION AVAILABILITY** • Check for related Service Information availability. • Is any related Service Information available?	Yes	Perform repair or diagnosis according to available Service Information. • If vehicle is not repaired, go to next step.
		No	Go to next step.
3	**INSPECT HO2S (FRONT, RH) TERMINALS** • Turn ignition key to OFF. • Disconnect HO2S (Front, RH) connector. • Check for bent terminals. • Is there any malfunction?	Yes	Repair or replace terminal, then go to Step 7.
		No	Go to next step.
4	**INSPECT HO2S HEATER (FRONT, RH)** • Inspect HO2S heater (front, RH). (See F4–105 HEATED OXYGEN SENSOR (HO2S) INSPECTION) • Is HO2S heater (front, RH) okay?	Yes	Go to next step.
		No	Replace the HO2S (Front, RH), then go to Step 7.
5	**INSPECT PCM TERMINAL** • Disconnect PCM connector. • Check for bent terminals. • Are there any malfunctions?	Yes	Repair terminal, then go to Step 7.
		No	Go to next step.
6	**INSPECT HO2S (FRONT, RH) HEATER CONTROL CIRCUIT FOR SHORT TO POWER CIRCUIT** • Turn ignition key to ON (Engine OFF). • Measure voltage between HO2S (Front, RH) terminal D (harness-side) and body ground. • Is there voltage **B+**?	Yes	Repair or replace harness for shot to power circuit, then go to next step.
		No	Go to next step.
7	**VERIFY TROUBLESHOOTING OF DTC P0032 COMPLETED** • Make sure to reconnect all disconnected connectors. • Clear DTC from PCM memory using WDS or equivalent. • Start engine and warm it up completely. • Is PENDING CODE of same DTC present?	Yes	Replace PCM, then go to next step.
		No	Go to next step.
8	**VERIFY AFTER REPAIR PROCEDURE** • Perform “After Repair Procedure”. (See F4–110 AFTER REPAIR PROCEDURE.) • Is there any DTC present?	Yes	Go to applicable DTC inspection. (See F4–113 DTC TABLE.)
		No	Troubleshooting completed.

End Of Sta

DTC P0037

AME427001084W03

European (L.H.D.) Specs.

DTC P0037	HO2S heater (Rear, RH) circuit low
DETECTION CONDITION	• The PCM monitors the HO2S heater (Rear, RH) control signal at PCM terminal 95. If the PCM turns the HO2S heater (Rear, RH) off but HO2S heater (Rear, RH) circuit has low voltage, the PCM determines that the HO2S heater (Rear, RH) circuit has malfunction. **Diagnostic support note** • This is a continuous monitor (O_2 sensor heater). • MIL illuminates if PCM detects the above malfunction condition in two consecutive drive cycles. • PENDING CODE is available if PCM detects the above malfunction condition during first drive cycle. • FREEZE FRAME DATA is available. • DTC is stored in PCM memory.
POSSIBLE CAUSE	• HO2S (Rear, RH) malfunction • Open circuit between the main relay terminal D and HO2S (Rear, RH) terminal C • Open circuit between the HO2S (Rear, RH) terminal D and PCM terminal 95 • Short to ground circuit between HO2S (Rear, RH) terminal D and PCM terminal 95 • Poor connection at HO2S (Rear, RH) or PCM connector • PCM malfunction

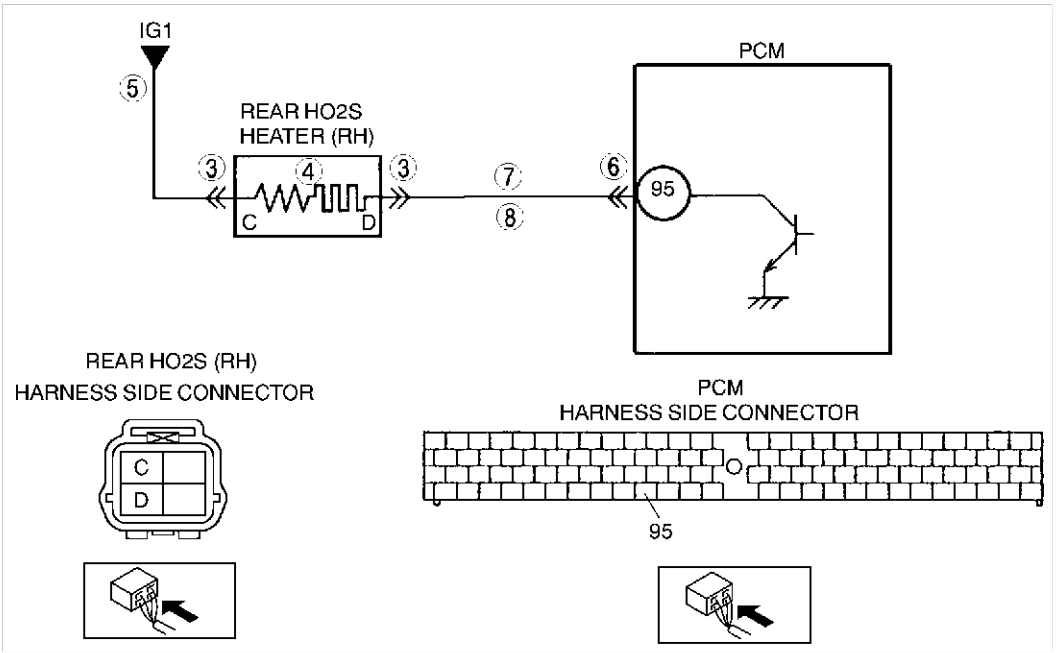

Diagnostic procedure

STEP	INSPECTION		ACTION
1	**VERIFY FREEZE FRAME DATA HAS BEEN RECORDED** • Has FREEZE FRAME DATA been recorded?	Yes	Go to next step.
		No	Record FREEZE FRAME DATA on repair order, then go to next step.
2	**VERIFY RELATED SERVICE INFORMATION AVAILABILITY** • Check for related Service Information availability. • Is any related Service Information available?	Yes	Perform repair or diagnosis according to available Service Information. • If vehicle is not repaired, go to next step.
		No	Go to next step.

STEP	INSPECTION		ACTION
3	**INSPECT HO2S (REAR, RH) CONNECTOR FOR POOR CONNECTION** • Turn ignition key to OFF. • Disconnect HO2S (Rear, RH) connector. • Check for poor connection (damaged, pulled-out pins, corrosion, etc.). • Are there any malfunctions?	Yes	Repair or replace terminal, then go to Step 9.
		No	Go to next step.
4	**INSPECT HO2S HEATER (REAR, RH)** • Inspect HO2S heater (rear, RH). (See F4–105 HEATED OXYGEN SENSOR (HO2S) INSPECTION) • Is HO2S heater (rear, RH) okay?	Yes	Go to next step.
		No	Replace the HO2S (Rear, RH), then go to Step 9.
5	**INSPECT HO2S HEATER (REAR, RH) POWER CIRCUIT FOR OPEN CIRCUIT** • Turn ignition key to ON (Engine OFF). • Measure voltage between HO2S (Rear, RH) terminal C (harness-side) and body ground. • Is there voltage **B+**?	Yes	Go to next step.
		No	Repair or replace harness for open circuit, then go to Step 9.
6	**INSPECT PCM CONNECTOR FOR POOR CONNECTION** • Turn ignition key to OFF. • Disconnect PCM connector. • Check for poor connection (damaged, pulled-out pins, corrosion, etc.). • Are there any malfunctions?	Yes	Repair terminal, then go to Step 9.
		No	Go to next step.
7	**INSPECT HO2S HEATER (REAR, RH) CONTROL CIRCUIT FOR SHORT TO GROUND** • Check continuity between HO2S (Rear, RH) terminal D (harness-side) and body ground. • Is there any continuity?	Yes	Repair or replace harness for short to ground, then go to Step 9.
		No	Go to next step.
8	**INSPECT HO2S HEATER (REAR, RH) CONTROL CIRCUIT FOR OPEN CIRCUIT** • Disconnect PCM connector. • Check continuity between HO2S (Rear, RH) terminal D (harness-side) and PCM terminal 95. • Is there any continuity?	Yes	Go to next step.
		No	Repair or replace harness for open circuit, then go to Step 9.
9	**VERIFY TROUBLESHOOTING OF DTC P0037 COMPLETED** • Make sure to reconnect all disconnected connectors. • Clear DTC from PCM memory using WDS or equivalent. • Start engine and warm it up completely. • Is PENDING CODE of same DTC present?	Yes	Replace PCM, then go to next step.
		No	Go to next step.
10	**VERIFY AFTER REPAIR PROCEDURE** • Perform “After Repair Procedure”. (See F4–110 AFTER REPAIR PROCEDURE.) • Is there any DTC present?	Yes	Go to applicable DTC inspection. (See F4–113 DTC TABLE.)
		No	Troubleshooting completed.

End Of Sta

DTC P0038

AME427001084W04

European (L.H.D.) Specs.

DTC P0038	HO2S heater (Rear, RH) circuit high
DETECTION CONDITION	• The PCM monitors the HO2S heater (Rear, RH) control signal at PCM terminal 95. If the PCM turns the HO2S heater (Rear, RH) on but HO2S heater (Rear, RH) circuit has high voltage, the PCM determines that the HO2S heater (Rear, RH) circuit has malfunction. **Diagnostic support note** • This is a continuous monitor (O_2 sensor heater). • MIL illuminates if PCM detects the above malfunction condition in two consecutive drive cycles. • PENDING CODE is available if PCM detects the above malfunction condition during first drive cycle. • FREEZE FRAME DATA is available. • DTC is stored in PCM memory.
POSSIBLE CAUSE	• Short to power circuit between HO2S (Rear, RH) terminal D and PCM terminal 95 • Shorts HO2S (Rear, RH) or PCM terminal • PCM malfunction

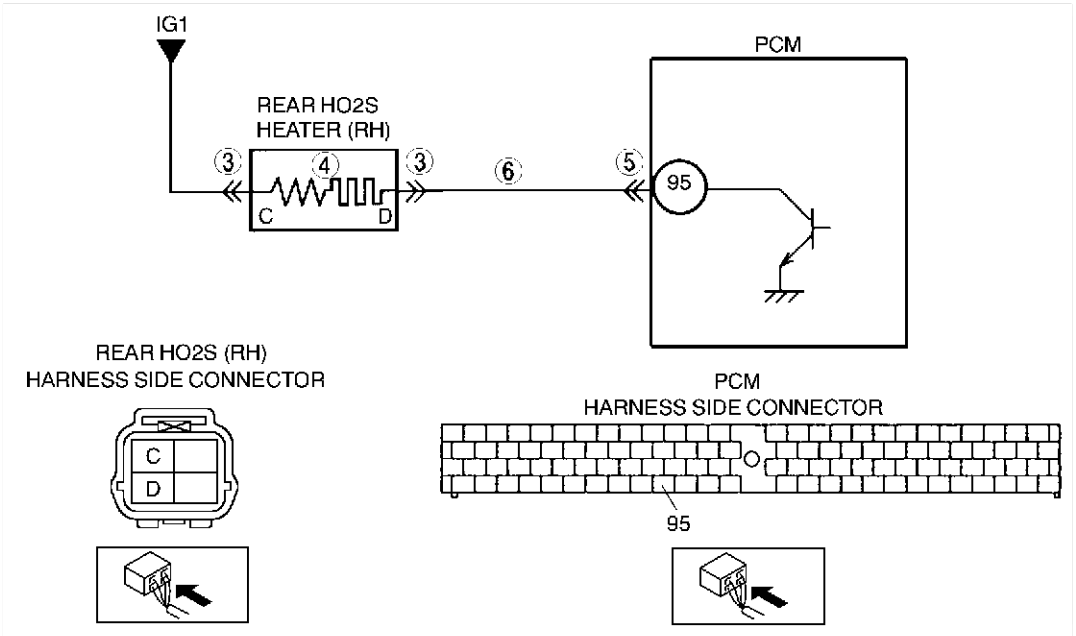

Diagnostic procedure

STEP	INSPECTION		ACTION
1	**VERIFY FREEZE FRAME DATA HAS BEEN RECORDED** • Has FREEZE FRAME DATA been recorded?	Yes	Go to next step.
		No	Record FREEZE FRAME DATA on repair order, then go to next step.
2	**VERIFY RELATED SERVICE INFORMATION AVAILABILITY** • Check for related Service Information availability. • Is any related Service Information available?	Yes	Perform repair or diagnosis according to available Service Information. • If vehicle is not repaired, go to next step.
		No	Go to next step.
3	**INSPECT HO2S (REAR, RH) TERMINAL** • Turn ignition key to OFF. • Disconnect HO2S (Rear, RH) connector. • Check for bent terminals • Is there any malfunction?	Yes	Repair or replace terminal, then go to Step 7.
		No	Go to next step.
4	**INSPECT HO2S HEATER (REAR, RH)** • Inspect HO2S heater (rear, RH). (See F4–105 HEATED OXYGEN SENSOR (HO2S) INSPECTION) • Is HO2S heater (rear, RH) okay?	Yes	Go to next step.
		No	Replace the HO2S (rear, RH), then go to Step 7.
5	**INSPECT PCM TERMINAL** • Disconnect PCM connector. • Check for bent terminals. • Is there any malfunctions?	Yes	Repair terminal, then go to Step 7.
		No	Go to next step.
6	**INSPECT HO2S HEATER (REAR, RH) CONTROL CIRCUIT FOR SHORT TO POWER** • Turn ignition key to ON (Engine OFF). • Measure voltage between HO2S (Rear, RH) terminal D (harness-side) and body ground. • Is there voltage **B+**?	Yes	Repair or replace harness for shot to power circuit, then go to next step.
		No	Go to next step.
7	**VERIFY TROUBLESHOOTING OF DTC P0038 COMPLETED** • Make sure to reconnect all disconnected connectors. • Clear DTC from PCM memory using WDS or equivalent. • Start engine and warm it up completely. • Is PENDING CODE of same DTC present?	Yes	Replace PCM, then go to next step.
		No	Go to next step.
8	**VERIFY AFTER REPAIR PROCEDURE** • Perform “After Repair Procedure”. (See F4–110 AFTER REPAIR PROCEDURE.) • Is there any DTC present?	Yes	Go to applicable DTC inspection. (See F4–113 DTC TABLE.)
		No	Troubleshooting completed.

End Of Ste

DTC P0051

AME427001084W05

DTC P0051	HO2S heater (Front, LH) circuit low
DETECTION CONDITION	• The PCM monitors the HO2S heater (Front, LH) control signal at PCM terminal 94. If the PCM turns the HO2S heater (Front, LH) off but HO2S heater (Front, LH) circuit has low voltage, the PCM determines that the HO2S heater (Front, LH) circuit has malfunction. **Note** • The HO2S heater (Front, LH) is controlled by a duty signal. **Diagnostic support note** • This is a continuous monitor (O_2 sensor heater). • MIL illuminates if PCM detects the above malfunction condition in two consecutive drive cycles. • PENDING CODE is available if PCM detects the above malfunction condition during first drive cycle. • FREEZE FRAME DATA is available. • DTC is stored in PCM memory.
POSSIBLE CAUSE	• HO2S (Front, LH) malfunction • Open circuit between the main relay terminal D and HO2S (Front, LH) terminal A • Open circuit between the HO2S (Front, LH) terminal B and PCM terminal 94 • Short to ground circuit between HO2S (Front, LH) terminal B and PCM terminal 94 • PCM malfunction

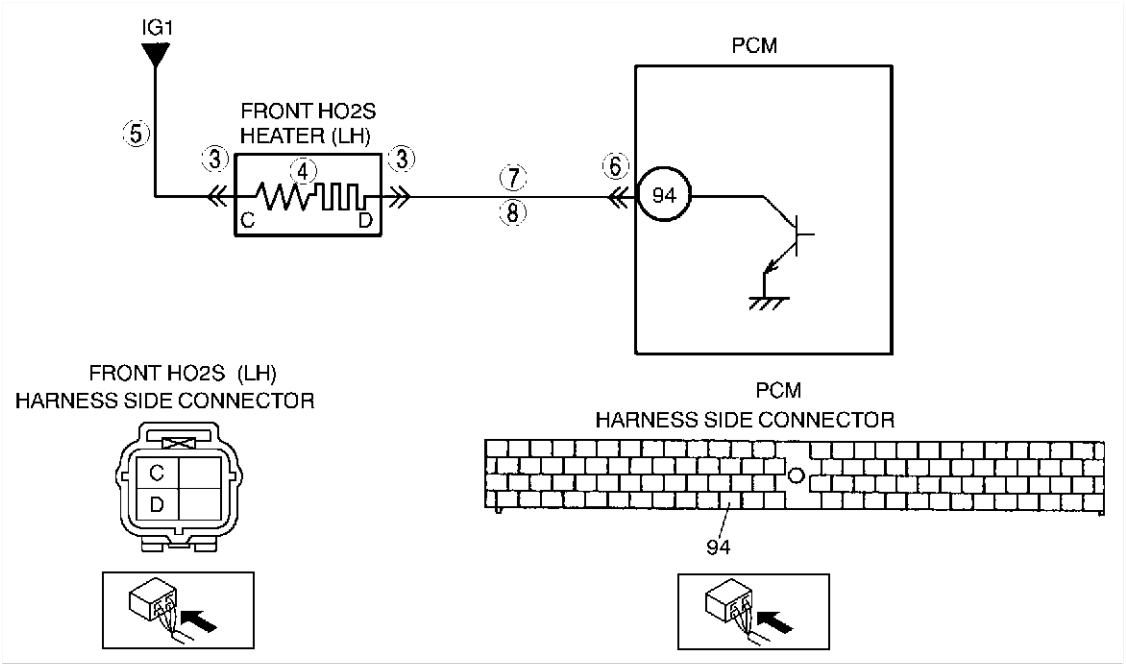

Diagnostic procedure

STEP	INSPECTION		ACTION
1	**VERIFY FREEZE FRAME DATA HAS BEEN RECORDED** • Has FREEZE FRAME DATA been recorded?	Yes	Go to next step.
		No	Record FREEZE FRAME DATA on repair order, then go to next step.
2	**VERIFY RELATED SERVICE INFORMATION AVAILABILITY** • Check for related Service Information availability. • Is any related Service Information available?	Yes	Perform repair or diagnosis according to available Service Information. • If vehicle is not repaired, go to next step.
		No	Go to next step.

STEP	INSPECTION		ACTION
3	**INSPECT HO2S (FRONT, LH) CONNECTOR FOR POOR CONNECTION** • Turn ignition key to OFF. • Disconnect HO2S (Front, LH) connector. • Check for poor connection (damaged, pulled-out pins, corrosion, etc.). • Are there any malfunctions?	Yes	Repair or replace terminal, then go to Step 9.
		No	Go to next step.
4	**INSPECT HO2S HEATER (FRONT, LH)** • Inspect HO2S heater (front, LH). (See F4–105 HEATED OXYGEN SENSOR (HO2S) INSPECTION) • Is HO2S heater (front, LH) okay?	Yes	Go to next step.
		No	Replace the HO2S (Front, LH), then go to Step 9.
5	**INSPECT HO2S HEATER (FRONT, LH) POWER CIRCUIT FOR OPEN CIRCUIT** • Turn ignition key to ON (Engine OFF). • Measure voltage between HO2S (Front, LH) terminal A (harness-side) and body ground. • Is there voltage **B+**?	Yes	Go to next step.
		No	Repair or replace harness for open circuit, then go to Step 9.
6	**INSPECT PCM CONNECTOR FOR POOR CONNECTION** • Turn ignition key to OFF. • Disconnect PCM connector. • Check for poor connection (damaged, pulled-out pins, corrosion, etc.). • Are there any malfunctions?	Yes	Repair terminal, then go to Step 9.
		No	Go to next step.
7	**INSPECT HO2S HEATER (FRONT, LH) CONTROL CIRCUIT FOR SHORT TO GROUND** • Check continuity between HO2S (Front, LH) terminal B (harness-side) and body ground. • Is there any continuity?	Yes	Repair or replace harness for short to ground, then go to Step 9.
		No	Go to next step.
8	**INSPECT HO2S HEATER (FRONT, LH) CONTROL CIRCUIT FOR OPEN CIRCUIT** • Disconnect PCM connector. • Check continuity between HO2S (Front, LH) terminal B (harness-side) and PCM terminal 94. • Is there any continuity?	Yes	Go to next step.
		No	Repair or replace harness for open circuit, then go to Step 9.
9	**VERIFY TROUBLESHOOTING OF DTC P0051 COMPLETED** • Make sure to reconnect all disconnected connectors. • Clear DTC from PCM memory using WDS or equivalent. • Start engine and warm it up completely. • Is PENDING CODE of same DTC present?	Yes	Replace PCM, then go to next step.
		No	Go to next step.
10	**VERIFY AFTER REPAIR PROCEDURE** • Perform “After Repair Procedure”. (See F4–110 AFTER REPAIR PROCEDURE.) • Is there any DTC present?	Yes	Go to applicable DTC inspection. (See F4–113 DTC TABLE.)
		No	Troubleshooting completed.

End Of Sie

DTC P0052

AME427001084W06

DTC P0052	HO2S heater (Front, LH) circuit high
DETECTION CONDITION	• The PCM monitors the HO2S heater (Front, LH) control signal at PCM terminal 94. If the PCM turns the front heater (LH) on but front heater (LH) circuit has high voltage, the PCM determines that the HO2S heater (Front, LH) circuit has malfunction. **Note** • The HO2S heater (Front, LH) is controlled by a duty signal. **Diagnostic support note** • This is a continuous monitor (O_2 sensor heater). • MIL illuminates if PCM detects the above malfunction condition in two consecutive drive cycles. • PENDING CODE is available if PCM detects the above malfunction condition during first drive cycle. • FREEZE FRAME DATA is available. • DTC is stored in PCM memory.
POSSIBLE CAUSE	• Short to power circuit between HO2S (Front, LH) terminal B and PCM terminal 94 • Shorts front HO2S or PCM terminal • PCM malfunction

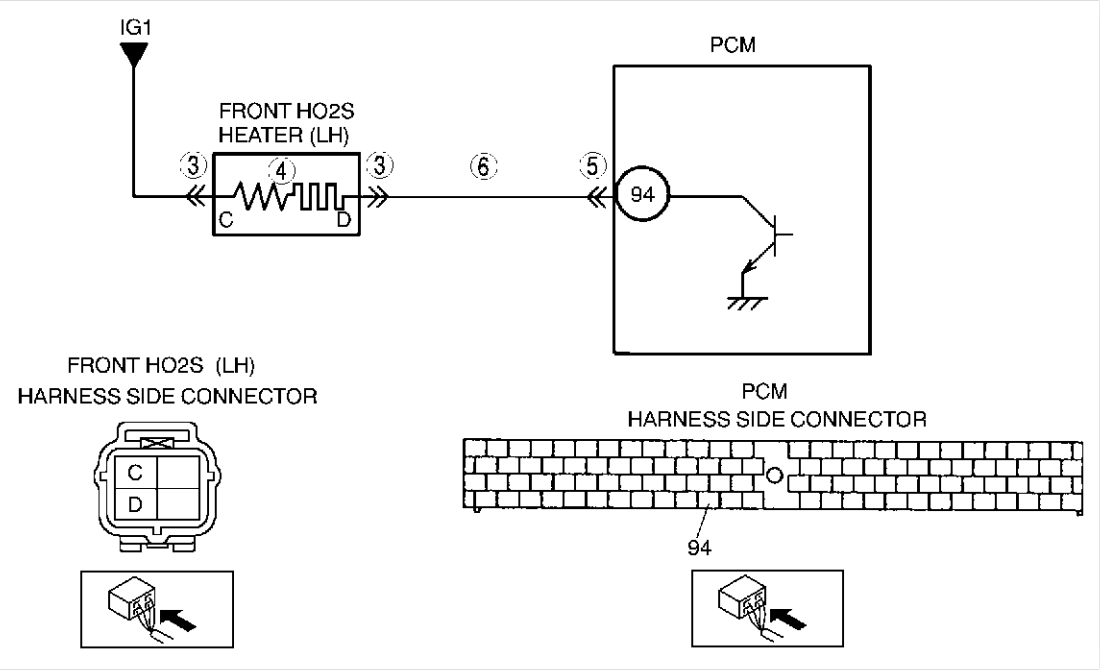

Diagnostic procedure

STEP	INSPECTION		ACTION
1	**VERIFY FREEZE FRAME DATA HAS BEEN RECORDED** • Has FREEZE FRAME DATA been recorded?	Yes	Go to next step.
		No	Record FREEZE FRAME DATA on repair order, then go to next step.
2	**VERIFY RELATED SERVICE INFORMATION AVAILABILITY** • Check for related Service Information availability. • Is any related Service Information available?	Yes	Perform repair or diagnosis according to available Service Information. • If vehicle is not repaired, go to next step.
		No	Go to next step.
3	**INSPECT HO2S (FRONT, LH) TERMINAL** • Turn ignition key to OFF. • Disconnect HO2S (Front, LH) connector. • Check for bent terminals. • Is there any malfunction?	Yes	Repair or replace terminal, then go to Step 7.
		No	Go to next step.
4	**INSPECT HO2S HEATER (FRONT, LH)** • Inspect HO2S heater (front, LH). (See F4–105 HEATED OXYGEN SENSOR (HO2S) INSPECTION) • Is HO2S heater (front, LH) okay?	Yes	Go to next step.
		No	Replace the HO2S (Front, LH), then go to Step 7.
5	**INSPECT PCM TERMINAL** • Disconnect PCM connector. • Check for bent terminals. • Is there any malfunction?	Yes	Repair terminal, then go to Step 7.
		No	Go to next step.
6	**INSPECT HO2S (FRONT, LH) HEATER CONTROL CIRCUIT FOR SHORT TO POWER CIRCUIT** • Turn ignition key to ON (Engine OFF). • Measure voltage between HO2S (Front, LH) terminal B (harness-side) and body ground. • Is there voltage **B+**?	Yes	Repair or replace harness for shot to power circuit, then go to next step.
		No	Go to next step.
7	**VERIFY TROUBLESHOOTING OF DTC P0052 COMPLETED** • Make sure to reconnect all disconnected connectors. • Clear DTC from PCM memory using WDS or equivalent. • Start engine and warm it up completely. • Is PENDING CODE of same DTC present?	Yes	Replace PCM, then go to next step.
		No	Go to next step.
8	**VERIFY AFTER REPAIR PROCEDURE** • Perform “After Repair Procedure”. (See F4–110 AFTER REPAIR PROCEDURE.) • Is there any DTC present?	Yes	Go to applicable DTC inspection. (See F4–113 DTC TABLE.)
		No	Troubleshooting completed.

End Of Sto

DTC P0057

AME427001084W07

European (L.H.D.) Specs.

DTC P0057	HO2S heater (Rear, LH) circuit low
DETECTION CONDITION	• The PCM monitors the HO2S heater (Rear, LH) control signal at PCM terminal 96. If the PCM turns the HO2S heater (Rear, LH) off but HO2S heater (Rear, LH) circuit has low voltage, the PCM determines that the HO2S heater (Rear, LH) circuit has malfunction. **Diagnostic support note** • This is a continuous monitor (O_2 sensor heater). • MIL illuminates if PCM detects the above malfunction condition in two consecutive drive cycles. • PENDING CODE is available if PCM detects the above malfunction condition during first drive cycle. • FREEZE FRAME DATA is available. • DTC is stored in PCM memory.
POSSIBLE CAUSE	• HO2S heater (Rear, LH) malfunction • Open circuit between the main relay terminal D and HO2S (Rear, LH) terminal A • Open circuit between the HO2S (Rear, LH) terminal B and PCM terminal 96 • Short to ground circuit between HO2S (Rear, LH) terminal B and PCM terminal 96 • Poor connection at HO2S (Rear, LH) or PCM connector • PCM malfunction

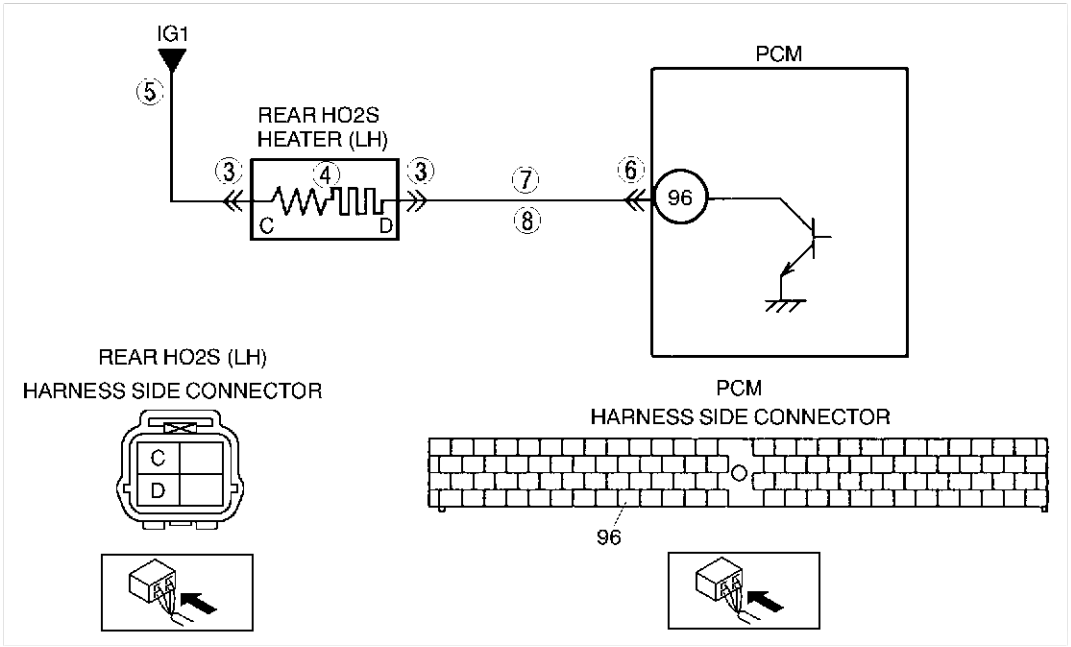

Diagnostic procedure

STEP	INSPECTION		ACTION
1	**VERIFY FREEZE FRAME DATA HAS BEEN RECORDED** • Has FREEZE FRAME DATA been recorded?	Yes	Go to next step.
		No	Record FREEZE FRAME DATA on repair order, then go to next step.
2	**VERIFY RELATED SERVICE INFORMATION AVAILABILITY** • Check for related Service Information availability. • Is any related Service Information available?	Yes	Perform repair or diagnosis according to available Service Information. • If vehicle is not repaired, go to next step.
		No	Go to next step.

STEP	INSPECTION		ACTION
3	**INSPECT HO2S (REAR, LH) CONNECTOR FOR POOR CONNECTION** • Turn ignition key to OFF. • Disconnect HO2S (Rear, LH) connector. • Check for poor connection (damaged, pulled-out pins, corrosion, etc.). • Are there any malfunctions?	Yes	Repair or replace terminal, then go to Step 9.
		No	Go to next step.
4	**INSPECT HO2S HEATER (REAR, LH)** • Inspect HO2S heater (rear, LH). (See F4–105 HEATED OXYGEN SENSOR (HO2S) INSPECTION) • Is HO2S heater (rear, LH) okay?	Yes	Go to next step.
		No	Replace the HO2S (Rear, LH), then go to Step 9.
5	**INSPECT HO2S HEATER (REAR, LH) POWER CIRCUIT FOR OPEN CIRCUIT** • Turn ignition key to ON (Engine OFF). • Measure voltage between HO2S (Rear) terminal A (harness-side) and body ground. • Is there voltage **B+**?	Yes	Go to next step.
		No	Repair or replace harness for open circuit, then go to Step 9.
6	**INSPECT PCM CONNECTOR FOR POOR CONNECTION** • Turn ignition key to OFF. • Disconnect PCM connector. • Check for poor connection (damaged, pulled-out pins, corrosion, etc.). • Are there any malfunctions?	Yes	Repair or replace terminal, then go to Step 9.
		No	Go to next step.
7	**INSPECT CONTROL CIRCUIT OF HO2S HEATER (REAR, LH) FOR SHORT TO GROUND** • Check continuity between HO2S (Rear, LH) terminal B (harness-side) and body ground. • Is there any continuity?	Yes	Repair or replace harness for short to ground, then go to Step 9.
		No	Go to next step.
8	**INSPECT HO2S HEATER (REAR, LH) CONTROL CIRCUIT FOR OPEN CIRCUIT** • Disconnect PCM connector. • Check continuity between HO2S (Rear, LH) terminal B (harness-side) and PCM terminal 96. • Is there any continuity?	Yes	Go to next step.
		No	Repair or replace harness for open circuit, then go to Step 9.
9	**VERIFY TROUBLESHOOTING OF DTC P0057 COMPLETED** • Make sure to reconnect all disconnected connectors. • Clear DTC from PCM memory using WDS or equivalent. • Start engine and warm it up completely. • Is PENDING CODE of same DTC present?	Yes	Replace PCM, then go to next step.
		No	Go to next step.
10	**VERIFY AFTER REPAIR PROCEDURE** • Perform “After Repair Procedure”. (See F4–110 AFTER REPAIR PROCEDURE.) • Is there any DTC present?	Yes	Go to applicable DTC inspection. (See F4–113 DTC TABLE.)
		No	Troubleshooting completed.

End Of Sta

DTC P0058

AME427001084W08

European (L.H.D.) Specs.

DTC P0058	HO2S heater (Rear, LH) circuit high
DETECTION CONDITION	• The PCM monitors the HO2S heater (Rear, LH) control signal at PCM terminal 96. If the PCM turns the HO2S heater (Rear, LH) on but rear heater circuit has high voltage, the PCM determines that the HO2S heater (Rear, LH) circuit has malfunction. **Diagnostic support note** • This is a continuous monitor (O_2 sensor heater). • MIL illuminates if PCM detects the above malfunction condition in two consecutive drive cycles. • PENDING CODE is available if PCM detects the above malfunction condition during first drive cycle. • FREEZE FRAME DATA is available. • DTC is stored in PCM memory.
POSSIBLE CAUSE	• Short to power circuit between HO2S (Rear, LH) terminal B and PCM terminal 96 • Shorts HO2S (Rear, LH) or PCM terminal • PCM malfunction

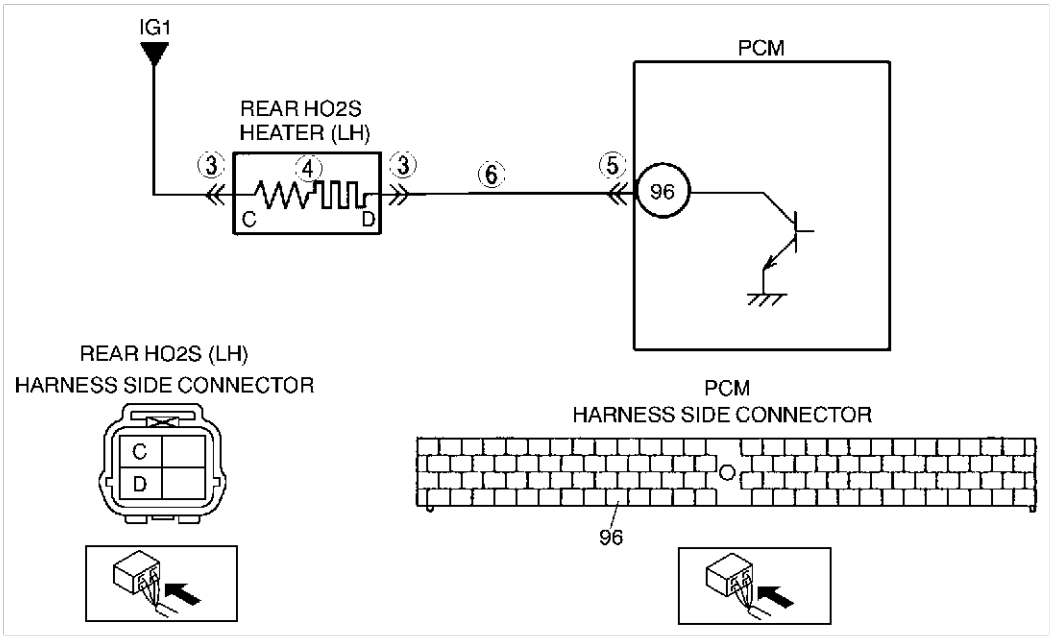

Diagnostic procedure

STEP	INSPECTION		ACTION
1	**VERIFY FREEZE FRAME DATA HAS BEEN RECORDED** • Has FREEZE FRAME DATA been recorded?	Yes	Go to next step.
		No	Record FREEZE FRAME DATA on repair order, then go to next step.
2	**VERIFY RELATED SERVICE INFORMATION AVAILABILITY** • Check for related Service Information availability. • Is any related Service Information available?	Yes	Perform repair or diagnosis according to available Service Information. • If vehicle is not repaired, go to next step.
		No	Go to next step.
3	**INSPECT HO2S (REAR, LH) TERMINAL** • Turn ignition key to OFF. • Disconnect HO2S (Rear, LH) connector. • Check for bent terminals. • Is there any malfunction?	Yes	Repair or replace terminal, then go to Step 7.
		No	Go to next step.
4	**INSPECT HO2S HEATER (REAR, LH)** • Inspect HO2S heater (rear, LH). (See F4–105 HEATED OXYGEN SENSOR (HO2S) INSPECTION) • Is HO2S heater (rear, LH) okay?	Yes	Go to next step.
		No	Replace the HO2S (Rear, LH), then go to Step 7.
5	**INSPECT PCM TERMINAL** • Disconnect PCM connector. • Check for bent terminals. • Is there any malfunction?	Yes	Repair terminal, then go to Step 7.
		No	Go to next step.
6	**INSPECT HO2S (REAR, LH) HEATER CONTROL CIRCUIT FOR SHORT TO POWER CIRCUIT** • Turn ignition key to ON (Engine OFF). • Measure voltage between HO2S (Rear, LH) terminal B (harness-side) and body ground. • Is there voltage **B+**?	Yes	Repair or replace harness for shot to power circuit, then go to next step.
		No	Go to next step.
7	**VERIFY TROUBLESHOOTING OF DTC P0058 COMPLETED** • Make sure to reconnect all disconnected connectors. • Clear DTC from PCM memory using WDS or equivalent. • Start engine and warm it up completely. • Is PENDING CODE of same DTC present?	Yes	Replace or repair PCM, go to next step.
		No	Go to next step.
8	**VERIFY AFTER REPAIR PROCEDURE** • Perform “After Repair Procedure”. (See F4–110 AFTER REPAIR PROCEDURE.) • Is there any DTC present?	Yes	Go to applicable DTC inspection. (See F4–113 DTC TABLE.)
		No	Troubleshooting completed.

End Of Sta

DTC P0101

AME427001084W09

DTC P0101	**MAF sensor inconsistent with TP sensor (lower than expected) or engine speed (greater than expected)**
DETECTION CONDITION	• PCM compares actual input signal from MAF sensor with expected input signal from MAF sensor which PCM calculates by input voltage from throttle position sensor or engine speed. — If mass intake air flow amount is **below 8.93 g/s {1.18 lb/min.}** for **5 s** and throttle opening angle is **above 50%** with engine running, PCM determines that detected mass intake air flow amount is too low. — If mass intake air flow amount is **above 103 g/s {13.6 lb/min.}** for **5 s** and engine speed is **below 2,000 rpm** with engine running, PCM determines that detected mass intake air flow amount is too high. **Diagnostic support note** • This is a continuous monitor (CCM). • MIL illuminates if PCM detects the above malfunction condition in two consecutive drive cycles. • PENDING CODE is available if PCM detects the above malfunction condition during first drive cycle. • FREEZE FRAME DATA is available. • DTC is stored in the PCM memory.
POSSIBLE CAUSE	• MAF sensor malfunction • TP sensor malfunction • Electrical corrosion in MAF signal circuit • Electrical corrosion in MAF RETURN circuit • Voltage drops in MAF signal circuit • Voltage drops in ground circuit

Diagnostic procedure

STEP	INSPECTION		ACTION
1	**VERIFY FREEZE FRAME DATA HAS BEEN RECORDED** • Has FREEZE FRAME DATA been recorded?	Yes	Go to next step.
		No	Record FREEZE FRAME DATA on repair order, then go to next step.
2	**VERIFY RELATED SERVICE INFORMATION AVAILABILITY** • Check for related Service Information availability. • Is any related Service Information available?	Yes	Perform repair or diagnosis according to available Service Information. • If vehicle is not repaired, go to next step.
		No	Go to next step.
3	**VERIFY CURRENT INPUT SIGNAL STATUS-IS CONCERN INTERMITTENT OR CONSTANT** • Connect WDS or equivalent to DLC-2. • Start the engine. • Access ECT, TP and MAF PIDs. • Warm up the engine until ECT PID is **above 80 °C {176 °F}**. • Drive the vehicle. • Read MAF PID while TP PID is **above 50%**. • Is MAF PID reading **below 8.93 g/s {1.18 lb/min.}**?	Yes	Make sure that throttle position sensor resistance changes smoothly while gradually opens throttle valve. • If not, replace throttle position sensor and go to Step 7. • For others, then go to Step 4.
		No	Go to next step.
4	**VERIFY CURRENT INPUT SIGNAL STATUS-IS CONCERN INTERMITTENT OR CONSTANT** • Connect WDS or equivalent to DLC-2. • Start the engine. • Access ECT, MAF and RPM PIDs. • Warm-up engine until ECT PID is **above 70 °C {158 °F}**. • Read MAF PID while RPM PID is **below 2,000 rpm**. • Is MAF PID reading above **103 g/s {13.6 lb/min.}**?	Yes	Go to Step 8.
		No	Intermittent concern exists. Go to INTERMITTENT CONCERNS TROUBLESHOOTING procedure. (See F4–247 INTERMITTENT CONCERN TROUBLESHOOTING.)
5	**INSPECT MAF SENSOR CONNECTOR FOR POOR CONNECTION** • Turn ignition key to OFF. • Disconnect MAF/IAT sensor connector. • Check for poor connection (damaged, pulled-out terminals, corrosion, etc.). • Is there any malfunction?	Yes	Repair or replace suspected terminal or MAF/IAT sensor, then go to Step 7.
		No	Go to next step.

STEP	INSPECTION		ACTION
6	**INSPECT PCM CONNECTOR FOR POOR CONNECTION** • Disconnect PCM connector. • Check for poor connection (damaged/pulled-out pins, corrosion, etc.). • Is there any malfunction?	Yes	Repair terminal, then go to next step.
		No	Replace MAF/IAT sensor, then go to next step.
7	**VERIFY TROUBLESHOOTING OF DTC P0101 COMPLETED** • Make sure to reconnect all disconnected connectors. • Turn ignition key to ON (Engine OFF). • Clear DTC from memory using WDS or equivalent. • Start the engine. • Access ECT, TP and MAF PIDs. • Warm up the engine until ECT PID is reading **above 80°C {176°F}**. • Drive the vehicle and read TP and MAF PIDs. **Note** • Verify PIDs reading are within specifications **above 5 s**. — MAF PID: **above 8.93 g/s {1.18 lb/min.}** — TP PID: **above 50%** • Is same DTC present?	Yes	Replace PCM, then go to Step 11.
		No	Go to Step 11.
8	**CHECK MAF SENSOR TERMINALS FOR ELECTRICAL CORROSION** • Turn ignition key to OFF. • Disconnect MAF/IAT sensor connector. • Check for poor connection (damaged, pulled-out terminals, corrosion, etc.). • Is any problem corrosion found?	Yes	Repair or replace suspected terminal or MAF/IAT sensor, then go to Step 10.
		No	Go to next step.
9	**INSPECT PCM CONNECTOR FOR POOR CONNECTION** • Disconnect PCM connector. • Check for poor connection (damaged, pulled-out pins, corrosion, etc.). • Is there any malfunction?	Yes	Repair terminal, then go to next step.
		No	Go to next step.
10	**VERIFY TROUBLESHOOTING OF DTC P0101 COMPLETED** • Make sure to reconnect all disconnected connectors. • Turn ignition key to ON (Engine OFF). • Clear DTC from memory using WDS or equivalent. • Start the engine. • Warm-up engine until ECT PID is **above 70 °C {158 °F}**. • Read MAF and RPM PIDs. **Note** • MAF PID should indicate below **103 g/s {13.6 lb/min.}** while RPM PID is **below 2,000 rpm**. • Is pending code of same DTC present?	Yes	Replace PCM, then go to next step.
		No	Go to next step.
11	**VERIFY AFTER REPAIR PROCEDURE** • Perform “After Repair Procedure”. (See F4–110 AFTER REPAIR PROCEDURE.) • Is there any DTC present?	Yes	Go to applicable DTC inspection. (See F4–113 DTC TABLE.)
		No	Troubleshooting completed.

End Of Ste

F4

DTC P0102

AME427001084W10

DTC P0102	MAF circuit low input
DETECTION CONDITION	• PCM monitors input voltage from MAF sensor when engine is running. If input voltage at PCM terminal 88 is **below 0.24 V**, PCM determines that MAF circuit has a malfunction. **Diagnostic support note** • This is a continuous monitor (CCM). • MIL illuminates if PCM detects the above malfunction condition during first drive cycle. • PENDING CODE is not available. • FREEZE FRAME DATA is available. • DTC is stored in the PCM memory.
POSSIBLE CAUSE	• MAF sensor malfunction • Connector or terminal malfunction • Short to ground in wiring between MAF/IAT sensor terminal E and PCM terminal 88 • Open circuit in wiring between MAF/IAT sensor terminal E and PCM terminal 88 • Open circuit in wiring between main relay and MAF/IAT sensor terminal B

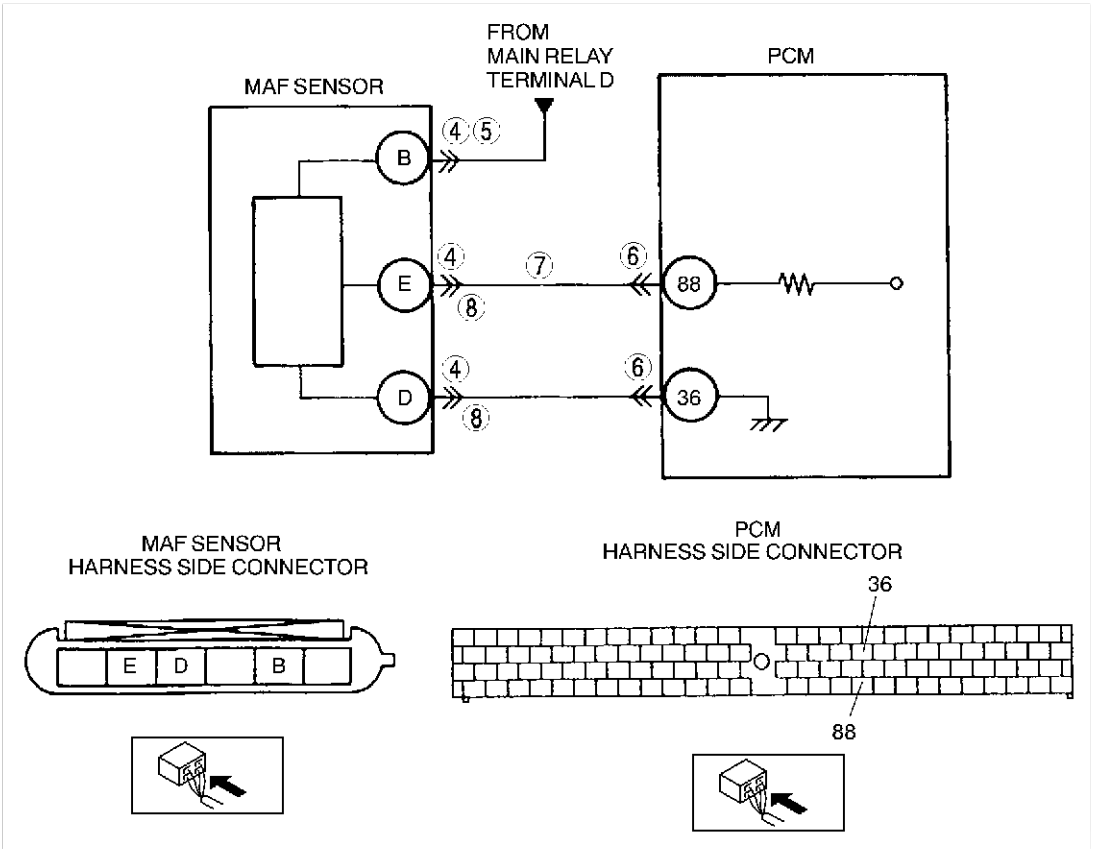

Diagnostic procedure

STEP	INSPECTION		ACTION
1	**VERIFY FREEZE FRAME DATA HAS BEEN RECORDED** • Has FREEZE FRAME DATA been recorded?	Yes	Go to next step.
		No	Record FREEZE FRAME DATA on repair order, then go to next step.
2	**VERIFY RELATED SERVICE INFORMATION AVAILABILITY** • Check for related Service Information availability. • Is any related Service Information available?	Yes	Perform repair or diagnosis according to available Service Information. • If vehicle is not repaired, go to next step.
		No	Go to next step.
3	**VERIFY CURRENT INPUT SIGNAL STATUS-IS CONCERN INTERMITTENT OR CONSTANT** • Connect WDS or equivalent to DLC-2. • Start engine. • Access MAF PID. • Is MAF PID **within 0.83—236 g/s {0.11 —31.2 lb/min.}**?	Yes	Intermittent concern exists. Go to INTERMITTENT CONCERNS TROUBLESHOOTING procedure. (See F4–247 INTERMITTENT CONCERN TROUBLESHOOTING.)
		No	Go to next step.

STEP	INSPECTION		ACTION
4	**INSPECT MAF SENSOR CONNECTOR FOR POOR CONNECTION** • Turn ignition key to OFF. • Disconnect the MAF/IAT sensor connector. • Check for poor connection (damaged, pulled-out terminals, corrosion, etc.). • Is there any malfunction?	Yes	Repair or replace terminals, then go to Step 9.
		No	Go to next step.
5	**CHECK POWER SUPPLY CIRCUIT FOR OPEN CIRCUIT** • Turn ignition key to ON (Engine OFF). • Check voltage at MAF/IAT sensor terminal B (harness-side). • Is there voltage **B+**?	Yes	Go to next step.
		No	Inspect for open circuit in wiring harness between MAF/IAT sensor terminal B (harness-side) and main relay. Repair or replace harness, then go to Step 9.
6	**INSPECT PCM CONNECTOR FOR POOR CONNECTION** • Turn ignition key to OFF. • Disconnect PCM connector. • Check for poor connection (damaged, pulled-out terminals, corrosion, etc.). • Is there any malfunction?	Yes	Repair terminal, then go to Step 9.
		No	Go to next step.
7	**INSPECT MAF SENSOR SIGNAL CIRCUIT FOR OPEN CIRCUIT** • Disconnect PCM connector. • Check for continuity between MAF/IAT sensor terminal E (harness-side) and PCM terminal 88 (harness-side). • Is there any continuity?	Yes	Go to next step.
		No	Repair or replace suspected harness, then go to Step 9.
8	**INSPECT MAF SENSOR SIGNAL CIRCUIT FOR SHORTS** • Check continuity between following circuits: — MAF/IAT sensor terminal E (harness-side) and body ground — MAF/IAT sensor connector terminal D (harness-side) and E (harness-side) • Are there any continuity?	Yes	Repair or replace suspected harness, then go to next step.
		No	Replace MAF/IAT sensor, then go to next step.
9	**VERIFY TROUBLESHOOTING OF DTC P0102 COMPLETED** • Make sure to reconnect all disconnected connectors. • Clear DTC from memory using WDS or equivalent. • Start engine. • Access MAF PID. **Note** • MAF PID should indicate **within 0.83—236 g/s {0.11 —31.2 lb/min.}**. • Is same DTC present?	Yes	Replace PCM, then go to next step.
		No	Go to next step.
10	**VERIFY AFTER REPAIR PROCEDURE** • Perform “After Repair Procedure”. (See F4–110 AFTER REPAIR PROCEDURE.) • Is there any DTC present?	Yes	Go to applicable DTC inspection. (See F4–113 DTC TABLE.)
		No	Troubleshooting completed.

End Of Ste

F4

DTC P0103

AME427001084W11

DTC P0103	MAF circuit high input
DETECTION CONDITION	• PCM monitors input voltage from TP sensor after ignition key is turned on. If input voltage at PCM terminal 88 is **above 4.8 V**, PCM determines that TP circuit has a malfunction. **Diagnostic support note** • This is a continuous monitor (CCM). • MIL illuminates if PCM detects the above malfunction condition during first drive cycle. • PENDING CODE is not available. • FREEZE FRAME DATA is available. • DTC is stored in the PCM memory.
POSSIBLE CAUSE	• MAF sensor malfunction • Connector or terminal malfunction • Open circuit in wiring between MAF/IAT sensor terminal D and PCM terminal 36 • Open circuit in MAF/IAT sensor ground circuit

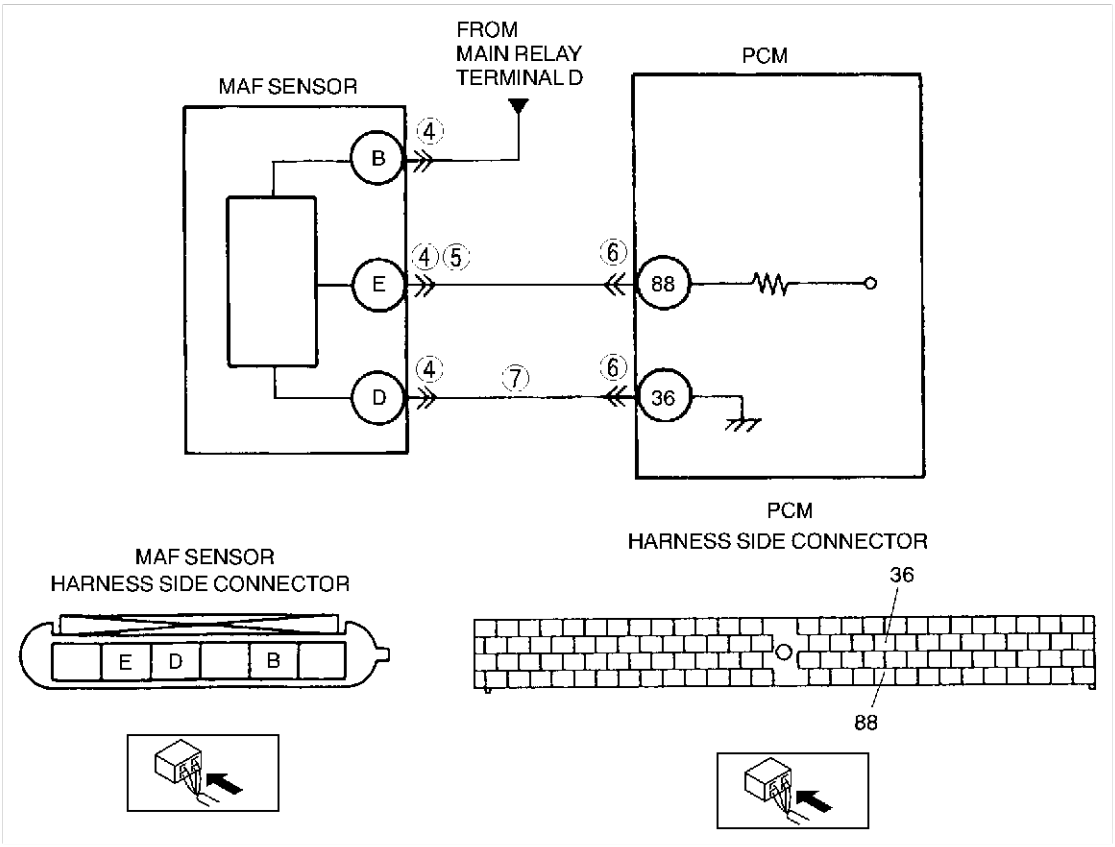

Diagnostic procedure

STEP	INSPECTION		ACTION
1	**VERIFY FREEZE FRAME DATA HAS BEEN RECORDED** • Has FREEZE FRAME DATA been recorded?	Yes	Go to next step.
		No	Record FREEZE FRAME DATA on repair order, then go to next step.
2	**VERIFY RELATED SERVICE INFORMATION AVAILABILITY** • Check for related Service Information availability. • Is any related Service Information available?	Yes	Perform repair or diagnosis according to available Service Information. • If vehicle is not repaired, go to next step.
		No	Go to next step.

STEP	INSPECTION		ACTION
3	**VERIFY CURRENT INPUT SIGNAL STATUS-IS CONCERN INTERMITTENT OR CONSTANT** • Connect WDS or equivalent to DLC-2. • Start engine. • Access MAF PID. • Is MAF PID **within 0.83—236 g/s {0.11 —31.2 lb/min.}**?	Yes	Intermittent concern exists. Go to INTERMITTENT CONCERNS TROUBLESHOOTING procedure. (See F4–247 INTERMITTENT CONCERN TROUBLESHOOTING.)
		No	Go to next step.
4	**INSPECT MAF SENSOR CONNECTOR FOR POOR CONNECTION** • Turn ignition key to OFF. • Disconnect the MAF/IAT sensor connector. • Check for poor connection (damaged, pulled-out terminals, corrosion, etc.). • Is there any malfunction?	Yes	Repair or replace terminals, then go to Step 8.
		No	Go to next step.
5	**INSPECT MAF SIGNAL CIRCUIT FOR SHORT TO POWER CIRCUIT** • Turn ignition key to ON (Engine OFF). • Measure voltage between MAF/IAT sensor terminal E (harness-side) and body ground. • Is there voltage **0 V**?	Yes	Go to next step.
		No	Repair or replace suspected harness, then go to Step 8.
6	**INSPECT PCM CONNECTOR FOR POOR CONNECTION** • Turn ignition key to OFF. • Disconnect PCM connector. • Check for poor connection (damaged, pulled-out terminals, corrosion, etc.). • Is there any malfunction?	Yes	Repair terminal, then go to Step 8.
		No	Go to next step.
7	**INSPECT MAF SENSOR GROUND CIRCUIT FOR OPEN CIRCUIT** • Disconnect PCM connector. • Check for continuity between MAF/IAT sensor terminal D (harness-side) and PCM terminal 36 (harness-side). • Is there any continuity?	Yes	Replace MAF/IAT sensor, then go to next step.
		No	Repair or replace suspected harness, then go to next step.
8	**VERIFY TROUBLESHOOTING OF DTC P0103 COMPLETED** • Make sure to reconnect all disconnected connectors. • Clear DTC from memory using WDS or equivalent. • Start engine. • Access MAF PID. **Note** • MAF PID should indicate **within 0.83—236 g/s {0.11 —31.2 lb/min.}**. • Is same DTC present?	Yes	Replace PCM, then go to next step.
		No	Go to next step.
9	**VERIFY AFTER REPAIR PROCEDURE** • Perform “After Repair Procedure”. (See F4–110 AFTER REPAIR PROCEDURE.) • Is there any DTC present?	Yes	Go to applicable DTC inspection. (See F4–113 DTC TABLE.)
		No	Troubleshooting completed.

End Of Ste

DTC P0106

AME427001084W12

Australian, General (L.H.D. R.H.D.) Specs.

DTC P0106	EGR boost sensor circuit performance problem
DETECTION CONDITION	• PCM monitors differences between intake manifold vacuum and atmospheric pressure at idle, which EGR boost sensor detects by switching EGR boost sensor solenoid. If difference is **below 6.43 kPa {48.2 mmHg, 1.90 inHg}**, PCM determines that there is a EGR boost sensor performance problem. **Diagnostic support note** • This is a continuous monitor (CCM). • MIL illuminates if PCM detects the above malfunction condition in two consecutive drive cycles. • PENDING CODE is available if PCM detects the above malfunction condition during first drive cycle. • FREEZE FRAME DATA is available. • DTC is stored in the PCM memory.
POSSIBLE CAUSE	• EGR boost sensor malfunction or substandard performance • EGR boost sensor solenoid malfunction • Loosed, damaged, misconnected, clogged or frozen moisture in vacuum hose from EGR boost sensor solenoid to EGR boost sensor • Loosed, damaged, misconnected, clogged or frozen moisture in vacuum hose from EGR boost sensor solenoid to EGR pipe

Diagnostic procedure

STEP	INSPECTION		ACTION
1	**VERIFY FREEZE FRAME DATA HAS BEEN RECORDED** • Has FREEZE FRAME DATA been recorded?	Yes	Go to next step.
		No	Record FREEZE FRAME DATA on repair order, then go to next step.
2	**VERIFY RELATED SERVICE INFORMATION AVAILABILITY** • Check for related Service Information availability. • Is any related Service Information available?	Yes	Perform repair or diagnosis according to available Service Information. • If vehicle is not repaired, go to next step.
		No	Go to next step.
3	**IDENTIFY TRIGGER DTC FOR FREEZE FRAME DATA** • Is DTC P0106 on FREEZE FRAME DATA?	Yes	Go to next step.
		No	Go to troubleshooting procedures for DTC on FREEZE FRAME DATA.
4	**INSPECT CONNECTION OF EGR BOOST SENSING RELATED VACUUM HOSES** • Inspect following vacuum hoses for loose, damage, improper connection and/or clog. — From EGR boost sensor to EGR boost sensor solenoid — From EGR boost sensor solenoid to EGR pipe • Are they okay?	Yes	Go to next step.
		No	Repair or replace vacuum hose, then go to Step 8.

STEP	INSPECTION		ACTION
5	**INSPECT EGR BOOST SENSOR SOLENOID AIR FILTER FOR CLOG** • Has EGR boost sensor solenoid air filter been clogged?	Yes	Repair air clogging, then go to Step 8.
		No	Go to next step.
6	**INSPECT EGR BOOST SENSOR SOLENOID FOR STUCK OPEN OR CLOSED** • Inspect EGR boost sensor solenoid. (See F4–87 EGR BOOST SENSOR SOLENOID VALVE INSPECTION.) • Is EGR boost sensor solenoid okay?	Yes	Go to next step.
		No	Replace EGR boost sensor solenoid, then go to Step 8.
7	**INSPECT EGR BOOST SENSOR FOR STUCK OPEN OR CLOSED** • Inspect EGR boost sensor. (See F4–104 BAROMETRIC PRESSURE SENSOR/EGR BOOST SENSOR INSPECTION.) • Is EGR boost sensor okay?	Yes	Go to next step.
		No	Replace EGR boost sensor, then go to next step.
8	**VERIFY TROUBLESHOOTING OF DTC P0106 COMPLETED** • Make sure to reconnect all disconnected connectors. • Turn ignition key to ON (Engine OFF). • Clear DTC from memory using WDS or equivalent. • Run PCM adaptive memory procedure drive mode and HO2S heater, HO2S, and EGR system repair verification drive mode. (See F4–110 OBD DRIVE MODE.) • Stop vehicle. • Is same DTC present?	Yes	Replace PCM, then go to next step.
		No	Go to next step.
9	**VERIFY AFTER REPAIR PROCEDURE** • Perform “After Repair Procedure”. (See F4–110 AFTER REPAIR PROCEDURE.) • Is there any DTC present?	Yes	Go to applicable DTC inspection. (See F4–113 DTC TABLE.)
		No	Troubleshooting completed.

End Of Ste

DTC P0107

AME427001084W13

DTC P0107	BARO sensor/EGR boost sensor circuit low input
DETECTION CONDITION	• PCM monitors input voltage from BARO sensor/EGR boost sensor when monitoring conditions are met. If input voltage at PCM terminal 34 is **below 0.2 V**, PCM determines that BARO sensor/EGR boost circuit is malfunctioning. **MONITORING CONDITION** — Intake air temperature is **above 10 °C {50 °F}**. — EGR boost sensor solenoid is turned OFF. (Barometric pressure is applied to EGR boost sensor.) (Australian, General (L.H.D. R.H.D.)) **Diagnostic support note** • This is a continuous monitor (CCM). • MIL illuminates if PCM detects the above malfunction condition during first drive cycle. • PENDING CODE is not available. • FREEZE FRAME DATA is available. • DTC is stored in the PCM memory.
POSSIBLE CAUSE	• BARO sensor/EGR boost sensor malfunction • Connector or terminal malfunction • Short to ground in wiring between BARO sensor/EGR boost sensor terminal B and PCM terminal 34 • Open circuit in wiring between BARO sensor/EGR boost sensor terminal C and PCM terminal 90 • PCM malfunction

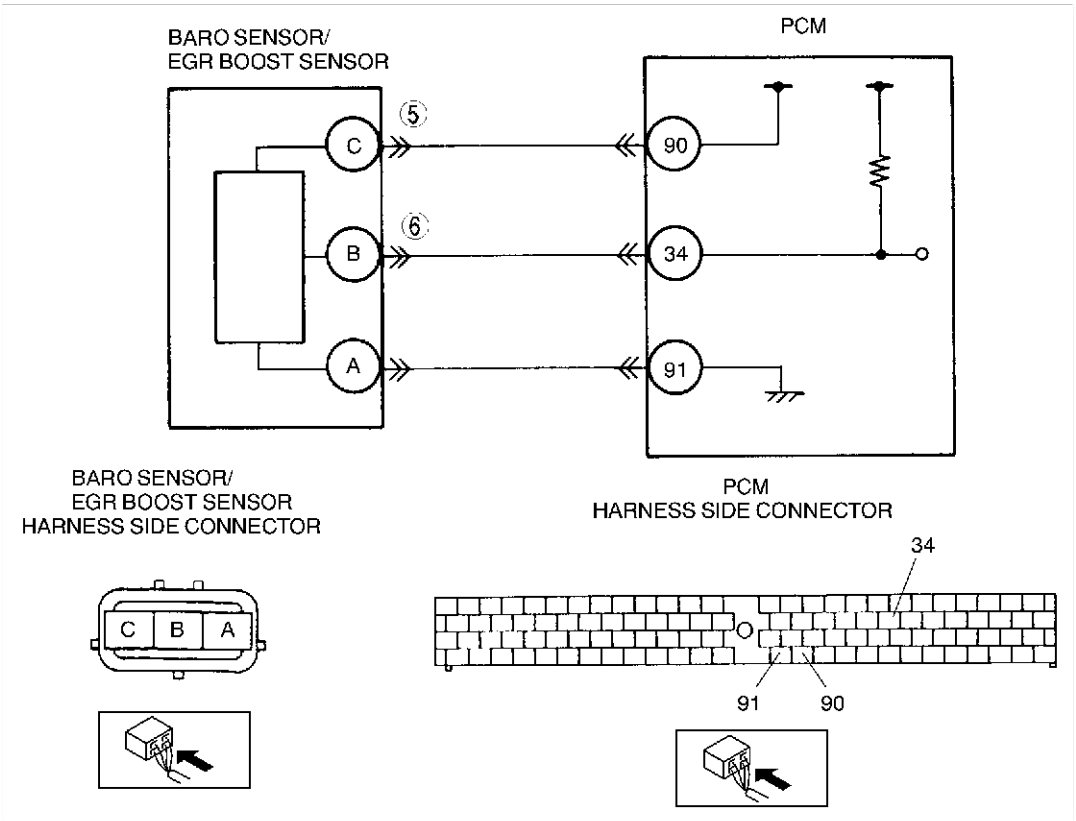

Diagnostic procedure

STEP	INSPECTION		ACTION
1	**VERIFY FREEZE FRAME DATA HAS BEEN RECORDED** • Has FREEZE FRAME DATA been recorded?	Yes	Go to next step.
		No	Record FREEZE FRAME DATA on repair order, then go to next step.
2	**VERIFY RELATED SERVICE INFORMATION AVAILABILITY** • Check for related Service Information availability. • Is any related Service Information available?	Yes	Perform repair or diagnosis according to available Service Information. • If vehicle is not repaired, go to next step.
		No	Go to next step.

STEP	INSPECTION		ACTION
3	**VERIFY CURRENT INPUT SIGNAL STATUS-IS CONCERN INTERMITTENT OR CONSTANT** • Connect WDS or equivalent to DLC-2. • Start engine. • Access BARO PID. • Is BARO PID **below 0.2 V**?	Yes	Go to next step.
		No	Intermittent concern exists. Go to INTERMITTENT CONCERNS TROUBLESHOOTING procedure. (See F4–247 INTERMITTENT CONCERN TROUBLESHOOTING.)
4	**VERIFY BARO PID WHEN EGR BOOST SENSOR CONNECTOR IS DISCONNECTED** • Disconnect BARO sensor/EGR boost sensor connector. • Is voltage **above 4.8 V**?	Yes	Go to next step.
		No	Go to step 6.
5	**CHECK POWER SUPPLY CIRCUIT VOLTAGE AT BARO SENSOR/EGR BOOST SENSOR CONNECTOR** **Note** • If DTC P0122 is also retrieved with P0107, then go to CONSTANT VOLTAGE troubleshooting procedure. • Turn ignition key to ON (Engine OFF). • Measure voltage between BARO sensor/EGR boost sensor terminal C (harness-side) and body ground. • Is there voltage **within 4.5—5.5 V?**	Yes	Check for poor connection of BARO sensor/EGR boost sensor terminal C (harness-side). • Repair or replace terminal as necessary. • If okay, replace BARO sensor/EGR boost sensor. Then go to Step 8.
		No	Check for open circuit between PCM terminal 90 (harness-side) and EGR boost sensor terminal C (harness-side). Repair or replace suspected harness, then go to Step 8.
6	**INSPECT BARO SENSOR/EGR BOOST SENSOR SIGNAL CIRCUIT FOR SHORT TO GROUND** • Turn ignition key to OFF. • Disconnect PCM connector. • Check continuity between BARO sensor/EGR boost sensor terminal B (harness-side) and body ground. • Is there any continuity?	Yes	Repair or replace suspected harness, then go to Step 8.
		No	Go to next step.
7	**INSPECT BARO SENSOR/EGR BOOST SENSOR SIGNAL AND GROUND CIRCUIT FOR SHORT TO EACH OTHER** • Check continuity between BARO sensor/EGR boost sensor terminals B and A (harness-side). • Is there continuity?	Yes	Repair or replace suspected harness, then go to next step.
		No	Go to next step.
8	**VERIFY TROUBLESHOOTING OF DTC P0107 COMPLETED** • Make sure to reconnect all disconnected connectors. • Turn ignition key to ON (Engine OFF). • Clear DTC from memory using WDS or equivalent. • Start engine. • Access IAT PIDs using WDS or equivalent. • Make sure that IAT PID is **above 10 °C {50 °F}** • Is same DTC present?	Yes	Replace PCM, then go to next step.
		No	Go to next step.
9	**VERIFY AFTER REPAIR PROCEDURE** • Perform “After Repair Procedure”. (See F4–110 AFTER REPAIR PROCEDURE.) • Is there any DTC present?	Yes	Go to applicable DTC inspection. (See F4–113 DTC TABLE.)
		No	Troubleshooting completed.

End Of Sie

DTC P0108

AME427001084W14

DTC P0108	BARO sensor/EGR boost sensor circuit high input
DETECTION CONDITION	• PCM monitors input voltage from BARO sensor/EGR boost sensor when monitoring conditions are met. If input voltage at PCM terminal 34 is **above 4.8 V**, PCM determines that BARO sensor/EGR boost sensor circuit is malfunctioning. **MONITORING CONDITION** — Intake air temperature is **above 10 °C {50 °F}**. — EGR boost sensor solenoid is turned OFF. (Barometric pressure is applied to EGR boost sensor.) (Australian, General (L.H.D. R.H.D.)) **Diagnostic support note** • This is a continuous monitor (CCM). • MIL illuminates if PCM detects the above malfunction condition during first drive cycle. • PENDING CODE is not available. • FREEZE FRAME DATA is available. • DTC is stored in the PCM memory.
POSSIBLE CAUSE	• BARO sensor/EGR boost sensor malfunction • Connector or terminal malfunction • Open circuit in wiring between BARO sensor/EGR boost sensor terminal A and PCM terminal 91 • Open circuit in wiring between BARO sensor/EGR boost sensor terminal B and PCM terminal 34 • BARO sensor/EGR boost sensor signal circuit shorts to constant voltage (Vref) supply circuit • PCM malfunction

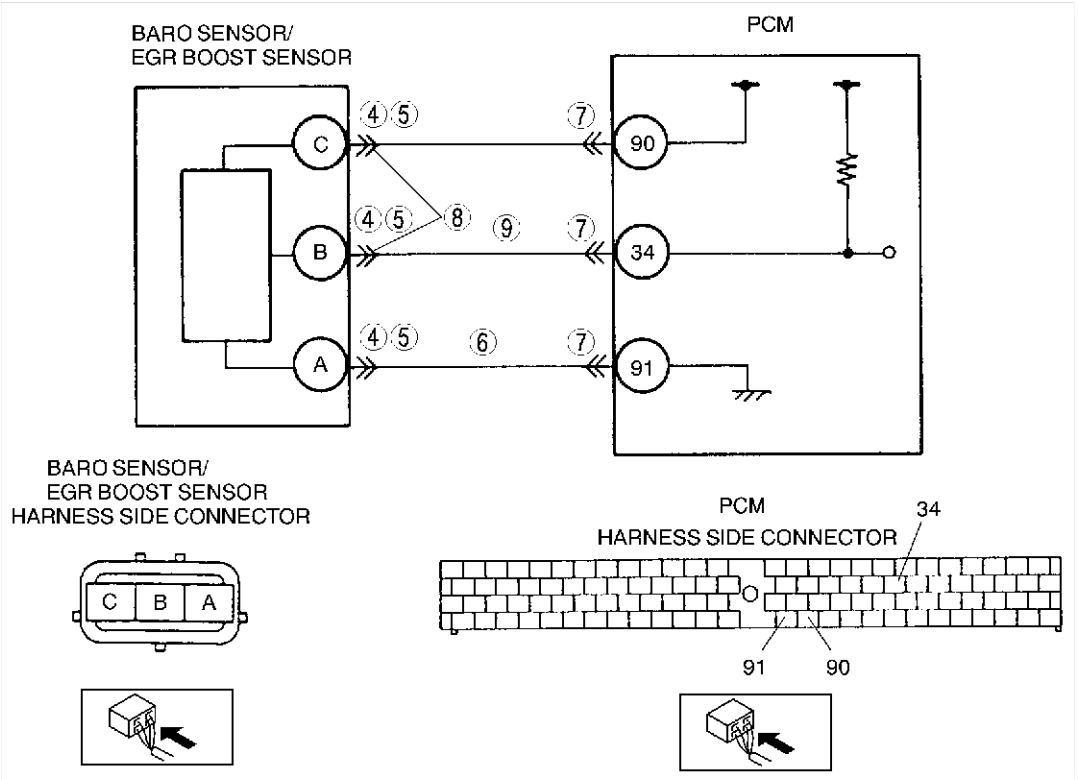

Diagnostic procedure

STEP	INSPECTION		ACTION
1	**VERIFY FREEZE FRAME DATA HAS BEEN RECORDED** • Has FREEZE FRAME DATA been recorded?	Yes	Go to next step.
		No	Record FREEZE FRAME DATA on repair order, then go to next step.
2	**VERIFY RELATED SERVICE INFORMATION AVAILABILITY** • Check for related Service Information availability. • Is any related Service Information available?	Yes	Perform repair or diagnosis according to available Service Information. • If vehicle is not repaired, go to next step.
		No	Go to next step.

STEP	INSPECTION		ACTION
3	**VERIFY CURRENT INPUT SIGNAL STATUS-IS CONCERN INTERMITTENT OR CONSTANT** • Connect WDS or equivalent to DLC-2. • Start engine. • Access BARO PID. • Is BARO PID **below 4.8 V**?	Yes	Go to next step.
		No	Intermittent concern exists. Go to INTERMITTENT CONCERNS TROUBLESHOOTING procedure. (See F4–247 INTERMITTENT CONCERN TROUBLESHOOTING.)
4	**INSPECT CONNECTION OF BARO SENSOR/ EGR BOOST SENSOR CONNECTOR** • Turn ignition key to OFF. • Verify that the BARO sensor/EGR boost sensor connector is connected securely. • Is connection okay?	Yes	Go to next step.
		No	Reconnect the connector, then go to Step 10.
5	**INSPECT BARO SENSOR/EGR BOOST SENSOR CONNECTOR FOR POOR CONNECTION** • Disconnect the BARO sensor/EGR boost sensor connector. • Check for poor connection (damaged, pulled-out pins, corrosion, etc.). • Is there any malfunction?	Yes	Repair or replace suspected terminal, then go to Step 10.
		No	Go to next step.
6	**VERIFY BARO SENSOR/EGR BOOST SENSOR GROUND CIRCUIT FOR OPEN CIRCUIT** • Check continuity between BARO sensor/EGR boost sensor terminal A (harness-side) and body ground. • Is there continuity?	Yes	Go to next step.
		No	Check for open circuit between PCM terminal 91 (harness-side) and BARO sensor/EGR boost sensor terminal A (harness-side). Repair or replace suspected harness, then go to Step 10.
7	**CHECK PCM CONNECTOR** • Disconnect PCM connector. • Check for poor connection at terminal 91 (damaged, pulled-out pins, corrosion, etc.). • Is there any malfunction?	Yes	Repair terminal, then go to Step 10.
		No	Go to next step.
8	**VERIFY BARO SENSOR/EGR BOOST SENSOR SIGNAL CIRCUIT FOR SHORT TO CONSTANT VOLTAGE CIRCUIT** • Check for continuity between BARO sensor/ EGR boost sensor terminal B and C (harness-side). • Is there any continuity?	Yes	Repair or replace suspected harness, then go to Step 10.
		No	Go to next step.
9	**VERIFY BARO SENSOR/EGR BOOST SENSOR SIGNAL CIRCUIT FOR OPEN** • Check continuity between BARO sensor/EGR boost sensor terminal B (harness-side) and PCM terminal 34 (harness-side). • Is there any continuity?	Yes	Go to next step.
		No	Repair or replace suspected harness, then go to next step.
10	**VERIFY TROUBLESHOOTING OF DTC P0108 COMPLETED** • Make sure to reconnect all disconnected connectors. • Turn ignition key to ON (Engine OFF). • Clear DTC from memory using WDS or equivalent. • Start engine. • Make sure that IAT PID is **above 10 °C {50 °F}** • Is same DTC present?	Yes	Replace PCM, then go to next step.
		No	Go to next step.
11	**VERIFY AFTER REPAIR PROCEDURE** • Perform “After Repair Procedure”. (See F4–110 AFTER REPAIR PROCEDURE.) • Is there any DTC present?	Yes	Go to applicable DTC inspection. (See F4–113 DTC TABLE.)
		No	Troubleshooting completed.

End Of Sie

DTC P0111

AME427001084W15

DTC P0111	IAT circuit performance problem
DETECTION CONDITION	• Intake air temperature is higher than engine coolant temperature by **40 °C {104 °F}** and ignition key is ON. **Diagnostic support note** • This is a continuous monitor (CCM). • MIL illuminates if PCM detects the above malfunction condition in two consecutive drive cycles. • PENDING CODE is available if PCM detects the above malfunction condition during first drive cycle. • FREEZE FRAME DATA is available. • DTC is stored in PCM memory.
POSSIBLE CAUSE	• IAT sensor malfunction • Poor connection at MAF/IAT sensor or PCM connector • PCM malfunction

Diagnostic procedure

STEP	INSPECTION		ACTION
1	**VERIFY FREEZE FRAME DATA HAS BEEN RECORDED** • Has FREEZE FRAME DATA been recorded?	Yes	Go to next step.
		No	Record FREEZE FRAME DATA on repair order, then go to next step.
2	**VERIFY RELATED SERVICE INFORMATION AVAILABILITY** • Check for related Service Information availability. • Is any related Service Information available?	Yes	Perform repair or diagnosis according to available Service Information. • If vehicle is not repaired, go to next step.
		No	Go to next step.
3	**INSPECT MAF/IAT SENSOR CONNECTOR FOR POOR CONNECTION** • Turn ignition key to OFF. • Disconnect MAF/IAT sensor connector. • Check for poor connection (damaged, pulled-out pins, corrosion, etc.). • Are there any malfunctions?	Yes	Repair or replace terminal, then go to Step 6.
		No	Go to next step.

STEP	INSPECTION		ACTION
4	**INSPECT IAT SENSOR** • Inspect IAT sensor. (See F4–98 IAT Sensor Resistance Inspection) • Is IAT sensor okay?	Yes	Replace MAF/IAT sensor, then go to Step 6.
		No	Go to next step.
5	**INSPECT PCM CONNECTOR FOR POOR CONNECTION** • Disconnect PCM connector. • Check for poor connection (damaged, pulled-out pins, corrosion, etc.). • Are there any malfunction?	Yes	Repair or replace terminal, then go to Step 6.
		No	Go to next step.
6	**VERIFY TROUBLESHOOTING OF DTC P0111 COMPLETED** • Make sure to reconnect all disconnected connectors. • Clear DTC from PCM memory using WDS or equivalent. • Start engine and run engine under FREEZE FRAME DATA condition. • Is PENDING CODE of same DTC present?	Yes	Replace PCM, then go to next step.
		No	Go to next step.
7	**VERIFY AFTER REPAIR PROCEDURE** • Perform “After Repair Procedure”. (See F4–110 AFTER REPAIR PROCEDURE.) • Is there any DTC present?	Yes	Go to applicable DTC inspection. (See F4–113 DTC TABLE.)
		No	Troubleshooting completed.

End Of Ste

DTC P0112

AME427001084W16

DTC P0112	IAT circuit low input
DETECTION CONDITION	• The PCM monitors IAT sensor signal at PCM terminal 39. If the PCM detected IAT sensor voltage **below 0.2 V**, the PCM determines that the IAT sensor circuit has malfunction. **Diagnostic support note** • This is a continuous monitor (CCM). • MIL illuminates if PCM detects the above malfunction condition during first drive cycle. • PENDING CODE is not available. • FREEZE FRAME DATA is available. • DTC is stored in the PCM memory.
POSSIBLE CAUSE	• IAT sensor malfunction • Short to ground circuit between MAF/IAT sensor terminal F and PCM terminal 39 • Short each harness IAT signal circuit and IAT ground circuit. • PCM malfunction

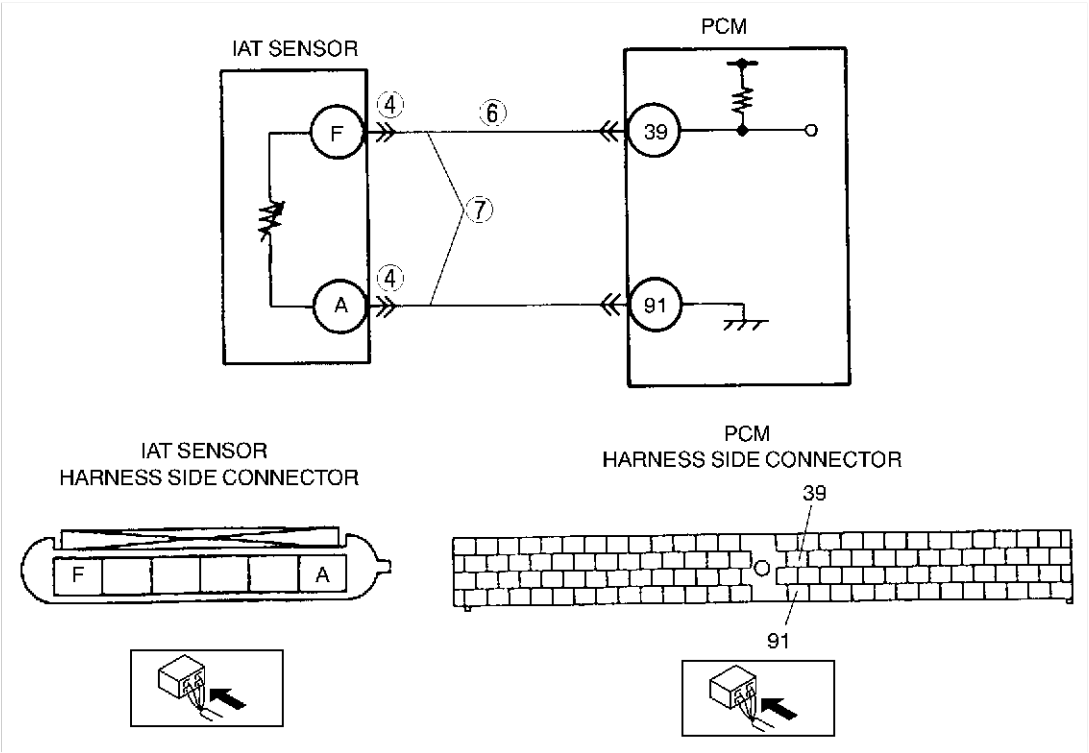

Diagnostic procedure

STEP	INSPECTION		ACTION
1	**VERIFY FREEZE FRAME DATA HAS BEEN RECORDED** • Has FREEZE FRAME DATA been recorded?	Yes	Go to next step.
		No	Record FREEZE FRAME DATA on repair order, then go to next step.

STEP	INSPECTION		ACTION
2	**VERIFY RELATED SERVICE INFORMATION AVAILABILITY** • Check for related Service Information availability. • Is any related Service Information available?	Yes	Perform repair or diagnosis according to available Service Information. • If vehicle is not repaired, go to next step.
		No	Go to next step.
3	**VERIFY CURRENT INPUT SIGNAL STATUS–IS CONCERN INTERMITTENT OR CONSTANT** • Connect WDS or equivalent to DLC-2. • Turn ignition key to ON (engine OFF). • Access IAT PID. • Is IAT PID **below 0.2 V**?	Yes	Go to next step.
		No	Intermittent concern exists. Go to INTERMITTENT CONCERNS TROUBLESHOOTING procedure. (See F4–247 INTERMITTENT CONCERN TROUBLESHOOTING.)
4	**INSPECT MAF SENSOR TERMINAL** • Turn ignition key to OFF. • Disconnect MAF/IAT sensor connector. • Check for bent terminal of MAF/IAT sensor terminal A and F (part-side). • Is there any malfunction?	Yes	Repair or replace terminal, then go to Step 8.
		No	Go to next step.
5	**CLASSIFY IAT SENSOR MALFUNCTION OR HARNESS MALFUNCTION** • Turn ignition key to ON (engine OFF). • Access IAT PID. • Is IAT PID **below 0.2 V**?	Yes	Go to next step.
		No	Replace MAF/IAT sensor, then go to Step 8.
6	**INSPECT IAT SIGNAL CIRCUIT FOR SHORT TO GROUND** • Turn ignition key to OFF. • Disconnect PCM connector. • Check continuity between MAF/IAT sensor terminal F (harness-side) and body ground. • Is there any continuity?	Yes	Repair or replace harness for short to ground, then go to Step 8.
		No	Go to next step.
7	**INSPECT IAT CIRCUITS FOR SHORT** • Check continuity between MAF/IAT sensor terminal A and F (harness-side). • Is there any continuity?	Yes	Repair or replace harness for short, then go to Step 8.
		No	Go to next step.
8	**VERIFY TROUBLESHOOTING OF DTC P0112 COMPLETED** • Make sure to reconnect all disconnected connectors. • Clear DTC from PCM memory using WDS or equivalent. • Start engine. • Is same DTC present?	Yes	Replace PCM, then go to next step.
		No	Go to next step.
9	**VERIFY AFTER REPAIR PROCEDURE** • Perform “After Repair Procedure”. (See F4–110 AFTER REPAIR PROCEDURE.) • Is there any DTC present?	Yes	Go to applicable DTC inspection. (See F4–113 DTC TABLE.)
		No	Troubleshooting completed.

End Of Ste

DTC P0113

AME427001084W17

DTC P0113	IAT circuit high input
DETECTION CONDITION	• The PCM monitors IAT sensor signal at PCM terminal 39. If the PCM detected IAT sensor voltage **above 4.8 V**, the PCM determines that the IAT sensor circuit has malfunction. **Diagnostic support note** • This is a continuous monitor. • MIL illuminates if PCM detects the above malfunction condition during first drive cycle. • PENDING CODE is not available. • FREEZE FRAME DATA is available. • DTC is stored in the PCM memory.
POSSIBLE CAUSE	• IAT sensor malfunction • Open circuit between MAF/IAT sensor terminal F and PCM terminal 39 • Short to power circuit between MAF/IAT sensor terminal F and PCM terminal 39 • Open circuit between MAF/IAT sensor terminal A and PCM terminal 91 • Poor connection at MAF/IAT sensor or PCM connector. • PCM malfunction

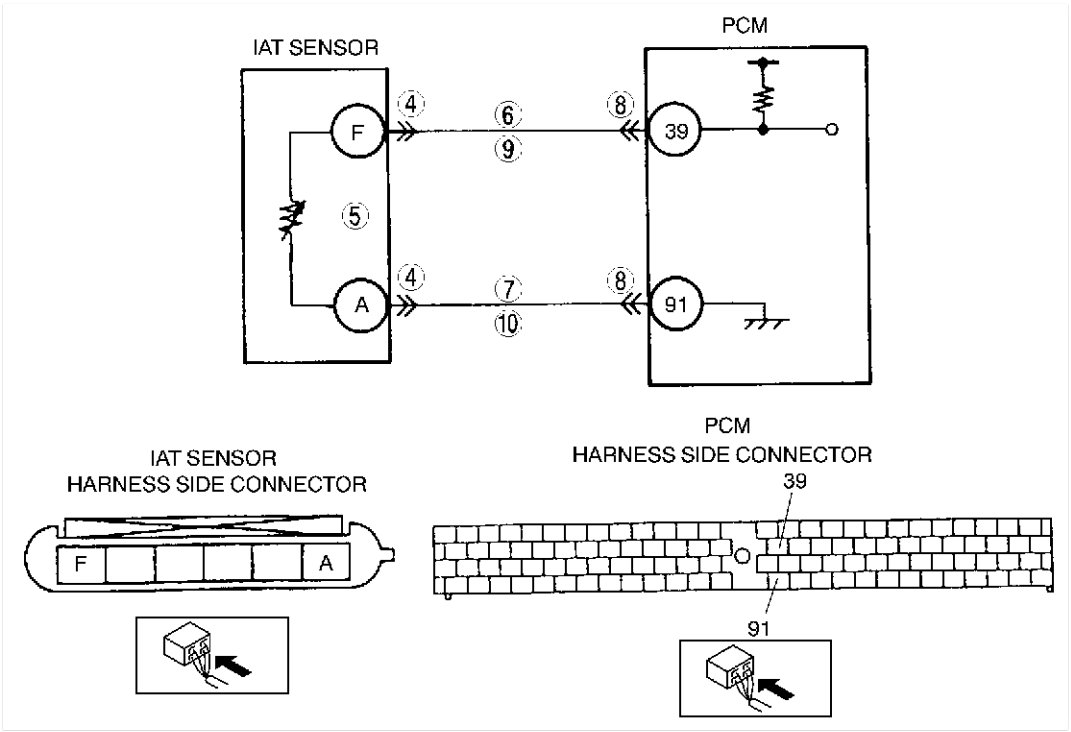

Diagnostic procedure

STEP	INSPECTION		ACTION
1	**VERIFY FREEZE FRAME DATA HAS BEEN RECORDED** • Has FREEZE FRAME DATA been recorded?	Yes	Go to next step.
		No	Record FREEZE FRAME DATA on repair order, then go to next step.
2	**VERIFY RELATED SERVICE INFORMATION AVAILABILITY** • Check for related Service Information availability. • Is any related Service Information available?	Yes	Perform repair or diagnosis according to available Service Information. • If vehicle is not repaired, go to next step.
		No	Go to next step.
3	**VERIFY CURRENT INPUT SIGNAL STATUS–IS CONCERN INTERMITTENT OR CONSTANT** • Connect WDS or equivalent to DLC-2. • Turn ignition key to ON (engine OFF). • Access IAT PID. • Is IAT PID **above 4.8 V**?	Yes	Go to next step.
		No	Intermittent concern exists. Go to INTERMITTENT CONCERNS TROUBLESHOOTING procedure. (See F4–247 INTERMITTENT CONCERN TROUBLESHOOTING.)

STEP	INSPECTION		ACTION
4	**INSPECT MAF SENSOR CONNECTOR FOR POOR CONNECTION** • Turn ignition key to OFF. • Disconnect MAF/IAT sensor connector. • Check for poor connection (damaged, pulled-out pins, corrosion, etc.). • Are there any malfunctions?	Yes	Repair or replace terminal, then go to Step 11.
		No	Go to next step.
5	**INSPECT IAT SENSOR** • Inspect IAT sensor. (See F4–98 IAT Sensor Resistance Inspection) • Is IAT sensor okay?	Yes	Replace MAF/IAT sensor, then go to Step 11.
		No	Go to next step.
6	**INSPECT IAT SENSOR SIGNAL CIRCUIT FOR SHORT TO POWER** • Turn ignition key to ON (Engine OFF). • Measure voltage between MAF/IAT sensor terminal F (harness-side) and body ground. • Is there voltage **B+**?	Yes	Repair or replace harness for short to power, then go to Step 11.
		No	Go to next step.
7	**INSPECT IAT SENSOR GROUND CIRCUIT FOR SHORT TO POWER** • Measure voltage between MAF/IAT sensor terminal A (harness-side) and body ground. • Is there voltage **B+**?	Yes	Repair or replace harness for short to power, then go to Step 11.
		No	Go to next step.
8	**INSPECT PCM CONNECTOR FOR POOR CONNECTION** • Turn ignition key to OFF. • Disconnect PCM connector. • Inspect PCM terminal 39 and 91 (harness-side) for tightness using feeler tool. • Are there any malfunction?	Yes	Repair or replace terminal, then go to Step 11.
		No	Go to next step.
9	**INSPECT IAT SENSOR SIGNAL CIRCUIT FOR OPEN CIRCUIT** • Disconnect PCM connector. • Check continuity between MAF/IAT sensor terminal F (harness-side) and PCM terminal 39. • Is there any continuity?	Yes	Go to next step.
		No	Repair or replace harness for open, then go to Step 11.
10	**INSPECT IAT SENSOR GROUND CIRCUIT FOR OPEN CIRCUIT** • Check continuity between MAF/IAT sensor terminal A (harness-side) and PCM terminal 91. • Is there any continuity?	Yes	Go to next step.
		No	Repair or replace harness for open, then go to next step.
11	**VERIFY TROUBLESHOOTING OF DTC P0113 COMPLETED** • Make sure to reconnect all disconnected connectors. • Clear DTC from PCM memory using WDS or equivalent. • Start engine. • Is same DTC present?	Yes	Replace PCM, then go to next step.
		No	Go to next step.
12	**VERIFY AFTER REPAIR PROCEDURE** • Perform “After Repair Procedure”. (See F4–110 AFTER REPAIR PROCEDURE.) • Is there any DTC present?	Yes	Go to applicable DTC inspection. (See F4–113 DTC TABLE.)
		No	Troubleshooting completed.

End Of Sta

DTC P0117

AME427001084W18

DTC P0117	ECT circuit low input
DETECTION CONDITION	• The PCM monitors ECT sensor signal at PCM terminal 38. If the PCM detected ECT sensor voltage **below 0.14 V** the PCM determines that the ECT sensor circuit has malfunction. **Diagnostic support note** • This is a continuous monitor (CCM). • MIL illuminates if PCM detects the above malfunction condition during first drive cycle. • PENDING CODE is not available. • FREEZE FRAME DATA is available. • DTC is stored in the PCM memory.
POSSIBLE CAUSE	• ECT sensor malfunction • Short to ground circuit between ECT sensor terminal A and PCM connector terminal 38. • Short each harness ECT signal circuit and ECT ground circuit. • PCM malfunction

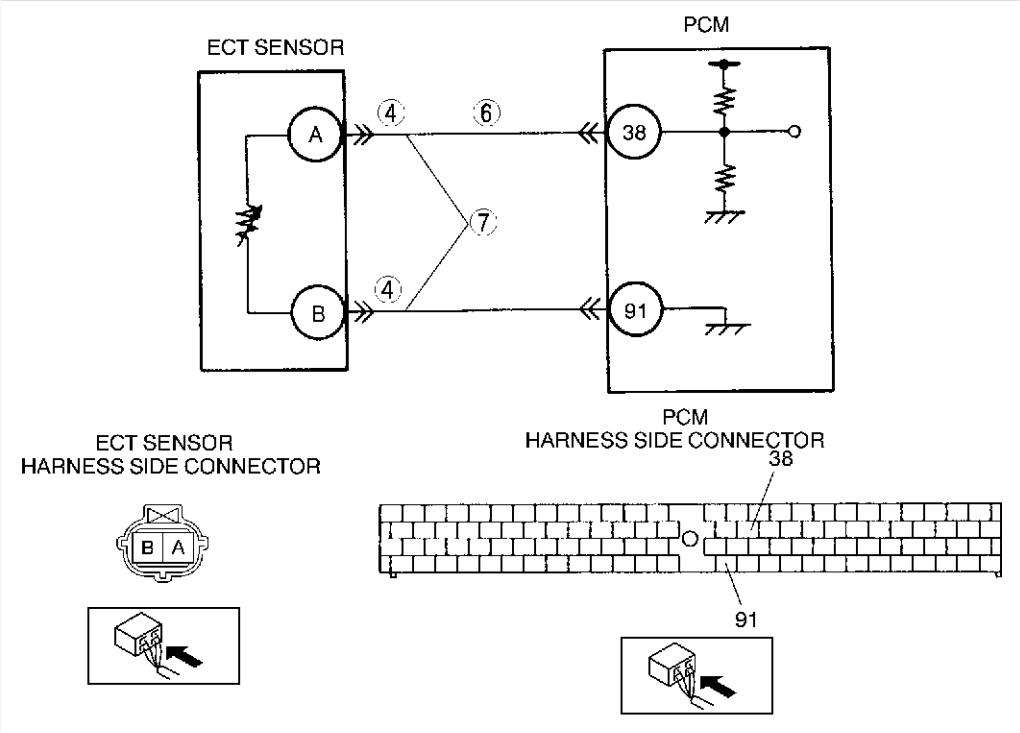

Diagnostic procedure

STEP	INSPECTION		ACTION
1	**VERIFY FREEZE FRAME DATA HAS BEEN RECORDED** • Has FREEZE FRAME DATA been recorded?	Yes	Go to next step.
		No	Record FREEZE FRAME DATA on repair order, then go to next step.
2	**VERIFY RELATED SERVICE INFORMATION AVAILABILITY** • Check for related Service Information availability. • Is any related Service Information available?	Yes	Perform repair or diagnosis according to available Service Information. • If vehicle is not repaired, go to next step.
		No	Go to next step.

STEP	INSPECTION		ACTION
3	**VERIFY CURRENT INPUT SIGNAL STATUS–IS CONCERN INTERMITTENT OR CONSTANT** • Connect WDS or equivalent to DLC-2. • Turn ignition key to ON (engine OFF). • Access ECT PID. • Is ECT PID **below 0.14 V**?	Yes	Go to next step.
		No	Intermittent concern exists. Go to INTERMITTENT CONCERNS TROUBLESHOOTING procedure. (See F4–247 INTERMITTENT CONCERN TROUBLESHOOTING.)
4	**INSPECT TERMINAL BENT** • Turn ignition key to OFF. • Disconnect ECT sensor connector. • Check for bent of ECT sensor terminals A and B (part-side). • Is there any malfunction?	Yes	Repair or replace terminal, then go to Step 8.
		No	Go to next step.
5	**CLASSIFY ECT SENSOR MALFUNCTION OR HARNESS MALFUNCTION** • Disconnect ECT sensor connector. • Turn ignition key to ON (Engine OFF). • Access ECT PID. • Is ECT PID **below 0.14 V**?	Yes	Go to next step.
		No	Replace ECT sensor, then go to Step 8.
6	**INSPECT ECT SIGNAL CIRCUIT FOR SHORT TO GROUND** • Turn ignition key to OFF. • Disconnect PCM connector. • Check continuity between ECT sensor terminal A (harness-side) and body ground. • Is there any continuity?	Yes	Repair or replace harness for short to ground, then go to Step 8.
		No	Go to next step.
7	**INSPECT IAT CIRCUIT FOR SHORT HARNESSES** • Check continuity between ECT sensor terminal A and B (harness-side). • Is there any continuity?	Yes	Repair or replace harness for short, then go to next step.
		No	Go to next step.
8	**VERIFY TROUBLESHOOTING OF DTC P0117 COMPLETED** • Make sure to reconnect all disconnected connectors. • Clear DTC from PCM memory using WDS or equivalent. • Start turn ignition key to ON (Engine OFF). • Is same DTC present?	Yes	Replace PCM, then go to next step.
		No	Go to next step.
9	**VERIFY AFTER REPAIR PROCEDURE** • Perform “After Repair Procedure”. (See F4–110 AFTER REPAIR PROCEDURE.) • Is there any DTC present?	Yes	Go to applicable DTC inspection. (See F4–113 DTC TABLE.)
		No	Troubleshooting completed.

End Of Sie

DTC P0118

AME427001084W19

DTC P0118	ECT circuit high input
DETECTION CONDITION	• The PCM monitors ECT sensor signal at PCM terminal 38. If the PCM detected ECT sensor voltage **above 4.57 V**, the PCM determines that the ECT sensor circuit has malfunction. **Diagnostic support note** • This is a continuous monitor (CCM). • MIL illuminates if PCM detects the above malfunction condition during first drive cycle. • PENDING CODE is not available. • FREEZE FRAME DATA is available. • DTC is stored in the PCM memory.
POSSIBLE CAUSE	• ECT sensor malfunction • Open circuit between ECT sensor terminal A and PCM terminal 38 • Short to power circuit between ECT sensor terminal A and PCM terminal 38 • Open circuit between ECT sensor terminal B and PCM terminal 91 • Poor connection of ECT sensor or PCM connectors • PCM malfunction

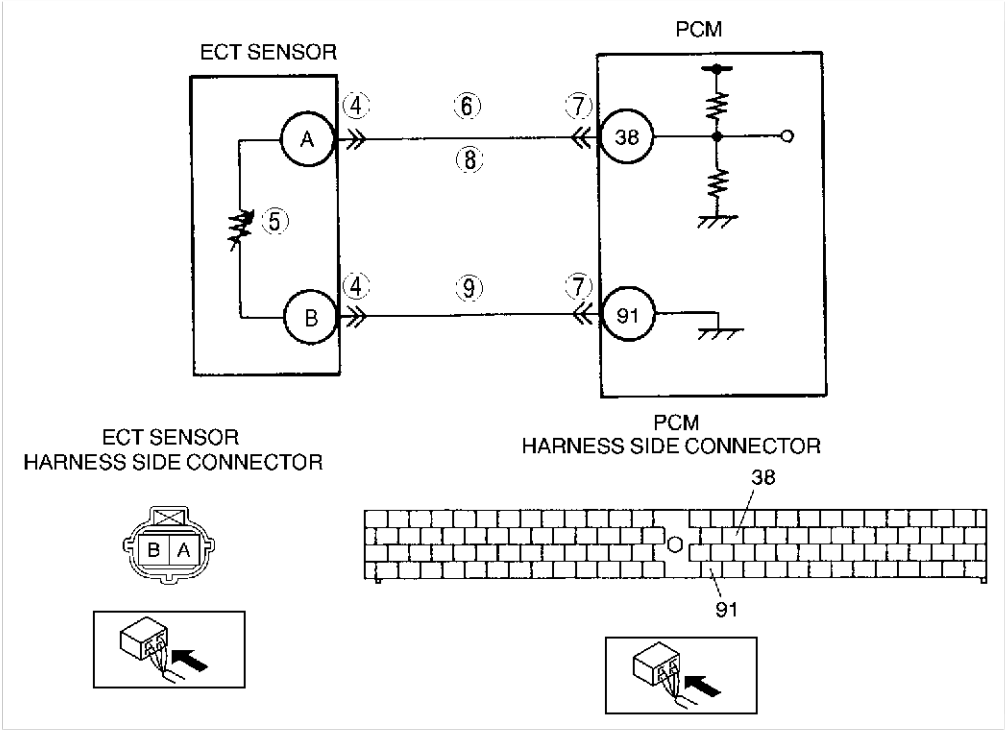

Diagnostic procedure

STEP	INSPECTION		ACTION
1	**VERIFY FREEZE FRAME DATA HAS BEEN RECORDED** • Has FREEZE FRAME DATA been recorded?	Yes	Go to next step.
		No	Record FREEZE FRAME DATA on repair order, then go to next step.
2	**VERIFY RELATED SERVICE INFORMATION AVAILABILITY** • Check for related Service Information availability. • Is any related Service Information available?	Yes	Perform repair or diagnosis according to available Service Information. • If vehicle is not repaired, go to next step.
		No	Go to next step.
3	**VERIFY CURRENT INPUT SIGNAL STATUS–IS CONCERN INTERMITTENT OR CONSTANT** • Connect WDS or equivalent to DLC-2. • Turn ignition key to ON (engine OFF). • Access ECT PID. • Is ECT PID **above 4.57 V**?	Yes	Go to next step.
		No	Intermittent concern exists. Go to INTERMITTENT CONCERNS TROUBLESHOOTING procedure. (See F4–247 INTERMITTENT CONCERN TROUBLESHOOTING.)

STEP	INSPECTION		ACTION
4	**INSPECT ECT SENSOR CONNECTOR FOR POOR CONNECTION** • Turn ignition key to OFF. • Disconnect ECT sensor connector. • Check for poor connection (damaged, pulled-out pins, corrosion, etc.). • Are there any malfunctions?	Yes	Repair or replace terminal, then go to Step 10.
		No	Go to next step.
5	**CLASSIFY ECT SENSOR OR HARNESS MALFUNCTION** • Connect jumper wire between ECT sensor terminals A and B (harness-side) • Access ECT PID. • Is ECT PID **approx. 0 V**?	Yes	Replace ECT sensor, then go to Step 10.
		No	Go to next step.
6	**INSPECT ECT SENSOR SIGNAL CIRCUIT FOR SHORT TO POWER** • Turn ignition key to ON (Engine OFF). • Measure voltage between ECT sensor terminal A (harness-side) and body ground. • Is there voltage **B+**?	Yes	Repair or replace harness for short to power, then go to Step 10.
		No	Go to next step.
7	**INSPECT PCM CONNECTOR FOR POOR CONNECTION** • Disconnect PCM connector. • Check for poor connection (damaged, pulled-out pins, corrosion, etc.). • Are there any malfunction?	Yes	Repair or replace terminal, then go to Step 10.
		No	Go to next step.
8	**INSPECT ECT SENSOR SIGNAL CIRCUIT FOR OPEN CIRCUIT** • Disconnect PCM connector. • Check continuity between ECT sensor terminal A (harness-side) and PCM terminal 38. • Is there any continuity?	Yes	Go to next step.
		No	Repair or replace harness for open, then go to Step 10.
9	**INSPECT ECT SENSOR GROUND CIRCUIT FOR OPEN CIRCUIT** • Check continuity between ECT sensor terminal B (harness-side) and PCM terminal 91. • Is there any continuity?	Yes	Go to next step.
		No	Repair or replace harness for open, then go to next step.
10	**VERIFY TROUBLESHOOTING OF DTC P0118 COMPLETED** • Make sure to reconnect all disconnected connectors. • Clear DTC from PCM memory using WDS or equivalent. • Turn ignition key to ON (Engine OFF). • Is same DTC present?	Yes	Replace PCM, then go to next step.
		No	Go to next step.
11	**VERIFY AFTER REPAIR PROCEDURE** • Perform “After Repair Procedure”. (See F4–110 AFTER REPAIR PROCEDURE.) • Is there any DTC present?	Yes	Go to applicable DTC inspection. (See F4–113 DTC TABLE.)
		No	Troubleshooting completed.

End Of Sta

DTC P0121

AME427001084W20

DTC P0121	Throttle position stuck close (lower than expected)/open (higher than expected)
DETECTION CONDITION	• If PCM detects that throttle valve opening angle is **below 12.5%** for **5 s** after following conditions are met, PCM determines that TP is stuck close: **MONITORING CONDITION** — Engine coolant temperature **above 70 °C {158 °F}** — MAF sensor signal above **88.3 g/s {11.7 lb/min.}** • If PCM detects that throttle valve opening angle is **above 50%** for **5 s** after following conditions are met, PCM determines that TP is stuck open: **MONITORING CONDITION** — Engine speed **above 500 rpm** — MAF sensor signal **below 8.93 g/s {1.18 lb/min.}** **Diagnostic support note** • This is a continuous monitor (CCM). • MIL illuminates if PCM detects the above malfunction conditions in two consecutive drive cycles. • PENDING CODE is available if PCM detects the above malfunction condition during first drive cycle. • FREEZE FRAME DATA is available. • DTC is stored in the PCM memory.
POSSIBLE CAUSE	• TP sensor malfunction • Electrical corrosion in TP signal circuit • Voltage drops in constant voltage (Vref) supply circuit • Voltage drops in ground circuit • MAF sensor malfunction • PCM malfunction

Diagnostic procedure

STEP	INSPECTION		ACTION
1	**VERIFY FREEZE FRAME DATA HAS BEEN RECORDED** • Has FREEZE FRAME DATA been recorded?	Yes	Go to next step.
		No	Record FREEZE FRAME DATA on repair order, then go to next step.
2	**VERIFY RELATED PENDING CODE OR STORED DTC** • Turn ignition key to ON (Engine OFF). • Retrieve pending or stored DTC using WDS or equivalent. • Is DTC P0101 also retrieved?	Yes	Go to DTC P0101 troubleshooting procedure.
		No	Go to next step.
3	**VERIFY RELATED SERVICE INFORMATION AVAILABILITY** • Check for related Service Information availability. • Is any related Service Information available?	Yes	Perform repair or diagnosis according to available Service Information. • If vehicle is not repaired, go to next step.
		No	Go to next step.
4	**VERIFY CURRENT INPUT SIGNAL STATUS - IS CONCERN INTERMITTENT OR CONSTANT** • Start the engine. • Access ECT, TP and MAF PIDs using WDS or equivalent. • Warm up the engine until ECT PID is **above 70 °C {158 °F}** • Drive the vehicle. • Read TP PID while MAF PID is **above 88.3 g/s {11.7 lb/min.}**. • Is TP PID reading **above 12.5%**?	Yes	Go to Step 7.
		No	Go to next step.
5	**VERIFY TP PID** • Start engine. • Access TP, MAF and RPM PIDs using WDS or equivalent. • Read TP PID while MAF PID is **below 8.93 g/s {0.7 lb/min.}** and RPM PID is **above 500 rpm**. • Is TP PID reading **above 50%**?	Yes	Go to Step 12.
		No	Go to next step.
6	**VERIFY CURRENT INPUT SIGNAL STATUS - IS CONCERN INTERMITTENT OR CONSTANT** • Drive the vehicle and read MAF PID. • Does MAF PID change in compliance with driving condition?	Yes	Intermittent concern exists. Go to INTERMITTENT CONCERNS troubleshooting procedure.
		No	Check Mass airflow sensor and related circuits and terminals. (See F4–96 MASS AIR FLOW (MAF)/INTAKE AIR TEMPERATURE (IAT) SENSOR INSPECTION.) Repair or replace as necessary, then go to Step 16.

STEP	INSPECTION		ACTION
7	**CHECK TP SENSOR TERMINALS FOR ELECTRICAL CORROSION** • Turn ignition key to OFF. • Disconnect TP sensor connector • Check for electrical corrosion on male and female TP sensor terminals. • Is any electrical corrosion found?	Yes	Repair or replace suspected terminal or TP sensor, then go to Step 11.
		No	Go to next step.
8	**VERIFY TP SENSOR** • Does TP sensor resistance smoothly change while gradually opening throttle valve?	Yes	Go to next step.
		No	Replace TP sensor, then go to Step 11.
9	**CHECK PCM TERMINALS FOR ELECTRICAL CORROSION** • Disconnect PCM connector. • Check for electrical corrosion on PCM male and female terminals. • Is any electrical corrosion found?	Yes	Repair terminal, then go to Step 11.
		No	Go to next step.
10	**CHECK CONSTANT VOLTAGE SUPPLY AND TP SIGNAL CIRCUITS FOR VOLTAGE DROP** • Connect PCM connector. • Turn ignition key to ON (Engine OFF). • Check voltage between following terminals: — TP sensor connector terminal C (harness-side) and PCM terminal 90 — TP sensor connector terminal B (harness-side) and PCM terminal 89 • Is voltage **approx. 0 V**?	Yes	Go to next step.
		No	Check for rust or corrosion on PCM terminals 89 and 90 (harness-side). • Repair or replace suspected terminal. Go to next step.
11	**VERIFY TROUBLESHOOTING OF DTC P0121 COMPLETED** • Make sure to reconnect all disconnected connectors. • Start the engine. • Clear DTC from PCM memory using WDS or equivalent. • Access ECT, TP and MAF PIDs using WDS or equivalent. • Warm up the engine until ECT PID is reading **above 70 °C {158°F}**. • Drive the vehicle and read TP and MAF PIDs. • Verify PIDs reading are within specifications MAF PID: **above 88.3 g/s {11.7 lb/min.}** TP PID: **above 12.5% above 5 s** • Is pending code of same DTC present?	Yes	Replace PCM, then go to Step 17.
		No	Go to Step 17.
12	**CHECK TP SENSOR TERMINALS FOR ELECTRICAL CORROSION** • Turn ignition key to OFF. • Disconnect TP sensor connector. • Check for electrical corrosion on male and female TP sensor terminals. • Is any electrical corrosion found?	Yes	Repair or replace suspected terminal or TP sensor, then go to Step 16.
		No	Go to next step.
13	**CHECK GROUND CIRCUIT FOR VOLTAGE DROP** • Check resistance between TP sensor terminal 3 (harness-side) and body ground. • Is resistance **approx. 0 ohm**?	Yes	Go to next step.
		No	Repair or replace for rust or corrosion on PCM terminal 91 (harness-side) • Repair or replace suspected terminal. Go to Step 16.
14	**VERIFY TP SENSOR** • Does resistance smoothly change while gradually opening throttle valve?	Yes	Go to next step.
		No	Replace TP sensor, then go to Step 16.
15	**CHECK PCM TERMINALS FOR ELECTRICAL CORROSION** • Disconnect PCM connector. • Check for electrical corrosion on PCM and PCM connector male and female terminals. • Is any electrical corrosion found?	Yes	Repair terminal, then go to next step.
		No	Go to next step.

STEP	INSPECTION		ACTION
16	**VERIFY TROUBLESHOOTING OF DTC P0121 COMPLETED** • Make sure to reconnect all disconnected connectors. • Start engine. • Clear DTC from PCM memory using WDS or equivalent. • Access RPM, TP and MAF PIDs using WDS or equivalent. • Verify TP PID is reading **below 50%** while MAF PID is **below 8.25 g/s {1.09 lb/min.}** and RPM PID is **above 500 rpm**. • Is pending code of same DTC present?	Yes	Replace PCM, then go to next step.
		No	Go to next step.
17	**VERIFY AFTER REPAIR PROCEDURE** • Perform “After Repair Procedure”. (See F4–110 AFTER REPAIR PROCEDURE.) • Is there any DTC present?	Yes	Go to applicable DTC inspection. (See F4–113 DTC TABLE.)
		No	Troubleshooting completed.

End Of Se

DTC P0122

AME427001084W21

DTC P0122	TP circuit low input
DETECTION CONDITION	• If PCM detects TP sensor voltage at PCM terminal 89 **below 0.16 V** after ignition key to ON, PCM determines that TP circuit has a malfunction. **Diagnostic support note** • This is a continuous monitor (CCM). • MIL illuminates if PCM detects the above malfunction conditions in first drive cycles. • PENDING CODE is not available. • FREEZE FRAME DATA is available. • DTC is stored in the PCM memory.
POSSIBLE CAUSE	• TP sensor malfunction • Connector or terminal malfunction • Open circuit between TP sensor terminal B and PCM terminal 89 • Short to ground circuit between TP sensor terminal B and PCM terminal 89 • Open circuit between TP sensor terminal C and PCM terminal 90 • Short to ground circuit between TP sensor terminal C and PCM terminal 90

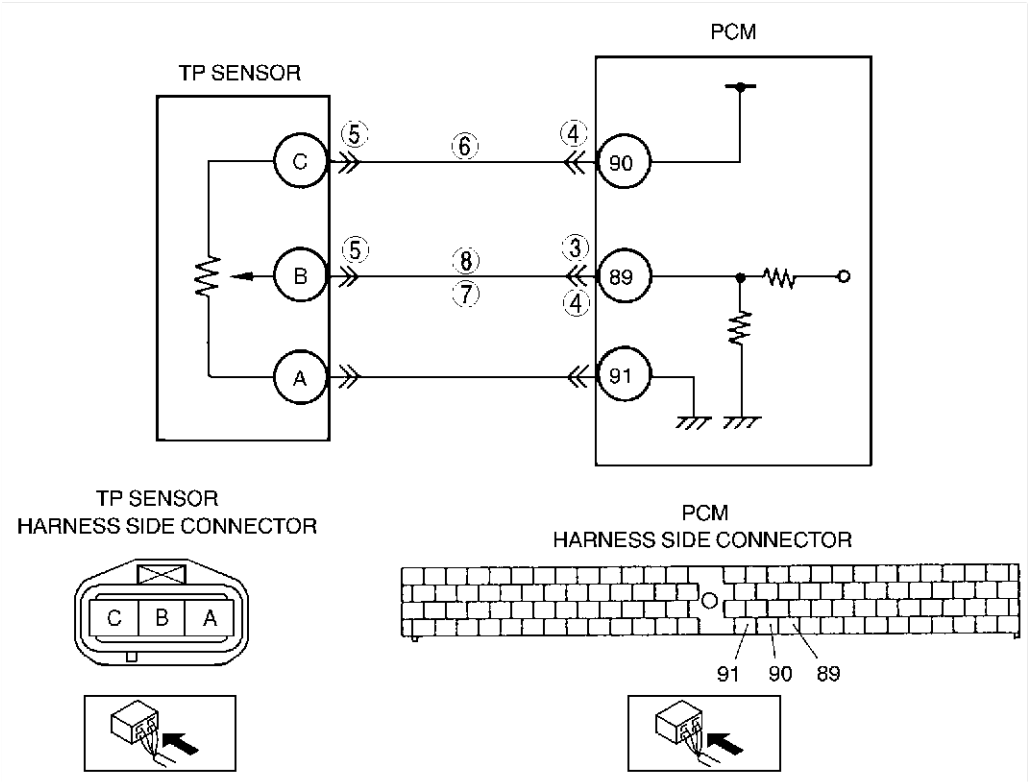

Diagnostic procedure

STEP	INSPECTION		ACTION
1	**VERIFY FREEZE FRAME DATA HAS BEEN RECORDED** • Has FREEZE FRAME DATA been recorded?	Yes	Go to next step.
		No	Record FREEZE FRAME DATA on repair order, then go to next step.
2	**VERIFY RELATED SERVICE INFORMATION AVAILABILITY** • Check for related Service Information availability. • Is any related Service Information available?	Yes	Perform repair or diagnosis according to available Service Information. • If vehicle is not repaired, go to next step.
		No	Go to next step.
3	**VERIFY CURRENT INPUT SIGNAL STATUS - IS CONCERN INTERMITTENT OR CONSTANT** • Connect WDS or equivalent to DLC-2. • Start engine. • Access TP PID while gradually depressing accelerator pedal. • Is TP PID **below 0.16 V**?	Yes	Go to next step.
		No	Intermittent concern exists. Go to INTERMITTENT CONCERNS TROUBLESHOOTING procedure. (See F4–247 INTERMITTENT CONCERN TROUBLESHOOTING.)
4	**CLASSIFY TP SENSOR OR HARNESS MALFUNCTION** • Disconnect TP sensor connector. • Connect a jumper wire between TP sensor terminals B and C (harness-side). • Access TP PID. • Is TP PID **above 4.9 V**?	Yes	Go to next step.
		No	Go to step 6.
5	**CHECK TP SENSOR CIRCUIT FOR OPEN CIRCUIT** • Turn ignition key to OFF. • Check continuity between TP sensor terminals B and C (part-side). • Is there continuity?	Yes	Check for poor TP sensor connector terminal C connection. Repair or replace as necessary, then go to Step 9.
		No	Replace TP sensor, then go to Step 9.
6	**CHECK POWER SUPPLY CIRCUIT VOLTAGE AT TP SENSOR CONNECTOR** **Note** • If DTC P0107 is also retrieved with P0122, then go to CONSTANT VOLTAGE troubleshooting procedure. • Turn ignition key to ON (Engine OFF). • Check voltage at TP sensor terminal C (harness-side). • Is there voltage **within 4.5—5.5 V**?	Yes	Go to next step.
		No	Repair or replace open circuit between TP sensor connector terminal C and PCM connector terminal 90 (harness-side). Then, then go to Step 9.
7	**VERIFY TP SIGNAL CIRCUIT FOR OPEN CIRCUIT** • Turn ignition key to OFF. • Disconnect PCM connector. • Check continuity between TP sensor terminal B (harness-side) and PCM terminal 89. • Is there continuity?	Yes	Go to next step.
		No	Repair or replace suspected harness, then go to Step 9.
8	**VERIFY TP SIGNAL CIRCUIT FOR SHORT TO GROUND** • Check continuity between TP sensor terminal B (harness-side) and body ground. • Is there continuity?	Yes	Repair or replace suspected harness, then go to Step 9.
		No	Go to next step.
9	**VERIFY TROUBLESHOOTING OF DTC P0122 COMPLETED** • Make sure to reconnect all disconnected connectors. • Clear DTC from PCM memory using WDS or equivalent. • Turn ignition key to ON (Engine OFF). • Is same DTC present?	Yes	Replace PCM, then go to next step.
		No	Go to next step.
10	**VERIFY AFTER REPAIR PROCEDURE** • Perform “After Repair Procedure”. (See F4–110 AFTER REPAIR PROCEDURE.) • Is there any DTC present?	Yes	Go to applicable DTC inspection. (See F4–113 DTC TABLE.)
		No	Troubleshooting completed.

DTC P0123

AME427001084W22

DTC P0123	TP circuit high input
DETECTION CONDITION	• If PCM detects TP sensor voltage at PCM terminal 89 is **above 4.96 V** after ignition key to ON, PCM determines that TP circuit has a malfunction. **Diagnostic support note** • This is a continuous monitor (CCM). • MIL illuminates if PCM detects the above malfunction conditions in first drive cycles. • PENDING CODE is not available. • FREEZE FRAME DATA is available. • DTC is stored in the PCM memory.
POSSIBLE CAUSE	• TP sensor malfunction • Connector or terminal malfunction • Open circuit between TP sensor terminal A and PCM terminal 91 • Short to constant voltage supply circuit between TP sensor terminal B and PCM terminal 89

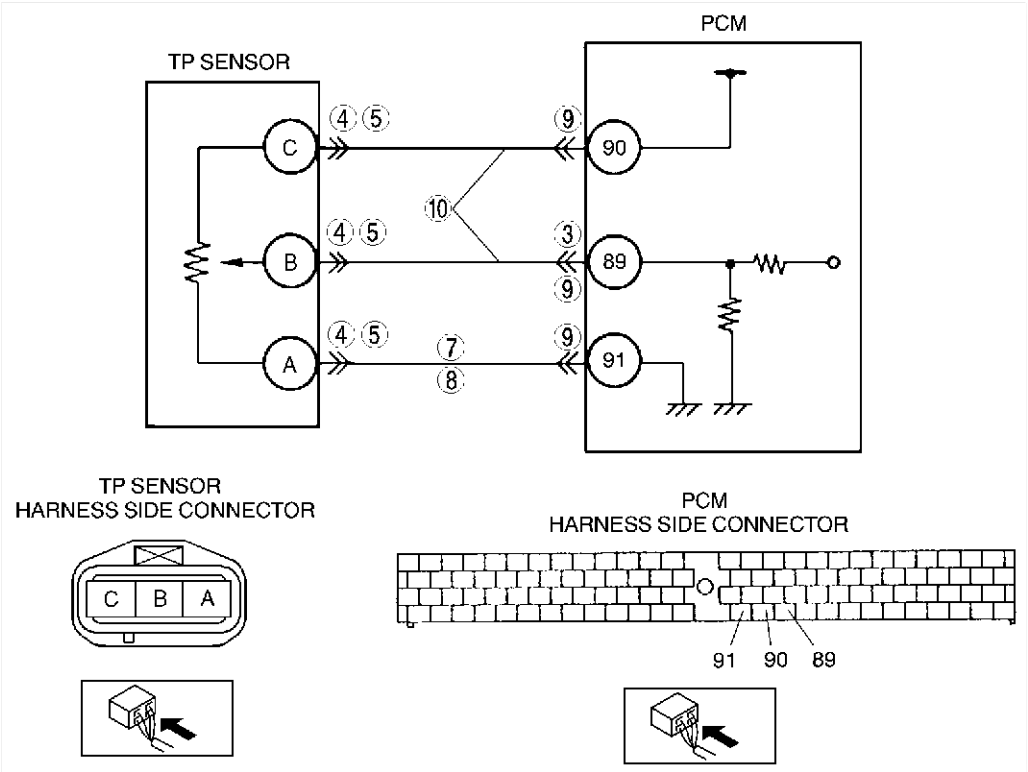

Diagnostic procedure

STEP	INSPECTION		ACTION
1	**VERIFY FREEZE FRAME DATA HAS BEEN RECORDED** • Has FREEZE FRAME DATA been recorded?	Yes	Go to next step.
		No	Record FREEZE FRAME DATA on repair order, then go to next step.
2	**VERIFY RELATED SERVICE INFORMATION AVAILABILITY** • Check for related Service Information availability. • Is any related Service Information available?	Yes	Perform repair or diagnosis according to available Service Information. • If vehicle is not repaired, go to next step.
		No	Go to next step.
3	**VERIFY CURRENT INPUT SIGNAL STATUS - IS CONCERN INTERMITTENT OR CONSTANT** • Connect WDS or equivalent to DLC-2. • Start engine. • Access TP PID while gradually depressing accelerator pedal. • Is TP PID **above 4.96 V**?	Yes	Go to next step.
		No	Intermittent concern exists. Go to INTERMITTENT CONCERNS TROUBLESHOOTING procedure. (See F4–247 INTERMITTENT CONCERN TROUBLESHOOTING.)

STEP	INSPECTION		ACTION
4	**CHECK TP SENSOR CONNECTOR** • Turn ignition key to OFF. • Verify that the TP sensor connector is connected securely. • Is connector okay?	Yes	Go to next step.
		No	Connect the connector securely, then go to Step 11.
5	**INSPECT TP SENSOR CONNECTOR FOR POOR CONNECTION** • Disconnect TP sensor connector. • Check for poor connection (damaged, pulled-out terminals, corrosion, etc.). • Is there any malfunction?	Yes	Repair or replace suspected terminal, then go to Step 11.
		No	Go to next step.
6	**INSPECT TP SENSOR** • Perform TP sensor inspection. (See F4–99 THROTTLE POSITION (TP) SENSOR INSPECTION) • Is TP sensor okay?	Yes	Go to next step.
		No	Replace TP sensor, then go to Step 11.
7	**VERIFY TP SENSOR GROUND CIRCUIT FOR OPEN AT TP SENSOR CONNECTOR** • Check continuity between TP sensor terminal A (harness-side) and body ground. • Is there continuity?	Yes	Go to step 10.
		No	Go to next step.
8	**VERIFY TP SENSOR GROUND CIRCUIT FOR OPEN CIRCUIT** • Check continuity between TP sensor connector terminal A and body ground. • Is there continuity?	Yes	Repair or replace open circuit between TP sensor connector terminal A (harness-side) and PCM connector terminal 91 (harness-side). Then, go to Step 11.
		No	Go to next step.
9	**CHECK PCM CONNECTOR** • Disconnect PCM connector. • Check for poor connection (damaged, pulled-out terminals, corrosion, etc.). • Is there any malfunction?	Yes	Repair terminal, then go to Step 11.
		No	Go to Step 11.
10	**VERIFY TP SIGNAL CIRCUIT FOR SHORT TO CONSTANT VOLTAGE CIRCUIT** • Check continuity between TP sensor connector terminals B and C. • Is there continuity?	Yes	Repair or replace suspected harness, then go to next step.
		No	Go to next step.
11	**VERIFY TROUBLESHOOTING OF DTC P0123 COMPLETED** • Make sure to reconnect all disconnected connectors. • Clear DTC from PCM memory using WDS or equivalent. • Turn ignition key to ON (Engine OFF). • Does the same DTC appear?	Yes	Replace PCM, then go to next step.
		No	Go to next step.
12	**VERIFY AFTER REPAIR PROCEDURE** • Perform “After Repair Procedure”. (See F4–110 AFTER REPAIR PROCEDURE.) • Is there any DTC present?	Yes	Go to applicable DTC inspection. (See F4–113 DTC TABLE.)
		No	Troubleshooting completed.

End Of Ste

DTC P0125

AME427001084W23

DTC P0125	Excessive time to enter closed loop fuel control
DETECTION CONDITION	• The PCM monitor ECT sensor signal at PCM terminal 38 after engine is started at the engine is cold. If ECT voltage does not reach the expected temperature for specified period, PCM determines that it has taken an excessive amount of time for the engine coolant temperature to reach the temperature necessary to start closed-loop fuel control. **Diagnostic support note** • This is a continuous monitor (CCM). • MIL illuminates if PCM detects the above malfunction condition in two consecutive drive cycles. • PENDING CODE is available if PCM detects the above malfunction condition during first drive cycle. • FREEZE FRAME DATA is available. • DTC is stored in PCM memory.
POSSIBLE CAUSE	• ECT sensor malfunction • Poor connection of connectors • PCM malfunction

Diagnostic procedure

STEP	INSPECTION		ACTION
1	**VERIFY FREEZE FRAME DATA HAS BEEN RECORDED** • Has FREEZE FRAME DATA been recorded?	Yes	Go to next step.
		No	Record FREEZE FRAME DATA on repair order, then go to next step.
2	**VERIFY RELATED SERVICE INFORMATION AVAILABILITY** • Check for related Service Information availability. • Is any related Service Information available?	Yes	Perform repair or diagnosis according to available Service Information. • If vehicle is not repaired, go to next step.
		No	Go to next step.
3	**VERIFY CURRENT INPUT SIGNAL STATUS-IS CONCERN INTERMITTENT OR CONSTANT** • Start engine. • Warm up engine completely. • Access ECT PID using WDS or equivalent. • Is ECT PID **above 60 °C {140 °F}**?	Yes	Intermittent concern exists. Go to INTERMITTENT CONCERNS TROUBLESHOOTING procedure. (See F4–247 INTERMITTENT CONCERN TROUBLESHOOTING.)
		No	Go to next step.
4	**INSPECT ECT SENSOR CONNECTOR FOR POOR CONNECTION** • Turn ignition key to OFF. • Disconnect ECT sensor connector. • Check for poor connection (damaged, pulled-out pins, corrosion, etc.). • Are there any malfunctions?	Yes	Repair or replace terminal, then go to Step 7.
		No	Go to next step.
5	**INSPECT ECT SENSOR** • Inspect ECT sensor. (See F4–100 ENGINE COOLANT TEMPERATURE (ECT) SENSOR INSPECTION.) • Is it okay?	Yes	Go to next step.
		No	Replace ECT sensor, then go to Step 7.
6	**INSPECT PCM CONNECTOR FOR POOR CONNECTION** • Disconnect PCM connector. • Check for poor connection (damaged, pulled-out pins, corrosion, etc.). • Are there any malfunctions?	Yes	Repair or replace terminal, then go to next step.
		No	Go to next step.
7	**VERIFY TROUBLESHOOTING OF DTC P0125 COMPLETED** • Make sure to reconnect all disconnected connectors. • Clear DTC from PCM memory using WDS or equivalent. • Turn ignition key to ON (Engine OFF). • Access ECT PID using WDS or equivalent. • Wait until ECT PID **below 20 °C {68 °F}**. • Start engine and warm it up completely. • Is PENDING CODE of same DTC stored?	Yes	Replace PCM, then go to next step.
		No	Go to next step.
8	**VERIFY AFTER REPAIR PROCEDURE** • Perform “After Repair Procedure”. (See F4–110 AFTER REPAIR PROCEDURE.) • Is there any DTC present?	Yes	Go to applicable DTC inspection. (See F4–113 DTC TABLE.)
		No	Troubleshooting completed.

DTC P0131, P0132, P0151, P0152

AME427001084W24

DTC P0131 **DTC P0132** **DTC P0151** **DTC P0152**	**HO2S (Front, RH) low stuck** **HO2S (Front, RH) high stuck** **HO2S (Front, LH) low stuck** **HO2S (Front, LH) high stuck**
DETECTION CONDITION	• PCM monitors input voltage from front HO2S when the following monitoring conditions are met. If input voltage from sensor remains **below or above 0.45 V** for **33.6 s**, PCM determines that there is no HO2S (Front, RH/LH) inversion. **MONITORING CONDITIONS** — Engine speed is **above 1,500 rpm**. — Engine coolant temperature is **above 70 °C {158 °F}**. **Diagnostic support note** • This is a continuous monitor (CCM). • MIL illuminates if PCM detects the above malfunction condition in two consecutive drive cycles. • PENDING CODE is available if PCM detects the above malfunction condition during first drive cycle. • FREEZE FRAME DATA is available. • DTC is stored in the PCM memory.
POSSIBLE CAUSE	• Front HO2S malfunction • Front HO2S heater malfunction • Fuel injector malfunction • Pressure regulator malfunction • Fuel pump malfunction • Fuel delivery hose clogging or leakage • Fuel filter clogging • Fuel return hose clogging or leakage • Air suction or leakage • PCV valve malfunction • Purge solenoid valve malfunction • Purge solenoid hoses are hooked up incorrectly. • Ignition coil malfunction • Insufficient compression • Engine malfunction

F4

Diagnostic procedure

STEP	INSPECTION		ACTION
1	**VERIFY FREEZE FRAME DATA HAS BEEN RECORDED** • Has FREEZE FRAME DATA been recorded?	Yes	Go to next step.
		No	Record FREEZE FRAME DATA on repair order, then go to next step.
2	**VERIFY RELATED SERVICE INFORMATION AVAILABILITY** • Check for related Service Information availability. • Is any related Service Information available?	Yes	Perform repair or diagnosis according to available Service Information. • If vehicle is not repaired, go to next step.
		No	Go to next step.
3	**VERIFY RELATED PENDING AND STORED DTCs** • Turn ignition key to OFF, then ON (Engine OFF). • Verify pending and stored DTCs using WDS or equivalent. • Is other DTC present?	Yes	Go to appropriate DTC troubleshooting procedures.
		No	Go to next step.
4	**IDENTIFY TRIGGER DTC FOR FREEZE FRAME DATA** • Is DTC P0131, P0132, P0151 and P0152 on FREEZE FRAME DATA?	Yes	Go to next step.
		No	Go to troubleshooting procedures for DTC on FREEZE FRAME DATA.
5	**VERIFY CURRENT INPUT SIGNAL STATUS - IS CONCERN INTERMITTENT OR CONSTANT** • Warm-up engine. • Access O2S11 for P0131 and P0132 or O2S21 for P0151 and P0152 PID using WDS or equivalent. • Verify PID while racing engine (in PARK). • Is PID reading okay? — **Above 0.45 V** when suddenly depress accelerator pedal (rich condition) — **Below 0.45 V** just after release of accelerator pedal (lean condition)	Yes	Go to next step.
		No	Replace front HO2S, then go to Step 19.

STEP	INSPECTION		ACTION
6	**INSPECT LONG TERM FUEL TRIM** • Access LONGFT1 for P0131 and P0132 or LONGFT2 for P0151 and P0152 PID using WDS or equivalent. • Compare it with FREEZE FRAME DATA recorded at Step1. • Was it decreased?	Yes	Engine is driven under rich condition. Go to next step.
		No	Engine is driven under lean condition. Go to step 9.
7	**INSPECT FUEL LINE PRESSURE (EXCESSIVE FUEL LINE PRESSURE)** • Turn ignition key to OFF. • Inspect fuel line pressure. (See F4–66 FUEL LINE PRESSURE INSPECTION.) • Is fuel line pressure okay?	Yes	Go to next step.
		No	Inspect following parts and repair or replace if necessary: • Fuel pump maximum pressure • Fuel return pipe for clogged — If all items above are okay, replace pressure regulator. Then, go to Step 19.
8	**INSPECT PURGE SOLENOID VALVE FOR STUCK OPEN** • Turn ignition key to OFF. • Disconnect both hoses from purge solenoid valve. • Blow air through purge solenoid valve. • Does air blow through?	Yes	Replace purge solenoid valve.
		No	Go to Step 13.
9	**INSPECT PCV VALVE OPERATION** • Inspect PCV valve operation. (See F4–87 PCV VALVE INSPECTION.) • Is PCV valve okay?	Yes	Go to next step.
		No	Replace PCV, then go to Step 19.
10	**INSPECT FUEL LINE PRESSURE (LOW FUEL LINE PRESSURE)** • Turn ignition key to OFF. • Inspect fuel line pressure. (See F4–66 FUEL LINE PRESSURE INSPECTION.) • Is fuel line pressure okay?	Yes	Go to step 13.
		No	Go to next step.
11	**INSPECT FUEL PUMP MAXIMUM PRESSURE** • Stop engine. • Turn ignition key to ON (Engine OFF). • Perform fuel pump maximum pressure test. (See F4–66 FUEL LINE PRESSURE INSPECTION.) • Is fuel pump maximum pressure okay?	Yes	Go to next step.
		No	Inspect fuel pump circuit for open or poor connection. • Repair or replace suspected circuit. • If circuit is okay, replace fuel pump. Then go to Step 19.
12	**INSPECT FUEL LINE FROM FUEL PUMP TO FUEL DELIVERY PUMP** • Visually inspect fuel line for any leakage. • Is any fuel leakage found?	Yes	Replace suspected fuel line, then go to Step 19.
		No	Inspect fuel filters for following: • Restriction or clogging at fuel filter (high-pressure side). • Foreign materials or stain inside fuel filter (low-pressure side) — If restriction or clogging is found at fuel filter (high-pressure side), replace fuel filter. — If foreign materials or stain is found inside fuel filter (low-pressure side), clean of fuel tank and filter. — If all items above are okay, replace pressure regulator. Then, go to Step 19.
13	**CHECK IGNITION COIL OPERATION** • Perform spark test. (See F4–302 Spark Test) • Do all cylinders show blinking condition?	Yes	Go to step 16.
		No	Go to next step.
14	**INSPECT POWER SUPPLY TERMINAL AT IGNITION COIL CONNECTOR** • Disconnect ignition coil connector. • Turn ignition key to ON (Engine OFF). • Measure voltage between ignition coil connector terminal D (harness-side) and body ground. • Is the voltage reading **B+**?	Yes	Go to next step.
		No	Check for open circuit between ignition coil connector and ignition switch. Repair or replace wiring harness, then go to Step 19.

STEP	INSPECTION		ACTION
15	**INSPECT IGNITION COIL RESISTANCE** • Check ignition coil resistance. (See G–16 IGNITION COIL INSPECTION.) • Is coil resistance okay?	Yes	Go to next step.
		No	Replace ignition coil, then go to Step 19.
16	**INSPECT ENGINE COMPRESSION** • Inspect engine compression. • Is it okay?	Yes	Go to next step.
		No	Implement engine overhaul for repairs, then go to next step.
17	**INSPECT FUEL INJECTOR OPERATION** • Turn ignition key to OFF. • Inspect injector. (See F4–78 FUEL INJECTOR INSPECTION.) • Is injector okay?	Yes	Go to next step.
		No	Replace injector, then go to Step 19.
18	**INSPECT SEALING OF ENGINE COOLANT PASSAGE** **Warning** • **Removing radiator cap when radiator is hot is dangerous. Scalding coolant and steam may shoot out and cause serious injury.** • **When removing radiator cap, wrap a thick cloth around and turn it slowly.** • Remove radiator cap. • Implement procedure to bleed air from engine coolant, then run engine at idle. • Is there any small bubble, which makes engine coolant white at filling opening? **Note** • Large bubbles are normal since they are remaining air coming out from engine coolant passage.	Yes	Air gets in from poor sealing to head gasket or other areas between combustion chamber and engine coolant passage. Repair or replace faulty parts, then go to next step.
		No	Go to next step.
19	**VERIFY TROUBLESHOOTING OF DTC P0131, P0132, P0151 OR P0152 COMPLETED** • Make sure to reconnect all disconnected connectors. • Turn ignition key to ON (Engine OFF). • Clear DTC from memory using WDS or equivalent. • Start engine. • Access ECT and RPM PIDs using WDS or equivalent. • Make sure that ECT PID is **above 70 °C {158 °F}**. • Increase and keep engine speed **above 1,500 rpm** for at **least 1 min**. • Is pending code of same DTC present?	Yes	Replace or reprogram PCM. Then go to next step.
		No	Go to next step.
20	**VERIFY AFTER REPAIR PROCEDURE** • Perform “After Repair Procedure”. (See F4–110 AFTER REPAIR PROCEDURE.) • Is there any DTC present?	Yes	Go to applicable DTC inspection. (See F4–113 DTC TABLE.)
		No	Troubleshooting completed.

End Of Ste

DTC P0133, P0153

AME427001084W25

DTC P0133 DTC P0153	HO2S (Front, RH) circuit malfunction HO2S (Front, LH) circuit malfunction
DETECTION CONDITION	• PCM monitors inversion cycle period, lean-to-rich response time and rich-to-lean response time of the sensor. PCM calculates the average of the inversion cycle period-specified inversion cycles, average response time from lean-to-rich, and from rich-to-lean when monitoring conditions are met. If any exceeds threshold, PCM determines that circuit has malfunction. **MONITORING CONDITIONS** — HO2S, HO2S heater and TWC repair verification drive mode — Following conditions are met: • Calculation load **26.6—57.8%** depends on engine speed. • Engine speed **1,500—2,500 rpm** • Engine coolant temperature is **above -10 °C {14 °F}**. **Diagnostic support note** • This is an intermittent monitor. (OXYGEN SENSOR) • MIL illuminates if PCM detects to either above malfunction conditions in two consecutive drive cycles. • DIAGNOSTIC MONITORING TEST RESULTS is available. • PENDING CODE is available if PCM detects the above malfunction condition during first drive cycle. • FREEZE FRAME DATA is available. • DTC is stored in the PCM memory.
POSSIBLE CAUSE	• Front HO2S deterioration • Front HO2S heater malfunction • Pressure regulator malfunction • Fuel pump malfunction • Fuel filter clogged or restricted • Fuel leakage on fuel line from fuel distribution pipe and fuel pump • Fuel return hose clogged • Leakage exhaust system • Purge solenoid valve malfunction • Purge solenoid hoses improper connection • Insufficient compression • Engine malfunction

Diagnostic procedure

STEP	INSPECTION		ACTION
1	**VERIFY FREEZE FRAME DATA HAS BEEN RECORDED** • Has FREEZE FRAME DATA been recorded?	Yes	Go to next step.
		No	Record FREEZE FRAME DATA on repair order, then go to next step.
2	**VERIFY RELATED SERVICE INFORMATION AVAILABILITY** • Check for related Service Information availability. • Is any related Service Information available?	Yes	Perform repair or diagnosis according to available Service Information. • If vehicle is not repaired, go to next step.
		No	Go to next step.
3	**VERIFY RELATED PENDING AND STORED DTCS** • Turn ignition key to OFF, then ON (Engine OFF). • Verify pending and /or stored DTCs using WDS or equivalent. • Is the following DTC also present? — P0443 with P0133 — P0443 with P0153	Yes	Go to appropriate DTC troubleshooting procedures, then go to Step 14.
		No	Go to next step.
4	**IDENTIFY TRIGGER DTC FOR FREEZE FRAME DATA** • Is DTC P0133 or P0153 on FREEZE FRAME DATA?	Yes	Go to next step.
		No	Go to troubleshooting procedures for DTC on FREEZE FRAME DATA. (See F4–113 DTC TABLE.)
5	**VERIFY CURRENT INPUT SIGNAL STATUS** • Warm up engine. • Access O2S11 for P0133 or O2S21 for P0153 PID using WDS or equivalent. • Check PID under following accelerator pedal conditions (in PARK). • Is PID reading okay? — **Above 0.55 V** when suddenly depress accelerator pedal (rich condition). — **Below 0.55 V** just after release of accelerator pedal (lean condition).	Yes	Go to step 8.
		No	Go to next step.

STEP	INSPECTION		ACTION
6	**INSPECT INSTALLATION OF FRONT HO2S** • Check if front HO2S is loosely installed. • Is sensor installed securely?	Yes	Go to next step.
		No	Retighten sensor, then go to Step 14.
7	**INSPECT GAS LEAKAGE FROM EXHAUST SYSTEM** • Visually check if any gas leakage is found between exhaust manifold and front HO2S. • Is there any gas leakage?	Yes	Repair or replace any faulty exhaust parts, then go to Step 14.
		No	Replace sensor, then go to Step 14.
8	**INSPECT LONG TERM FUEL TRIM** • Access following PIDs — For P0133: LONGFT1 — For P0153: LONGFT2 • Compare it with FREEZE FRAME DATA (FFD) recorded at Step 1. • Is it below FFD value?	Yes	Engine is driven under rich condition. Go to next step.
		No	Engine is driven under lean condition. Go to step 10.
9	**INSPECT FUEL LINE PRESSURE (Excessive fuel line pressure)** • Turn ignition key to OFF. • Inspect fuel line pressure while engine running. (See F4–66 FUEL LINE PRESSURE INSPECTION.) • Is fuel line pressure okay?	Yes	Go to next step.
		No	Inspect fuel pump maximum pressure and fuel return pipe for clogged. (See F4–74 FUEL PUMP UNIT INSPECTION.) • If any problem is found, repair or replace suspected parts. • If all items above are okay, replace pressure regulator. Then go to Step 14.
10	**INSPECT FUEL LINE PRESSURE (Low fuel line pressure)** • Turn ignition key to OFF. • Inspect fuel line pressure while engine running. (See F4–66 FUEL LINE PRESSURE INSPECTION.) • Is fuel line pressure okay?	Yes	Go to step 14.
		No	Go to next step.
11	**INSPECT FUEL PUMP MAXIMUM PRESSURE** • Perform fuel pump maximum pressure test. (See F4–74 FUEL PUMP UNIT INSPECTION.) • Is fuel pump maximum pressure okay?	Yes	Go to next step.
		No	Inspect fuel pump circuit for open or poor connection. • Repair or replace suspected circuit. • If circuit is okay, replace fuel pump. Then go to Step 14.
12	**INSPECT FUEL LINE FROM FUEL PUMP TO FUEL DELIVERY PIPE** • Visually inspect fuel line for any leakage. • Is any fuel leakage found?	Yes	Replace suspected fuel line, then go to Step 14.
		No	Inspect fuel filters for follows: • Restriction or clogging at fuel filter (high-pressure side) • Foreign materials or stain inside fuel filter (low-pressure side) Perform following actions as result. • If restriction or clogging is found at fuel filter (high-pressure side), replace fuel filter. • If foreign materials or stain is found inside fuel filter (low-pressure side), clean of fuel tank and filter. • If all items above are okay, replace pressure regulator. Then go to Step 14.
13	**INSPECT SEALING OF ENGINE COOLANT PASSAGE** **Warning** • **Removing radiator cap when radiator is hot is dangerous. Scalding coolant and steam may shoot out and cause serious injury.** • **When removing radiator cap, wrap a thick cloth around and turn it slowly.** • Remove radiator cap. • Implement procedure to bleed air from engine coolant, then run engine at idle. • Is there any small bubble, which makes engine coolant white at filling opening? **Note** • Large bubbles are normal since they are remaining air coming out from engine coolant passage.	Yes	Air gets in from poor sealing on head gasket or other areas between combustion chamber and engine coolant passage. Repair or replace faulty parts, then go to next step.
		No	Go to next step.

STEP	INSPECTION		ACTION
14	**VERIFY TROUBLESHOOTING OF DTC P0133 or P0153 COMPLETED** • Make sure to reconnect all disconnected connectors. • Turn ignition key to ON (Engine OFF). • Clear DTC from memory using WDS or equivalent. • Start engine. • Run PCM adaptive memory procedure drive mode and HO2S heater, HO2S, and TWC repair verification drive mode. (European (L.H.D.) specs.) (See F4–110 OBD DRIVE MODE.) • Run PCM adaptive memory procedure drive mode and HO2S heater, HO2S, and EGR system repair verification drive mode. (Australian, General (L.H.D. R.H.D.) specs.) (See F4–110 OBD DRIVE MODE.) • Stop vehicle and access ON BOARD SYSTEM READINESS TEST to inspect DRIVE MODE completion status. • Verify RFC changes to YES for OXYGEN SENSOR. — If not, run DRIVE MODE again. • Access DIAGNOSTIC MONITORING TEST RESULTS. • Verify following TEST # values: • (See F4–110 Diagnostic monitoring test results access procedure.) — For P0133: 10:02:11 or 10:03:11 — For P0153: 10:02:21 or 10:03:21 • Are they all below MAX value?	Yes	Replace PCM, then go to next step.
		No	Go to next step.
16	**VERIFY AFTER REPAIR PROCEDURE** • Perform “After Repair Procedure”. (See F4–110 AFTER REPAIR PROCEDURE.) • Is there any DTC present?	Yes	Go to applicable DTC inspection. (See F4–113 DTC TABLE.)
		No	Troubleshooting completed.

End Of Ste

DTC P0134, P0154

AME427001084W26

DTC P0134 DTC P0154	**HO2S (Front, RH) circuit no activity detected** **HO2S (Front, LH) circuit no activity detected**
DETECTION CONDITION	• PCM monitors input voltage from HO2S (Front) when the following monitoring conditions are met. If input voltage from sensor never **exceed 0.55 V** for **94 s**, PCM determines that sensor circuit is not activated. **MONITORING CONDITIONS** — HO2S, HO2S heater and TWC repair verification drive mode — Following conditions are met • Engine speed is **above 1,500 rpm**. • Engine coolant temperature is **above 70 °C {158 °F}**. **Diagnostic support note** • This is a continuous monitor (CCM). • MIL illuminates if PCM detects the above malfunction condition in two consecutive drive cycles. • PENDING CODE is available if PCM detects the above malfunction condition during first drive cycle. • FREEZE FRAME DATA is available. • DTC is stored in the PCM memory.
POSSIBLE CAUSE	• HO2S (Front) deterioration • HO2S heater (Front) malfunction • Leakage exhaust system • Open or short to ground circuit between HO2S terminal and PCM terminal — For P0134: HO2S (Front, RH) terminal A and PCM terminal 60 — For P0154: HO2S (Front, LH) terminal B and PCM terminal 87 • Insufficient compression • Engine malfunction

DTC P0134 DTC P0154	HO2S (Front, RH) circuit no activity detected HO2S (Front, LH) circuit no activity detected

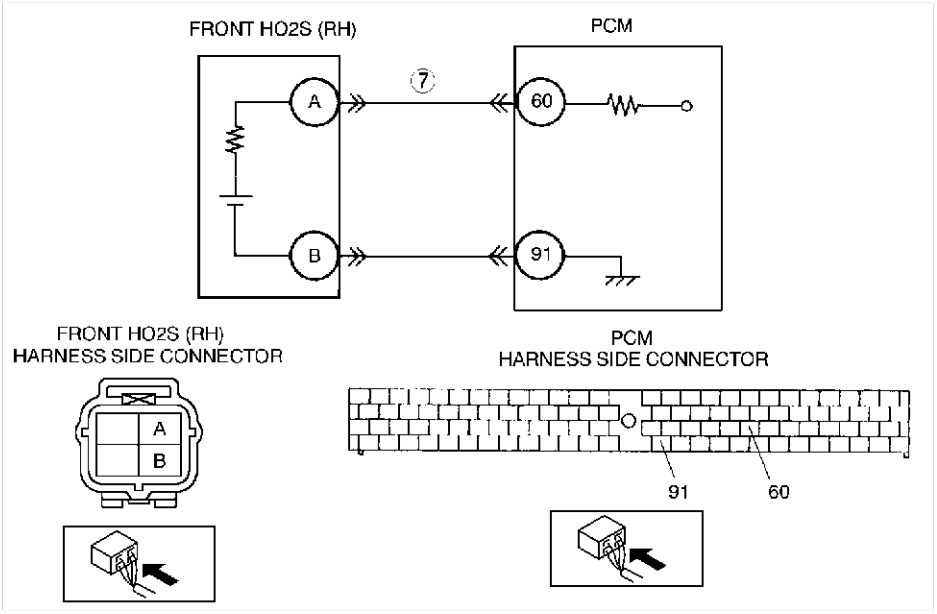

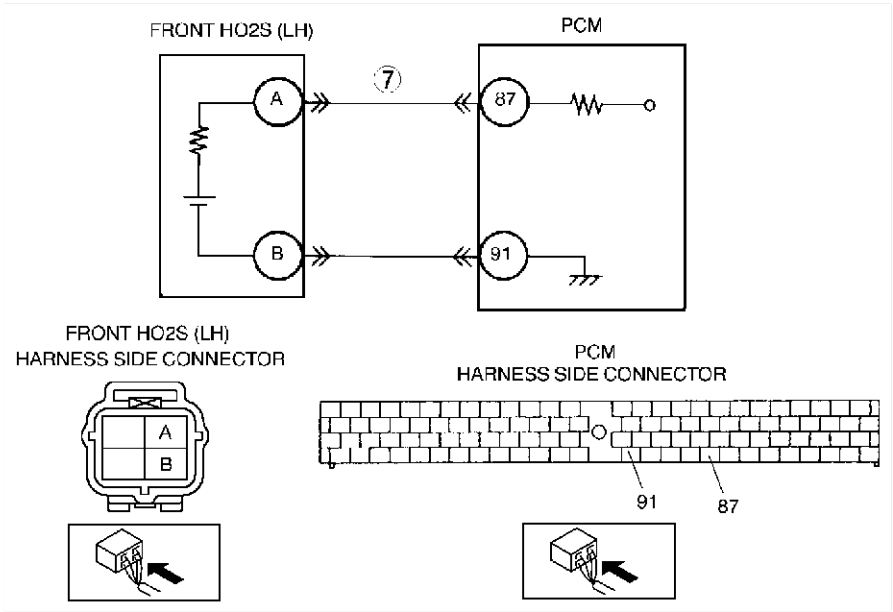

Diagnostic procedure

STEP	INSPECTION		ACTION
1	**VERIFY FREEZE FRAME DATA HAS BEEN RECORDED** • Has FREEZE FRAME DATA been recorded?	Yes	Go to next step.
		No	Record FREEZE FRAME DATA on repair order, then go to next step.
2	**VERIFY RELATED SERVICE INFORMATION AVAILABILITY** • Check for related Service Information availability. • Is any related Service Information available?	Yes	Perform repair or diagnosis according to available Service Information. • If vehicle is not repaired, go to next step.
		No	Go to next step.

STEP	INSPECTION		ACTION
3	**VERIFY RELATED PENDING AND STORED DTCS** **Note** • If fuel monitor DTC, DTC P0131, P0132, P0151 or P0152 is retrieved, ignore it until P0134 or P0154 is fixed. • Turn ignition key to OFF, then ON (Engine OFF). • Verify pending and stored DTCs using WDS or equivalent. • Is other DTC present?	Yes	Go to appropriate DTC troubleshooting procedures.
		No	Go to next step.
4	**IDENTIFY TRIGGER DTC FOR FREEZE FRAME DATA** • Is DTC P0134 or P0154 on FREEZE FRAME DATA?	Yes	Go to next step.
		No	Go to troubleshooting procedures for DTC on FREEZE FRAME DATA. (See F4–113 DTC TABLE.)
5	**VERIFY CURRENT INPUT SIGNAL STATUS** • Warm up engine. • Access O2S11 for P0134 or O2S21 for P0154 PID using WDS or equivalent. • Verify PID while racing engine (in PARK or NEUTRAL). • Is PID reading okay? — **Above 0.55 V** when suddenly depress accelerator pedal (rich condition). — **Below 0.55 V** just after release of accelerator pedal (lean condition)	Yes	Go to step 8.
		No	Go to next step.
6	**INSPECT INSTALLATION OF HO2S (Front)** • Check if HO2S (Front) is loosely installed. • Is sensor installed securely?	Yes	Go to next step.
		No	Install sensor securely, then go to Step 10.
7	**INSPECT GAS LEAKAGE FROM EXHAUST SYSTEM** • Visually check if any gas leakage is found between exhaust manifold and HO2S (Front). • Is there any gas leakage?	Yes	Repair or replace any faulty exhaust parts, then go to Step 10.
		No	• Inspect the following harnesses for open or short to ground circuit, repair or replace harness if necessary — FRONT HO2S (RH) terminal A (harness-side) to PCM terminal 60 (harness-side) — FRONT HO2S (LH) terminal A (harness-side) to PCM terminal 87 (harness-side) • Repair or replace harness if necessary. • If all items above are okay, replace faulty sensor. Then go to Step 10.

STEP	INSPECTION		ACTION
8	**INSPECT SEALING OF ENGINE COOLANT PASSAGE** **Warning** • **Removing radiator cap when radiator is hot is dangerous. Scalding coolant and steam may shoot out and cause serious injury.** • **When removing radiator cap, wrap a thick cloth around and turn it slowly.** • Remove radiator cap. • Implement procedure to bleed air from engine coolant, then run engine at idle. • Is there any small bubble, which makes engine coolant white at filling opening? **Note** • Large bubbles are normal since they are remaining air coming out from engine coolant passage.	Yes	Air gets in from poor sealing on head gasket or other areas between combustion chamber and engine coolant passage. Repair or replace faulty parts, then go to Step 10.
		No	Go to next step.
9	**INSPECT ENGINE COMPRESSION** • Inspect engine compression. • Is it okay?	Yes	Go to next step.
		No	Implement engine overhaul for repairs, then go to next step.
10	**VERIFY TROUBLESHOOTING OF DTC P0134 or P0154 COMPLETED** • Make sure to reconnect all disconnected connectors. • Turn ignition key to ON (Engine OFF). • Clear DTC from memory using WDS or equivalent. • Start engine. • Access RPM and ECT PIDs using WDS or equivalent. • Verify that ECT PID is reading **above 70 °C {158 °F}**. • Increase engine speed **above 1,500 rpm** (RPM PID reading) **above 95 s**. • Is PENDING CODE of same DTC present?	Yes	Replace PCM, then go to next step.
		No	Go to next step.
11	**VERIFY AFTER REPAIR PROCEDURE** • Perform “After Repair Procedure”. (See F4–110 AFTER REPAIR PROCEDURE.) • Is there any DTC present?	Yes	Go to applicable DTC inspection. (See F4–113 DTC TABLE.)
		No	Troubleshooting completed.

End Of Sie

F4

DTC P0138, P0158

AME427001084W27

European (L.H.D.) Specs.

DTC P0138 **DTC P0158**	**HO2S (Rear, RH) circuit high input** **HO2S (Rear, LH) circuit high input**
DETECTION CONDITION	• PCM monitors input voltage from HO2S (Rear) when monitoring conditions are met. If input voltage from sensor is **above 0.45 V** for **6 s** during deceleration fuel cut, PCM determines that the circuit input is high. **Diagnostic support note** • This is a continuous monitor (CCM). • MIL illuminates if PCM detects the above malfunction condition in two consecutive drive cycles. • PENDING CODE is available if PCM detects the above malfunction condition during first drive cycle. • FREEZE FRAME DATA is available. • DTC is stored in the PCM memory.
POSSIBLE CAUSE	• HO2S (Rear) malfunction • Short to power circuit in wiring between HO2S (Rear) terminal and PCM terminal — For HO2S (Rear, RH): A and 35 — For HO2S (Rear, LH): A and 61

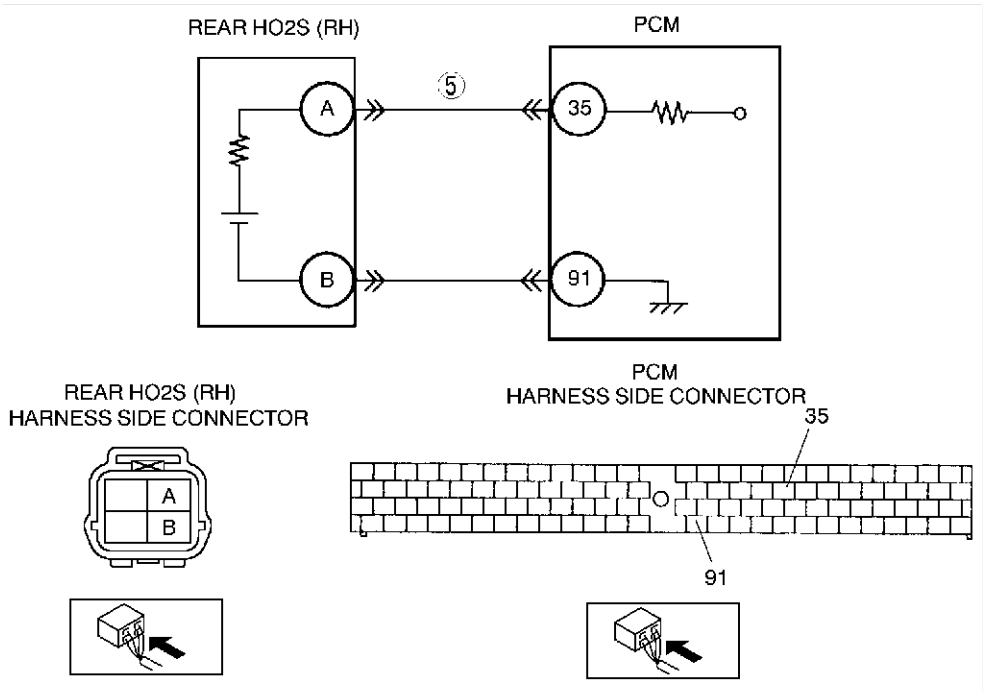

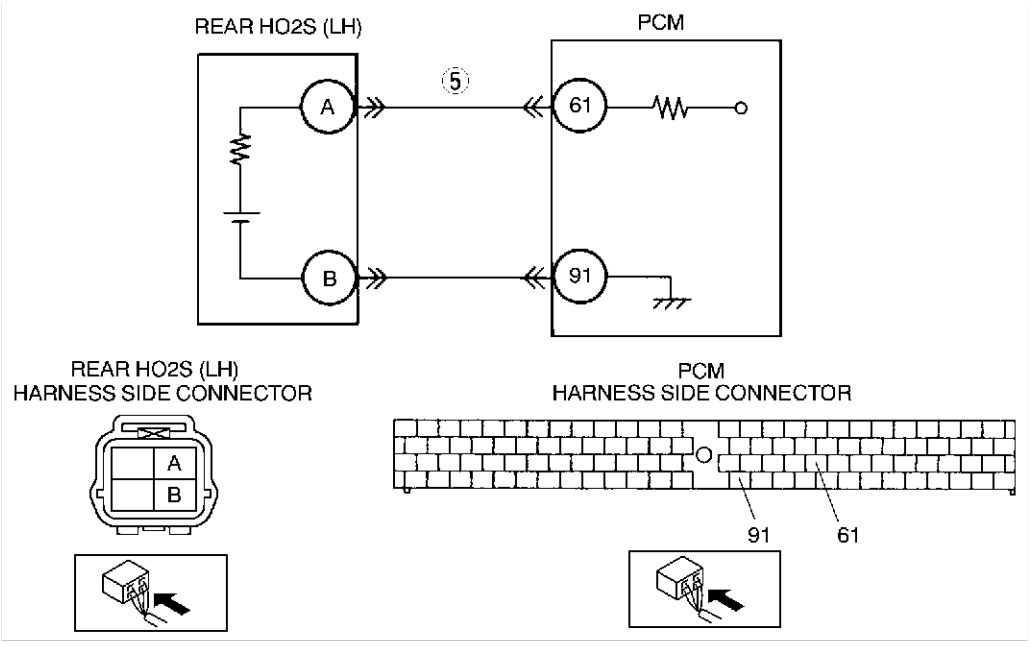

Diagnostic procedure

STEP	INSPECTION		ACTION
1	**VERIFY FREEZE FRAME DATA HAS BEEN RECORDED** • Has FREEZE FRAME DATA been recorded?	Yes	Go to next step.
		No	Record FREEZE FRAME DATA on repair order, then go to next step.
2	**VERIFY RELATED SERVICE INFORMATION AVAILABILITY** • Check for related Service Information availability. • Is any related Service Information available?	Yes	Perform repair or diagnosis according to available Service Information. • If vehicle is not repaired, go to next step.
		No	Go to next step.
3	**VERIFY RELATED PENDING OR STORED DTCS** • Turn ignition key to OFF, then ON (Engine OFF). • Verify pending code or stored DTCs using WDS or equivalent. • Is other DTC present?	Yes	Go to appropriate DTC troubleshooting procedures. (See F4–113 DTC TABLE.)
		No	Go to next step.
4	**IDENTIFY TRIGGER DTC FOR FREEZE FRAME DATA** • Is DTC P0138 (HO2S (Rear, RH)) or P0158 (HO2S (Rear, LH)) on FREEZE FRAME DATA?	Yes	Go to next step.
		No	Go to troubleshooting procedures for DTC on FREEZE FRAME DATA. (See F4–113 DTC TABLE.)
5	**INSPECT HO2S (Rear) SIGNAL CIRCUIT FOR SHORT TO POWER SUPPLY CIRCUIT** • Turn ignition key to OFF. • Disconnect HO2S (Rear, RH) for P0138 or HO2S (Rear, LH) for P0158 connector. • Turn ignition key to ON (Engine OFF). • Measure voltage between HO2S (Rear, RH) terminal A/HO2S (Rear, LH) terminal A (harness-side) and body ground. • Is any voltage reading?	Yes	Replace short to power supply circuit, then go to Step 7.
		No	Go to next step.
6	**VERIFY CURRENT INPUT SIGNAL STATUS** • Start engine. • Access O2S12 for P0138 or O2S22 for P0158 PID using WDS or equivalent. • Verify PID while racing engine at least **10 times** (in PARK or NEUTRAL). • Does PID reading stay **above 0.45 V**?	Yes	Repair or replace sensor, then go to next step.
		No	Go to next step.
7	**VERIFY TROUBLESHOOTING OF DTC P0138 or P0158 COMPLETED** • Make sure to reconnect all disconnected connectors. • Turn ignition key to ON (Engine OFF). • Clear DTC from memory using WDS or equivalent. • Run PCM adaptive memory procedure drive mode and HO2S heater, HO2S, and TWC repair verification drive mode. (See F4–110 OBD DRIVE MODE.) • Is PENDING CODE of same DTC present.	Yes	Replace PCM, then go to next step.
		No	Go to next step.
8	**VERIFY AFTER REPAIR PROCEDURE** • Perform “After Repair Procedure” (See F4–110 AFTER REPAIR PROCEDURE.) • Is there any DTC present?	Yes	Go to applicable DTC inspection. (See F4–113 DTC TABLE.)
		No	Troubleshooting completed.

End Of Se

DTC P0140, P0160

AME427001084W28

European (L.H.D.) Specs.

DTC P0140 **DTC P0160**	**HO2S (Rear, RH) circuit no activity detected** **HO2S (Rear, LH) circuit no activity detected**
DETECTION CONDITION	• PCM monitors input voltage from HO2S (Rear) when the following monitoring conditions are met. If input voltage from sensor never **exceed 0.55 V** for **30 s**, PCM determines that sensor circuit is not activated. **MONITORING CONDITIONS** — HO2S, HO2S heater and TWC repair verification drive mode — Following conditions are met: • Engine speed is **above 1,500 rpm**. • Engine coolant temperature is **above 70 °C {158 °F}**. **Diagnostic support note** • This is a continuous monitor (CCM). • MIL illuminates if PCM detects the above malfunction condition in two consecutive drive cycles. • PENDING CODE is available if PCM detects the above malfunction condition during first drive cycle. • FREEZE FRAME DATA is available. • DTC is stored in the PCM memory.
POSSIBLE CAUSE	• HO2S (Rear) deterioration • HO2S heater (Rear) malfunction • Leakage exhaust system • Open or short to ground circuit between HO2S (Rear) terminal A and PCM terminal 35 for P0140 or 61 for P0160 • Insufficient compression • Engine malfunction

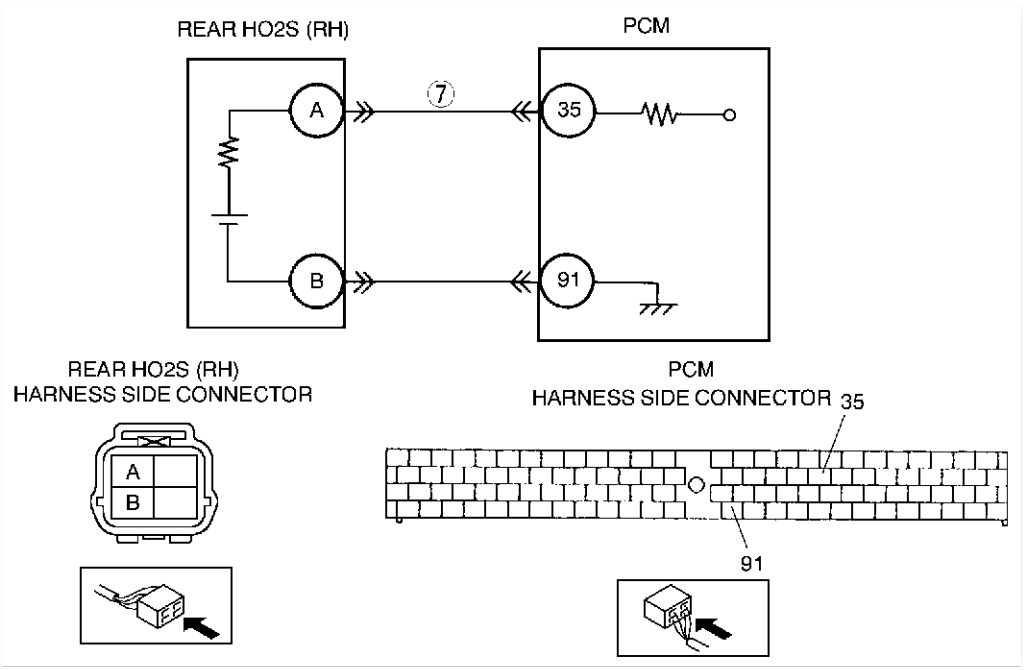

DTC P0140 DTC P0160	HO2S (Rear, RH) circuit no activity detected HO2S (Rear, LH) circuit no activity detected

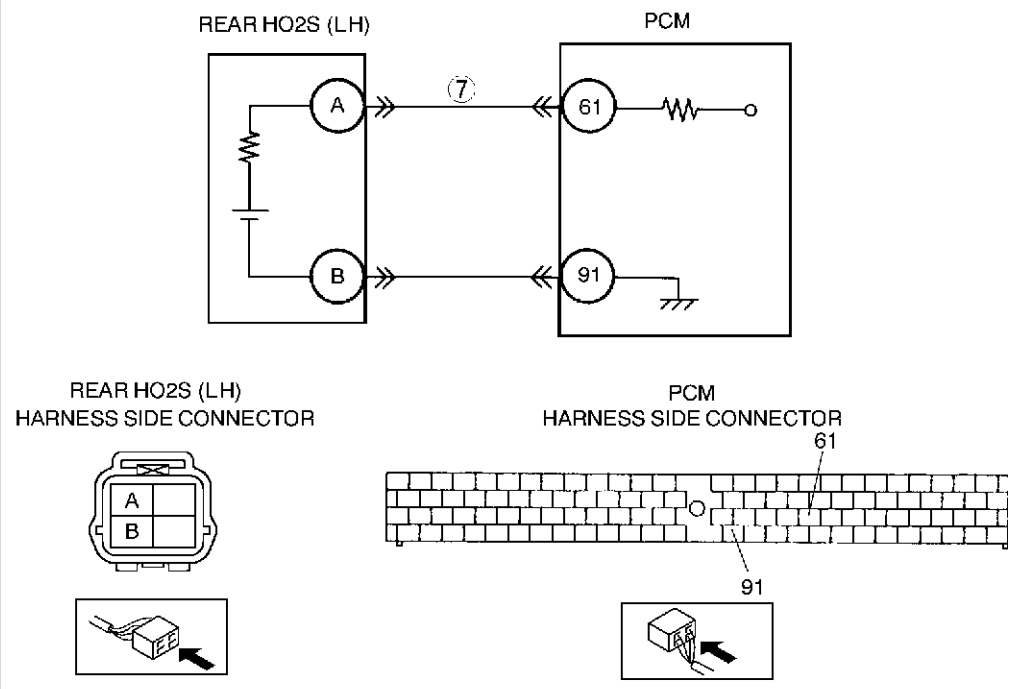

Diagnostic procedure

STEP	INSPECTION		ACTION
1	**VERIFY FREEZE FRAME DATA HAS BEEN RECORDED** • Has FREEZE FRAME DATA been recorded?	Yes	Go to next step.
		No	Record FREEZE FRAME DATA on repair order, then go to next step.
2	**VERIFY RELATED SERVICE INFORMATION AVAILABILITY** • Check for related Service Information availability. • Is any related Service Information available?	Yes	Perform repair or diagnosis according to available Service Information. • If vehicle is not repaired, go to next step.
		No	Go to next step.
3	**VERIFY RELATED PENDING AND STORED DTCS** **Note** • If fuel monitor DTC, DTC P0131, P0132, P0151 or P0152 is retrieved, ignore it until P0140 or P0160 is fixed. • Turn ignition key to OFF, then ON (Engine OFF). • Verify pending and stored DTCs using WDS or equivalent. • Is other DTC present?	Yes	Go to appropriate DTC troubleshooting procedures. (See F4–113 DTC TABLE.)
		No	Go to next step.
4	**IDENTIFY TRIGGER DTC FOR FREEZE FRAME DATA** • Is DTC P0140 or P0160 on FREEZE FRAME DATA?	Yes	Go to next step.
		No	Go to troubleshooting procedures for DTC on FREEZE FRAME DATA. (See F4–113 DTC TABLE.)
5	**VERIFY CURRENT INPUT SIGNAL STATUS** • Warm up engine. • Access O2S12 for P0140 or O2S22 for P0160 PID using WDS or equivalent. • Verify PID while racing engine at least **10 times** (in PARK or NEUTRAL). • Is PID reading okay? — **Above 0.55 V** at least once during engine racing.	Yes	Go to step 8.
		No	Go to next step.

F4

STEP	INSPECTION		ACTION
6	**INSPECT INSTALLATION OF HO2S (REAR)** • Check if HO2S (Rear) is loosely installed. • Is sensor installed securely?	Yes	Go to next step.
		No	Install sensor securely, then go to Step 10.
7	**INSPECT GAS LEAKAGE FROM EXHAUST SYSTEM** • Visually check if any gas leakage is found between exhaust pipe and HO2S (Rear). • Is there any gas leakage?	Yes	Repair or replace any faulty exhaust parts, then go to Step 10.
		No	• Inspect the following harnesses for open or short to ground circuit, repair or replace harness if necessary. — HO2S (Rear, RH) terminal A (harness-side) to PCM terminal 35 (harness-side) — HO2S (Rear, LH) terminal A (harness-side) to PCM terminal 61 (harness-side) • Repair or replace harness if necessary. • If all items above are okay, replace faulty sensor. Then go to Step 10.
8	**INSPECT SEALING OF ENGINE COOLANT PASSAGE** **Warning** • **Removing radiator cap when radiator is hot is dangerous. Scalding coolant and steam may shoot out and cause serious injury.** • **When removing radiator cap, wrap a thick cloth around and turn it slowly.** • Remove radiator cap. • Implement procedure to bleed air from engine coolant, then run engine at idle. • Is there any small bubble, which makes engine coolant white at filling opening? **Note** • Large bubbles are normal since they are remaining air coming out from engine coolant passage.	Yes	Air gets in from poor sealing on head gasket or other areas between combustion chamber and engine coolant passage. Repair or replace faulty parts, then go to Step 10.
		No	Go to next step.
9	**INSPECT ENGINE COMPRESSION** • Inspect engine compression. • Is it okay?	Yes	Go to next step.
		No	Implement engine overhaul for repairs, then go to next step.
10	**VERIFY TROUBLESHOOTING OF DTC P0140 or P0160 COMPLETED** • Make sure to reconnect all disconnected connectors. • Turn ignition key to ON (Engine OFF). • Clear DTC from memory using WDS or equivalent. • Access RPM and ECT PIDs using WDS or equivalent. • Verify that ECT PID is reading **above 70 °C {158 °F}**. • Increase engine speed **above 1,500 rpm** (RPM PID reading) above **30 s**. • Is PENDING CODE P0140 (HO2S (Rear, RH)) or P0160 (HO2S (Rear, LH)) present?	Yes	Replace PCM, then go to next step.
		No	Go to next step.
11	**VERIFY AFTER REPAIR PROCEDURE** • Perform “After Repair Procedure”. (See F4–110 AFTER REPAIR PROCEDURE.) • Is there any DTC present?	Yes	Go to applicable DTC inspection. (See F4–113 DTC TABLE.)
		No	Troubleshooting completed.

End Of Ste

DTC P0171, P0174

AME427001084W29

DTC P0171 DTC P0174	**Fuel trim system (RH) too lean** **Fuel trim system (LH) too lean**
DETECTION CONDITION	• PCM monitors short term fuel trim (SHRTFT) and long term fuel trim (LONGFT) values when closed loop fuel control. If fuel trim exceeds preprogrammed criteria, PCM determines that the fuel system is too lean. **Diagnostic support note** • This is a continuous monitor. (FUEL SYSTEM) • MIL illuminates if PCM detects the above malfunction conditions in two consecutive drive cycles. • PENDING CODE is available if PCM detects the above malfunction conditions during first drive cycle. • FREEZE FRAME DATA is available. • DTC is stored in the PCM memory.
POSSIBLE CAUSE	• Misfire • Front HO2S deterioration • Front HO2S heater malfunction • Pressure regulator malfunction • Fuel pump malfunction • Fuel filter clogged or restricted • Fuel leakage on fuel line from fuel delivery pipe and fuel pump • Fuel return hose clogged • Leakage exhaust system • Purge solenoid valve malfunction • Purge solenoid hoses improper connection • Insufficient compression

F4

Diagnostic procedure

STEP	INSPECTION		ACTION
1	**VERIFY FREEZE FRAME DATA HAS BEEN RECORDED** • Has FREEZE FRAME DATA been recorded?	Yes	Go to next step.
		No	Record FREEZE FRAME DATA on repair order, then go to next step.
2	**VERIFY RELATED SERVICE INFORMATION AVAILABILITY** • Check for related Service Information availability. • Is any related Service Information available?	Yes	Perform repair or diagnosis according to available Service Information. • If vehicle is not repaired, go to next step.
		No	Go to next step.
3	**VERIFY RELATED PENDING CODE OR STORED DTCS** • Turn ignition key to OFF, then ON (Engine OFF). • Verify related PENDING CODE or stored DTCs. • Is other DTCs present?	Yes	If misfire DTC is present, go to step 8. If other DTC is present, go to appropriate DTC troubleshooting procedures. (See F4–113 DTC TABLE.)
		No	If drive ability concern is present, go to Step 8. If not, go to next step.
4	**IDENTIFY TRIGGER DTC FOR FREEZE FRAME DATA** • Is DTC P0171or P0174 on FREEZE FRAME DATA?	Yes	Go to next step.
		No	Go to troubleshooting procedures for DTC on FREEZE FRAME DATA.
5	**VERIFY CURRENT INPUT SIGNAL STATUS (IGNITION KEY TO ON/IDLE)** • Access ECT, MAF, TP and VSS PIDs using WDS or equivalent. (See F4–91 PCM Inspection Using the SST (WDS or equivalent).) • Is there any signal that is far out of specification when ignition key is ON and engine runs?	Yes	Inspect suspected sensor and excessive resistance in related wiring harnesses. Repair or replace if necessary. Then go to Step 18.
		No	Go to next step.
6	**VERIFY CURRENT INPUT SIGNAL STATUS UNDER TROUBLE CONDITION** • Inspect same PIDs as Step 5 while simulating FREEZE FRAME DATA condition. • Is there any input signal which causes drastic changes?	Yes	Inspect suspected sensor and related wiring harnesses, and repair or replace it. Then go to Step 18.
		No	Go to next step.

STEP	INSPECTION		ACTION
7	**VERIFY CURRENT INPUT SIGNAL STATUS OF FRONT HO2S (RH, LH)** • Access O2S11 for P0171 or O2S21 for P0174 PID using WDS or equivalent. • Check PID under following accelerator pedal condition (in PARK). • Is PID reading okay? — **Above 0.45 V** when suddenly depress accelerator pedal (rich condition). — **Below 0.45 V** just after release of accelerator pedal (lean condition)	Yes	Inspect for air suction at followings due to cracks, damages and loosening parts: • From air cleaner to throttle body • From throttle body to dynamic chamber • From dynamic chamber to intake manifold • Vacuum hoses **Note** • Engine speed may change when rust penetrating agent is sprayed on the air suction area. Repair or replace any faulty part, then go to Step 18.
		No	Visually inspect for any gas leakage between exhaust manifold and front HO2S. • If there is no leakage, replace FRONT HO2S. Then go to Step 18.
8	**INSPECT MAF PID** • Start engine. • Access MAF PID using WDS or equivalent. • Verify that MAF PID changes quickly according to race engine RPM. • Is MAF PID response okay?	Yes	Go to next step.
		No	Replace Mass air flow sensor, then go to Step 18.
9	**INSPECT FOR EXCESSIVE AIR SUCTION OF INTAKE AIR SYSTEM** • Visually inspect for loosen, cracks or damages hoses on intake air system. • Is there any malfunction?	Yes	Repair or replace source of air suction, then go to Step 18.
		No	Go to next step.
10	**INSPECT FUEL LINE PRESSURE** • Turn ignition key to OFF. **Note** • If engine won't start, inspect fuel line pressure with ignition key ON. • Inspect fuel line pressure while engine running. (See F4–66 FUEL LINE PRESSURE INSPECTION.) • Is fuel line pressure okay?	Yes	Go to step 13.
		No	• If fuel line pressure is excess high: Inspect fuel pump maximum pressure and Fuel return line for clogged. — If any problem is found, repair or replace suspected parts. — If all items above are okay, replace pressure regulator. Then go to Step 18. • If fuel line pressure is too low: Go to next step.
11	**INSPECT FUEL PUMP MAXIMUM PRESSURE** • Perform fuel pump maximum pressure test. (See F4–74 FUEL PUMP UNIT INSPECTION.) • Is fuel pump maximum pressure okay?	Yes	Go to next step.
		No	Inspect fuel pump circuit for open or poor connection. Repair or replace suspected circuit, then go to Step 18. • If circuit is okay, replace fuel pump. Then go to Step 18.
12	**INSPECT FUEL LINE FROM FUEL PUMP TO FUEL DELIVERY PIPE** • Visually inspect fuel line for any leakage. • Is any fuel leakage found?	Yes	Replace suspected fuel line, then go to Step 18.
		No	Inspect fuel filters for follows: • Restriction or clogging at fuel filter (high-pressure side). • Foreign materials or stain inside fuel filter (low-pressure side) Perform following actions as result. • If restriction or clogging is found at fuel filter (high-pressure side), replace fuel filter. • If foreign materials or stain is found inside fuel filter (low-pressure side), clean of fuel tank and filter. • If all items above are okay, replace pressure regulator. Then go to Step 18.

STEP	INSPECTION		ACTION
13	**INSPECT FUEL INJECTOR OPERATION** • Remove fuel injector from suspected bank. • Swap injector with injector on other bank. • Start engine. • Is fuel trim system lean DTC for bank which has a suspected fuel injector?	Yes	Replace injector, then go to Step 18.
		No	Go to next step.
14	**CHECK IGNITION COIL OPERATION** • Perform spark test. (See F4–302 Spark Test) • Do all cylinders show blinking condition?	Yes	Go to step 17.
		No	Go to next step.
15	**INSPECT POWER SUPPLY TERMINAL AT IGNITION COIL CONNECTOR** • Disconnect ignition coil connector. • Turn ignition key to ON (Engine OFF). • Check voltage at ignition coil connector terminal D (harness-side) and body ground. • Is there voltage reading **B+**?	Yes	Go to next step.
		No	Check for open circuit between ignition coil connector and ignition switch. Repair or replace wiring harness, then go to Step 18.
16	**INSPECT IGNITION COIL RESISTANCE** • Check ignition coil resistance. (See G–16 IGNITION COIL INSPECTION.) • Is coil resistance okay?	Yes	Go to next step.
		No	Replace ignition coil, then go to Step 18.
17	**INSPECT ENGINE COMPRESSION** • Inspect engine compression. • Is it okay?	Yes	Go to next step.
		No	Implement engine overhaul for repairs, then go to next step.
18	**VERIFY TROUBLESHOOTING OF DTC P0171 or P0174 COMPLETED** • Make sure to reconnect all disconnected connectors. • Clear DTC from memory using WDS or equivalent. • Run PCM adaptive memory procedure drive mode and HO2S heater, HO2S, and TWC repair verification drive mode. (European (L.H.D.) specs.) (See F4–110 OBD DRIVE MODE.) • Run PCM adaptive memory procedure drive mode and HO2S heater, HO2S, and EGR system repair verification drive mode. (Australian, General (L.H.D. R.H.D.) specs.) (See F4–110 OBD DRIVE MODE.) • Stop vehicle and access PID/DATA MONITOR RECORDED to inspect DRIVE MODE completion status. • Verify RFCFLAG changes to OFF for FUEL SYSTEM MONITOR. If not, run DRIVE MODE again. • Access PENDING CODE. • Is PENDING CODE of same DTC present?	Yes	Replace PCM, then go to next step.
		No	Go to next step.
19	**VERIFY AFTER REPAIR PROCEDURE** • Perform “After Repair Procedure”. (See F4–110 AFTER REPAIR PROCEDURE.) • Is there any DTC present?	Yes	Go to applicable DTC inspection. (See F4–113 DTC TABLE.)
		No	Troubleshooting completed.

End Of Ste

F4

DTC P0172, P0175

AME427001084W30

DTC P0172 **DTC P0175**	**Fuel trim system (RH) too rich** **Fuel trim system (LH) too rich**
DETECTION CONDITION	• PCM monitors short fuel trim (SHRTFT) and long fuel trim (LONGFT) values when closed loop fuel control. If fuel trim exceeds preprogrammed criteria, PCM determines that the fuel system is too rich. **Diagnostic support note** • This is a continuous monitor. (FUEL SYSTEM) • MIL illuminates if PCM detects the above malfunction conditions in two consecutive drive cycles. • PENDING CODE is available if PCM detects the above malfunction condition during first drive cycle. • FREEZE FRAME DATA is available. • DTC is stored in the PCM memory.
POSSIBLE CAUSE	• Misfire • Front HO2S deterioration • Front HO2S heater malfunction • Pressure regulator malfunction • Fuel pump malfunction • Fuel return hose clogged • Purge solenoid valve malfunction • Purge solenoid hoses improper connection • PCV valve malfunction

Diagnostic procedure

STEP	INSPECTION		ACTION
1	**VERIFY FREEZE FRAME DATA HAS BEEN RECORDED** • Has FREEZE FRAME DATA been recorded?	Yes	Go to next step.
		No	Record FREEZE FRAME DATA on repair order, then go to next step.
2	**VERIFY RELATED SERVICE INFORMATION AVAILABILITY** • Check for related Service Information availability. • Is any related Service Information available?	Yes	Perform repair or diagnosis according to available Service Information. • If vehicle is not repaired, go to next step.
		No	Go to next step.
3	**VERIFY RELATED PENDING CODE OR STORED DTCS** • Turn ignition key to OFF, then ON (Engine OFF). • Verify related pending code or stored DTCs. • Is other DTCs present?	Yes	Go to appropriate DTC troubleshooting procedures.
		No	If drive ability concern is present, go to Step 9. If not, go to next step.
4	**IDENTIFY TRIGGER DTC FOR FREEZE FRAME DATA** • Is DTC P0172 or P0175 on FREEZE FRAME DATA?	Yes	Go to next step.
		No	Go to troubleshooting procedures for DTC on FREEZE FRAME DATA.
5	**VERIFY CURRENT INPUT SIGNAL STATUS (IGNITION KEY TO ON/IDLE)** • Access ECT, MAF, TP and VSS PIDs using WDS or equivalent. • Is there any signal that is far out of specification when ignition key is ON and engine runs?	Yes	Inspect suspected sensor and excessive resistance in related wiring harnesses. Repair or replace if necessary. Then go to Step 11.
		No	Go to next step.
6	**VERIFY CURRENT INPUT SIGNAL STATUS UNDER TROUBLE CONDITION** • Inspect PID data while simulating FREEZE FRAME DATA condition. • Is there any input signal which causes drastic changes?	Yes	Inspect suspected sensor and related wiring harnesses, and repair or replace it. Then go to Step 11.
		No	Go to next step.
7	**VERIFY CURRENT INPUT SIGNAL STATUS OF Front HO2S** • Access O2S11 for P0172 or O2S21 for P0175 PID using WDS or equivalent. • Verify PID while racing engine (in PARK or NEUTRAL). • Is PID reading okay? — **Above 0.45 V** when suddenly depress accelerator pedal (rich condition). — **Below 0.45 V** just after release of accelerator pedal (lean condition)	Yes	Go to next step.
		No	Replace suspected front HO2S. Then go to Step 11.

STEP	INSPECTION		ACTION
8	**INSPECT FUEL LINE PRESSURE** • Turn ignition key to OFF. • Connect fuel gauge on the fuel pipe. • Start engine and run it at idle. • Inspect fuel line pressure. • Is fuel line pressure okay?	Yes	Go to next step.
		No	Inspect fuel pump maximum pressure and Fuel return line for clogged. • If any problem found, repair or replace suspected parts. • If all items above are okay, replace pressure regulator. Then go to Step 11.
9	**INSPECT LONG TERM FUEL TRIM** • Turn ignition key to OFF. • Disconnect purge hose from intake manifold and plug opening end of hose and intake manifold. • Access following PIDs — For P0172: LONGFT1 — For P0175: LONGFT2 • Does it shift to positive value?	Yes	Inspect purge solenoid valve. (See F4–85 PURGE SOLENOID VALVE INSPECTION.) Repair or replace it if necessary, then go to Step 11.
		No	Go to next step.
10	**INSPECT PCV VALVE OPERATION** • Inspect PCV valve operation. (See F4–87 PCV VALVE INSPECTION.) • Is PCV valve okay?	Yes	Go to next step.
		No	Replace PCV valve, then go to next step.
11	**VERIFY TROUBLESHOOTING OF DTC P0172 or P0175 COMPLETED** • Make sure to reconnect all disconnected connectors. • Turn ignition key to ON (Engine OFF). • Clear DTC from memory using WDS or equivalent. • Run PCM adaptive memory procedure drive mode and HO2S heater, HO2S, and TWC repair verification drive mode. (European (L.H.D.) specs.) (See F4–110 OBD DRIVE MODE.) • Run PCM adaptive memory procedure drive mode and HO2S heater, HO2S, and EGR system repair verification drive mode. (Australian, General (L.H.D. R.H.D.) specs.) (See F4–110 OBD DRIVE MODE.) • Stop vehicle and access PID/DATA MONITOR RECORDED to inspect DRIVE MODE completion status. • Verify RFCFLAG changes to OFF for FUEL SYSTEM MONITOR. If not, run DRIVE MODE again. • Access PENDING CODE. • Is PENDING CODE of same DTC present?	Yes	Replace PCM, then go to next step.
		No	Go to next step.
12	**VERIFY AFTER REPAIR PROCEDURE** • Perform “After Repair Procedure”. (See F4–110 AFTER REPAIR PROCEDURE.) • Is there any DTC present?	Yes	Go to applicable DTC inspection. (See F4–113 DTC TABLE.)
		No	Troubleshooting completed.

End Of Ste

F4

DTC P0300

AME427001085W01

European (L.H.D.) Specs.

DTC P0300	Random misfire detection
DETECTION CONDITION	• PCM monitors CKP sensor input signal interval time. PCM calculates the change of the interval time for each cylinder. If the change of interval time exceeds the preprogrammed criteria, PCM detects a misfire in the corresponding cylinder. While the engine is running, PCM counts the number of misfires that occurred at **200 crankshaft revolutions** and **1,000 crankshaft revolutions** and calculates misfire ratio for each crankshaft revolution. If the ratio exceeds the preprogrammed criteria, PCM determines that a misfire, which can damage the catalytic converter or affect emission performance, has occurred. **Diagnostic support note** • This is a continuous monitor (MISFIRE). • MIL illuminates if PCM detects the misfire which affects emission performance in two consecutive drive cycles. • PENDING CODE is available if PCM detects the misfire which affects emission performance during first drive cycle. • MIL flashes if PCM detects the misfire which can damage the catalytic converter during first drive cycle. Therefore, PENDING CODE is not available while MIL flashes. • FREEZE FRAME DATA is available. • DTC is stored in the PCM memory.
POSSIBLE CAUSE	• CKP sensor malfunction • CMP sensor malfunction • Ignition coil malfunction • Mass airflow sensor contamination • Excess air suction in intake air system (between mass air flow sensor and dynamic chamber) • Fuel pump malfunction • Fuel pressure regulator malfunction • Fuel line clogged • Fuel filter clogged • Fuel leakage in fuel line • Purge control solenoid valve malfunction • PCV valve malfunction • EGR valve malfunction • Vacuum hoses damages or improper connection • Related connector and terminal malfunction • Related wiring harness malfunction

Diagnostic procedure

STEP	INSPECTION		ACTION
1	**VERIFY FREEZE FRAME DATA HAS BEEN RECORDED** • Has FREEZE FRAME DATA been recorded?	Yes	Go to next step.
		No	Record FREEZE FRAME DATA on repair order, then go to next step.
2	**VERIFY RELATED SERVICE INFORMATION AVAILABILITY** • Check for related Service Information availability. • Is any related Service Information available?	Yes	Perform repair or diagnosis according to available Service Information. • If vehicle is not repaired, go to next step.
		No	Go to next step.
3	**VERIFY RELATED PENDING CODE OR STORED DTCs** • Turn ignition key to OFF then ON (Engine OFF). • Verify related pending code or stored DTCs. • Is other DTCs present?	Yes	Go to appropriate DTC troubleshooting. (See F4–113 DTC TABLE.)
		No	Go to next step.

STEP	INSPECTION		ACTION
4	**VERIFY CURRENT INPUT SIGNAL STATUS (IGNITION KEY TO ON/IDLE)** • Access ECT, IAT, MAF, RPM, TP, and VSS PIDs using WDS or equivalent. (See F4–91 PCM Inspection Using the SST (WDS or equivalent).) • Is there any signal that is far out of specification when ignition switch is ON and engine runs at idle?	Yes	Inspect suspected circuit and/or part according to inspection results. (See F4–91 PCM Inspection Using the SST (WDS or equivalent).) Then go to Step 21.
		No	Go to next step.
5	**VERIFY CURRENT INPUT SIGNAL STATUS UNDER TROUBLE CONDITION** • Inspect PID while simulating FREEZE FRAME DATA condition. • Is there any signal which causes drastic changes?	Yes	Inspect suspected circuit and/or part according to inspection results. (See F4–91 PCM Inspection Using the SST (WDS or equivalent).) Then go to Step 21.
		No	Go to next step.
6	**INSPECT CMP SENSOR** • Inspect CMP sensor. (See F4–102 CAMSHAFT POSITION (CMP) SENSOR INSPECTION.) • Is CMP sensor okay?	Yes	Go to next step.
		No	Inspect installation condition and damages on timing belt and gears, repair faulty parts. • If it is okay, replace CMP sensor. Then go to Step 21.
7	**VERIFY CKP SENSOR INSTALLATION CONDITION** • Check for CKP sensor looseness. • Is CKP sensor loosen?	Yes	Retighten CKP sensor, then go to Step 21.
		No	Go to next step.
8	**CHECK IGNITION COIL OPERATION** • Perform spark test. (See F4–302 Spark Test) • Do all cylinders show blinking condition?	Yes	Go to step 11.
		No	Go to next step.
9	**INSPECT POWER SUPPLY TERMINAL AT IGNITION COIL CONNECTOR** • Disconnect ignition coil connector. • Turn ignition key to ON (Engine OFF). • Measure voltage between ignition coil terminal D (harness-side) and body ground. • Is there voltage reading **B+**?	Yes	Go to next step.
		No	Check for open circuit between ignition coil connector and ignition switch. Repair or replace wiring harness, then go to Step 21.
10	**INSPECT IGNITION COIL RESISTANCE** • Check ignition coil resistance. (See G–16 IGNITION COIL INSPECTION.) • Is coil resistance okay?	Yes	Go to step 21.
		No	Replace ignition coil, then go to Step 21.
11	**INSPECT MAF PID** • Start engine. • Access MAF PID using WDS or equivalent. • Verify that MAF PID changes quickly according to race engine RPM. • Is MAF PID response okay?	Yes	Go to next step.
		No	Replace mass airflow sensor, then go to Step 21.
12	**INSPECT EXCESSIVE AIR SUCTION IN INTAKE AIR SYSTEM** • Inspect for air leakage at following: — Between mass air flow sensor and throttle body — Between throttle body and dynamic chamber • Is there any malfunction?	Yes	Repair or replace suspected part, then go to Step 21.
		No	Go to next step.

STEP	INSPECTION		ACTION
13	**INSPECT FUEL LINE PRESSURE** • Inspect fuel line pressure. (See F4–66 FUEL LINE PRESSURE INSPECTION.) • Is fuel line pressure okay?	Yes	Go to step 17.
		No	If fuel line pressure is too low, go to next step. If fuel line pressure is excess high, check as follows: • Fuel pump maximum pressure (See F4–74 FUEL PUMP UNIT INSPECTION.) • Fuel return line for clogged — If all above are okay, replace pressure regulator. Then go to Step 21.
14	**INSPECT FUEL PUMP MAXIMUM PRESSURE** • Inspect fuel pump maximum pressure. (See F4–74 FUEL PUMP UNIT INSPECTION.) • Is fuel pump maximum pressure okay?	Yes	Go to next step.
		No	Inspect fuel pump circuit for open or poor connection. Repair or replace suspected circuit, then go to Step 21. • If okay, replace fuel pump, then go to Step 21.
15	**INSPECT FUEL LINE FROM FUEL PUMP TO FUEL DELIVERY PIPE** • Visually inspect for fuel leakage in fuel line for any leakage. • Is any fuel leakage found?	Yes	Replace suspected fuel line, then go to Step 21.
		No	Inspect fuel filters for following: • Restriction or clogging at fuel filter (high-pressure side). • Foreign materials or stain inside fuel filter (low-pressure side) Perform following actions as result. • If restriction or clogging is found at fuel filter (high-pressure side), replace fuel filter. • If foreign materials or stain is found inside fuel filter (low-pressure side), clean of fuel tank and filter. • If all items above are okay, replace pressure regulator. Then, go to Step 21.
16	**INSPECT ENGINE COMPRESSION** • Inspect engine compression. • Is it okay?	Yes	Go to next step.
		No	Implement engine overhaul for repairs, then go to Step 21.
17	**INSPECT OPERATION OF PURGE CONTROL SOLENOID VALVE** • Perform purge solenoid valve inspection. (See F4–85 PURGE SOLENOID VALVE INSPECTION) • Is purge control solenoid valve okay?	Yes	Go to next step.
		No	Replace purge control solenoid valve, then go to Step 21.
18	**INSPECT PCV VALVE OPERATION** • Turn ignition key to OFF. • Remove PCV valve and check valve operation. (See F4–87 PCV VALVE INSPECTION.) • Is PCV valve operation okay?	Yes	Replace PCV valve, then go to Step 21.
		No	Go to next step.

STEP	INSPECTION		ACTION
19	**INSPECT OPERATION OF EGR VALVE** • Remove EGR valve. • Visually check for stuck to open. • Does EGR valve stuck to open?	Yes	Go to next step.
		No	Repair or replace EGR valve, then go to Step 21.
20	**INSPECT SEALING OF ENGINE COOLANT PASSAGE** **Warning** • **Removing radiator cap when radiator is hot is dangerous. Scalding coolant and steam may shoot out and cause serious injury.** • **When removing radiator cap, wrap thick cloth around and turn it slowly.** • Remove radiator cap. • Implement procedure to bleed air from engine coolant, then run engine at idle. • Is there any small bubble which makes engine coolant white at filling opening? **Note** • Large bubbles are normal since they are remaining air coming out from engine coolant passage.	Yes	Air gets in from poor sealing on head gasket or other areas between combustion chamber and engine coolant passage. Repair or replace faulty parts, then go to next step.
		No	Go to next step.
22	**VERIFY TROUBLESHOOTING OF MISFIRE DTC COMPLETED** • Make sure to reconnect all disconnected connectors. • Turn ignition key to ON (Engine OFF). • Clear DTC from memory using WDS or equivalent. • Run PCM adaptive memory procedure drive mode. (See F4–110 OBD DRIVE MODE.) • Is PENDING CODE of same DTC present?	Yes	Replace PCM, then go to next step.
		No	Go to next step.
23	**VERIFY AFTER REPAIR PROCEDURE** • Perform “After Repair Procedure”. (See F4–110 AFTER REPAIR PROCEDURE.) • Is there any DTC present?	Yes	Go to applicable DTC inspection. (See F4–113 DTC TABLE.)
		No	Troubleshooting completed.

End Of Sta

DTC P0301, P0302, P0303, P0304, P0305, P0306

AME427001085W02

European (L.H.D.) Specs.

DTC P0301 **DTC P0302** **DTC P0303** **DTC P0304** **DTC P0305** **DTC P0306**	**Cylinder No.1 misfire detection** **Cylinder No.4 misfire detection** **Cylinder No.2 misfire detection** **Cylinder No.5 misfire detection** **Cylinder No.3 misfire detection** **Cylinder No.6 misfire detection**
DETECTION CONDITION	• PCM monitors crankshaft position sensor input signal interval time. PCM calculates the change of the interval time for each cylinder. If the change of interval time exceeds the preprogrammed criteria, PCM detects a misfire in the corresponding cylinder. While the engine is running, PCM counts the number of misfires that occurred at **200 crankshaft revolutions** and **1,000 crankshaft revolutions** and calculates misfire ratio for each crankshaft revolution. If the ratio exceeds the preprogrammed criteria, PCM determines that a misfire, which can damage the catalytic converter or affect emission performance, has occurred. **Diagnostic support note** • This is a continuous monitor (MISFIRE). • MIL illuminates if PCM detects the misfire which affects emission performance in two consecutive drive cycles. • PENDING CODE is available if PCM detects the misfire which affects emission performance during first drive cycle. • MIL flashes if PCM detects the misfire which can damage the catalytic converter during first drive cycle. Therefore, PENDING CODE is not available while MIL flashes. • FREEZE FRAME DATA is available. • DTC is stored in the PCM memory.
POSSIBLE CAUSE	• Spark plug malfunction • Fuel injector malfunction • Air suction in intake air system (between dynamic chamber and cylinder head) • Inadequate engine compression due to engine internal malfunction • Related connector or terminal malfunction • Related wiring harness malfunction

Diagnostic procedure

STEP	INSPECTION		ACTION
1	**VERIFY FREEZE FRAME DATA HAS BEEN RECORDED** • Has FREEZE FRAME DATA been recorded?	Yes	Go to next step.
		No	Record FREEZE FRAME DATA on repair order, then go to next step.
2	**VERIFY RELATED SERVICE INFORMATION AVAILABILITY** • Check for related Service Information availability. • Is any related Service Information available?	Yes	Perform repair or diagnosis according to available Service Information. • If vehicle is not repaired, go to next step.
		No	Go to next step.
3	**VERIFY RELATED PENDING CODE OR STORED DTCS** • Turn ignition key to OFF then ON (Engine OFF). • Verify related pending code or stored DTCs. • Is other DTCs present?	Yes	Go to appropriate DTC troubleshooting. (See F4–113 DTC TABLE.)
		No	Go to next step.
4	**VERIFY CURRENT INPUT SIGNAL STATUS (IGNITION KEY TO ON /IDLE)** • Access ECT, IAT, MAF, RPM, TP and VSS PIDs using WDS or equivalent. (See F4–91 PCM Inspection Using the SST (WDS or equivalent).) • Is there any signal that is far out of specification when ignition switch is ON and engine runs at idle?	Yes	Inspect suspected circuit and/or part according to inspection results. Then go to Step 12. (See F4–91 PCM Inspection Using the SST (WDS or equivalent).)
		No	Go to next step.
5	**VERIFY CURRENT INPUT SIGNAL STATUS UNDER TROUBLE CONDITION** • Inspect PID while simulating FREEZE FRAME DATA condition. • Is there any signal which causes drastic changes?	Yes	Inspect suspected circuit and/or part according to inspection results. Then go to Step 12. (See F4–91 PCM Inspection Using the SST (WDS or equivalent).)
		No	Go to next step.

STEP	INSPECTION		ACTION
6	**INSPECT SPARK PLUG CONDITION** • Turn ignition key to OFF. • Remove spark plug from suspected cylinder. • Check spark plug condition: — Cracks — Excess wear — Gap — Wet • Is any problem found on spark plug?	Yes	• If spark plug is wet, fuel flooding is suspected. Go to step 8. • If spark plug has a cracks, excess wear or improper gap, replace faulty spark plug. Then go to Step 12.
		No	Go to next step.
7	**INSPECT FUEL INJECTOR HARNESS** • Remove intake air system parts. • Disconnect fuel injector connector on suspected cylinder. • Connect NOID LIGHT to fuel injector connector terminals. • Check dim of light during cranking?	Yes	Go to next step.
		No	Check for fuel injector harnesses. Repair or replace it if necessary, then go to Step 12.
8	**INSPECT FUEL INJECTOR OPERATION** • Remove fuel injector from suspected cylinder. • Swap injector with injector on other cylinder. • Start engine and run it at idle. • Is misfire DTC for cylinder which has a suspected fuel injector?	Yes	Replace injector, then go to step 12.
		No	Go to next step.
9	**INSPECT FOR AIR SUCTION AT INTAKE AIR SYSTEM** • Inspect for air leakage at following: — Around connection of dynamic chamber and intake manifold — Around connection of intake manifold and cylinder head • Is air leakage found?	Yes	Repair or replace suspected part, then go to Step 12.
		No	Go to next step.
10	**INSPECT SEALING OF ENGINE COOLANT PASSAGE** **Warning** • **Removing radiator cap when radiator is hot is dangerous, Scalding coolant and steam may shoot out and cause serious injury.** • **When removing radiator cap, wrap thick cloth around and turn it slowly.** • Remove radiator cap. • Implement procedure to bleed air from engine coolant, then run engine at idle. • Is there any small bubble which makes engine coolant white at filling opening? **Note** • Large bubbles are normal since they are remaining air coming out from engine coolant passage.	Yes	Air gets in from poor sealing on head gasket or other areas between combustion chamber and engine coolant passage. Repair or replace faulty parts, then go to Step 12.
		No	Go to next step.
11	**INSPECT ENGINE COMPRESSION** • Inspect engine compression. • Is engine compression okay?	Yes	Go to next step.
		No	Overhaul the engine, then go to next step.
12	**VERIFY TROUBLESHOOTING OF MISFIRE DTC COMPLETED** • Make sure to reconnect all disconnected connectors. • Start engine. • Clear DTC from PCM memory using WDS or equivalent. • Run PCM adaptive memory procedure drive mode. (See F4–110 OBD DRIVE MODE.) • Is same PENDING CODE or stored code of same DTC present?	Yes	Replace PCM, then go to next step.
		No	Go to next step.
13	**VERIFY AFTER REPAIR PROCEDURE** • Perform “After Repair Procedure”. (See F4–110 AFTER REPAIR PROCEDURE.) • Is there any DTC present?	Yes	Go to applicable DTC inspection. (See F4–113 DTC TABLE.)
		No	Troubleshooting completed.

DTC P0327

AME427001085W03

DTC P0327	Knock sensor circuit low input
DETECTION CONDITION	• PCM monitors input signal from knock sensor when engine is running. If input voltage at PCM terminal 57 is excessively low, PCM determines that knock sensor circuit is malfunctioning. **Diagnostic support note** • This is a continuous monitor (CCM). • MIL illuminates if PCM detects the above malfunction condition during first drive cycle. • PENDING CODE is not available. • FREEZE FRAME DATA is available. • DTC is stored in the PCM memory.
POSSIBLE CAUSE	• Knock sensor malfunction • Connector or terminal malfunction • Open or short to ground circuit between knock sensor connector terminal A and PCM terminal 57 • Open or short to ground circuit between knock sensor connector terminal B and PCM terminal 4 • Short knock sensor two wires

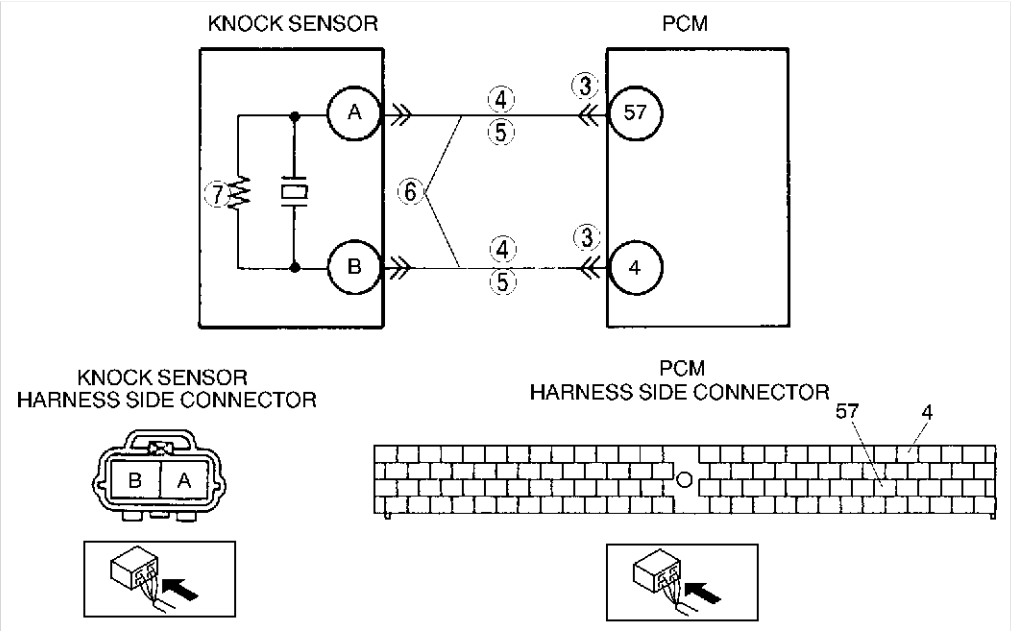

Diagnostic procedure

STEP	INSPECTION		ACTION
1	**VERIFY FREEZE FRAME DATA HAS BEEN RECORDED** • Has FREEZE FRAME DATA been recorded?	Yes	Go to next step.
		No	Record FREEZE FRAME DATA on repair order, then go to next step.
2	**VERIFY RELATED SERVICE INFORMATION AVAILABILITY** • Check for related Service Information availability. • Is any related Service Information available?	Yes	Perform repair or diagnosis according to available Service Information. • If vehicle is not repaired, go to next step.
		No	Go to next step.

STEP	INSPECTION		ACTION
3	**INSPECT PCM CONNECTOR TERMINAL** • Turn ignition key to OFF. • Disconnect PCM connector. • Check for poor connection at terminals 57 and 4 (damaged, pulled-out pins, corrosion, etc.). • Is there any malfunction?	Yes	Repair terminal, then go to Step 8.
		No	Go to next step.
4	**INSPECT KNOCK SENSOR CIRCUITS FOR OPEN CIRCUIT** • Disconnect knock sensor connector. • Check continuity between the following circuits: — Knock sensor female terminal A (harness-side) and PCM terminal 57 (harness-side) — Knock sensor female terminal B (harness-side) and PCM terminal 4 (harness-side) • Are there continuities?	Yes	Go to next step.
		No	Repair or replace suspected wiring harness, then go to Step 8.
5	**INSPECT KNOCK SENSOR CIRCUITS FOR SHORT TO GROUND** • Check continuity between following circuits: — Knock sensor female terminal A (harness-side) and body ground — Knock sensor female terminal B (harness-side) and body ground • Are there continuities?	Yes	Repair or replace suspected wiring harness, then go to Step 8.
		No	Go to next step.
6	**CHECK FOR SHORT CIRCUITS** • Check continuity between knock sensor female terminals A and B (harness-side). • Is there continuity?	Yes	Repair or replace suspected harness, then go to Step 8.
		No	Go to next step.
7	**INSPECT KNOCK SENSOR** • Perform knock sensor inspection. (See F4–103 KNOCK SENSOR INSPECTION) • Is knock sensor okay?	Yes	Go to next step.
		No	Replace knock sensor, then go to next step.
8	**VERIFY TROUBLESHOOTING OF DTC P0327 COMPLETED** • Make sure to reconnect all disconnected connectors. • Turn ignition key to ON (Engine OFF). • Clear DTC from memory using WDS or equivalent. • Start engine. • Is same DTC present?	Yes	Replace or reprogram PCM. Then go to next step.
		No	Go to next step.
9	**VERIFY AFTER REPAIR PROCEDURE** • Perform “After Repair Procedure”. (See F4–110 AFTER REPAIR PROCEDURE.) • Is there any DTC present?	Yes	Go to applicable DTC inspection. (See F4–113 DTC TABLE.)
		No	Troubleshooting completed.

End Of Ste

F4

DTC P0328

AME427001085W04

DTC P0328	Knock sensor circuit high input
DETECTION CONDITION	• PCM monitors input signal from knock sensor when engine is running. If input voltage at PCM terminal 57 is excessively high, PCM determines that knock sensor circuit is malfunctioning. **Diagnostic support note** • This is a continuous monitor (CCM). • MIL illuminates if PCM detects the above malfunction conditions during first drive cycle. • PENDING CODE is not available. • FREEZE FRAME DATA is available. • DTC is stored in PCM memory.
POSSIBLE CAUSE	• Knock sensor malfunction • Connector or terminal malfunction • Open circuit in wiring between knock sensor terminal A and PCM terminal 57

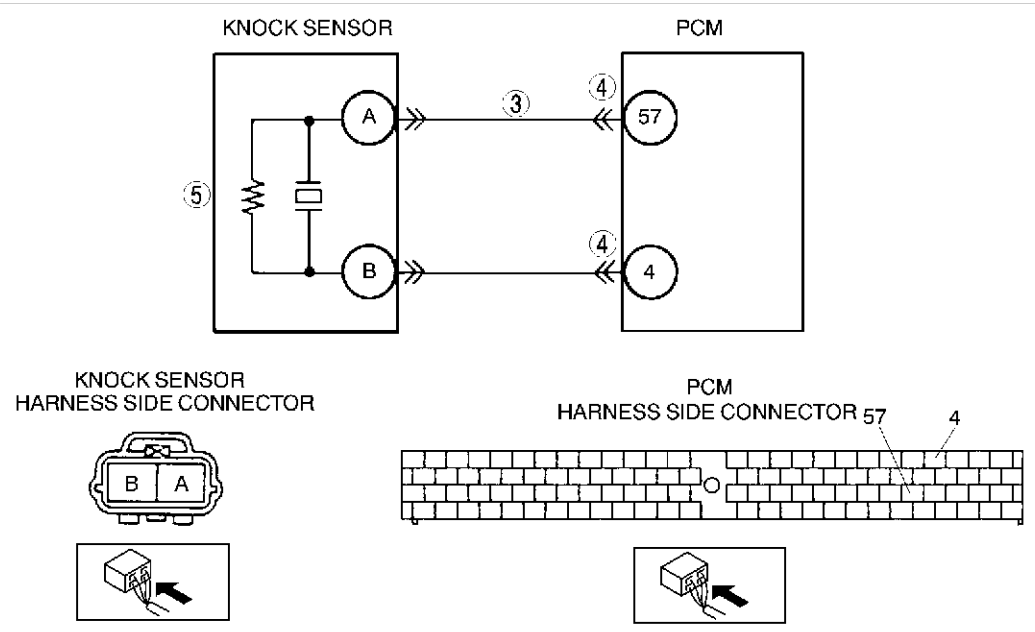

Diagnostic procedure

STEP	INSPECTION		ACTION
1	**VERIFY FREEZE FRAME DATA HAS BEEN RECORDED** • Has FREEZE FRAME DATA been recorded?	Yes	Go to next step.
		No	Record FREEZE FRAME DATA on repair order, then go to next step.

STEP	INSPECTION		ACTION
2	**VERIFY RELATED SERVICE INFORMATION AVAILABILITY** • Check for related Service Information availability. • Is any related Service Information available?	Yes	Perform repair or diagnosis according to available Service Information. • If vehicle is not repaired, go to next step.
		No	Go to next step.
3	**CHECK KNOCK SIGNAL CIRCUIT FOR OPEN CIRCUIT** • Turn ignition key to OFF. • Disconnect knock connector. • Turn ignition key ON (Engine OFF). • Measure voltage between KS terminal A (harness-side) and body GND.? • Is voltage **approx. 5 V**?	Yes	Go to Step 5.
		No	Go to next step.
4	**CHECK PCM CONNECTOR** • Disconnect PCM connector. • Check for poor connection (damaged, pulled-out terminals, corrosion, etc.). • Is there any malfunction?	Yes	Repair or replace terminal, then go to Step 6.
		No	Repair or replace harness for open, then go to Step 6.
5	**INSPECT KNOCK SENSOR** • Perform knock sensor inspection. (See F4–103 KNOCK SENSOR INSPECTION) • Is knock sensor okay?	Yes	Go to next step.
		No	Replace knock sensor, then go to next step.
6	**VERIFY TROUBLESHOOTING OF DTC P0328 COMPLETED** • Make sure to connect all disconnected connectors. • Clear DTC from PCM memory using WDS or equivalent. • Start engine. • Is same DTC present?	Yes	Replace PCM, then go to next step.
		No	Go to next step.
7	**VERIFY AFTER REPAIR PROCEDURE** • Perform “After Repair Procedure”. (See F4–110 AFTER REPAIR PROCEDURE.) • Is any DTC present?	Yes	Go to applicable DTC inspection. (See F4–113 DTC TABLE)
		No	Troubleshooting completed.

End Of Ste

DTC P0335

AME427001085W05

DTC P0335	CKP sensor circuit malfunction
DETECTION CONDITION	• If PCM does not receive input voltage from CKP sensor for **4.2 s** while MAF is **2.7 g/s {0.36 lb/min.} or above**, PCM determines that CKP sensor circuit has a malfunction. **Diagnostic support note** • This is a continuous monitor (CCM). • MIL illuminates if PCM detects the above malfunction conditions during first drive cycle. • PENDING CODE is not available. • FREEZE FRAME DATA is available. • DTC is stored in the PCM memory.
POSSIBLE CAUSE	• CKP sensor malfunction • Connector or terminal malfunction • CKP sensor is dirty. • Short to ground between CKP sensor terminal A to PCM terminal 21 • Short to ground between CKP sensor terminal B to PCM terminal 22 • Open circuit between CKP sensor terminal A to PCM terminal 21 • Open circuit between CKP sensor terminal B to PCM terminal 22 • CKP sensor pulse wheel malfunction

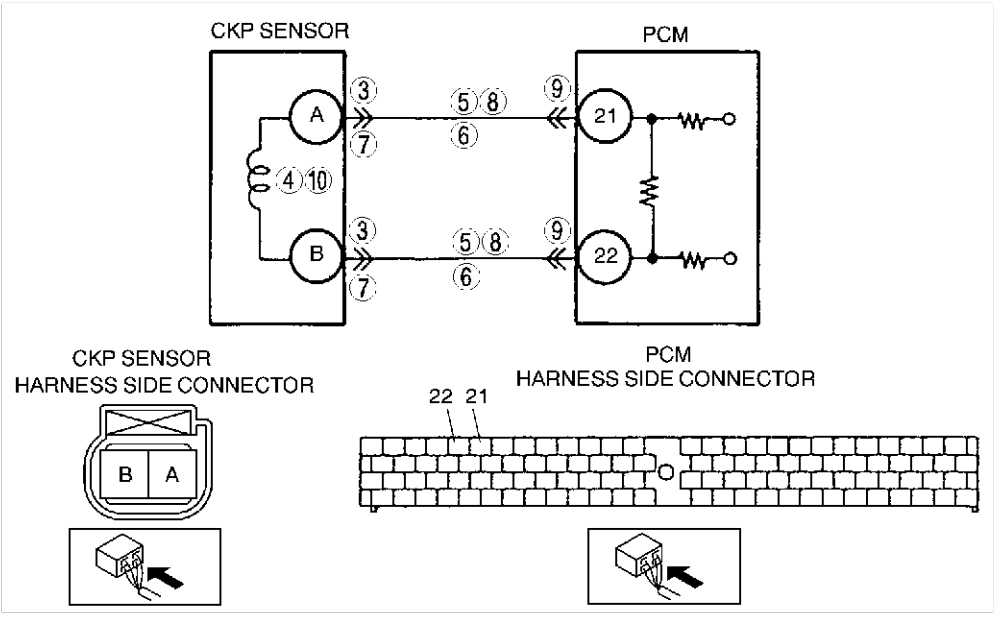

Diagnostic procedure

STEP	INSPECTION		ACTION
1	**VERIFY FREEZE FRAME DATA HAS BEEN RECORDED** • Has FREEZE FRAME DATA been recorded?	Yes	Go to next step.
		No	Record FREEZE FRAME DATA on repair order, then go to next step.
2	**VERIFY RELATED SERVICE INFORMATION AVAILABILITY** • Check for related Service Information availability. • Is any related Service Information available?	Yes	Perform repair or diagnosis according to available Service Information. • If vehicle is not repaired, go to next step.
		No	Go to next step.
3	**VERIFY CKP SENSOR VOLTAGE** • Disconnect CKP sensor connector. • Connect voltmeter between CKP sensor connector terminals A and B (sensor-side). • Check the voltage in AC range while cranking the engine. • Is any voltage reading?	Yes	Go to next step.
		No	Go to step 10.
4	**INSPECT CKP SENSOR** • Turn ignition key to OFF. • Perform CKP sensor inspection. (See F4–101 CRANKSHAFT POSITION (CKP) SENSOR INSPECTION) • Is CKP sensor okay?	Yes	Check CKP sensor pulse wheel for damage. Replace CKP sensor pulse wheel and go to Step 11.
		No	If tester reads **0 ohm**, then go to next step. If tester reads infinity, then go to Step 7.

STEP	INSPECTION		ACTION
5	**INSPECT CKP CIRCUIT FOR SHORT TO GROUND** • Disconnect CKP sensor connector. • Check continuity between following terminal and body ground: — CKP sensor connector terminal A (harness-side) — CKP sensor connector terminal B (harness-side) • Is there any continuity?	Yes	Repair or replace suspected harness, then go to Step 11.
		No	Go to next step.
6	**INSPECT CKP CIRCUITS FOR SHORTS** • Check continuity between CKP sensor connector terminals A and B (harness-side). • Is there any continuity?	Yes	Repair or replace suspected harness, then go to Step 11.
		No	Go to step 9.
7	**INSPECT CKP SENSOR CONNECTOR FOR POOR CONNECTION** • Verify that the CKP sensor connector is connected securely. • Is connector okay?	Yes	Go to next step.
		No	Reconnect the connector, then go to Step 11.
8	**INSPECT CKP CIRCUIT FOR OPEN CIRCUIT** • Disconnect CKP sensor connector. • Disconnect PCM connector. • Check continuity between following circuits: — CKP sensor terminal A (harness-side) and PCM terminal 21 — CKP sensor terminal B (harness-side) and PCM terminal 22 • Is there continuity?	Yes	Go to next step.
		No	Repair or replace suspected harness, then go to Step 11.
9	**INSPECT PCM CONNECTOR FOR POOR CONNECTION** • Turn ignition key to OFF. • Disconnect PCM connector. • Check for poor connection (damaged, pulled-out terminals, corrosion, etc.). • Is there any malfunction?	Yes	Repair terminal, then go to Step 14.
		No	Go to next step.
10	**INSPECT CKP SENSOR** • Perform CKP sensor inspection. (See F4–101 CRANKSHAFT POSITION (CKP) SENSOR INSPECTION) • Is CKP sensor okay?	Yes	Check for poor connection (damaged, pulled-out terminals, corrosion, etc.) or bent terminal of CKP sensor connector. • Repair if necessary, then go to Step 14.
		No	Replace CKP sensor, then go to Step 14.
11	**VERIFY TROUBLESHOOTING OF DTC P0335 COMPLETED** • Make sure to reconnect all disconnected connectors. • Turn ignition key to ON (Engine OFF). • Clear DTC from PCM memory using WDS or equivalent. • Start engine. • Access MAF PID using WDS or equivalent. **Note** • MAF PID should indicate **above 2.7 g/s {0.36 lb/min.}** during this test • Is same DTC present?	Yes	Replace PCM, then go to next step.
		No	Go to next step.
12	**VERIFY AFTER REPAIR PROCEDURE** • Perform “After Repair Procedure”. (See F4–110 AFTER REPAIR PROCEDURE.) • Is there any DTC present?	Yes	Go to applicable DTC inspection. (See F4–113 DTC TABLE.)
		No	Troubleshooting completed.

End Of Ste

DTC P0340

AME427001085W06

DTC P0340	Camshaft position (CMP) sensor circuit malfunction
DETECTION CONDITION	• PCM monitors input voltage from CMP sensor when engine running. If PCM does not receive input voltage from CMP sensor while PCM receives input signal from CKP sensor, PCM determines that CMP circuit has malfunction. **Diagnostic support note** • This is a continuous monitor (CCM). • MIL illuminates if PCM detects the above malfunction condition during first drive cycle. • PENDING CODE is not available. • FREEZE FRAME DATA is available. • DTC is stored in the PCM memory.
POSSIBLE CAUSE	• CMP sensor malfunction • Connector or terminal malfunction • CMP sensor is dirty • Short to ground circuit between CMP sensor terminal A and PCM terminal 85 • Short to ground circuit between CMP sensor terminal B and PCM terminal 86 • Open circuit between CMP sensor terminal A and PCM terminal 85 • Open circuit between CMP sensor terminal B and PCM terminal 86 • CKP sensor malfunction

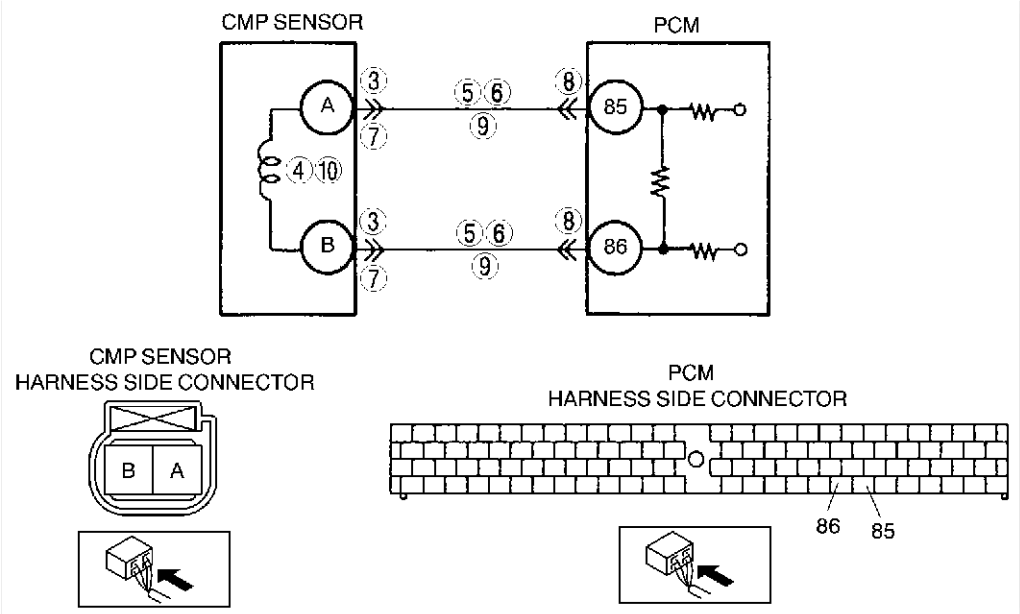

Diagnostic procedure

STEP	INSPECTION		ACTION
1	**VERIFY FREEZE FRAME DATA HAS BEEN RECORDED** • Has FREEZE FRAME DATA been recorded?	Yes	Go to next step.
		No	Record FREEZE FRAME DATA on repair order, then go to next step.
2	**VERIFY RELATED SERVICE INFORMATION AVAILABILITY** • Check for related Service Information availability. • Is any related Service Information available?	Yes	Perform repair or diagnosis according to available Service Information. • If vehicle is not repaired, go to next step.
		No	Go to next step.
3	**VERIFY CMP SENSOR VOLTAGE** • Disconnect CMP sensor connector. • Connect voltmeter between CMP sensor connector terminals A and B (sensor-side). • Check the voltage in AC range while cranking the engine. • Is there any voltage reading?	Yes	Go to step 5.
		No	Go to next step.
4	**INSPECT CMP SENSOR** • Turn ignition key to OFF. • Perform CMP sensor inspection. (See F4–102 CAMSHAFT POSITION (CMP) SENSOR INSPECTION) • Is CMP sensor okay?	Yes	Check camshaft pulley for damage. Replace pulley and go to Step 11.
		No	Replace CMP sensor, then go to Step 11.

STEP	INSPECTION		ACTION
5	**CHECK CMP CIRCUIT FOR SHORT TO GROUND** • Disconnect CMP sensor connector. • Check continuity between following terminal and body ground: — CMP sensor connector terminal A (harness-side) — CMP sensor connector terminal B (harness-side) • Is there any continuity?	Yes	Repair or replace suspected harness, then go to Step 11.
		No	Go to next step.
6	**INSPECT CMP CIRCUITS FOR SHORTS** • Check continuity between CMP sensor connector terminals A and B (harness-side). • Is there any continuity?	Yes	Repair or replace suspected harness, then go to Step 11.
		No	Go to step 9.
7	**INSPECT CMP SENSOR CONNECTOR FOR POOR CONNECTION** • Verify that the CMP sensor connector is connected securely. • Is connector okay?	Yes	Go to next step.
		No	Reconnect the connector, then go to Step 11.
8	**INSPECT PCM CONNECTOR FOR POOR CONNECTION** • Turn ignition key to OFF. • Disconnect PCM connector. • Check for poor connection (damaged, pulled-out terminals, corrosion, etc.). • Is there any malfunction?	Yes	Repair terminal, then go to Step 11.
		No	Go to next step.
9	**INSPECT CMP CIRCUIT FOR OPEN CIRCUIT** • Disconnect CMP sensor connector. • Disconnect PCM connector. • Check continuity between following circuits: — CMP sensor terminal A (harness-side) and PCM terminal 85 — CMP sensor terminal B (harness-side) and PCM terminal 86 • Is there any continuity?	Yes	Go to next step.
		No	Repair or replace suspected harness, then go to Step 11.
10	**INSPECT CMP SENSOR** • Turn ignition key to OFF. • Perform CMP sensor inspection. (See F4–102 CAMSHAFT POSITION (CMP) SENSOR INSPECTION) • Is CMP sensor okay?	Yes	Check for poor connection (damaged, pulled-out terminals, corrosion, etc.) or bent terminal of CMP sensor connector. • Repair if necessary, then go to next step.
		No	Replace CMP sensor and then go to next step.
11	**VERIFY TROUBLESHOOTING OF DTC P0340 COMPLETED** • Make sure to reconnect all disconnected connectors. • Turn ignition key ON (Engine OFF). • Clear DTC from memory using WDS or equivalent. • Start engine. • Access MAF PID using WDS or equivalent. **Note** • MAF PID should indicate **above 2.70 g/s {0.356 lb./min.}** during this test. • Is pending code of same DTC present?	Yes	Replace PCM, then go to next step.
		No	Go to next step.
12	**VERIFY AFTER REPAIR PROCEDURE** • Perform “After Repair Procedure”. (See F4–110 AFTER REPAIR PROCEDURE.) • Is there any DTC present?	Yes	Go to applicable DTC inspection. (See F4–113 DTC TABLE.)
		No	Troubleshooting completed.

End Of Ste

DTC P0351

AME427001085W07

Australian, General (R.H.D. L.H.D.) Specs.

DTC P0351	Ignition coil No.1 circuit malfunction
DETECTION CONDITION	• PCM monitors output voltage to ignition coil No.1 when engine is running. If the voltage is incorrect, PCM determines that ignition coil circuit has a malfunction. **Diagnostic support note** • This is a continuous monitor (CCM). • MIL illuminates if PCM detects the above malfunction condition in two consecutive drive cycles. • PENDING CODE is available if PCM detects the above malfunction condition during first drive cycle. • FREEZE FRAME DATA is available. • DTC is stored in the PCM memory.
POSSIBLE CAUSE	• Connector or terminal malfunction • Open circuit between PCM terminal 26 and ignition coil No.1 terminal A • Short to power circuit between PCM terminal 26 and ignition coil No.1 terminal A • Short to ground circuit between PCM terminal 26 and ignition coil No.1 terminal A • Open circuit between ignition switch and ignition coil No.1 terminal B • Ignition coil No.1 malfunction

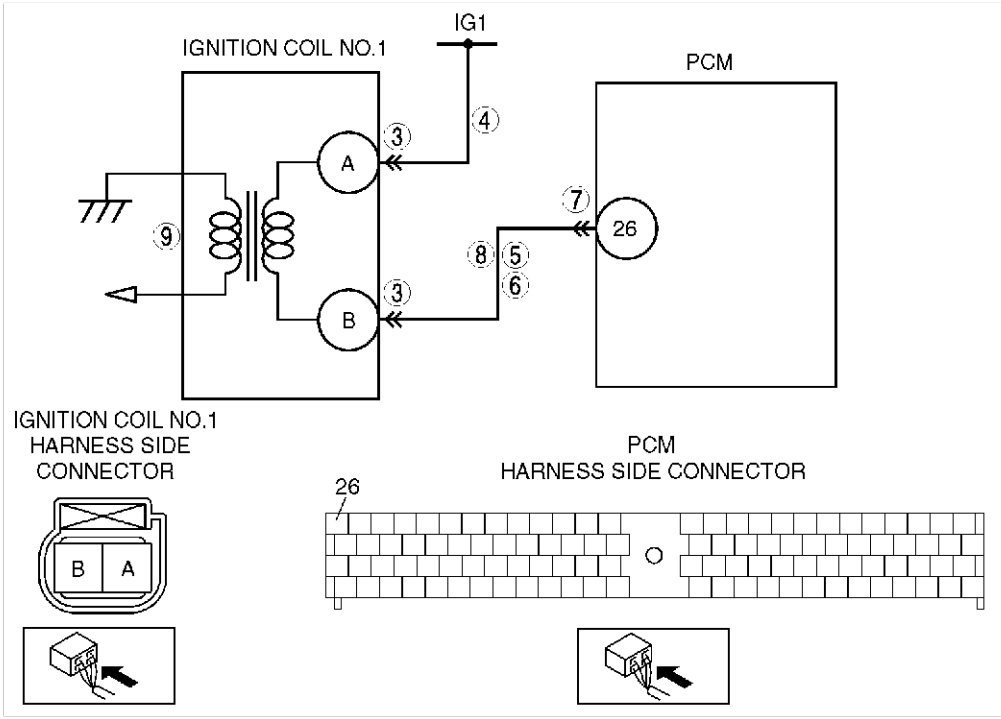

Diagnostic procedure

STEP	INSPECTION		ACTION
1	**VERIFY FREEZE FRAME DATA HAS BEEN RECORDED** • Has FREEZE FRAME DATA been recorded?	Yes	Go to next step.
		No	Record FREEZE FRAME DATA on repair order, then go to next step.
2	**VERIFY RELATED SERVICE INFORMATION AVAILABILITY** • Check for related Service Information availability. • Is any related Service Information available?	Yes	Perform repair or diagnosis according to available Service Information. • If vehicle is not repaired, go to next step.
		No	Go to next step.

STEP	INSPECTION		ACTION
3	**INSPECT IGNITION COIL CONNECTOR** • Turn ignition key to OFF. • Disconnect ignition coil connector. • Check for poor connection (damaged, pulled-out terminals, corrosion, etc.). • Is there any malfunction?	Yes	Repair or replace terminals, then go to Step 10.
		No	Go to next step.
4	**INSPECT IGNITION COIL POWER SUPPLY CIRCUIT FOR OPEN CIRCUIT** • Disconnect ignition coil connector. • Turn ignition key to ON (Engine OFF). • Measure voltage between ignition coil terminal A (harness-side) and body ground. • Is voltage **B+**?	Yes	Go to next step.
		No	Repair or replace wiring harness for open, then go to Step 10.
5	**INSPECT IGNITION COIL SIGNAL CIRCUIT FOR SHORT TO POWER** • Measure voltage between ignition coil terminal B (harness-side) and body ground. • Is voltage **B+**?	Yes	Repair or replace wiring harness for short to power, then go to Step 10.
		No	Go to next step.
6	**INSPECT IGNITION COIL SIGNAL CIRCUIT FOR SHORT TO GROUND** • Check continuity between ignition coil terminal B (harness-side) and body ground. • Is there continuity?	Yes	Repair or replace wiring harness for short to ground, then go to Step 10.
		No	Go to next step.
7	**INSPECT PCM CONNECTOR** • Turn ignition key to OFF. • Disconnect PCM connector. • Check for poor connection (damaged, pulled-out terminals, corrosion, etc.). • Is there any malfunction?	Yes	Repair or replace terminals, then go to Step 10.
		No	Go to next step.
8	**INSPECT IGNITION COIL SIGNAL CIRCUIT FOR OPEN CIRCUIT** • Check continuity between PCM terminal 26 (harness-side) and ignition coil terminal B (harness-side). • Is there continuity?	Yes	Go to next step.
		No	Repair or replace wiring harness for open, then go to Step 10.
9	**INSPECT IGNITION COIL** • Inspect ignition coil. (See G–16 IGNITION COIL INSPECTION.) • Is ignition coil okay?	Yes	Go to next step.
		No	Replace ignition coil, then go to next step.
10	**VERIFY TROUBLESHOOTING OF DTC P0351 COMPLETED** • Make sure to reconnect all disconnected connectors. • Turn ignition key to ON (Engine OFF). • Clear DTC from memory using WDS or equivalent. • Start the engine. • Is PENDING CODE of same DTC present?	Yes	Replace PCM, then go to next step.
		No	Go to next step.
11	**VERIFY AFTER REPAIR PROCEDURE** • Perform “After Repair Procedure”. (See F4–110 AFTER REPAIR PROCEDURE.) • Is there any DTC present?	Yes	Go to applicable DTC inspection. (See F4–113 DTC TABLE.)
		No	Troubleshooting completed.

End Of Sie

DTC P0352

AME427001085W08

Australian, General (R.H.D. L.H.D.) Specs.

DTC P0352	Ignition coil No.4 circuit malfunction
DETECTION CONDITION	• PCM monitors output voltage to ignition coil No.4 when engine is running. If the voltage is incorrect, PCM determines that ignition coil circuit has a malfunction. **Diagnostic support note** • This is a continuous monitor (CCM). • MIL illuminates if PCM detects the above malfunction condition in two consecutive drive cycles. • PENDING CODE is available if PCM detects the above malfunction condition during first drive cycle. • FREEZE FRAME DATA is available. • DTC is stored in the PCM memory.
POSSIBLE CAUSE	• Connector or terminal malfunction • Open circuit between PCM terminal 1 and ignition coil No.4 terminal A • Short to power circuit between PCM terminal 1 and ignition coil No.4 terminal A • Short to ground circuit between PCM terminal 1 and ignition coil No.4 terminal A • Open circuit between ignition switch and ignition coil No.4 terminal B • Ignition coil No.4 malfunction

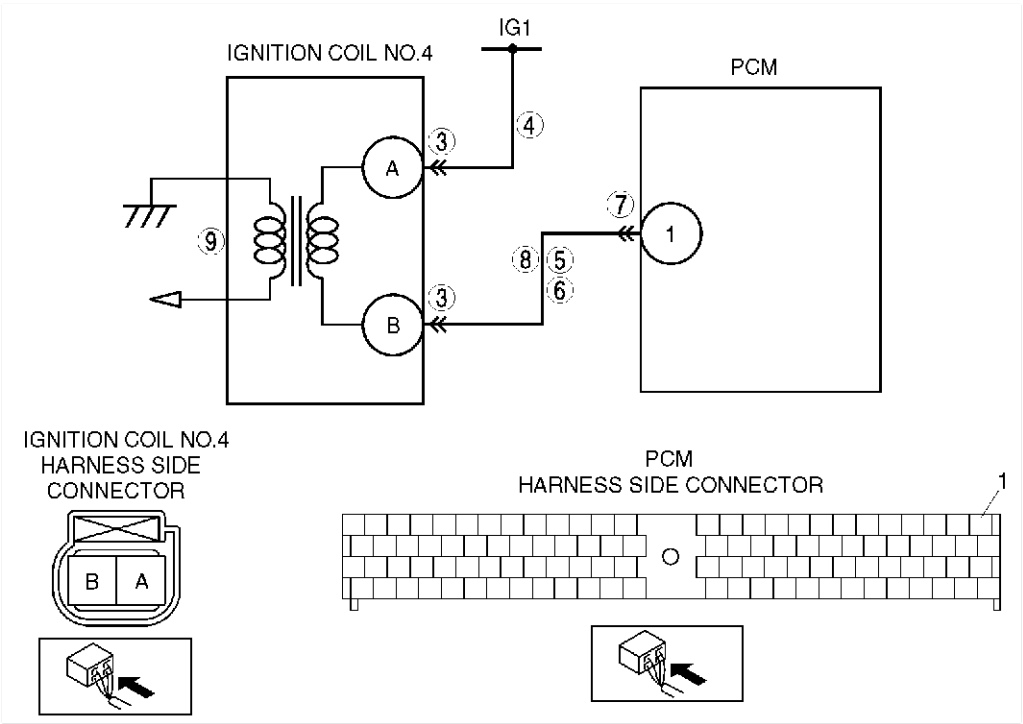

Diagnostic procedure

STEP	INSPECTION		ACTION
1	**VERIFY FREEZE FRAME DATA HAS BEEN RECORDED** • Has FREEZE FRAME DATA been recorded?	Yes	Go to next step.
		No	Record FREEZE FRAME DATA on repair order, then go to next step.
2	**VERIFY RELATED SERVICE INFORMATION AVAILABILITY** • Check for related Service Information availability. • Is any related Service Information available?	Yes	Perform repair or diagnosis according to available Service Information. • If vehicle is not repaired, go to next step.
		No	Go to next step.

STEP	INSPECTION		ACTION
3	**INSPECT IGNITION COIL CONNECTOR** • Turn ignition key to OFF. • Disconnect ignition coil connector. • Check for poor connection (damaged, pulled-out terminals, corrosion, etc.). • Is there any malfunction?	Yes	Repair or replace terminals, then go to Step 10.
		No	Go to next step.
4	**INSPECT IGNITION COIL POWER SUPPLY CIRCUIT FOR OPEN CIRCUIT** • Disconnect ignition coil connector. • Turn ignition key to ON (Engine OFF). • Measure voltage between ignition coil terminal A (harness-side) and body ground. • Is voltage **B+**?	Yes	Go to next step.
		No	Repair or replace wiring harness for open, then go to Step 10.
5	**INSPECT IGNITION COIL SIGNAL CIRCUIT FOR SHORT TO POWER** • Measure voltage between ignition coil terminal B (harness-side) and body ground. • Is voltage **B+**?	Yes	Repair or replace wiring harness for short to power, then go to Step 10.
		No	Go to next step.
6	**INSPECT IGNITION COIL SIGNAL CIRCUIT FOR SHORT TO GROUND** • Check continuity between ignition coil terminal B (harness-side) and body ground. • Is there continuity?	Yes	Repair or replace wiring harness for short to ground, then go to Step 10.
		No	Go to next step.
7	**INSPECT PCM CONNECTOR** • Turn ignition key to OFF. • Disconnect PCM connector. • Check for poor connection (damaged, pulled-out terminals, corrosion, etc.). • Is there any malfunction?	Yes	Repair or replace terminals, then go to Step 10.
		No	Go to next step.
8	**INSPECT IGNITION COIL SIGNAL CIRCUIT FOR OPEN CIRCUIT** • Check continuity between PCM terminal 1 (harness-side) and ignition coil terminal B (harness-side). • Is there continuity?	Yes	Go to next step.
		No	Repair or replace wiring harness for open, then go to Step 10.
9	**INSPECT IGNITION COIL** • Inspect ignition coil. (See G–16 IGNITION COIL INSPECTION.) • Is ignition coil okay?	Yes	Go to next step.
		No	Replace ignition coil, then go to next step.
10	**VERIFY TROUBLESHOOTING OF DTC P0352 COMPLETED** • Make sure to reconnect all disconnected connectors. • Turn ignition key to ON (Engine OFF). • Clear DTC from memory using WDS or equivalent. • Start the engine. • Is PENDING CODE of same DTC present?	Yes	Replace PCM, then go to next step.
		No	Go to next step.
11	**VERIFY AFTER REPAIR PROCEDURE** • Perform “After Repair Procedure”. (See F4–110 AFTER REPAIR PROCEDURE.) • Is there any DTC present?	Yes	Go to applicable DTC inspection. (See F4–113 DTC TABLE.)
		No	Troubleshooting completed.

End Of Sie

F4

DTC P0353

AME427001085W09

Australian, General (R.H.D. L.H.D.) Specs.

DTC P0353	Ignition coil No.2 circuit malfunction
DETECTION CONDITION	• PCM monitors output voltage to ignition coil No.2 when engine is running. If the voltage is incorrect, PCM determines that ignition coil circuit has a malfunction. **Diagnostic support note** • This is a continuous monitor (CCM). • MIL illuminates if PCM detects the above malfunction condition in two consecutive drive cycles. • PENDING CODE is available if PCM detects the above malfunction condition during first drive cycle. • FREEZE FRAME DATA is available. • DTC is stored in the PCM memory.
POSSIBLE CAUSE	• Connector or terminal malfunction • Open circuit between PCM terminal 52 and ignition coil No.2 terminal A • Short to power circuit between PCM terminal 52 and ignition coil No.2 terminal A • Short to ground circuit between PCM terminal 52 and ignition coil No.2 terminal A • Open circuit between ignition switch and ignition coil No.2 terminal B • Ignition coil No.2 malfunction

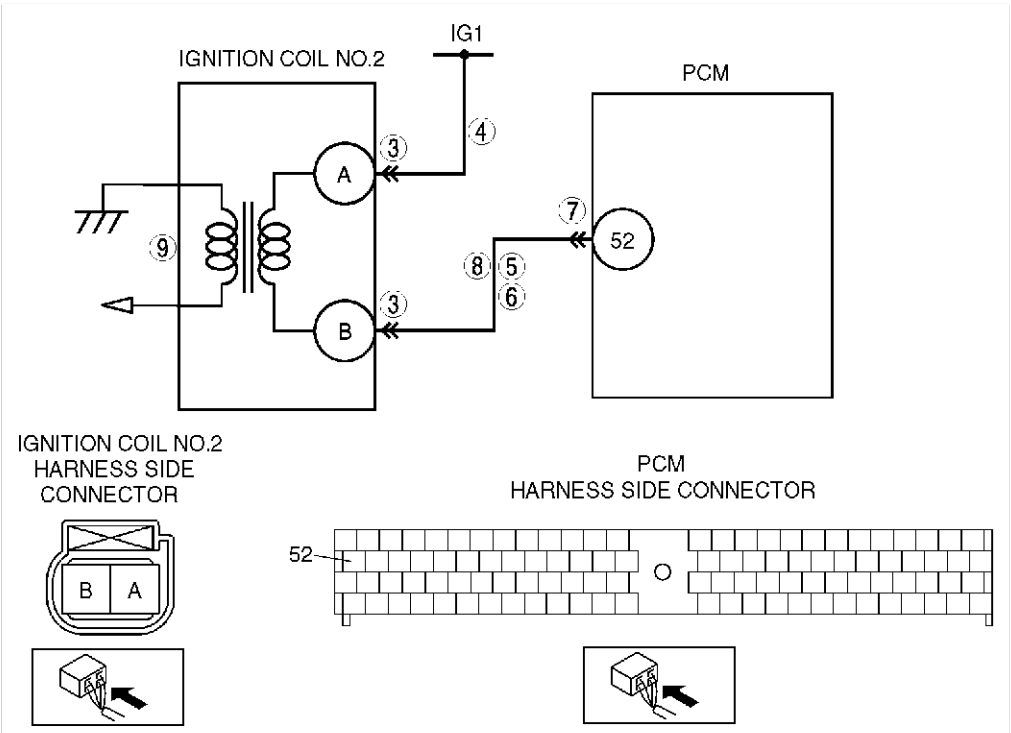

Diagnostic procedure

STEP	INSPECTION		ACTION
1	**VERIFY FREEZE FRAME DATA HAS BEEN RECORDED** • Has FREEZE FRAME DATA been recorded?	Yes	Go to next step.
		No	Record FREEZE FRAME DATA on repair order, then go to next step.
2	**VERIFY RELATED SERVICE INFORMATION AVAILABILITY** • Check for related Service Information availability. • Is any related Service Information available?	Yes	Perform repair or diagnosis according to available Service Information. • If vehicle is not repaired, go to next step.
		No	Go to next step.

STEP	INSPECTION		ACTION
3	**INSPECT IGNITION COIL CONNECTOR** • Turn ignition key to OFF. • Disconnect ignition coil connector. • Check for poor connection (damaged, pulled-out terminals, corrosion, etc.). • Is there any malfunction?	Yes	Repair or replace terminals, then go to Step 10.
		No	Go to next step.
4	**INSPECT IGNITION COIL POWER SUPPLY CIRCUIT FOR OPEN CIRCUIT** • Disconnect ignition coil connector. • Turn ignition key to ON (Engine OFF). • Measure voltage between ignition coil terminal A (harness-side) and body ground. • Is voltage **B+**?	Yes	Go to next step.
		No	Repair or replace wiring harness for open, then go to Step 10.
5	**INSPECT IGNITION COIL SIGNAL CIRCUIT FOR SHORT TO POWER** • Measure voltage between ignition coil terminal B (harness-side) and body ground. • Is voltage **B+**?	Yes	Repair or replace wiring harness for short to power, then go to Step 10.
		No	Go to next step.
6	**INSPECT IGNITION COIL SIGNAL CIRCUIT FOR SHORT TO GROUND** • Check continuity between ignition coil terminal B (harness-side) and body ground. • Is there continuity?	Yes	Repair or replace wiring harness for short to ground, then go to Step 10.
		No	Go to next step.
7	**INSPECT PCM CONNECTOR** • Turn ignition key to OFF. • Disconnect PCM connector. • Check for poor connection (damaged, pulled-out terminals, corrosion, etc.). • Is there any malfunction?	Yes	Repair or replace terminals, then go to Step 10.
		No	Go to next step.
8	**INSPECT IGNITION COIL SIGNAL CIRCUIT FOR OPEN CIRCUIT** • Check continuity between PCM terminal 52 (harness-side) and ignition coil terminal B (harness-side). • Is there continuity?	Yes	Go to next step.
		No	Repair or replace wiring harness for open, then go to Step 10.
9	**INSPECT IGNITION COIL** • Inspect ignition coil. (See G–16 IGNITION COIL INSPECTION.) • Is ignition coil okay?	Yes	Go to next step.
		No	Replace ignition coil, then go to next step.
10	**VERIFY TROUBLESHOOTING OF DTC P0353 COMPLETED** • Make sure to reconnect all disconnected connectors. • Turn ignition key to ON (Engine OFF). • Clear DTC from memory using WDS or equivalent. • Start the engine. • Is PENDING CODE of same DTC present?	Yes	Replace PCM, then go to next step.
		No	Go to next step.
11	**VERIFY AFTER REPAIR PROCEDURE** • Perform “After Repair Procedure”. (See F4–110 AFTER REPAIR PROCEDURE.) • Is there any DTC present?	Yes	Go to applicable DTC inspection. (See F4–113 DTC TABLE.)
		No	Troubleshooting completed.

End Of Sie

DTC P0354

AME427001085W10

Australian, General (R.H.D. L.H.D.) Specs.

DTC P0354	Ignition coil No.5 circuit malfunction
DETECTION CONDITION	• PCM monitors output voltage to ignition coil No.5 when engine is running. If the voltage is incorrect, PCM determines that ignition coil circuit has a malfunction. **Diagnostic support note** • This is a continuous monitor (CCM). • MIL illuminates if PCM detects the above malfunction condition in two consecutive drive cycles. • PENDING CODE is available if PCM detects the above malfunction condition during first drive cycle. • FREEZE FRAME DATA is available. • DTC is stored in the PCM memory.
POSSIBLE CAUSE	• Connector or terminal malfunction • Open circuit between PCM terminal 27 and ignition coil No.5 terminal A • Short to power circuit between PCM terminal 27 and ignition coil No.5 terminal A • Short to ground circuit between PCM terminal 27 and ignition coil No.5 terminal A • Open circuit between ignition switch and ignition coil No.5 terminal B • Ignition coil No.5 malfunction

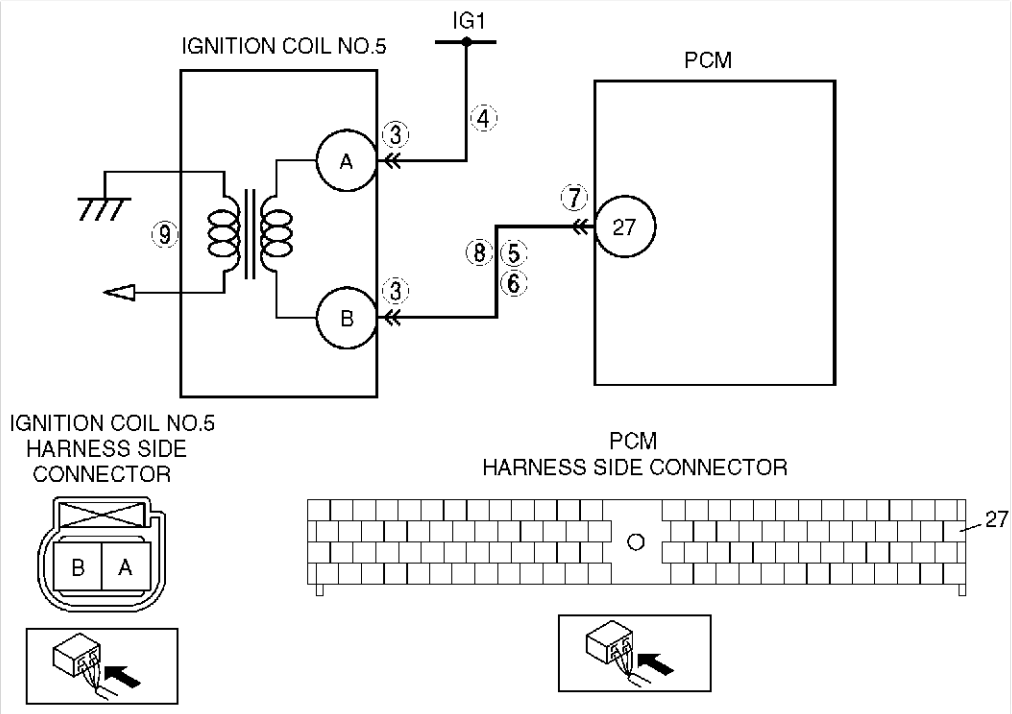

Diagnostic procedure

STEP	INSPECTION		ACTION
1	**VERIFY FREEZE FRAME DATA HAS BEEN RECORDED** • Has FREEZE FRAME DATA been recorded?	Yes	Go to next step.
		No	Record FREEZE FRAME DATA on repair order, then go to next step.
2	**VERIFY RELATED SERVICE INFORMATION AVAILABILITY** • Check for related Service Information availability. • Is any related Service Information available?	Yes	Perform repair or diagnosis according to available Service Information. • If vehicle is not repaired, go to next step.
		No	Go to next step.

STEP	INSPECTION		ACTION
3	**INSPECT IGNITION COIL CONNECTOR** • Turn ignition key to OFF. • Disconnect ignition coil connector. • Check for poor connection (damaged, pulled-out terminals, corrosion, etc.). • Is there any malfunction?	Yes	Repair or replace terminals, then go to Step 10.
		No	Go to next step.
4	**INSPECT IGNITION COIL POWER SUPPLY CIRCUIT FOR OPEN CIRCUIT** • Disconnect ignition coil connector. • Turn ignition key to ON (Engine OFF). • Measure voltage between ignition coil terminal A (harness-side) and body ground. • Is voltage **B+**?	Yes	Go to next step.
		No	Repair or replace wiring harness for open, then go to Step 10.
5	**INSPECT IGNITION COIL SIGNAL CIRCUIT FOR SHORT TO POWER** • Measure voltage between ignition coil terminal B (harness-side) and body ground. • Is voltage **B+**?	Yes	Repair or replace wiring harness for short to power, then go to Step 10.
		No	Go to next step.
6	**INSPECT IGNITION COIL SIGNAL CIRCUIT FOR SHORT TO GROUND** • Check continuity between ignition coil terminal B (harness-side) and body ground. • Is there continuity?	Yes	Repair or replace wiring harness for short to ground, then go to Step 10.
		No	Go to next step.
7	**INSPECT PCM CONNECTOR** • Turn ignition key to OFF. • Disconnect PCM connector. • Check for poor connection (damaged, pulled-out terminals, corrosion, etc.). • Is there any malfunction?	Yes	Repair or replace terminals, then go to Step 10.
		No	Go to next step.
8	**INSPECT IGNITION COIL SIGNAL CIRCUIT FOR OPEN CIRCUIT** • Check continuity between PCM terminal 27 (harness-side) and ignition coil terminal B (harness-side). • Is there continuity?	Yes	Go to next step.
		No	Repair or replace wiring harness for open, then go to Step 10.
9	**INSPECT IGNITION COIL** • Inspect ignition coil. (See G–16 IGNITION COIL INSPECTION.) • Is ignition coil okay?	Yes	Go to next step.
		No	Replace ignition coil, then go to next step.
10	**VERIFY TROUBLESHOOTING OF DTC P0354 COMPLETED** • Make sure to reconnect all disconnected connectors. • Turn ignition key to ON (Engine OFF). • Clear DTC from memory using WDS or equivalent. • Start the engine. • Is PENDING CODE of same DTC present?	Yes	Replace PCM, then go to next step.
		No	Go to next step.
11	**VERIFY AFTER REPAIR PROCEDURE** • Perform “After Repair Procedure”. (See F4–110 AFTER REPAIR PROCEDURE.) • Is there any DTC present?	Yes	Go to applicable DTC inspection. (See F4–113 DTC TABLE.)
		No	Troubleshooting completed.

End Of Sie

DTC P0355

AME427001085W11

Australian, General (R.H.D. L.H.D.) Specs.

DTC P0355	Ignition coil No.3 circuit malfunction
DETECTION CONDITION	• PCM monitors output voltage to ignition coil No.3 when engine is running. If the voltage is incorrect, PCM determines that ignition coil circuit has a malfunction. **Diagnostic support note** • This is a continuous monitor (CCM). • MIL illuminates if PCM detects the above malfunction condition in two consecutive drive cycles. • PENDING CODE is available if PCM detects the above malfunction condition during first drive cycle. • FREEZE FRAME DATA is available. • DTC is stored in the PCM memory.
POSSIBLE CAUSE	• Connector or terminal malfunction • Open circuit between PCM terminal 78 and ignition coil No.3 terminal A • Short to power circuit between PCM terminal 78 and ignition coil No.3 terminal A • Short to ground circuit between PCM terminal 78 and ignition coil No.3 terminal A • Open circuit between ignition switch and ignition coil No.3 terminal B • Ignition coil No.3 malfunction

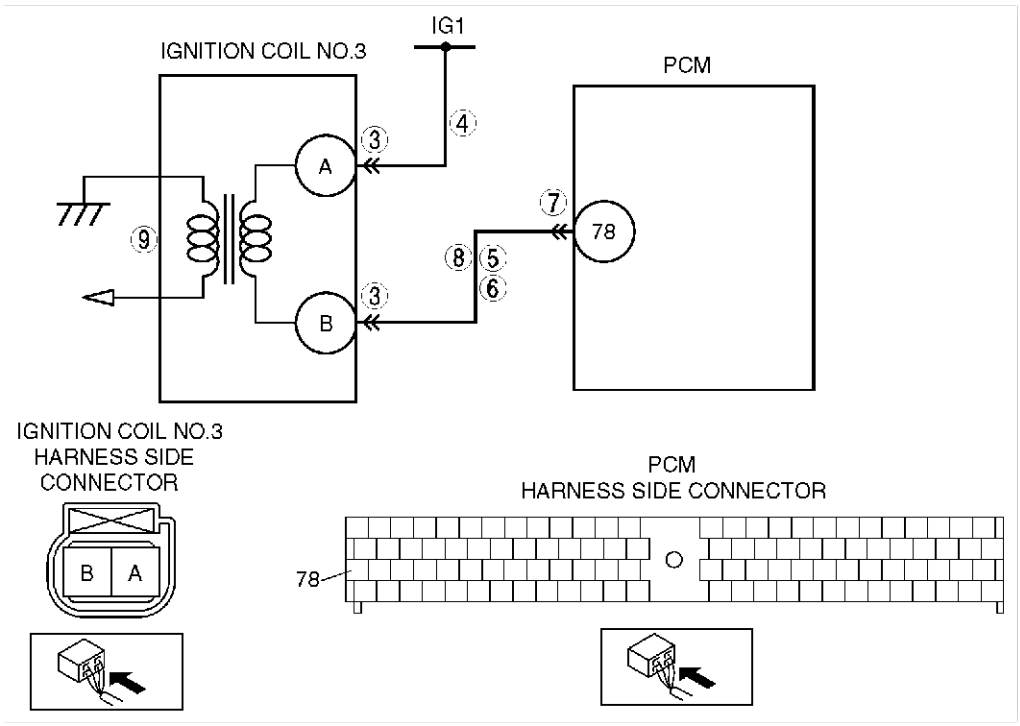

Diagnostic procedure

STEP	INSPECTION		ACTION
1	**VERIFY FREEZE FRAME DATA HAS BEEN RECORDED** • Has FREEZE FRAME DATA been recorded?	Yes	Go to next step.
		No	Record FREEZE FRAME DATA on repair order, then go to next step.
2	**VERIFY RELATED SERVICE INFORMATION AVAILABILITY** • Check for related Service Information availability. • Is any related Service Information available?	Yes	Perform repair or diagnosis according to available Service Information. • If vehicle is not repaired, go to next step.
		No	Go to next step.

STEP	INSPECTION		ACTION
3	**INSPECT IGNITION COIL CONNECTOR** • Turn ignition key to OFF. • Disconnect ignition coil connector. • Check for poor connection (damaged, pulled-out terminals, corrosion, etc.). • Is there any malfunction?	Yes	Repair or replace terminals, then go to Step 10.
		No	Go to next step.
4	**INSPECT IGNITION COIL POWER SUPPLY CIRCUIT FOR OPEN CIRCUIT** • Disconnect ignition coil connector. • Turn ignition key to ON (Engine OFF). • Measure voltage between ignition coil terminal A (harness-side) and body ground. • Is voltage **B+**?	Yes	Go to next step.
		No	Repair or replace wiring harness for open, then go to Step 10.
5	**INSPECT IGNITION COIL SIGNAL CIRCUIT FOR SHORT TO POWER** • Measure voltage between ignition coil terminal B (harness-side) and body ground. • Is voltage **B+**?	Yes	Repair or replace wiring harness for short to power, then go to Step 10.
		No	Go to next step.
6	**INSPECT IGNITION COIL SIGNAL CIRCUIT FOR SHORT TO GROUND** • Check continuity between ignition coil terminal B (harness-side) and body ground. • Is there continuity?	Yes	Repair or replace wiring harness for short to ground, then go to Step 10.
		No	Go to next step.
7	**INSPECT PCM CONNECTOR** • Turn ignition key to OFF. • Disconnect PCM connector. • Check for poor connection (damaged, pulled-out terminals, corrosion, etc.). • Is there any malfunction?	Yes	Repair or replace terminals, then go to Step 10.
		No	Go to next step.
8	**INSPECT IGNITION COIL SIGNAL CIRCUIT FOR OPEN CIRCUIT** • Check continuity between PCM terminal 78 (harness-side) and ignition coil terminal B (harness-side). • Is there continuity?	Yes	Go to next step.
		No	Repair or replace wiring harness for open, then go to Step 10.
9	**INSPECT IGNITION COIL** • Inspect ignition coil. (See G–16 IGNITION COIL INSPECTION.) • Is ignition coil okay?	Yes	Go to next step.
		No	Replace ignition coil, then go to next step.
10	**VERIFY TROUBLESHOOTING OF DTC P0355 COMPLETED** • Make sure to reconnect all disconnected connectors. • Turn ignition key to ON (Engine OFF). • Clear DTC from memory using WDS or equivalent. • Start the engine. • Is PENDING CODE of same DTC present?	Yes	Replace PCM, then go to next step.
		No	Go to next step.
11	**VERIFY AFTER REPAIR PROCEDURE** • Perform “After Repair Procedure”. (See F4–110 AFTER REPAIR PROCEDURE.) • Is there any DTC present?	Yes	Go to applicable DTC inspection. (See F4–113 DTC TABLE.)
		No	Troubleshooting completed.

End Of Sie

DTC P0356

AME427001085W12

Australian, General (R.H.D. L.H.D.) Specs.

DTC P0356	Ignition coil No.6 circuit malfunction
DETECTION CONDITION	• PCM monitors output voltage to ignition coil No.6 when engine is running. If the voltage is incorrect, PCM determines that ignition coil circuit has a malfunction. **Diagnostic support note** • This is a continuous monitor (CCM). • MIL illuminates if PCM detects the above malfunction condition in two consecutive drive cycles. • PENDING CODE is available if PCM detects the above malfunction condition during first drive cycle. • FREEZE FRAME DATA is available. • DTC is stored in the PCM memory.
POSSIBLE CAUSE	• Connector or terminal malfunction • Open circuit between PCM terminal 82 and ignition coil No.6 terminal A • Short to power circuit between PCM terminal 82 and ignition coil No.6 terminal A • Short to ground circuit between PCM terminal 82 and ignition coil No.6 terminal A • Open circuit between ignition switch and ignition coil No.6 terminal B • Ignition coil No.6 malfunction

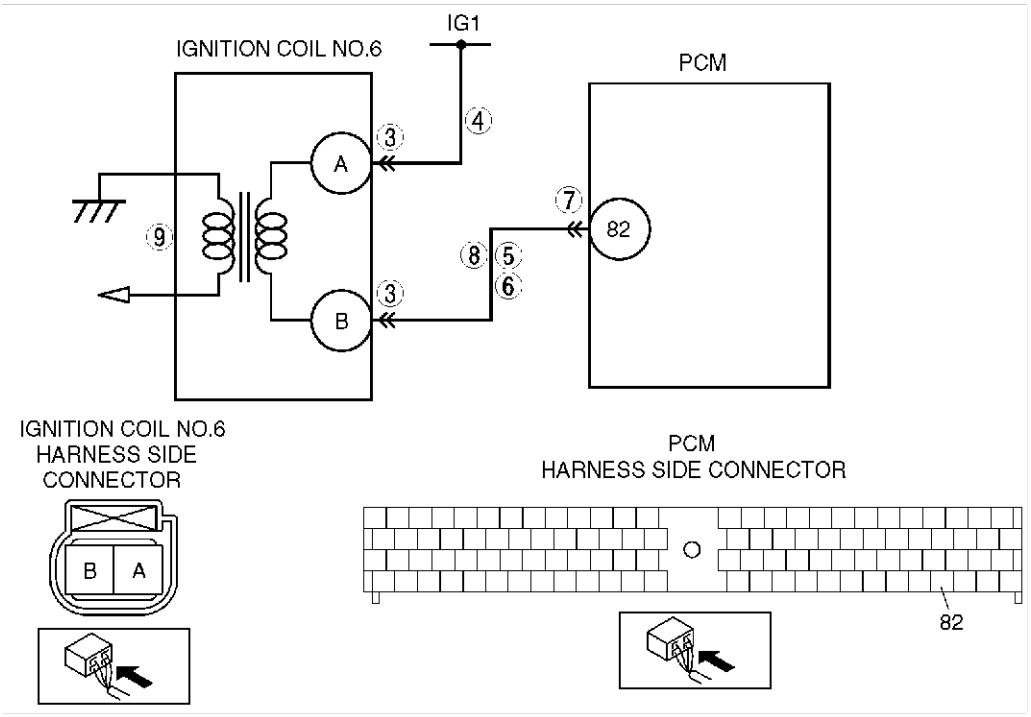

Diagnostic procedure

STEP	INSPECTION		ACTION
1	**VERIFY FREEZE FRAME DATA HAS BEEN RECORDED** • Has FREEZE FRAME DATA been recorded?	Yes	Go to next step.
		No	Record FREEZE FRAME DATA on repair order, then go to next step.
2	**VERIFY RELATED SERVICE INFORMATION AVAILABILITY** • Check for related Service Information availability. • Is any related Service Information available?	Yes	Perform repair or diagnosis according to available Service Information. • If vehicle is not repaired, go to next step.
		No	Go to next step.

STEP	INSPECTION		ACTION
3	**INSPECT IGNITION COIL CONNECTOR** • Turn ignition key to OFF. • Disconnect ignition coil connector. • Check for poor connection (damaged, pulled-out terminals, corrosion, etc.). • Is there any malfunction?	Yes	Repair or replace terminals, then go to Step 10.
		No	Go to next step.
4	**INSPECT IGNITION COIL POWER SUPPLY CIRCUIT FOR OPEN CIRCUIT** • Disconnect ignition coil connector. • Turn ignition key to ON (Engine OFF). • Measure voltage between ignition coil terminal A (harness-side) and body ground. • Is voltage **B+**?	Yes	Go to next step.
		No	Repair or replace wiring harness for open, then go to Step 10.
5	**INSPECT IGNITION COIL SIGNAL CIRCUIT FOR SHORT TO POWER** • Measure voltage between ignition coil terminal B (harness-side) and body ground. • Is voltage **B+**?	Yes	Repair or replace wiring harness for short to power, then go to Step 10.
		No	Go to next step.
6	**INSPECT IGNITION COIL SIGNAL CIRCUIT FOR SHORT TO GROUND** • Check continuity between ignition coil terminal B (harness-side) and body ground. • Is there continuity?	Yes	Repair or replace wiring harness for short to ground, then go to Step 10.
		No	Go to next step.
7	**INSPECT PCM CONNECTOR** • Turn ignition key to OFF. • Disconnect PCM connector. • Check for poor connection (damaged, pulled-out terminals, corrosion, etc.). • Is there any malfunction?	Yes	Repair or replace terminals, then go to Step 10.
		No	Go to next step.
8	**INSPECT IGNITION COIL SIGNAL CIRCUIT FOR OPEN CIRCUIT** • Check continuity between PCM terminal 82 (harness-side) and ignition coil terminal B (harness-side). • Is there continuity?	Yes	Go to next step.
		No	Repair or replace wiring harness for open, then go to Step 10.
9	**INSPECT IGNITION COIL** • Inspect ignition coil. (See G–16 IGNITION COIL INSPECTION.) • Is ignition coil okay?	Yes	Go to next step.
		No	Replace ignition coil, then go to next step.
10	**VERIFY TROUBLESHOOTING OF DTC P0356 COMPLETED** • Make sure to reconnect all disconnected connectors. • Turn ignition key to ON (Engine OFF). • Clear DTC from memory using WDS or equivalent. • Start the engine. • Is PENDING CODE of same DTC present?	Yes	Replace PCM, then go to next step.
		No	Go to next step.
11	**VERIFY AFTER REPAIR PROCEDURE** • Perform “After Repair Procedure”. (See F4–110 AFTER REPAIR PROCEDURE.) • Is there any DTC present?	Yes	Go to applicable DTC inspection. (See F4–113 DTC TABLE.)
		No	Troubleshooting completed.

End Of Sie

DTC P0401

AME427001086W01

Australian, General (L.H.D. R.H.D.) Specs.

DTC P0401	EGR flow insufficient detected
DETECTION CONDITION	• PCM monitors difference in intake manifold pressures when EGR is operated and when it is stopped. If the difference is too small, PCM determines that EGR flow insufficient. **Diagnostic support note** • This is an intermittent monitor (EGR). • MIL illuminates if PCM detects the above malfunction conditions in two consecutive drive cycles. • DIAGNOSTIC MONITORING TEST RESULTS and PENDING CODE is available if PCM detects the above malfunction condition during first drive cycle. • FREEZE FRAME DATA is available. • DTC is stored in the PCM memory.
POSSIBLE CAUSE	• EGR valve malfunction • EGR boost sensor malfunction • EGR boost sensor solenoid valve malfunction • EGR gasket malfunction • PCM malfunction

Diagnostic procedure

STEP	INSPECTION		ACTION
1	**VERIFY FREEZE FRAME DATA HAS BEEN RECORDED** • Has FREEZE FRAME DATA been recorded?	Yes	Go to next step.
		No	Record FREEZE FRAME DATA on repair order, then go to next step.
2	**VERIFY RELATED SERVICE INFORMATION AVAILABILITY** • Check for related Service Information availability. • Is any related Service Information available?	Yes	Perform repair or diagnosis according to available Service Information. • If vehicle is not repaired, go to next step.
		No	Go to next step.
3	**INSPECT FOR OTHER DTCS** • Turn ignition key to OFF then ON (Engine OFF). • Have other DTCs been stored?	Yes	Repair circuit malfunction for applicable DTCs.
		No	Go to next step.
4	**INSPECT VACUUM HOSE CONDITION** • Inspect vacuum hoses for clogs, any damages, frozen, or vacuum leakage. • Is there any malfunction?	Yes	Replace vacuum hoses, then go to Step 9.
		No	Go to next step.
5	**INSPECT EGR VALVE MALFUNCTION** • Perform EGR valve inspection. (See F4–86 EGR VALVE INSPECTION) • Is EGR valve okay?	Yes	Go to next step.
		No	Replace EGR valve, then go to Step 9.
6	**INSPECT EGR BOOST SENSOR MALFUNCTION** • Perform EGR boost sensor inspection. (See F4–104 BAROMETRIC PRESSURE SENSOR/EGR BOOST SENSOR INSPECTION) • Is EGR valve okay?	Yes	Go to next step.
		No	Replace EGR boost sensor, then go to Step 9.

STEP	INSPECTION		ACTION
7	**INSPECT EGR BOOST SENSOR SOLENOID VALVE** • Perform EGR boost sensor solenoid valve inspection. (See F4–87 EGR BOOST SENSOR SOLENOID VALVE INSPECTION) • Is EGR valve okay?	Yes	Replace EGR boost sensor solenoid valve, then go to Step 9.
		No	Go to next step.
8	**INSPECT EGR VALVE PASSAGE** • Turn ignition key to OFF. • Remove EGR valve. • Is gasket installation normal?	Yes	Go to next step.
		No	Install gasket correctly, then go to next step.
9	**MONITOR EGR SYSTEM BY DRIVE MODE** • Clear DTC from PCM memory using WDS or equivalent. • Run PCM adaptive memory procedure drive mode. (See F4–110 OBD DRIVE MODE.) • Access RFC FLAG PID using WDS or equivalent. • Is RFC FLAG PID OFF?	Yes	Retry this step.
		No	Go to next step.
10	**MONITOR EGR SYSTEM BY DRIVE MODE** • Run HO2S heater, HO2S, and EGR system repair verification drive mode. (See F4–110 OBD DRIVE MODE.) • Check EGR System Monitor is checked using On-Board Readiness Test function. • Has EGR system been monitored?	Yes	Go to next step.
		No	Retry this step.
11	**VERIFY TROUBLESHOOTING OF DTC P0401 COMPLETED** • Make sure to reconnect all disconnected connectors. • Access DIAGNOSTIC MONITORING TEST RESULTS. (See F4–110 Diagnostic monitoring test results access procedure.) • Verify TEST ID 10:41:00 value. • Is value within specification?	Yes	Go to next step.
		No	Replace PCM, then go to next step.
12	**VERIFY AFTER REPAIR PROCEDURE** • Perform “After Repair Procedure”. (See F4–110 AFTER REPAIR PROCEDURE.) • Is there any DTC present?	Yes	Go to applicable DTC inspection. (See F4–113 DTC TABLE.)
		No	Troubleshooting completed.

End Of Ste

DTC P0402

AME427001086W02

Australian, General (L.H.D. R.H.D.) Specs.

DTC P0402	EGR flow excessive detected
DETECTION CONDITION	• PCM monitors difference in intake manifold pressures when EGR is operated and when it is stopped. If the difference is too large, PCM determines that EGR flow excessive. **Diagnostic support note** • This is an intermittent monitor (EGR). • MIL illuminates if PCM detects the above malfunction conditions in two consecutive drive cycles. • PENDING CODE is available if PCM detects the above malfunction condition during first drive cycle. • FREEZE FRAME DATA is available. • DTC is stored in the PCM memory.
POSSIBLE CAUSE	• EGR valve gasket is not installed. • EGR valve gasket has been damaged. • PCM malfunction

Diagnostic procedure

STEP	INSPECTION		ACTION
1	**VERIFY FREEZE FRAME DATA HAS BEEN RECORDED** • Has FREEZE FRAME DATA been recorded?	Yes	Go to next step.
		No	Record FREEZE FRAME DATA on repair order, then go to next step.
2	**VERIFY RELATED SERVICE INFORMATION AVAILABILITY** • Check for related Service Information availability. • Is any related Service Information available?	Yes	Perform repair or diagnosis according to available Service Information. • If vehicle is not repaired, go to next step.
		No	Go to next step.
3	**INSPECT FOR OTHER DTCS** • Turn ignition key to OFF then ON (Engine OFF). • Have other DTCs been stored?	Yes	Repair circuit malfunction for applicable DTCs.
		No	Go to next step.
4	**INSPECT EGR VALVE GASKET HAS INSTALLED** • Turn ignition key to OFF. • Remove EGR valve. • Is EGR valve gasket installed?	Yes	Go to next step.
		No	Install EGR valve gasket, then go to Step 6.

STEP	INSPECTION		ACTION
5	**INSPECT EGR VALVE GASKET MALFUNCTION** • Does EGR valve gasket have any crack and/or damage?	Yes	Replace EGR valve gasket, then go to Step 6.
		No	Go to next step.
6	**MONITOR EGR SYSTEM BY DRIVE MODE** • Clear DTC from PCM memory using WDS or equivalent. • Run PCM adaptive memory procedure drive mode. (See F4–110 OBD DRIVE MODE.) • Access RFC FLAG PID using WDS or equivalent. • Is RFC FLAG PID OFF?	Yes	Retry this step.
		No	Go to next step.
7	**MONITOR EGR SYSTEM BY DRIVE MODE** • Run HO2S heater, HO2S, and EGR system repair verification drive mode. (See F4–110 OBD DRIVE MODE.) • Check EGR system Monitor has checked using On-Board Readiness Test function. • Has EGR system been monitored?	Yes	Go to next step.
		No	Retry this step.
8	**VERIFY TROUBLESHOOTING OF DTC P0402 COMPLETED** • Make sure to reconnect all disconnected connectors. • Access DIAGNOSTIC MONITORING TEST RESULTS. (See F4–110 Diagnostic monitoring test results access procedure.) • Verify TEST ID 10:41:00 value. • Is value within specification?	Yes	Go to next step.
		No	Replace PCM, then go to next step.
9	**VERIFY AFTER REPAIR PROCEDURE** • Perform “After Repair Procedure”. (See F4–110 AFTER REPAIR PROCEDURE.) • Is there any DTC present?	Yes	Go to applicable DTC inspection. (See F4–113 DTC TABLE.)
		No	Troubleshooting completed.

End Of Se

DTC P0403

AME427001086W03

DTC P0403	EGR valve (stepper motor) circuit malfunction
DETECTION CONDITION	• The PCM monitors the input voltages from EGR valve control signals. If voltage is below or above specified, PCM determines that the EGR valve circuit has malfunction. **Diagnostic support note** • This is a continuous monitor.(CCM) • MIL illuminates if PCM detects the above malfunction conditions in two consecutive drive cycles. • PENDING CODE is available if PCM detects the above malfunction condition during first drive cycle. • FREEZE FRAME DATA is not available. • DTC is not stored in the PCM memory.
POSSIBLE CAUSE	• EGR valve malfunction • Connector or terminal malfunction • Short to ground circuit in wiring between EGR valve terminal E and PCM terminal 12 • Short to ground circuit in wiring between EGR valve terminal A and PCM terminal 72 • Short to ground circuit in wiring between EGR valve terminal B and PCM terminal 46 • Short to ground circuit in wiring between EGR valve terminal F and PCM terminal 56 • Open circuit in wiring between EGR valve terminal E and PCM terminal 12 • Open circuit in wiring between EGR valve terminal A and PCM terminal 72 • Open circuit in wiring between EGR valve terminal B and PCM terminal 46 • Open circuit in wiring between EGR valve terminal F and PCM terminal 56 • Open circuit in wiring between main relay terminal D and EGR valve terminal C • Open circuit in wiring between main relay terminal D and EGR valve terminal D • PCM malfunction

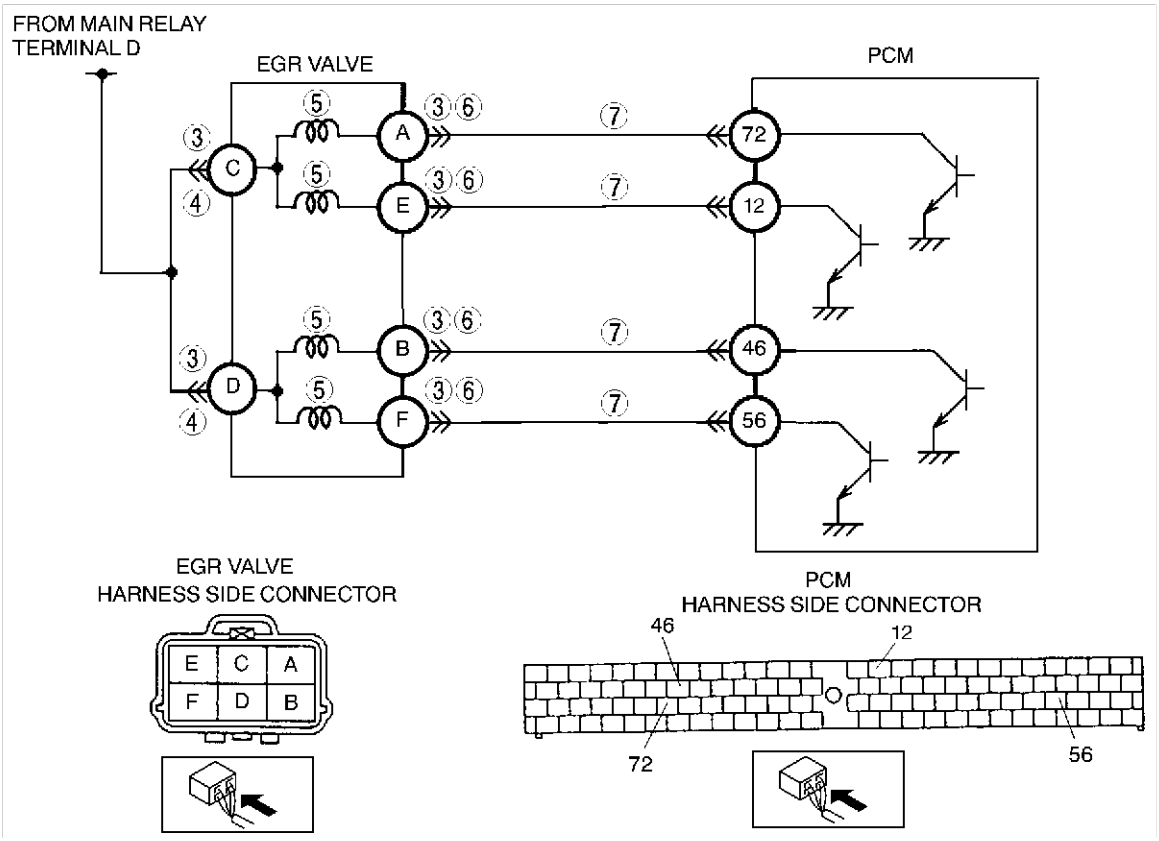

Diagnostic procedure

STEP	INSPECTION		ACTION
1	**VERIFY RELATED SERVICE INFORMATION AVAILABILITY** • Check for related Service Information availability. • Is any related Service Information available?	Yes	Perform repair or diagnosis according to available Service Information. • If vehicle is not repaired, go to next step.
		No	Go to next step.

STEP	INSPECTION		ACTION
2	**CLASSIFY INTERMITTENT CONCERN OR CONTINUOUS CONCERN** • Turn ignition key to OFF then ON (Engine OFF). • Is same DTC present?	Yes	Go to next step.
		No	Intermittent concern exists. Go to INTERMITTENT CONCERNS TROUBLESHOOTING procedure. (See F4–247 INTERMITTENT CONCERN TROUBLESHOOTING.)
3	**INSPECT EGR VALVE FOR POOR CONNECTION** • Turn ignition key to OFF. • Disconnect EGR valve connector. • Check for poor connection (damaged, pulled-out terminals, corrosion, etc.). • Is there any malfunctions?	Yes	Repair or replace terminals and/or connector, then go to Step 8.
		No	Go to next step.
4	**INSPECT POWER CIRCUIT FOR OPEN CIRCUIT** • Turn ignition key to ON (Engine OFF). • Measure following EGR valve power circuit terminal voltage. — EGR valve terminal C and body ground — EGR valve terminal D and body ground • Is voltage **B+**?	Yes	Go to next step.
		No	Repair or replace harness for open circuit then go to Step 8.
5	**INSPECT EGR VALVE** • Perform EGR valve inspection. (See F4–86 EGR VALVE INSPECTION) • Is EGR valve okay?	Yes	Go to next step.
		No	Replace EGR valve, then go to Step 8.
6	**INSPECT FOR CONTROL CIRCUIT FOR SHORT TO GROUND** • Check continuity following EGR valve control circuit. — EGR valve terminal E and body ground — EGR valve terminal A and body ground — EGR valve terminal B and body ground — EGR valve terminal F and body ground • Is there continuity?	Yes	Repair or replace harness for short to ground, then go to Step 8.
		No	Go to next step.
7	**INSPECT CONTROL CIRCUIT FOR OPEN CIRCUIT** • Disconnect PCM connector. • Check continuity following EGR control circuit. — EGR valve terminal E and PCM terminal 12 — EGR valve terminal A and PCM terminal 72 — EGR valve terminal B and PCM terminal 46 — EGR valve terminal F and PCM terminal 56 • Is there continuity?	Yes	Go to next step.
		No	Repair or replace harness for open circuit then go to next step.
8	**VERIFY TROUBLESHOOTING OF DTC P0403 COMPLETED** • Make sure to reconnect all disconnected connectors. • Turn ignition key to OFF then ON (Engine OFF). • Is same DTC present?	Yes	Replace PCM, then go to next step.
		No	Go to next step.
9	**VERIFY AFTER REPAIR PROCEDURE** • Perform “After Repair Procedure”. (See F4–110 AFTER REPAIR PROCEDURE.) • Is there any DTC present?	Yes	Go to applicable DTC inspection. (See F4–113 DTC TABLE.)
		No	Troubleshooting completed.

End Of Ste

DTC P0421, P0431

AME427001086W04

European (L.H.D.) Specs.

DTC P0421 DTC P0431	Warm-up catalyst system (RH/LH) efficiency below threshold
DETECTION CONDITION	• PCM compares the number of HO2S (Front) and HO2S (Rear) inversions for a predetermined time. PCM monitors the number of inversions the rear side performs while the front side inverts for a specified number of times when the following monitoring conditions are met. PCM detects the inversion ratio. If inversion ratio is below threshold, PCM determined that catalyst system has deteriorated. **MONITORING CONDITION** — Engine speed **1,340—2,000 rpm** — Calculated load **19.5—44%**(*1) — Vehicle speed **39.5—96.0 km/h {24.5—59.5 mph}** *1: Maximum calculated load value varies depends on engine speed. **Diagnostic support note** • This is an intermittent monitor. (CATALYST) • MIL illuminates if PCM detects the above malfunction conditions in two consecutive drive cycles. • DIAGNOSTIC MONITORING TEST RESULTS and PENDING CODE are stored if PCM detects the above malfunction condition during first drive cycle. • FREEZE FRAME DATA is available. • DTC is stored in the PCM memory.
POSSIBLE CAUSE	• WU-TWC deterioration or malfunction • Exhaust gas leakage • Looseness of HO2S (Front) • Looseness of HO2S (Rear) • Front HO2S malfunction

Diagnostic procedure

STEP	INSPECTION		ACTION
1	**VERIFY FREEZE FRAME DATA HAS BEEN RECORDED** • Has FREEZE FRAME DATA been recorded?	Yes	Go to next step.
		No	Record FREEZE FRAME DATA on repair order, then go to next step.
2	**VERIFY RELATED SERVICE INFORMATION AVAILABILITY** • Check for related Service Information availability. • Is any related Service Information available?	Yes	Perform repair or diagnosis according to available Service Information. • If vehicle is not repaired, go to next step.
		No	Go to next step.
3	**VERIFY RELATED PENDING CODE OR STORED DTCS** • Turn ignition key to OFF then ON (Engine OFF). • Verify related pending code or stored DTCs. • Is other DTCs present?	Yes	Go to appropriate DTC troubleshooting.
		No	Go to next step.

STEP	INSPECTION		ACTION
4	**INSPECT EXHAUST SYSTEM FOR GAS LEAKAGE** • Visually inspect exhaust system for exhaust gas leakage. • Is there any gas leakage?	Yes	Repair or replace faulty exhaust parts, then go to Step 7.
		No	Go to next step.
5	**INSPECT INSTALLATION OF FRONT AND REAR OXYGEN SENSORS** • Inspect for looseness of front and rear oxygen sensors. • Is it okay?	Yes	Go to next step.
		No	Retighten sensor, then go to Step 7.
6	**INSPECT FRONT HO2S VOLTAGE** • Access O2S11 for P0421 or O2S21 for P0431 PID using WDS or equivalent. • Verify PID while racing engine (in PARK or NEUTRAL). • Is PID reading okay? — **Above 0.45 V** when suddenly depress accelerator pedal (rich condition). — **Below 0.45 V** just after release accelerator pedal (lean condition)	Yes	Replace WU-TWC, then go to next step.
		No	Replace suspected sensor, then go to next step.
7	**VERIFY TROUBLESHOOTING OF DTC P0421 OR P0431 COMPLETED** • Make sure to reconnect all disconnected connectors. • Turn ignition key to ON (Engine OFF). • Clear DTC from memory using WDS or equivalent. • Run PCM adaptive memory procedure drive mode and HO2S heater, HO2S, and EGR system repair verification drive mode. (See F4–110 OBD DRIVE MODE.) • Is PENDING CODE of same DTC present?	Yes	Replace PCM, then go to next step.
		No	Go to next step.
8	**VERIFY AFTER REPAIR PROCEDURE** • Perform “After Repair Procedure”. (See F4–110 AFTER REPAIR PROCEDURE.) • Is there any DTC present?	Yes	Go to applicable DTC inspection. (See F4–113 DTC TABLE.)
		No	Troubleshooting completed.

End Of Ste

DTC P0443

AME427001086W05

DTC P0443	Evaporative emission control system purge control valve circuit malfunction
DETECTION CONDITION	• PCM monitors input voltages from purge solenoid valve. If voltage at PCM terminal 18 remains low or high, PCM determines that purge solenoid valve circuit has malfunction. **Diagnostic support note** • This is an continuous monitor (Other). • MIL illuminates if PCM detects the above malfunction conditions in two consecutive drive cycles. • FREEZE FRAME DATA is available. • DTC is stored in the PCM memory.
POSSIBLE CAUSE	• Purge solenoid valve malfunction • Connector or terminal malfunction • Short to ground in wiring between purge solenoid valve terminal B and PCM terminal 18 • Open circuit in wiring between main relay terminal D and purge solenoid valve terminal A • Open circuit in wiring between purge solenoid valve terminal B and PCM terminal 18 • Short to power circuit between purge solenoid valve terminal B and PCM terminal 18 • PCM malfunction

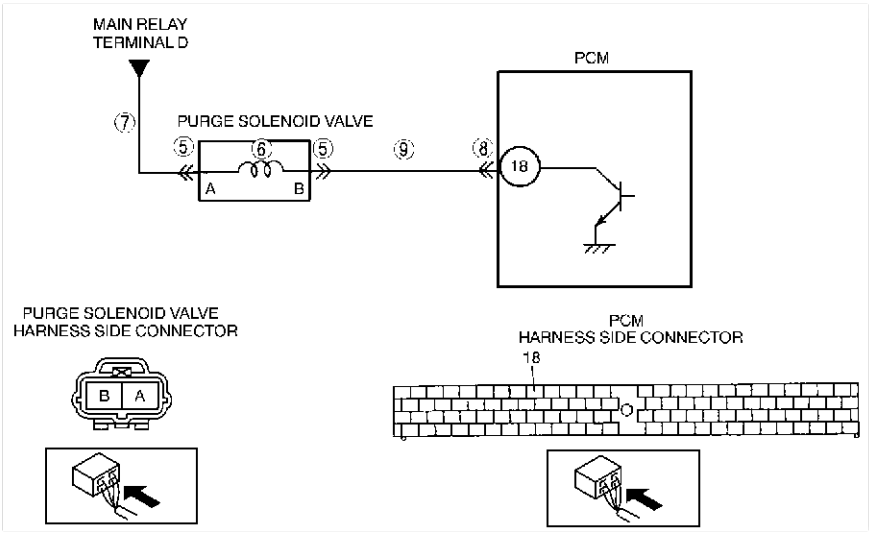

Diagnostic procedure

STEP	INSPECTION		ACTION
1	**VERIFY RELATED SERVICE INFORMATION AVAILABILITY** • Check for related Service Information availability. • Is any related Service Information available?	Yes	Perform repair or diagnosis according to available Service Information. • If vehicle is not repaired, go to next step.
		No	Go to next step.
2	**CLASSIFY INTERMITTENT CONCERN OR CONTINUOUS CONCERN** • Turn ignition key to OFF then start engine. • Is same DTC present?	Yes	Go to next step.
		No	Refer to intermittent concern. (See F4–247 INTERMITTENT CONCERN TROUBLESHOOTING.)
3	**CLASSIFY OPEN CIRCUIT OR SHORT TO GROUND MALFUNCTION** • Disconnect purge solenoid valve tube that is connected to intake manifold. • Connect vacuum pump to purge solenoid valve. • Pump vacuum pump several times and stop. • Wait **a few seconds**. • Is vacuum maintained?	Yes	Go to Step 5.
		No	Go to next step.

STEP	INSPECTION		ACTION
4	**INSPECT PASSAGE CONTROL OF PURGE SOLENOID VALVE** • Turn ignition key to OFF. • Disconnect purge solenoid valve connector. • Pump vacuum pump several times and wait **a few seconds**. • Is vacuum maintained?	Yes	Repair or replace harness for short to ground, then go to Step 10.
		No	Replace purge solenoid valve, then go to Step 10.
5	**INSPECT PURGE SOLENOID VALVE CONNECTOR FOR POOR CONNECTION** • Turn ignition key to OFF. • Check for poor connection (damaged/pulled-out pins, corrosion, etc.). • Is there malfunction?	Yes	Repair or replace terminal, then go to Step 10.
		No	Go to next step.
6	**INSPECT PURGE SOLENOID VALVE** • Perform purge solenoid valve inspection. (See F4–85 PURGE SOLENOID VALVE INSPECTION) • Is purge solenoid valve okay?	Yes	Go to next step.
		No	Replace purge solenoid valve, then go to Step 10.
7	**INSPECT PURGE SOLENOID VALVE POWER SUPPLY CIRCUIT FOR OPEN CIRCUIT** • Turn ignition key to ON (Engine OFF). • Measure voltage between purge solenoid valve connector terminal A and body ground. • Is voltage **B+**?	Yes	Go to next step.
		No	Repair or replace harness for open, then go to Step 10.
8	**INSPECT PCM CONNECTOR FOR POOR CONNECTION** • Turn ignition key to OFF. • Disconnect PCM connector. • Check for poor connection (damaged/pulled-out pins, corrosion, etc.). • Is there malfunction?	Yes	Repair or replace terminal, then go to Step 10.
		No	Go to next step.
9	**INSPECT PURGE SOLENOID VALVE CONTROL CIRCUIT** • Turn ignition key to ON (Engine OFF). • Measure voltage between purge solenoid valve terminal B (harness-side) and body ground. • Is voltage **B+**?	Yes	Repair or replace harness for short to power, then go to next step.
		No	Check for continuity between purge solenoid valve terminal B (harness-side) and PCM terminal 18. • If there is continuity, go to next step. • If there is no continuity, repair or replace harness for open, then go to next step.
10	**VERIFY TROUBLESHOOTING OF DTC P0443 COMPLETED** • Make sure to reconnect all disconnected connectors. • Turn ignition key to OFF then start engine. • Is PENDING CODE of same DTC present?	Yes	Replace PCM, then go to next step.
		No	Go to next step.
11	**VERIFY AFTER REPAIR PROCEDURE** • Perform “After Repair Procedure”. (See F4–110 AFTER REPAIR PROCEDURE.) • Is there any DTC present?	Yes	Go to applicable DTC inspection. (See F4–113 DTC TABLE.)
		No	Troubleshooting completed.

End Of Ste

DTC P0480

AME427001086W06

DTC P0480	Fan control circuit malfunction
DETECTION CONDITION	• PCM monitors input voltages from fan control module. If voltage at PCM terminal 44 remains low or high, PCM determines that fan control circuit has malfunction. **Diagnostic support note** • This is an continuous monitor (other). • MIL does not come on. • FREEZE FRAME DATA is not available. • DTC is stored in the PCM memory.
POSSIBLE CAUSE	• Connector or terminal malfunction • Short to power circuit between fan control module terminal B and PCM terminal 44 • Short to ground in wiring between fan control module terminal B and PCM terminal 44 • Open circuit in wiring between fan control module terminal B and PCM terminal 44 • Fan control module malfunction • PCM malfunction

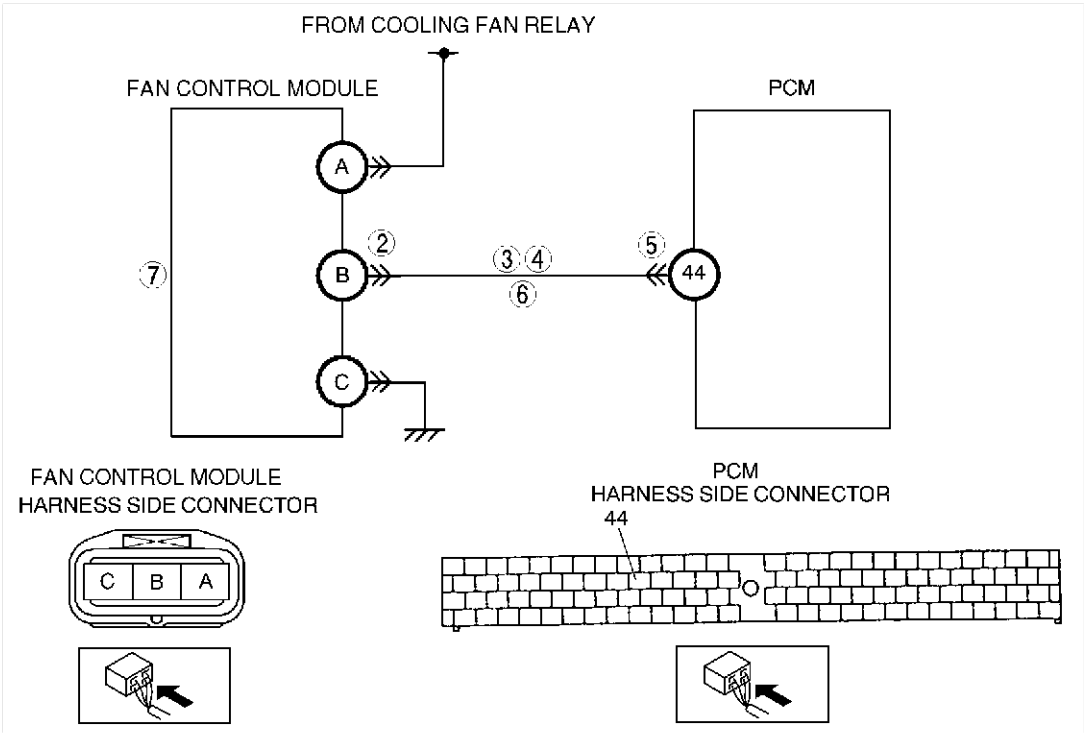

Diagnostic procedure

STEP	INSPECTION		ACTION
1	**VERIFY RELATED SERVICE INFORMATION AVAILABILITY** • Check for related Service Information availability. • Is any related Service Information available?	Yes	Perform repair or diagnosis according to available Service Information. • If vehicle is not repaired, go to next step.
		No	Go to next step.

STEP	INSPECTION		ACTION
2	**INSPECT FAN CONTROL MODULE CONNECTOR FOR POOR CONNECTION** • Turn ignition key to OFF. • Disconnect fan control module connector. • Check for poor connection (damaged/pulled-out pins, corrosion, etc.). • Is there malfunction?	Yes	Repair or replace terminal, then go to Step 8.
		No	Go to next step.
3	**INSPECT FAN CONTROL MODULE SIGNAL CIRCUIT FOR SHORT TO POWER** • Turn ignition key to ON (Engine OFF). • Measure voltage between fan control module connector terminal B and body ground. • Is voltage **B+**?	Yes	Repair or replace harness for open, then go to Step 8.
		No	Go to next step.
4	**INSPECT FAN CONTROL MODULE SIGNAL CIRCUIT FOR SHORT TO GROUND** • Turn ignition key to OFF. • Check continuity between fan control module terminal B and body ground. • Is there continuity?	Yes	Repair or replace harness for open, then go to Step 8.
		No	Go to next step.
5	**INSPECT PCM CONNECTOR FOR POOR CONNECTION** • Check for poor connection (damaged/pulled-out pins, corrosion, etc.). • Is there malfunction?	Yes	Repair or replace terminal, then go to Step 8.
		No	Go to next step.
6	**INSPECT FAN CONTROL MODULE SIGNAL CIRCUIT FOR OPEN CIRCUIT** • Check continuity between fan control module terminal B and PCM terminal 44. • Is there continuity?	Yes	Go to next step.
		No	Repair or replace harness for open, then go to Step 8.
7	**INSPECT FAN CONTROL MODULE** • Perform fan control module inspection. • Is fan control module okay?	Yes	Go to next step.
		No	Replace fan control module, then go to next step.
8	**VERIFY TROUBLESHOOTING OF DTC P0480 COMPLETED** • Make sure to reconnect all disconnected connectors. • Turn ignition key to OFF then start engine. • Is PENDING CODE of same DTC present?	Yes	Replace PCM, then go to next step.
		No	Go to next step.
9	**VERIFY AFTER REPAIR PROCEDURE** • Perform “After Repair Procedure”. (See F4–110 AFTER REPAIR PROCEDURE.) • Is there any DTC present?	Yes	Go to applicable DTC inspection. (See F4–113 DTC TABLE.)
		No	Troubleshooting completed.

End Of Ste

DTC P0500

AME427001087W01

DTC P0500	Vehicle speed sensor (VSS) circuit malfunction
DETECTION CONDITION	• Vehicle speed signal does not input after following conditions are met: — Shift range in except P, N or R range — Load is above **40%** — Engine speed is **2,000 rpm or above** **Diagnostic support note:** • This is a continuous monitor (CCM). • MIL illuminates if PCM detects the above malfunction conditions in two consecutive drive cycles. • PENDING CODE is available if PCM detects the above malfunction condition during first drive cycle. • FREEZE FRAME DATA is available. • DTC is stored in PCM memory.
POSSIBLE CAUSE	• PCM malfunction • Instrument cluster malfunction • ABS HU/CM malfunction • Open circuit between PCM terminal 58 and instrument cluster terminal 2O • Short to ground between PCM terminal 58 and instrument cluster terminal 2O

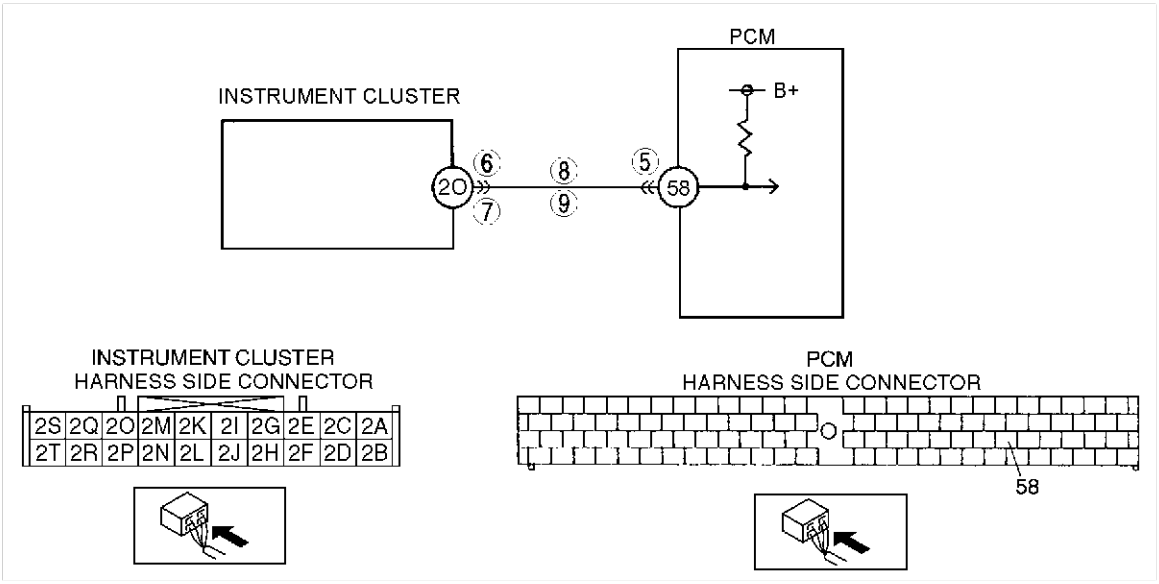

Diagnostic procedure

STEP	INSPECTION		ACTION
1	**VERIFY FREEZE FRAME DATA HAS BEEN RECORDED** • Has FREEZE FRAME PID DATA been recorded?	Yes	Go to next step.
		No	Record FREEZE FRAME PID DATA on repair order, then go to next step.
2	**VERIFY RELATED SERVICE INFORMATION AVAILABILITY** • Check for related Service Information availability. • Is any related Service Information available?	Yes	Perform repair or diagnosis according to available Service Information. • If vehicle is not repaired, go to next step.
		No	Go to next step.
3	**VERIFY CURRENT INPUT SIGNAL STATUS-IS CONCERN INTERMITTENT OR CONSTANT** • Connect WDS or equivalent to DLC-2. • Start engine. • Access VSS PID using WDS or equivalent. — Vehicle speed **20 km/h {12.4 mph}: 20km/h {12.4 mph}** — Vehicle speed **40 km/h {24.8 mph}: 40km/h {24.8 mph}** • Are PID readings within specification?	Yes	Go to intermittent concern troubleshooting procedure. (See F4–247 INTERMITTENT CONCERN TROUBLESHOOTING.)
		No	Go to next step.

STEP	INSPECTION		ACTION
4	**CHECK INPUT/OUTPUT CHECK MODE** • Turn ignition key to ON (engine OFF). • Is instrument cluster DTCs 10 or 12 detected? (See T–37 INSTRUMENT CLUSTER INPUT/ OUTPUT CHECK MODE.).	Yes	DTC 10 and/or 12 displayed: Inspect instrument cluster. (See T–37 INSTRUMENT CLUSTER INPUT/OUTPUT CHECK MODE.)
		No	Go to next step.
5	**INSPECT PCM CONNECTOR FOR POOR CONNECTION** • Turn ignition key to OFF. • Disconnect PCM connector. • Check for poor connection (damaged/pulled-out terminals, corrosion, etc.). • Are terminals okay?	Yes	Go to next step.
		No	Repair or replace pin or connector, then go to Step 10.
6	**INSPECT INSTRUMENT CLUSTER CONNECTOR FOR POOR CONNECTION** • Turn ignition key to OFF. • Disconnect instrument cluster connector. • Check for poor connections (damaged/pulled-out terminals, corrosion, etc.). • Are terminals okay?	Yes	Go to next step.
		No	Repair or replace terminals, then go to Step 10.
7	**INSPECT VOLTAGE** • Connect PCM connector. • Turn ignition key to ON (engine OFF). • Measure voltage at instrument cluster terminal 2O (harness-side). • Is there **5 V** at instrument cluster terminal 2O (harness-side)?	Yes	Replace instrument cluster, then go to Step 10.
		No	Go to next step.
8	**INSPECT INSTRUMENT CLUSTER CIRCUIT FOR OPEN CIRCUIT** • Turn ignition key to OFF. • Disconnect PCM connector. • Turn ignition key to ON (engine OFF). • Check for continuity between instrument cluster terminal 2O (harness-side) and PCM terminal 58. • Is there continuity?	Yes	Go to next step.
		No	Repair or replace harness, then go to Step 10.
9	**INSPECT INSTRUMENT CLUSTER CIRCUIT FOR SHORT TO GROUND** • Check for continuity between instrument cluster terminal 2O (harness-side) and body ground. • Is there continuity?	Yes	Repair or replace harness, then go to next step.
		No	Replace instrument cluster, then go to next step.
10	**VERIFY TROUBLESHOOTING OF DTC P0500 COMPLETED** • Make sure to reconnect all disconnected connectors. • Clear DTC from memory using WDS or equivalent. • Warm up engine. • Drive vehicle under following conditions for **16 s**. — Engine speed: **2,000 rpm or above** — Gear: not in P or N range. — Load: **40% or above** • Is PENDING CODE of same DTC present?	Yes	Replace PCM, then go to next step. (See F4–90 PCM REMOVAL/INSTALLATION.)
		No	Go to next step.
11	**VERIFY AFTER REPAIR PROCEDURE** • Perform “After Repair Procedure”. (See F4–110 AFTER REPAIR PROCEDURE.) • Is there any DTC present?	Yes	Go to applicable DTC inspection.
		No	Troubleshooting completed.

End Of Sta

DTC P0505

AME427001087W02

DTC P0505	IAC valve circuit malfunction
DETECTION CONDITION	• The PCM monitors the IAC valve circuit current while IAC duty is **above 18%**. If the PCM detected IAC valve circuit current **below 100 mA (25 °C {77 °F})** or **above 4.5 A (25 °C {77 °F})** for **1 s**, the PCM determines that the IAC valve circuit has malfunction. **Diagnostic support note** • This is a continuous monitor (CCM). • MIL illuminates if PCM detects the above malfunction condition during first drive cycle. • PENDING CODE is not available. • FREEZE FRAME DATA is available. • DTC is stored in the PCM memory.
POSSIBLE CAUSE	• IAC valve circuit malfunction • Short to ground between IAC valve terminal A and PCM terminal 54 • Open circuit between IAC valve terminal A and PCM terminal 54 • Short to ground between IAC valve terminal B and PCM terminal 83 • Short to power between IAC valve terminal B and PCM terminal 83 • Open circuit between IAC valve terminal B and PCM terminal 83 • Poor connection of IAC valve connector or PCM connector • PCM malfunction

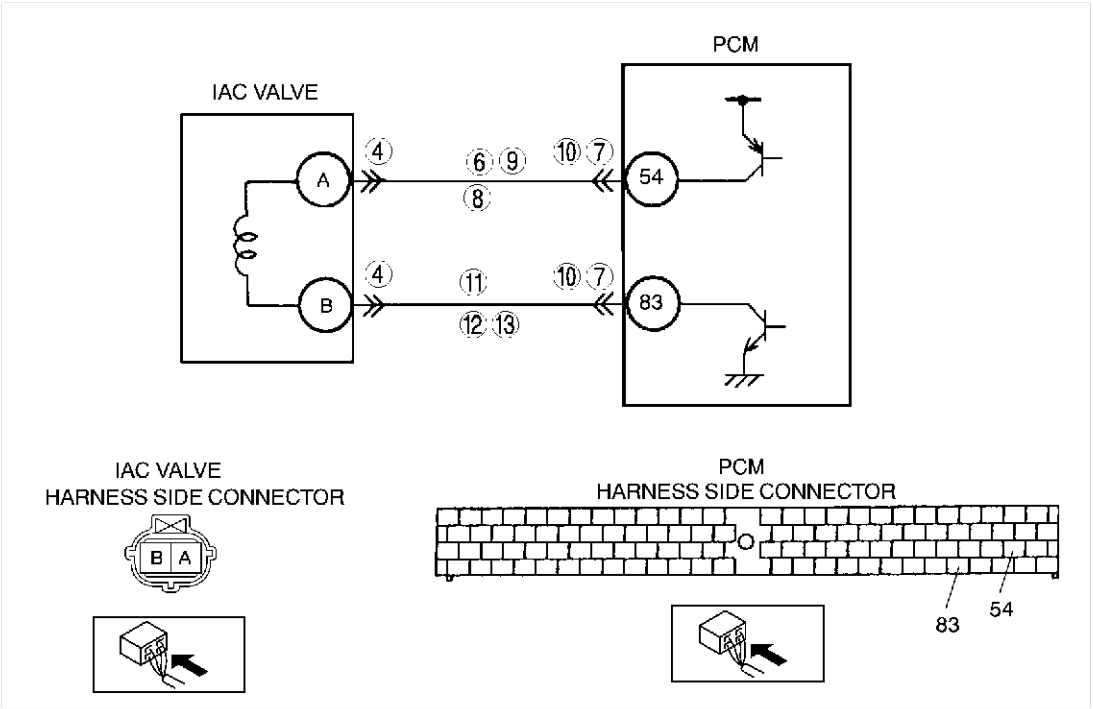

Diagnostic procedure

STEP	INSPECTION		ACTION
1	**VERIFY FREEZE FRAME DATA HAS BEEN RECORDED** • Has FREEZE FRAME DATA been recorded?	Yes	Go to next step.
		No	Record FREEZE FRAME DATA on repair order, then go to next step.
2	**VERIFY RELATED SERVICE INFORMATION AVAILABILITY** • Check for related Service Information availability. • Is any related Service Information available?	Yes	Perform repair or diagnosis according to available Service Information. • If vehicle is not repaired, go to next step.
		No	Go to next step.
3	**CLASSIFY INTERMITTENT CONCERN OR CONTINUOUS CONCERN** • Clear DTC using WDS or equivalent. • Start engine and warm it up completely. • Is same DTC detected?	Yes	Go to next step.
		No	Go to intermittent concern. (See F4–247 INTERMITTENT CONCERN TROUBLESHOOTING.)

STEP	INSPECTION		ACTION
4	**INSPECT IAC VALVE CONNECTOR FOR POOR CONNECTION** • Turn ignition key to OFF. • Disconnect IAC valve connector. • Check for poor connection (damaged, pulled-out terminals, corrosion, etc.). • Are there any malfunctions?	Yes	Repair or replace terminal, then go to Step 14.
		No	Go to next step.
5	**INSPECT IAC VALVE** • Perform IAC valve inspection. (See F4–62 IDLE AIR CONTROL (IAC) VALVE INSPECTION) • Is IAC valve okay?	Yes	Go to next step.
		No	Replace IAC valve, then go to Step 14.
6	**CLASSIFY MALFUNCTION AT POWER SUPPLY CIRCUIT OR CONTROL CIRCUIT** • Turn ignition key to ON (Engine OFF). • Measure voltage between IAC valve terminal A (harness-side) and body ground. • Is there voltage **B+**?	Yes	Malfunction at control circuit. Go to step 10.
		No	Malfunction at power supply circuit. Go to next step.
7	**INSPECT PCM CONNECTOR FOR POOR CONNECTION** • Turn ignition key to OFF. • Disconnect PCM connector. • Check for poor connection (damaged, pulled-out terminals, corrosion, etc.). • Are there any malfunctions?	Yes	Repair terminal, then go to Step 14.
		No	Go to next step.
8	**INSPECT POWER CIRCUIT FOR SHORT TO GROUND** • Turn ignition key to OFF. • Check continuity between IAC valve terminal A (harness-side) and body ground. • Is there any continuity?	Yes	Repair or replace harness for short to ground, then go to Step 14.
		No	Go to next step.
9	**INSPECT POWER CIRCUIT FOR OPEN CIRCUIT** • Turn ignition key to OFF • Disconnect PCM connector. • Check continuity between IAC valve terminal A (harness-side) and PCM terminal 54. • Is there any continuity?	Yes	Repair or replace harness for open circuit, then go to Step 14.
		No	Go to step 14.
10	**INSPECT PCM CONNECTOR FOR POOR CONNECTION** • Turn ignition key to OFF • Disconnect PCM connector. • Check for poor connection (damaged, pulled-out terminals, corrosion, etc.). • Are there any malfunctions?	Yes	Repair terminal, then go to Step 14.
		No	Go to next step.
11	**INSPECT CONTROL CIRCUIT FOR SHORT TO POWER** • Turn ignition key to ON (Engine OFF). • Measure voltage between IAC valve terminal B (harness-side) and body ground. • Is there voltage **B+**?	Yes	Repair or replace harness for short to power, then go to Step 14.
		No	Go to next step.
12	**INSPECT CONTROL CIRCUIT FOR SHORT TO GROUND** • Turn ignition key to OFF. • Check continuity between IAC valve terminal B (harness-side) and body ground. • Is there any continuity?	Yes	Repair or replace harness for short to ground, then go to Step 14.
		No	Go to next step.
13	**INSPECT CONTROL CIRCUIT MALFUNCTION FOR OPEN CIRCUIT** • Disconnect PCM connector. • Check continuity between IAC valve terminal B (harness-side) and PCM terminal 83. • Is there any continuity?	Yes	Repair or replace harness for open, then go to next step.
		No	Go to next step.
14	**VERIFY TROUBLESHOOTING OF DTC P0505 COMPLETED** • Make sure to reconnect all disconnected connectors. • Clear DTC using WDS or equivalent. • Start engine and warm it up completely. • Is same DTC present?	Yes	Replace PCM, then go to next step.
		No	Go to next step.
15	**VERIFY AFTER REPAIR PROCEDURE** • Perform “After Repair Procedure”. (See F4–110 AFTER REPAIR PROCEDURE.) • Is there any DTC present?	Yes	Go to applicable DTC inspection. (See F4–113 DTC TABLE.)
		No	Troubleshooting completed.

DTC P0506

AME427001087W03

DTC P0506	Idle control system RPM lower than expected
DETECTION CONDITION	• Actual idle speed is lower than expected by **100 rpm** for **14 s**, when brake pedal is depressed (brake switch is ON) and steering wheel is held straight ahead (power steering pressure switch is OFF). **Note** • If atmospheric pressure is **below 72.3 kPa {542 mmHg, 21.3 inHg}** or intake air temperature is **below -10 °C {14 °F}**, PCM cancels diagnosis of P0506. **Diagnostic support note** • This is a continuous monitor (CCM). • MIL illuminates if PCM detects the above malfunction condition in two consecutive drive cycles. • PENDING CODE is available if PCM detects the above malfunction condition during first drive cycle. • FREEZE FRAME DATA is available. • DTC is stored in PCM memory.
POSSIBLE CAUSE	• IAC valve malfunction • Air cleaner element clogged • Air intake passage clogged • A/C relay control circuit malfunction • Generator malfunction • Purge solenoid valve malfunction • Low engine compression (Over capacity of blow-by gas) • PCM malfunction

Diagnostic procedure

STEP	INSPECTION		ACTION
1	**VERIFY FREEZE FRAME DATA HAS BEEN RECORDED** • Has FREEZE FRAME DATA been recorded?	Yes	Go to next step.
		No	Record FREEZE FRAME DATA on repair order, then go to next step.
2	**VERIFY RELATED SERVICE INFORMATION AVAILABILITY** • Check for related Service Information availability. • Is any related Service Information available?	Yes	Perform repair or diagnosis according to available Service Information. • If vehicle is not repaired, go to next step.
		No	Go to next step.
3	**VERIFY RELATED PENDING OR STORED DTCS** • Turn ignition key to OFF, then ON (Engine OFF). • Verify pending code or stored DTCs using WDS or equivalent. • Is other DTC present?	Yes	Repair applicable DTCs. (See F4–113 DTC TABLE.)
		No	Go to next step.
4	**INSPECT IAC VALVE MALFUNCTION** • Perform IAC valve inspection. (See F4–62 IDLE AIR CONTROL (IAC) VALVE INSPECTION.) • Is IAC valve okay?	Yes	Go to next step.
		No	Replace IAC valve, then go to Step 11.
5	**INSPECT A/C MAGNET CLUTCH OPERATION** • Turn blower motor switch off. • Is magnet clutch still on?	Yes	Refer to “A/C is always on or A/C compressor runs continuously.” of ENGINE SYMPTOM TROUBLESHOOTING, then go to Step 11. (See F4–289 NO.24 A/C ALWAYS ON/A/C COMPRESSOR RUNS CONTINUOUSLY.)
		No	Go to next step.
6	**INSPECT PURGE SOLENOID VALVE MALFUNCTION** • Perform purge solenoid valve inspection. (See F4–85 PURGE SOLENOID VALVE INSPECTION.) • Is purge solenoid valve okay?	Yes	Go to next step.
		No	Replace purge solenoid valve, then go to Step 11.
7	**INSPECT AIR CLEANER ELEMENT** • Remove air cleaner element with engine running. • Is engine speed increased?	Yes	Replace air cleaner element, then go to Step 11.
		No	Go to next step.
8	**INSPECT THROTTLE BODY PASSAGE** • Is throttle body clogged?	Yes	Clean or replace throttle body passage, then go to Step 11.
		No	Go to next step.

STEP	INSPECTION		ACTION
9	**INSPECT ENGINE COMPRESSION** • Inspect engine compression. • Is engine compression okay?	Yes	Go to next step.
		No	Overhaul engine, then go to Step 11.
10	**INSPECT GENERATOR** • Perform generator inspection. (See G–13 GENERATOR INSPECTION.) • Is generator okay?	Yes	Go to next step.
		No	Repair or replace related part, then go to next step.
11	**VERIFY TROUBLESHOOTING OF DTC P0506 COMPLETED** • Make sure to reconnect all disconnected connectors. • Start engine. • Clear DTC from PCM memory using WDS or equivalent. • Depress brake pedal for **14.1 s or above**. • Is PENDING CODE of same DTC present?	Yes	Replace PCM, then go to next step.
		No	Go to next step.
12	**VERIFY AFTER REPAIR PROCEDURE** • Perform “After Repair Procedure”. (See F4–110 AFTER REPAIR PROCEDURE.) • Is there any DTC present?	Yes	Go to applicable DTC inspection. (See F4–113 DTC TABLE.)
		No	Troubleshooting completed.

End Of Ste

DTC P0507

AME427001087W04

F4

DTC P0507	Idle control system RPM higher than expected
DETECTION CONDITION	• Actual idle speed is higher than expected by **200 rpm** for **14 s**, when brake pedal is depressed (brake switch is ON) and steering wheel is held straight ahead (power steering pressure switch is OFF). **Note** • If atmospheric pressure is **below 72.3 kPa {542 mmHg, 21.3 inHg}** or intake air temperature is **below -10 °C {14 °F}**, PCM cancels diagnosis of P0507. **Diagnostic support note** • This is a continuous monitor (CCM). • MIL illuminates if PCM detects the above malfunction condition in two consecutive drive cycles. • PENDING CODE is available if PCM detects the above malfunction condition during first drive cycle. • FREEZE FRAME DATA is available. • DTC is stored in PCM memory.
POSSIBLE CAUSE	• IAC valve malfunction • Accelerator cable misadjusting • Actuator cable misadjusting • Throttle valve malfunction • Vacuum hose misconnection • PCM malfunction

Diagnostic procedure

STEP	INSPECTION		ACTION
1	**VERIFY FREEZE FRAME DATA HAS BEEN RECORDED** • Has FREEZE FRAME DATA been recorded?	Yes	Go to next step.
		No	Record FREEZE FRAME DATA on repair order, then go to next step.
2	**VERIFY RELATED SERVICE INFORMATION AVAILABILITY** • Check for related Service Information availability. • Is any related Service Information available?	Yes	Perform repair or diagnosis according to available Service Information. • If vehicle is not repaired, go to next step.
		No	Go to next step.
3	**VERIFY RELATED PENDING OR STORED DTCS** • Turn ignition key to OFF, then ON (Engine OFF). • Verify pending code or stored DTCs using WDS or equivalent. • Is other DTC present?	Yes	Repair applicable DTCs. (See F4–113 DTC TABLE.)
		No	Go to next step.

STEP	INSPECTION		ACTION
4	**INSPECT IAC VALVE MALFUNCTION** • Perform IAC valve inspection. (See F4–62 IDLE AIR CONTROL (IAC) VALVE INSPECTION.) • Is IAC valve okay?	Yes	Go to next step.
		No	Replace IAC valve, then go to Step 9.
5	**INSPECT ACCELERATOR CABLE FREE PLAY** • Turn ignition key to OFF. • Is accelerator cable free play okay? (See F4–64 ACCELERATOR CABLE INSPECTION.)	Yes	Go to next step.
		No	Adjust accelerator cable free play, then go to Step 9. (See F4–64 Free Play Inspection.)
6	**INSPECT ACTUATOR CABLE FREE PLAY** • Is actuator cable adjustments okay?	Yes	Go to next step.
		No	Adjust actuator cable free play, then go to Step 9.
7	**INSPECT VACUUM HOSE CONNECTION** • Are vacuum hoses connecting accurately? (See F4–59 VACUUM HOSE ROUTING DIAGRAM.)	Yes	Go to next step.
		No	Reconnect vacuum hose accurately, then go to step 9.
8	**VISUAL INSPECT THROTTLE VALVE** • Remove throttle body. • Is throttle valve fully closed?	Yes	Go to next step.
		No	Clean or replace throttle body, then go to next step.
9	**VERIFY TROUBLESHOOTING OF DTC P0507 COMPLETED** • Make sure to reconnect all disconnected connectors. • Start engine. • Clear DTC from PCM memory using WDS or equivalent. • Depress brake pedal for **14.1 s or above**. • Is PENDING CODE of same DTC present?	Yes	Replace PCM, then go to next step.
		No	Go to next step.
10	**VERIFY AFTER REPAIR PROCEDURE** • Perform “After Repair Procedure”. (See F4–110 AFTER REPAIR PROCEDURE.) • Is there any DTC present?	Yes	Go to applicable DTC inspection. (See F4–113 DTC TABLE.)
		No	Troubleshooting completed.

End Of Sie

DTC P0550

AME427001087W05

DTC P0550	PSP switch circuit malfunction
DETECTION CONDITION	• The PCM monitors PSP switch signal at PCM terminal 31. If input voltage is low voltage (switch stays on) for **1 min.** when the VSS is **above 60.1 km/h {37.3 mph}** and ECT is **above 60 °C {140 °F}**, the PCM determines that PSP switch circuit has malfunction. **Diagnostic support note** • This is a continuous monitor (CCM). • MIL illuminates if PCM detects the above malfunction condition in two consecutive drive cycles. • PENDING CODE is available if PCM detects the above malfunction condition during first drive cycle. • FREEZE FRAME DATA is available. • DTC is stored in PCM memory.
POSSIBLE CAUSE	• PSP switch malfunction • Short to ground between PSP switch terminal and PCM terminal 31 • PCM malfunction

DTC P0550	PSP switch circuit malfunction

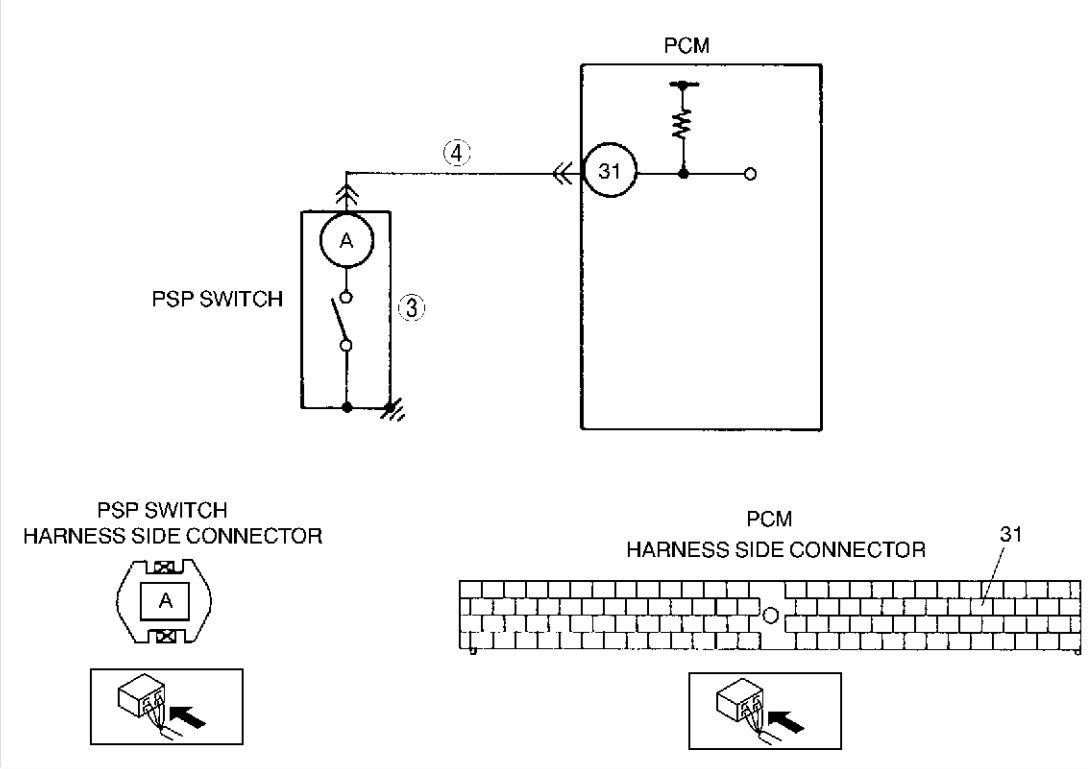

Diagnostic procedure

STEP	INSPECTION		ACTION
1	**VERIFY FREEZE FRAME DATA HAS BEEN RECORDED** • Has FREEZE FRAME DATA been recorded?	Yes	Go to next step.
		No	Record FREEZE FRAME DATA on repair order, then go to next step.
2	**VERIFY RELATED SERVICE INFORMATION AVAILABILITY** • Check for related Service Information availability. • Is any related Service Information available?	Yes	Perform repair or diagnosis according to available Service Information. • If vehicle is not repaired, go to next step.
		No	Go to next step.
3	**INSPECT PSP SWITCH** • Perform PSP switch inspection. (See F4–107 POWER STEERING PRESSURE (PSP) SWITCH INSPECTION.) • Is PSP switch okay?	Yes	Go to next step.
		No	Replace PSP switch, then go to Step 5.
4	**INSPECT PSP SWITCH SIGNAL CIRCUIT FOR SHORT TO GROUND** • Disconnect PCM connector. • Check continuity between PSP switch terminal (harness-side) and body ground. • Is there any continuity?	Yes	Repair or replace harness for short to ground, then go to next step.
		No	Go to next step.
5	**VERIFY TROUBLESHOOTING OF DTC P0550 COMPLETED** • Make sure to reconnect all disconnected connectors. • Start engine. • Clear DTC from PCM memory using WDS or equivalent. • Drive vehicle **above 60.1 km/h {37.3 mph}** for **1 min**. • Verify that ECT PID **above 60 °C {140 °F}** using WDS or equivalent. • Is PENDING CODE of same DTC present?	Yes	Replace PCM, then go to next step.
		No	Go to next step.

STEP	INSPECTION		ACTION
6	**VERIFY AFTER REPAIR PROCEDURE** • Perform “After Repair Procedure”. (See F4–110 AFTER REPAIR PROCEDURE.) • Is there any DTC present?	Yes	Go to applicable DTC inspection. (See F4–113 DTC TABLE.)
		No	Troubleshooting completed.

End Of Ste

DTC P0660

AME427001088W01

DTC P0660	IMCC circuit malfunction
DETECTION CONDITION	• PCM monitors input voltages from IMCC actuator while engine running. If voltage at PCM terminal 28 remains low or high, PCM determines that IMCC actuator circuit has a malfunction. **Diagnostic support note** • This is an intermittent monitor (Other). • MIL does not come on. • PENDING CODE is available if PCM detects the above malfunction condition. • FREEZE FRAME DATA is not available. • DTC is not stored in the PCM memory.
POSSIBLE CAUSE	• IMCC actuator malfunction • Connector or terminal malfunction • Short to ground in wiring between IMCC actuator terminal B and PCM terminal 28 • Open circuit in wiring between main relay terminal D and IMCC actuator terminal A • Open circuit in wiring between IMCC actuator terminal B and PCM terminal 28 • Short to power circuit between IMCC actuator terminal B and PCM terminal 28 • PCM malfunction

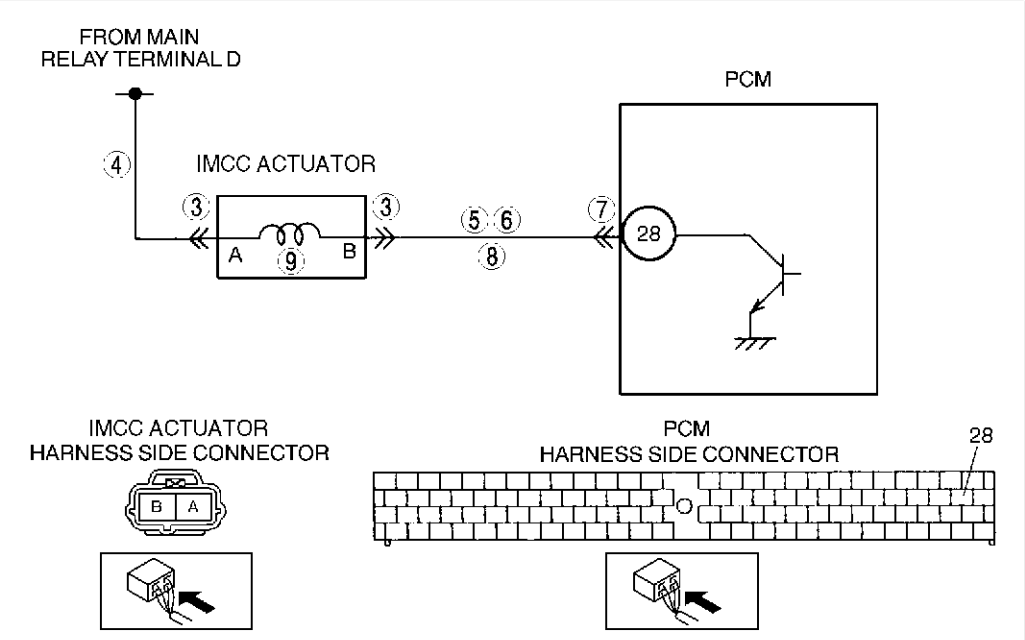

Diagnostic procedure

STEP	INSPECTION		ACTION
1	**VERIFY RELATED SERVICE INFORMATION AVAILABILITY** • Check for related Service Information availability. • Is any related Service Information available?	Yes	Perform repair or diagnosis according to available Service Information. • If vehicle is not repaired, go to next step.
		No	Go to next step.
2	**CLASSIFY INTERMITTENT CONCERN OR CONTINUOUS CONCERN** • Start engine. • Increase engine speed **above 3,800 rpm**. • Is PENDING CODE same DTC present?	Yes	Go to next step.
		No	Intermittent concern exists. Go to INTERMITTENT CONCERN TROUBLESHOOTING procedure. (See F4–247 INTERMITTENT CONCERN TROUBLESHOOTING.)

STEP	INSPECTION		ACTION
3	**INSPECT IMCC ACTUATOR CONNECTOR FOR POOR CONNECTION** • Turn ignition key to OFF. • Disconnect IMCC actuator connector. • Check for poor connection (damaged/pulled-out pins, corrosion, etc.). • Is there malfunction?	Yes	Repair or replace terminal, then go to Step 10.
		No	Go to next step.
4	**INSPECT IMCC ACTUATOR POWER SUPPLY CIRCUIT FOR OPEN CIRCUIT** • Turn ignition key to ON (Engine OFF). • Measure voltage between IMCC actuator terminal A (harness-side) and body ground. • Is voltage **B+**?	Yes	Go to next step.
		No	Repair or replace harness for open, then go to Step 10.
5	**INSPECT IMCC ACTUATOR CONTROL CIRCUIT FOR SHORT TO POWER** • Turn ignition key to OFF. • Measure voltage between IMCC actuator terminal B (harness-side) and body ground. • Is voltage **B+**?	Yes	Repair or replace harness for short to power, then go to Step 10.
		No	Go to next step.
6	**INSPECT IMCC ACTUATOR CONTROL CIRCUIT FOR SHORT TO GROUND** • Check continuity between IMCC actuator terminal B (harness-side) and body ground. • Is there continuity?	Yes	Repair or replace harness for short to ground, then go to Step 10.
		No	Go to next step.
7	**INSPECT PCM CONNECTOR FOR POOR CONNECTION** • Turn ignition key to OFF. • Disconnect PCM connector. • Check for poor connection at terminal 28. (damaged/pulled-out pins, corrosion, etc.). • Is there malfunction?	Yes	Repair terminal, then go to Step 10.
		No	Go to next step.
8	**INSPECT IMCC ACTUATOR CONTROL CIRCUIT FOR OPEN CIRCUIT** • Turn ignition key to OFF. • Disconnect PCM connector. • Check for continuity between IMCC actuator terminal B (harness-side) and PCM terminal 28. • Is there continuity?	Yes	Go to next step.
		No	Repair or replace harness for open, then go to Step 10.
9	**INSPECT IMCC ACTUATOR MALFUNCTION** • Perform IMCC actuator inspection. (See F4–63 INTAKE MANIFOLD COMMUNICATION CONTROL (IMCC) ACTUATOR INSPECTION) • Is IMCC actuator okay?	Yes	Go to next step.
		No	Replace IMCC actuator, then go to next step.
10	**VERIFY TROUBLESHOOTING OF DTC P0660 COMPLETED** • Make sure to reconnect all disconnected connectors. • Turn ignition key to ON (Engine OFF). • Clear DTC from PCM memory using WDS or equivalent. • Start engine. • Increase engine speed **above 3,800 rpm**. • Is PENDING CODE of same DTC present?	Yes	Replace PCM, then go to next step.
		No	Go to next step.
11	**VERIFY AFTER REPAIR PROCEDURE** • Perform “After Repair Procedure”. (See F4–110 AFTER REPAIR PROCEDURE.) • Is there any DTC present?	Yes	Go to applicable DTC inspection. (See F4–113 DTC TABLE.)
		No	Troubleshooting completed.

End Of Sie

DTC P0703

AME427001089W01

DTC P0703	Brake switch input malfunction
DETECTION CONDITION	• The PCM monitors changes in input voltage from the brake switch. If PCM does not detect PCM terminal 92 voltage changes while alternately accelerating and decelerating **10 times**, it determines that brake switch circuit has malfunction. **Diagnostic support note** • This is a continuous monitor (CCM). • MIL illuminates if PCM detects the above malfunction condition in two consecutive drive cycles. • PENDING CODE is available if PCM detects the above malfunction condition during first drive cycle. • FREEZE FRAME DATA is available. • DTC is stored in PCM memory.
POSSIBLE CAUSE	• Brake switch malfunction • Open harness between brake switch terminal and PCM connector terminal 92. • PCM malfunction

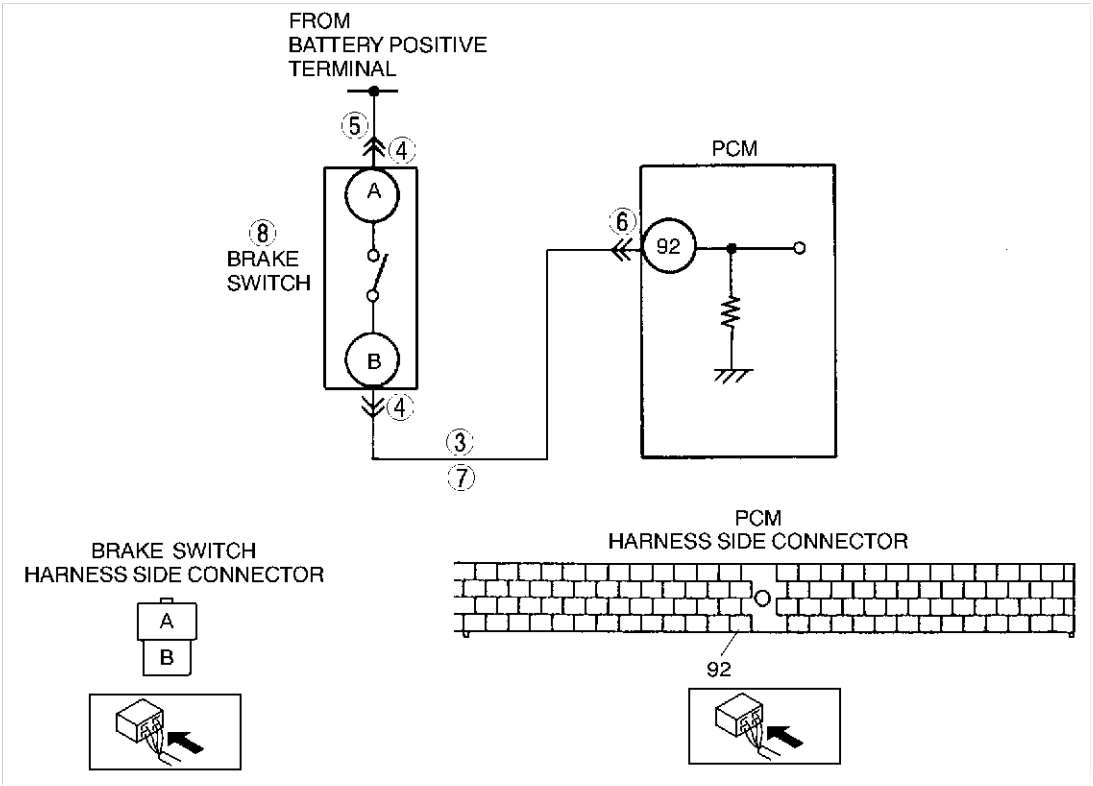

Diagnostic procedure

STEP	INSPECTION		ACTION
1	**VERIFY FREEZE FRAME DATA HAS BEEN RECORDED** • Has FREEZE FRAME DATA been recorded?	Yes	Go to next step.
		No	Record FREEZE FRAME DATA on repair order, then go to next step.
2	**VERIFY RELATED SERVICE INFORMATION AVAILABILITY** • Check for related Service Information availability. • Is any related Service Information available?	Yes	Perform repair or diagnosis according to available Service Information. • If vehicle is not repaired, go to next step.
		No	Go to next step.
3	**INSPECT BRAKE SWITCH SIGNAL CIRCUIT FOR SHORT TO POWER** • Measure voltage between brake switch connector terminal B and body ground. • Is voltage **B+**?	Yes	Repair or replace harness for short to power, then go to Step 9.
		No	Go to Next step.
4	**INSPECT BRAKE SWITCH CONNECTOR FOR POOR CONNECTION** • Turn ignition switch to OFF. • Disconnect brake switch connector. • Check for poor connection (damaged/pulled-out terminals, corrosion, etc.). • Is there malfunction?	Yes	Repair or replace terminal, then go to Step 9.
		No	Go to next step.

STEP	INSPECTION		ACTION
5	**INSPECT BRAKE SWITCH POWER CIRCUIT FOR OPEN CIRCUIT** • Measure voltage between brake switch connector terminal A and body ground. • Is voltage **B+**?	Yes	Go to next step.
		No	Repair or replace brake switch power circuit for open, then Go to Step 9.
6	**INSPECT PCM CONNECTOR FOR POOR CONNECTION** • Turn ignition switch to OFF. • Disconnect PCM connector. • Check for poor connection (damaged/pulled-out terminals, corrosion, etc.). • Is there any malfunction?	Yes	Repair terminal, then go to Step 9.
		No	Go to next step.
7	**INSPECT BRAKE SWITCH SIGNAL CIRCUIT FOR OPEN CIRCUIT** • Disconnect PCM connector. • Connect brake switch connector. • Turn ignition switch to ON (engine OFF). • Depress brake pedal and measure voltage between PCM terminal 92 and body ground. • Is voltage **B+**?	Yes	Go to next step.
		No	Repair or replace harness for open, then go to Step 9.
8	**INSPECT BRAKE SWITCH** • Perform brake switch inspection. • Is brake switch okay?	Yes	Go to next step.
		No	Replace brake switch, then go to next step.
9	**VERIFY TROUBLESHOOTING OF DTC P0703 COMPLETED** • Make sure to reconnect all disconnected connectors. • Clear DTC from memory using WDS or equivalent. • Drive vehicle **30 km/h {18.6 mph} or above**. • Depress and release brake pedal **above 10 times** while driving vehicle. • Is PENDING CODE of same DTC present?	Yes	Replace PCM, then go to next step.
		No	Go to next step.
10	**VERIFY AFTER REPAIR PROCEDURE** • Perform “After Repair Procedure”. (See F4–110 AFTER REPAIR PROCEDURE.) • Is there any DTC present?	Yes	Go to applicable DTC inspection. (See F4–113 DTC TABLE.)
		No	Troubleshooting completed.

End Of Ste

DTC P1309

AME427001083W01

DTC P1309	PCM IC for misfire detection
DETECTION CONDITION	• When IC which is detecting misfire sends an extraordinary signal to PCM, the PCM determine that IC has malfunction.
POSSIBLE CAUSE	• IC which is detecting misfire malfunction

Diagnostic procedure

STEP	INSPECTION		ACTION
1	**VERIFY RELATED SERVICE INFORMATION AVAILABILITY** • Check for related Service Information availability. • Is any related Service Information available?	Yes	Perform repair or diagnosis according to available Service Information. • If vehicle is not repaired, go to next step.
		No	Go to next step.
2	**VERIFY DTC P1309 DETECTED AGAIN** • Clear DTC from memory using WDS or equivalent. • Turn ignition key to OFF, then start engine. • Is same DTC present?	Yes	Replace PCM, then go to next step.
		No	Go to next step.
3	**VERIFY AFTER REPAIR PROCEDURE** • Perform “After Repair Procedure”. (See F4–110 AFTER REPAIR PROCEDURE.) • Is there any DTC present?	Yes	Go to applicable DTC inspection. (See F4–113 DTC TABLE.)
		No	Troubleshooting completed.

End Of Ste

DTC P1562

AME427001083W02

DTC P1562	PCM +BB (back-up battery) voltage low
DETECTION CONDITION	• The PCM monitors the voltage of back-up battery positive terminal at PCM terminal 55. If the PCM detected battery positive terminal voltage **below 2.5 V** for **2 s**, the PCM determines that the backup voltage circuit has malfunction. **Diagnostic support note** • This is a continuous monitor (CCM). • MIL illuminates if PCM detects the above malfunction condition during first drive cycle. • PENDING CODE is available if PCM detects the above malfunction condition during first drive cycle. • FREEZE FRAME DATA is available. • DTC is stored in the PCM memory.
POSSIBLE CAUSE	• Meltdown ROOM fuse. • Open circuit in wiring between battery positive terminal and PCM terminal 55 • Poor connection of PCM connector. • PCM malfunction

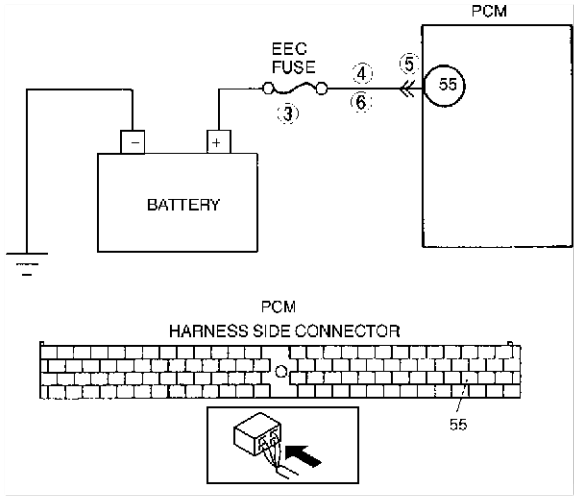

Diagnostic procedure

STEP	INSPECTION		ACTION
1	**VERIFY FREEZE FRAME DATA HAS BEEN RECORDED** • Has FREEZE FRAME DATA been recorded?	Yes	Go to next step.
		No	Record FREEZE FRAME DATA on repair order, then go to next step.

STEP	INSPECTION		ACTION
2	**VERIFY RELATED SERVICE INFORMATION AVAILABILITY** • Check for related Service Information availability. • Is any related Service Information available?	Yes	Perform repair or diagnosis according to available Service Information. • If vehicle is not repaired, go to next step.
		No	Go to next step.
3	**INSPECT ROOM FUSE** • Turn ignition key to OFF. • Inspect EEC fuse for failure and proper. • Is it okay?	Yes	Go to step 5.
		No	• If EEC fuse has been melt down, then go to next step. • If EEC fuse is not installed correctly, install it correctly then go to Step 7.
4	**INSPECT MONITOR CIRCUIT FOR SHORT TO GROUND** • Disconnect battery cables. • Check continuity between EEC fuse terminal and body ground. • Is there continuity?	Yes	Repair or replace harness for short to ground and install new fuse, then go to Step 7.
		No	Go to step 7.
5	**INSPECT PCM CONNECTOR FOR POOR CONNECTION** • Disconnect PCM connector. • Check for poor connection (damaged, pulled-out terminals, corrosion, etc.). • Are there any malfunctions?	Yes	Repair terminals, then go to Step 7.
		No	Go to next step.
6	**INSPECT MONITOR CIRCUIT FOR OPEN CIRCUIT** • Disconnect battery cables. • Disconnect PCM connector. • Check continuity between EEC fuse terminal and PCM terminal 55. • Is there any continuity?	Yes	Go to next step.
		No	Repair or replace harness for open, then go to next step.
7	**VERIFY TROUBLESHOOTING OF DTC P1562 COMPLETED** • Make sure to reconnect all disconnected connectors. • Turn ignition key to OFF, then start engine. • Is same DTC's pending cord present?	Yes	Replace PCM, then go to next step.
		No	Go to next step.
8	**VERIFY AFTER REPAIR PROCEDURE** • Perform "After Repair Procedure". (See F4–110 AFTER REPAIR PROCEDURE.) • Is there any DTC present?	Yes	Go to applicable DTC inspection. (See F4–113 DTC TABLE.)
		No	Troubleshooting completed.

End Of Sie

DTC P1602

AME427001083W03

DTC P1602	Immobilizer unit-PCM communication error
DETECTION CONDITION	• Command transmission from the PCM to the immobilizer unit exceeds limit. • No response from immobilizer unit.
POSSIBLE CAUSE	• Immobilizer unit malfunction • Coil (immobilizer system) malfunction • Key (transponder) malfunction • PCM malfunction • Open circuit in wiring between immobilizer unit terminal A and PCM terminal 59 • Open circuit in wiring between immobilizer unit terminal C and body ground • Open circuit in wiring between immobilizer unit terminal F and coil terminal A • Open circuit in wiring between immobilizer unit terminal D and coil terminal C • Short to ground circuit in wiring between immobilizer unit terminal A and PCM terminal 59 • Short to ground circuit in wiring between immobilizer unit terminal F and coil terminal A • Short to ground circuit in wiring between immobilizer unit terminal D and coil terminal C

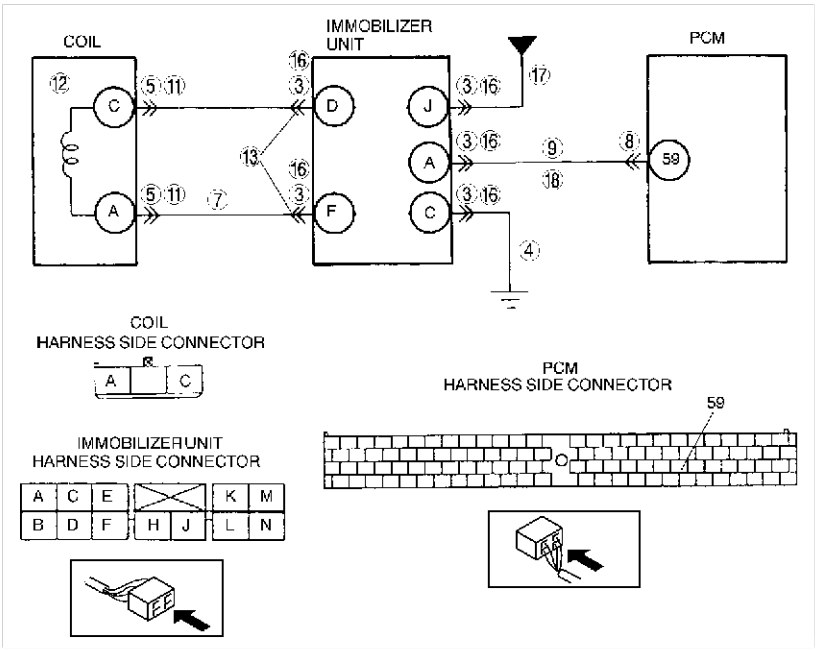

Diagnostic procedure

STEP	INSPECTION		ACTION
1	**VERIFY RELATED SERVICE INFORMATION AVAILABILITY** • Check for related Service Information availability. • Is any related Service Information available?	Yes	Perform repair or diagnosis according to available Service Information. • If vehicle is not repaired, go to next step.
		No	Go to next step.
2	**CLASSIFY NO DTC DETECTED OR SOME DTC DETECTED** • Clear DTC from memory using WDS or equivalent. • Turn ignition key to OFF and ON (Engine OFF). • Has DTC P1624 been detected?	Yes	Go to step 10.
		No	Go to next step.
3	**INSPECT IMMOBILIZER UNIT CONNECTOR FOR POOR CONNECTION** • Turn ignition key to OFF. • Disconnect immobilizer unit connector. • Check for poor connection (damaged, pulled-out terminals, corrosion, etc.). • Is there any malfunction?	Yes	Repair or replace terminals, then go to Step 19.
		No	Go to next step.
4	**INSPECT GROUND CIRCUIT OF IMMOBILIZER UNIT FOR OPEN CIRCUIT** • Measure resistance between immobilizer unit terminal C (harness-side) and body ground. • Is there any continuity?	Yes	Go to next step.
		No	Repair or replace harness for open, then go to Step 19.

STEP	INSPECTION		ACTION
5	**INSPECT COIL TERMINAL** • Disconnect coil connector. • Check for bent terminals. • Is there any malfunction?	Yes	Repair or replace terminals, then go to Step 19.
		No	Go to next step.
6	**INSPECT COIL FOR SHORT CIRCUIT** • Check continuity between coil terminal A (part-side) and body ground. • Is there any continuity?	Yes	Replace coil, then go to Step 19.
		No	Go to next step.
7	**INSPECT COIL CIRCUIT FOR SHORT** • Connect coil connector. • Check continuity between immobilizer unit terminal F (harness-side) and body ground. • Is there any continuity?	Yes	Repair or replace harness for short circuit, then go to Step 19.
		No	Go to next step.
8	**INSPECT PCM CONNECTOR FOR POOR CONNECTION** • Disconnect PCM connector. • Check for poor connection (damaged, pulled-out terminals, corrosion, etc.). • Is there any malfunction?	Yes	Repair or replace harness, then go to Step 19.
		No	Go to next step.
9	**INSPECT COMMUNICATION LINE FOR OPEN** • Disconnect PCM connector. • Measure continuity between immobilizer unit terminal A (harness-side) and PCM terminal 59. • Is there any continuity?	Yes	Go to step 19.
		No	Repair or replace harness for open circuit, then go to Step 19.
10	**CLASSIFY MALFUNCTION BY ANOTHER DETECTED DTCS** • Has DTC P1602 detected?	Yes	Go to Step 14.
		No	Go to next step.
11	**INSPECT COIL CONNECTOR FOR POOR CONNECTION** • Disconnect coil connector. • Check for poor connection (damaged, pulled-out terminals, corrosion, etc.). • Are there any malfunctions?	Yes	Repair or replace harness, then go to Step 19.
		No	Go to next step.
12	**INSPECT COIL FOR OPEN CIRCUIT** • Disconnect coil connector. • Measure resistance between coil terminals (part-side). • Is there any continuity?	Yes	Go to next step.
		No	Replace coil, then go to Step 19.
13	**INSPECT COIL CIRCUIT FOR OPEN CIRCUIT** • Connect coil connector. • Measure the resistance between immobilizer connector F and D (harness-side). • Is there any continuity?	Yes	Go to Step 19.
		No	Repair or replace harness for open circuit, then go to Step 19.
14	**CLASSIFY MALFUNCTION BY ANOTHER DETECTED DTC.** • Has immobilizer unit DTC 03 detected?	Yes	Key has not transponder, change to registered key. Then go to Step 19.
		No	Go to next step.
15	**CLASSIFY MALFUNCTION BY ANOTHER DETECTED DTC.** • Has immobilizer unit DTC 01 detected?	Yes	Key that using for ignition is not registered. Reprogram key or using another registered key, then go to next step.
		No	Go to next step.
16	**INSPECT IMMOBILIZER UNIT CONNECTOR FOR POOR CONNECTION** • Turn ignition key to OFF. • Disconnect immobilizer unit connector. • Check for poor connection (damaged, pulled-out terminals, corrosion, etc.). • Are there any malfunctions?	Yes	Repair or replace harness, then go to next step.
		No	Go to next step.
17	**INSPECT IMMOBILIZER UNIT POWER CIRCUIT FOR OPEN CIRCUIT** • Turn ignition key to ON (Engine OFF). • Measure voltage between immobilizer connector J (harness-side) and body ground. • Is there voltage **B+**?	Yes	Go to next step.
		No	Repair or replace harness for open circuit, then go to Step 19.

STEP	INSPECTION		ACTION
18	**INSPECT COMMUNICATION LINE FOR SHORT TO HARNESS** • Measure resistance between immobilizer unit terminal A (harness-side) and body ground. • Is there any continuity?	Yes	Repair or replace harness for short, then go to next step.
		No	Go to next step.
19	**VERIFY TROUBLESHOOTING OF DTC P1602 COMPLETED** • Make sure to reconnect all disconnected connectors. • Clear DTC from memory using WDS or equivalent. • Turn ignition key to OFF, then start engine. • Is same DTC present?	Yes	Replace PCM, then go to next step.
		No	Go to next step.
20	**VERIFY AFTER REPAIR PROCEDURE** • Perform “After Repair Procedure”. (See F4–110 AFTER REPAIR PROCEDURE.) • Is there any DTC present?	Yes	Go to applicable DTC inspection. (See F4–113 DTC TABLE.)
		No	Troubleshooting completed.

End Of Sie

DTC P1603

AME427001083W04

DTC P1603	Code word is not registered in PCM
DETECTION CONDITION	• Code word is not registered in PCM.
POSSIBLE CAUSE	• Immobilizer system reprogram procedure (code word) was not performed after replacing PCM.

Diagnostic procedure

STEP	INSPECTION		ACTION
1	**VERIFY RELATED SERVICE INFORMATION AVAILABILITY** • Check for related Service Information availability. • Is any related Service Information available?	Yes	Perform repair or diagnosis according to available Service Information. • If vehicle is not repaired, go to next step.
		No	Go to next step.
2	**VERIFY DTC P1603 DETECTED AGAIN** • Clear DTC from memory using WDS or equivalent. • Turn ignition key to OFF, then start engine. • Is same DTC present?	Yes	Perform code word reprogram procedure.
		No	Go to next step.
3	**VERIFY TROUBLESHOOTING OF DTC P1603 COMPLETED** • Clear DTC from memory using WDS or equivalent. • Turn ignition key to OFF, then start engine. • Is same DTC present?	Yes	Replace PCM, then go to next step.
		No	Go to next step.
4	**VERIFY AFTER REPAIR PROCEDURE** • Perform “After Repair Procedure”. (See F4–110 AFTER REPAIR PROCEDURE.) • Is there any DTC present?	Yes	Go to applicable DTC inspection. (See F4–113 DTC TABLE.)
		No	Troubleshooting completed.

End Of Sie

DTC P1604

AME427001083W05

DTC P1604	Key ID numbers are not registered in PCM
DETECTION CONDITION	• Key ID numbers are not registered in PCM.
POSSIBLE CAUSE	• Immobilizer system reprogram procedure (key IDs) was not performed after replacing PCM.

Diagnostic procedure

STEP	INSPECTION		ACTION
1	**VERIFY RELATED SERVICE INFORMATION AVAILABILITY** • Check for related Service Information availability. • Is any related Service Information available?	Yes	Perform repair or diagnosis according to available Service Information. • If vehicle is not repaired, go to next step.
		No	Go to next step.
2	**VERIFY DTC P1604 DETECTED AGAIN** • Clear DTC from memory using WDS or equivalent. • Turn ignition key to OFF, then start engine. • Is same DTC present?	Yes	Perform key ID number reprogram procedure.
		No	Go to next step.
3	**VERIFY TROUBLESHOOTING OF DTC P1604 COMPLETED** • Clear DTC from memory using WDS or equivalent. • Turn ignition key to OFF, then start engine. • Is same DTC present?	Yes	Replace PCM, then go to next step.
		No	Go to next step.
4	**VERIFY AFTER REPAIR PROCEDURE** • Perform “After Repair Procedure”. (See F4–110 AFTER REPAIR PROCEDURE.) • Is there any DTC present?	Yes	Go to applicable DTC inspection. (See F4–113 DTC TABLE.)
		No	Troubleshooting completed.

End Of Sie

DTC P1621

AME427001083W06

DTC P1621	Code word does not match after engine cranking
DETECTION CONDITION	• Code word stored in PCM and immobilizer unit does not match
POSSIBLE CAUSE	• Immobilizer system reprogram procedure (code word) was not performed correctly after replacing immobilizer unit or PCM.

Diagnostic procedure

STEP	INSPECTION		ACTION
1	**VERIFY RELATED SERVICE INFORMATION AVAILABILITY** • Check for related Service Information availability. • Is any related Service Information available?	Yes	Perform repair or diagnosis according to available Service Information. • If vehicle is not repaired, go to next step.
		No	Go to next step.
2	**VERIFY DTC P1621 DETECTED AGAIN** • Clear DTC from memory using WDS or equivalent. • Turn ignition key to OFF, then start engine. • Is same DTC present?	Yes	Perform code word reprogram procedure.
		No	Go to next step.
3	**VERIFY TROUBLESHOOTING OF DTC P1621 COMPLETED** • Clear DTC from memory using WDS or equivalent. • Turn ignition key to OFF, then start engine. • Is same DTC present?	Yes	Replace PCM, then go to next step.
		No	Go to next step.
4	**VERIFY AFTER REPAIR PROCEDURE** • Perform “After Repair Procedure”. (See F4–110 AFTER REPAIR PROCEDURE.) • Is there any DTC present?	Yes	Go to applicable DTC inspection. (See F4–113 DTC TABLE.)
		No	Troubleshooting completed.

End Of Sie

DTC P1622

AME427001083W07

DTC P1622	Key ID number does not match
DETECTION CONDITION	• ID number stored in immobilizer unit (IU) and PCM does not match. This DTC is indicated only after immobilizer unit is replaced and reprogramming system.
POSSIBLE CAUSE	• Transformation of key ID number stored in PCM.

Diagnostic procedure

STEP	INSPECTION		ACTION
1	**VERIFY RELATED SERVICE INFORMATION AVAILABILITY** • Check for related Service Information availability. • Is any related Service Information available?	Yes	Perform repair or diagnosis according to available Service Information. • If vehicle is not repaired, go to next step.
		No	Go to next step.
2	**VERIFY DTC P1622 DETECTED AGAIN** • Clear DTC from memory using WDS or equivalent. • Turn ignition key to OFF, then start engine. • Is same DTC present?	Yes	Go to next step.
		No	Go to Step 4.
3	**CHECK ENGINE IS STARTING NORMALLY USING ANOTHER REGISTERED KEY** • Does engine start with another registered key?	Yes	Previous key is defective. Discard it.
		No	Go to next step.
4	**VERIFY TROUBLESHOOTING OF DTC P1622 COMPLETED** • Clear DTC from memory using WDS or equivalent. • Turn ignition key to OFF, then start engine. • Is same DTC present?	Yes	Replace PCM, then go to next step.
		No	Go to next step.
5	**VERIFY AFTER REPAIR PROCEDURE** • Perform “After Repair Procedure”. (See F4–110 AFTER REPAIR PROCEDURE.) • Is there any DTC present?	Yes	Go to applicable DTC inspection. (See F4–113 DTC TABLE.)
		No	Troubleshooting completed.

End Of Ste

DTC P1623

AME427001083W08

DTC P1623	Code word or key ID number read/write error in PCM
DETECTION CONDITION	• PCM internal EEPROM damaged.
POSSIBLE CAUSE	• PCM internal EEPROM damaged.

Diagnostic procedure

STEP	INSPECTION		ACTION
1	**VERIFY RELATED SERVICE INFORMATION AVAILABILITY** • Check for related Service Information availability. • Is any related Service Information available?	Yes	Perform repair or diagnosis according to available Service Information. • If vehicle is not repaired, go to next step.
		No	Go to next step.
2	**VERIFY DTC P1623 DETECTED AGAIN** • Clear DTC from memory using WDS or equivalent. • Turn ignition key to OFF, then start engine. • Is same DTC present?	Yes	Replace PCM, then go to next step.
		No	Go to next step.
3	**VERIFY AFTER REPAIR PROCEDURE** • Perform “After Repair Procedure”. (See F4–110 AFTER REPAIR PROCEDURE.) • Is there any DTC present?	Yes	Go to applicable DTC inspection. (See F4–113 DTC TABLE.)
		No	Troubleshooting completed.

End Of Ste

DTC P1624

AME427001083W09

DTC P1624	Immobilizer system communication counter = 0
DETECTION CONDITION	• PCM detected immobilizer system communication malfunction more than three times
POSSIBLE CAUSE	• Engine was attempted to start more than three times under malfunction. • Code word mismatch

Diagnostic procedure

STEP	INSPECTION		ACTION
1	**VERIFY RELATED SERVICE INFORMATION AVAILABILITY** • Check for related Service Information availability. • Is any related Service Information available?	Yes	Perform repair or diagnosis according to available Service Information. • If vehicle is not repaired, go to next step.
		No	Go to next step.
2	**FOLLOW OTHER DETECTED DTC FIRST** • Turn ignition key to OFF and to START. • Has P1602 been detected?	Yes	Go to DTC P1602 inspection. (See F4–232 DTC P1602.)
		No	Go to next step.
3	**INSPECT IMMOBILIZER UNIT CONNECTOR FOR POOR CONNECTION** • Has P1621 been detected?	Yes	Go to DTC P1621 inspection. (See F4–235 DTC P1621.)
		No	Go to next step.
4	**VERIFY TROUBLESHOOTING OF DTC P1624 COMPLETED** • Make sure to reconnect all disconnected connectors. • Clear DTC from memory using WDS or equivalent. • Turn ignition key to OFF, then start engine. • Is same DTC present?	Yes	Replace PCM, then go to next step.
		No	Go to next step.
5	**VERIFY AFTER REPAIR PROCEDURE** • Perform “After Repair Procedure”. (See F4–110 AFTER REPAIR PROCEDURE.) • Is there any DTC present?	Yes	Go to applicable DTC inspection. (See F4–113 DTC TABLE.)
		No	Troubleshooting completed.

End Of Sta

F4

DTC P1631

AME427001083W10

DTC P1631	Generator output voltage signal no electricity
DETECTION CONDITION	• The PCM monitors the input voltage from the generator. If the PCM detected that the generator output voltage **below 8.5 V** for **5 s** while engine running, the PCM determines that the charging system has malfunction.
POSSIBLE CAUSE	• Open or short to ground circuit between the generator terminal P and the PCM terminal 30 • Open or short to ground circuit between the generator terminal D and the PCM terminal 53 • Cut drive belt off or came drive belt off • Generator malfunction — Rectifier circuit malfunction — Brush abrasion • PCM malfunction

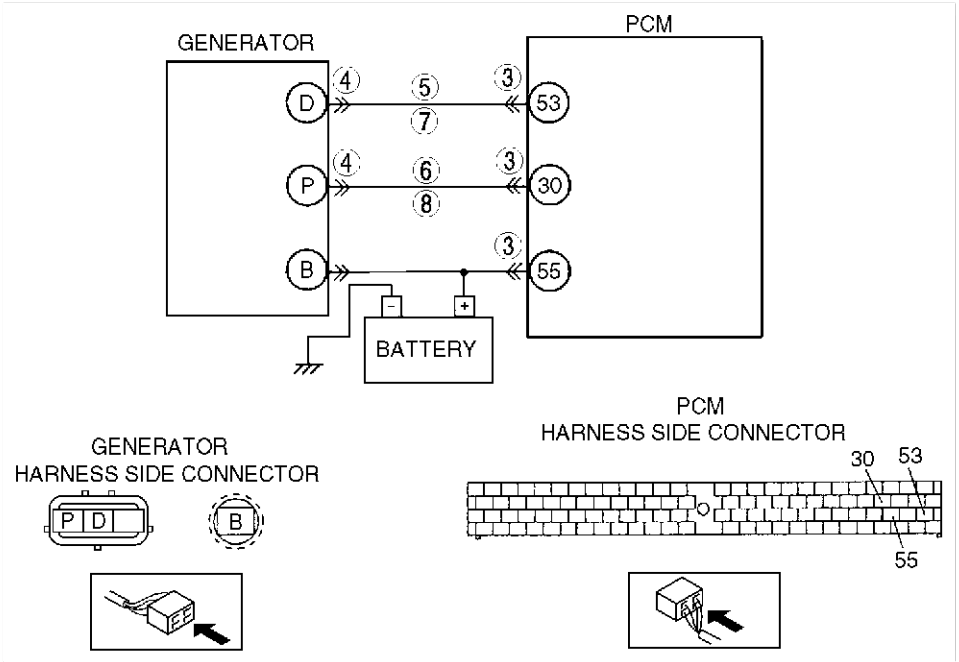

Diagnostic procedure

STEP	INSPECTION		ACTION
1	**VERIFY RELATED SERVICE INFORMATION AVAILABILITY** • Check for related Service Information availability. • Is any related Service Information available?	Yes	Perform repair or diagnosis according to available Service Information. • If vehicle is not repaired, go to next step.
		No	Go to next step.
2	**INSPECT DRIVE BELT CONDITION** • Verify that drive belt auto tensioner indicator mark in not exceeding limit. • Is front drive belt okay?	Yes	Go to next step.
		No	Replace and/or adjust drive belt, then go to Step 9.

STEP	INSPECTION		ACTION
3	**INSPECT PCM CONNECTOR FOR POOR CONNECTION** • Turn ignition key to OFF. • Disconnect PCM connector. • Check for poor connection (damaged, pulled-out terminals, corrosion, etc.). • Are there any malfunctions?	Yes	Repair terminals, then go to Step 9.
		No	Go to next step.
4	**INSPECT GENERATOR CONNECTOR FOR POOR CONNECTION** • Disconnect generator connector. • Check for poor connection (damaged, pulled-out terminals, corrosion, etc.). • Are there any malfunctions?	Yes	Repair or replace terminals, then go to Step 9.
		No	Go to next step.
5	**INSPECT GENERATOR CONTROL CIRCUIT FOR SHORT TO GROUND** • Check continuity between generator terminal D (harness-side) and body ground. • Is there any continuity?	Yes	Repair or replace harness for short to ground, then go to Step 9.
		No	Go to next step.
6	**INSPECT GENERATOR OUTPUT VOLTAGE MONITOR CIRCUIT FOR SHORT TO GROUND** • Check continuity between generator terminal P (harness-side) and body ground. • Is there any continuity?	Yes	Repair or replace harness for short to ground, then go to Step 9.
		No	Go to next step.
7	**INSPECT GENERATOR CONTROL CIRCUIT FOR OPEN CIRCUIT** • Disconnect PCM connector. • Measure resistance between generator terminal D (harness-side) and PCM terminal 53. • Is there any continuity?	Yes	Go to next step.
		No	Repair or replace harness for open circuit, then go to Step 9.
8	**INSPECT GENERATOR OUTPUT VOLTAGE MONITOR CIRCUIT FOR OPEN CIRCUIT** • Measure resistance between generator terminal P (harness-side) and PCM terminal 30. • Is there any continuity?	Yes	Repair or replace generator, then go to next step.
		No	Repair or replace harness for open, then go to next step.
9	**VERIFY TROUBLESHOOTING OF DTC P1631 COMPLETED** • Make sure to reconnect all disconnected connectors. • Clear DTC from memory using WDS or equivalent. • Turn ignition switch to OFF, then start engine. • Is same DTC present?	Yes	Replace PCM, then go to next step.
		No	Go to next step.
10	**VERIFY AFTER REPAIR PROCEDURE** • Perform “After Repair Procedure”. (See F4–110 AFTER REPAIR PROCEDURE.) • Is there any DTC present?	Yes	Go to applicable DTC inspection. (See F4–113 DTC TABLE.)
		No	Troubleshooting completed.

End Of Sta

DTC P1633

AME427001083W11

DTC P1633	Battery overcharge
DETECTION CONDITION	• The PCM monitors the input voltage from the generator and battery positive terminal. If the PCM detected that the generator output voltage **above 18.5 V** or battery voltage **above 16.0 V** for **5 s** while engine running, the PCM determines that the charging system has malfunction.
POSSIBLE CAUSE	• Short to power circuit between the generator connector terminal D and the PCM connector terminal 53 • Generator malfunction • PCM malfunction

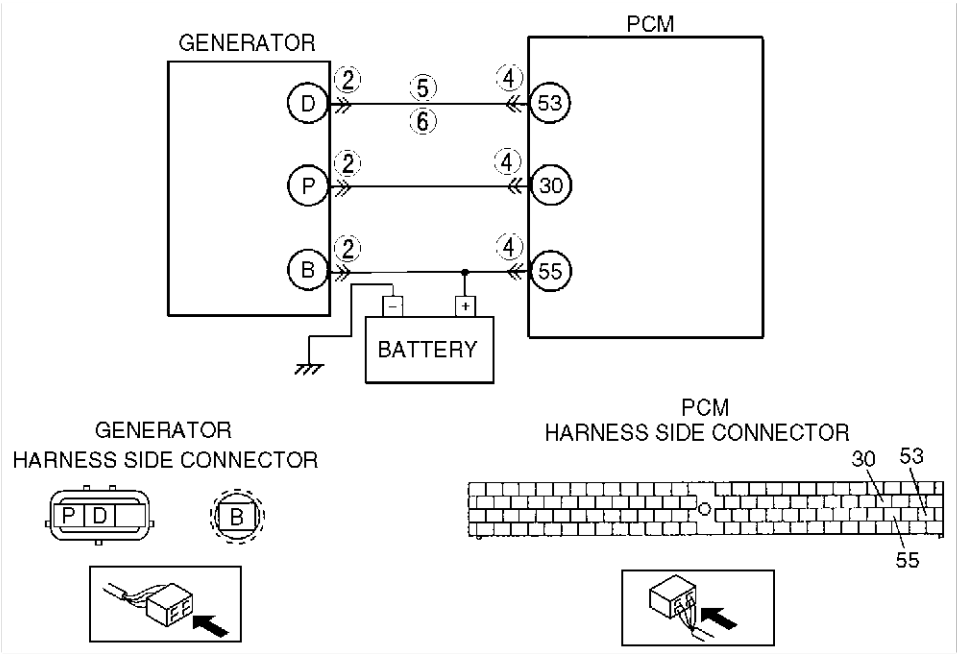

Diagnostic procedure

STEP	INSPECTION		ACTION
1	**VERIFY RELATED SERVICE INFORMATION AVAILABILITY** • Check for related Service Information availability. • Is any related Service Information available?	Yes	Perform repair or diagnosis according to available Service Information. • If vehicle is not repaired, go to next step.
		No	Go to next step.
2	**INSPECT GENERATOR CONNECTOR FOR POOR CONNECTION** • Turn ignition key to OFF. • Disconnect generator connector. • Check for poor connection (damaged, pulled-out terminals, corrosion, etc.). • Is there any malfunction?	Yes	Repair or replace terminals, then go to Step 7.
		No	Go to next step.

STEP	INSPECTION		ACTION
3	**CLASSIFY GENERATOR MALFUNCTION OR OTHER MALFUNCTION** • Turn ignition key to ON (Engine OFF). • Measure voltage between generator terminal D (harness-side) and body ground. • Is there voltage **B+**?	Yes	Go to next step.
		No	Malfunction at the generator. Go to step 6.
4	**INSPECT PCM CONNECTOR FOR POOR CONNECTION** • Turn ignition key to OFF. • Disconnect PCM connector. • Check for poor connection (damaged, pulled-out terminals, corrosion, etc.). • Are there any malfunctions?	Yes	Repair or replace pins, then go to Step 7.
		No	Go to next step.
5	**INSPECT GENERATOR CONTROL CIRCUIT FOR SHORT TO POWER** • Turn ignition key to ON (Engine OFF). • Measure voltage between generator terminal D (harness-side) and body ground. • Is there voltage **B+**?	Yes	Repair or replace harness for short to power, then go to Step 7.
		No	Go to step 7.
6	**INSPECT GENERATOR CONTROL TERMINAL FOR SHORT TO POWER** • Measure resistance between generator terminal D (part-side) and body ground. • Is there voltage **B+**?	Yes	Repair or replace generator, then go to next step.
		No	Go to next step.
7	**VERIFY TROUBLESHOOTING OF DTC P1633 COMPLETED** • Make sure to reconnect all disconnected connectors. • Turn ignition key to OFF then ON (Engine OFF). • Is same DTC present?	Yes	Replace PCM, then go to next step.
		No	Go to next step.
8	**VERIFY AFTER REPAIR PROCEDURE** • Perform “After Repair Procedure”. (See F4–110 AFTER REPAIR PROCEDURE.) • Is there any DTC present?	Yes	Go to applicable DTC inspection. (See F4–113 DTC TABLE.)
		No	Troubleshooting completed.

End Of Ste

DTC P1634

AME427001083W12

DTC P1634	Generator terminal B circuit open
DETECTION CONDITION	• The PCM monitors the input voltage from the generator and battery positive terminal. If the PCM detected that the generator output voltage **above 17.0 V** and battery voltage **below 11.0 V** for **5 s** while engine running, the PCM determines that the charging system has malfunction.
POSSIBLE CAUSE	• Open circuit between the generator terminal B and the battery positive terminal • Battery malfunction • PCM malfunction

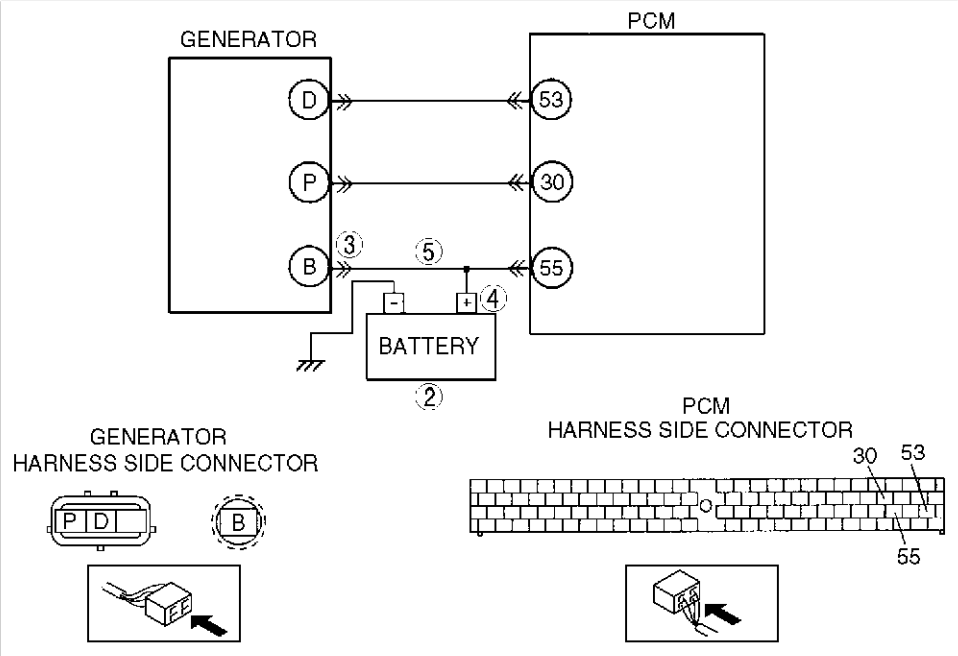

Diagnostic procedure

STEP	INSPECTION		ACTION
1	**VERIFY RELATED SERVICE INFORMATION AVAILABILITY** • Check for related Service Information availability. • Is any related Service Information available?	Yes	Perform repair or diagnosis according to available Service Information. • If vehicle is not repaired, go to next step.
		No	Go to next step.
2	**INSPECT BATTERY** • Turn ignition key to OFF. • Inspect battery. (See G–10 BATTERY INSPECTION.) • Is battery okay?	Yes	Replace battery, then go to Step 6.
		No	Go to next step.
3	**INSPECT GENERATOR TERMINAL FOR POOR INSTALLATION** • Turn ignition key to OFF. • Check for looseness of generator terminal B installation nut. • Is nut loose?	Yes	Tighten generator terminal B installation nut, then go to Step 6.
		No	Go to next step.
4	**INSPECT BATTERY POSITIVE TERMINAL FOR POOR INSTALLATION** • Check for looseness of battery positive terminal. • Is terminal loose?	Yes	Connect battery positive terminal correctly, then go to Step 6.
		No	Go to next step.
5	**INSPECT BATTERY CHARGING CIRCUIT** • Start engine. • Disconnect battery positive terminal. • Is engine stalled?	Yes	Repair or replace harness between generator terminal B and battery positive terminal, then go to next step.
		No	Go to next step.

STEP	INSPECTION		ACTION
6	**VERIFY TROUBLESHOOTING OF DTC P1634 COMPLETED** • Make sure to reconnect all disconnected connectors. • Clear DTC from memory using WDS or equivalent. • Turn ignition key to OFF, then start engine. • Is same DTC present?	Yes	Replace PCM, then go to next step.
		No	Go to next step.
7	**VERIFY AFTER REPAIR PROCEDURE** • Perform “After Repair Procedure”. (See F4–110 AFTER REPAIR PROCEDURE.) • Is there any DTC present?	Yes	Go to applicable DTC inspection. (See F4–113 DTC TABLE.)
		No	Troubleshooting completed.

End Of Sie

DTC U0073

AME427001083W13

DTC U0073	CAN BUS OFF
DETECTION CONDITION	• CAN controller is damaged. **Diagnostic support note** • This is a continuous monitor (other). • MIL does not come on. • FREEZE FRAME DATA is not available. • DTC is stored in the PCM memory.
POSSIBLE CAUSE	• Short to ground circuit between TCM terminal 2M and PCM terminal 50 • Short to power circuit between TCM terminal 2J and PCM terminal 49 • CAN communication line short each other • CAN controller damaged.

F4

Diagnostic procedure

STEP	INSPECTION		ACTION
1	**VERIFY RELATED SERVICE INFORMATION AVAILABILITY** • Check for related Service Information availability. • Is any related Service Information available?	Yes	Perform repair or diagnosis according to available Service Information. • If vehicle is not repaired, go to next step.
		No	Go to next step.
2	**VERIFY RELATED REPAIR INFORMATION AVAILABILITY** • Check for related Service Bulletins and/or on-line repair information availability. • Is any related repair information available?	Yes	Perform repair or diagnostic according to available repair information. • If vehicle is not repaired, then go to next step.
		No	Go to next step.
3	**INSPECT TCM CONNECTOR FOR POOR CONNECTION** • Turn ignition key to OFF. • Disconnect TCM connector. • Check for poor connection (damaged, pulled-out pins, corrosion, etc.). • Are there any malfunctions?	Yes	Repair terminal, then go to Step 8.
		No	Go to next step.
4	**CHECK CAN COMMUNICATION LINE FOR SHORT TO GROUND** • Check continuity between TCM connector terminal 2M (harness-side) and body ground. • Is there continuity?	Yes	Repair or replace wiring harness, then go to Step 8.
		No	Go to next step.
5	**CHECK CAN COMMUNICATION LINE FOR SHORT TO POWER** • Measure voltage between TCM connector terminal 2J (harness-side) and body ground. • Is there voltage **B+**?	Yes	Repair or replace wiring harness, then go to Step 8.
		No	Go to next step.
6	**INSPECT PCM CONNECTOR FOR POOR CONNECTION** • Turn ignition key to OFF. • Disconnect PCM connector. • Check for poor connection (damaged, pulled-out pins, corrosion, etc.). • Are there any malfunctions?	Yes	Repair terminal, then go to Step 8.
		No	Go to next step.

STEP	INSPECTION		ACTION
7	**CHECK CAN COMMUNICATION LINE FOR SHORT TO EACH OTHER** • Check continuity between PCM connector terminal 49 and 50 (harness-side). • Is there continuity?	Yes	Repair or replace wiring harness, then go to next step.
		No	Go to next step.
8	**VERIFY DTC U0073 DETECTED AGAIN** • Clear DTC from memory using WDS or equivalent. • Turn ignition key to OFF, then start engine. • Is same DTC present?	Yes	Replace PCM, then go to next step.
		No	Go to next step.
9	**VERIFY AFTER REPAIR PROCEDURE** • Perform “After Repair Procedure”. (See F4–110 AFTER REPAIR PROCEDURE.) • Is there any DTC present?	Yes	Go to applicable DTC inspection. (See F4–113 DTC TABLE.)
		No	Troubleshooting completed.

End Of Ste

DTC U0101

AME427001083W14

DTC U0101	PCM cannot receive any signals from TCM
DETECTION CONDITION	• PCM cannot receive any signals from TCM. **Diagnostic support note** • This is a continuous monitor (CCM). • MIL comes on. • FREEZE FRAME DATA is available. • DTC is stored in the PCM memory.
POSSIBLE CAUSE	• Short to ground circuit between TCM terminal 2J and PCM terminal 49 • Short to ground circuit between TCM terminal 2M and PCM terminal 50 • Open circuit between TCM terminal 2J and PCM terminal 49 • Open circuit between TCM terminal 2M and PCM terminal 50 • Short to power circuit between TCM terminal 2J and PCM terminal 49 • Short to power circuit between TCM terminal 2M and PCM terminal 50 • Damaged TCM • Damaged PCM

Diagnostic procedure

STEP	INSPECTION		ACTION
1	**VERIFY FREEZE FRAME DATA HAS BEEN RECORDED** • Has FREEZE FRAME DATA been recorded?	Yes	Go to next step.
		No	Record FREEZE FRAME DATA on repair order, then go to next step.
2	**VERIFY RELATED SERVICE INFORMATION AVAILABILITY** • Check for related Service Information availability. • Is any related Service Information available?	Yes	Perform repair or diagnosis according to available Service Information. • If vehicle is not repaired, go to next step.
		No	Go to next step.
3	**VERIFY RELATED PENDING CODE OR STORED DTCS** • Turn ignition key to OFF then ON (Engine OFF). • Verify related pending code or stored DTCs. • Is DTC U0073 for TCM present?	Yes	Go to appropriate DTC inspection. (See K2–174 DTC U0073)
		No	Go to next step.
4	**INSPECT TCM CONNECTOR FOR POOR CONNECTION** • Turn ignition key to OFF. • Disconnect TCM connector. • Check for poor connection (damaged, pulled-out pins, corrosion, etc.). • Are there any malfunctions?	Yes	Repair terminal, then go to Step 9.
		No	Go to next step.

STEP	INSPECTION		ACTION
5	**CHECK CAN COMMUNICATION LINE FOR SHORT TO GROUND** • Check continuity between following terminals: — TCM connector terminal 2J (harness-side) and body ground — TCM connector terminal 2M (harness-side) and body ground • Is there continuity?	Yes	Repair or replace wiring harness, then go to Step 9.
		No	Go to next step.
6	**CHECK CAN COMMUNICATION LINE FOR SHORT TO POWER** • Measure voltage between following terminals: — TCM connector terminal 2J (harness-side) and body ground — TCM connector terminal 2M (harness-side) and body ground • Is there voltage **B+**?	Yes	Repair or replace wiring harness, then go to Step 9.
		No	Go to next step.
7	**INSPECT PCM CONNECTOR FOR POOR CONNECTION** • Turn ignition key to OFF. • Disconnect PCM connector. • Check for poor connection (damaged, pulled-out pins, corrosion, etc.). • Are there any malfunctions?	Yes	Repair terminal, then go to Step 9.
		No	Go to next step.
8	**CHECK CAN COMMUNICATION LINE FOR OPEN CIRCUIT** • Disconnect PCM connector. • Check continuity between following terminals: — TCM connector terminal 2J (harness-side) and PCM connector terminal 49 (harness-side) — TCM connector terminal 2M (harness-side) and PCM connector terminal 50 (harness-side) • Is there continuity?	Yes	Repair or replace wiring harness, then go to Step 9.
		No	Go to next step.
9	**VERIFY TROUBLESHOOTING OF DTC U0101 COMPLETED** • Make sure to reconnect all disconnected connectors. • Clear DTC from PCM memory using WDS or equivalent. • Start engine and warm it up completely. • Is same PENDING CODE of DTC present?	Yes	Replace PCM, then go to next step.
		No	Go to next step.
10	**VERIFY AFTER REPAIR PROCEDURE** • Perform “After Repair Procedure”. (See F4–110 AFTER REPAIR PROCEDURE.) • Is there any DTC present?	Yes	Go to applicable DTC inspection. (See F4–113 DTC TABLE.)
		No	Troubleshooting completed.

End Of Ste

TROUBLESHOOTING

CONTROL SYSTEM DEVICE AND CONTROL RELATIONSHIP CHART

AME428018881W01

×: Applicable

Component	Idle air control (IAC)	Fuel injection control	Electronic spark advance (ESA) control	Fuel pump control	HO2S heater (front) control	HO2S heater (rear) control*	Electrical fan control	Purge control	EGR control	IMCC	A/C cut-off control	Generator control	Immobilizer system
Input													
Brake switch		×											
Refrigerant pressure switch, A/C switch, blower fan switch and A/C amplifier	×	×					×				×		
CKP sensor	×	×	×	×	×			×	×	×		×	
CMP sensor		×	×										
VSS		×	×						×			×	
EGR boost sensor (BARO sensor)		×	×					×					
MAF sensor	×	×	×		×			×	×				
ECT sensor	×	×	×		×	×	×	×	×	×	×	×	
IAT sensor	×	×						×	×			×	
TP sensor	×	×	×				×		×	×	×	×	
Front HO2S		×											
Knock sensor			×										
TR switch	×	×	×										
PSP switch	×	×	×								×		
Generator (terminal P: output voltage)	×											×	
DLC in engine compartment (TEN)	×		×				×						
Battery positive voltage		×	×					×				×	
Immobilizer unit		×	×										×
Output													
IAC valve	×												
Fuel injectors		×											×
Ignition coil			×										×
Fuel pump relay				×									
Front HO2S heater					×								
Rear HO2S heater*						×							
Fan control module							×						
Purge solenoid valve								×					
EGR valve									×				
IMCC actuator										×			
A/C relay											×		
Generator (terminal D: field coil)												×	
Generator warning light												×	

* : (European (L.H.D.) specs.)

End Of Sec

FOREWORD

AME428018881W02

- When the customer reports a vehicle malfunction, check the malfunction indicator lamp (MIL) indication and diagnostic trouble code (DTC), then diagnose the malfunction according to following flowchart.
  - — If a DTC exists, diagnose the applicable DTC inspection. (See F4–113 DTC TABLE.)
  - — If no DTC exists and the MIL does not illuminate or flash, diagnose the applicable symptom troubleshooting. (See F4–250 SYMPTOM DIAGNOSTIC INDEX.)

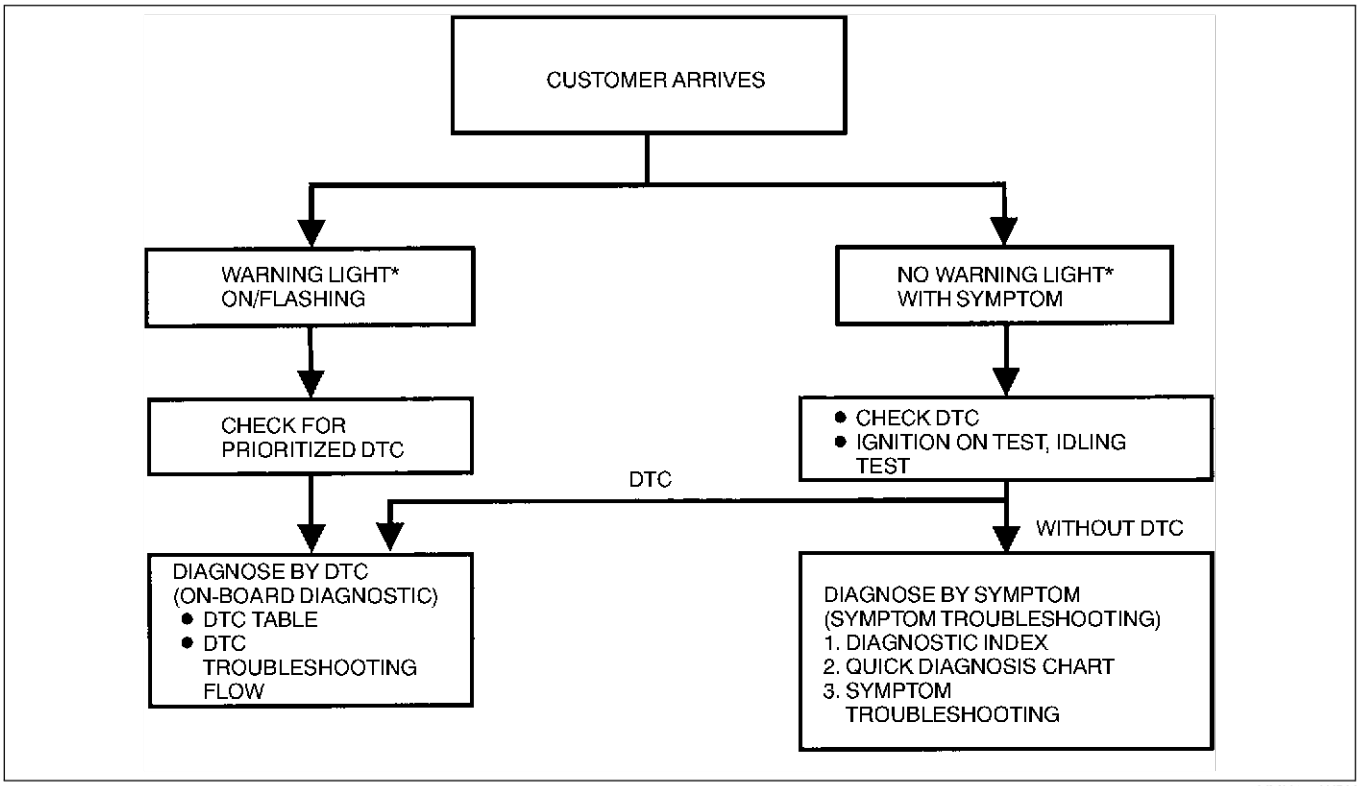

YMU102WBX

*: Malfunction Indicator Lamp (MIL), Generator Warning Light, Security Light

End Of Sta

INTERMITTENT CONCERN TROUBLESHOOTING

AME428018881W03

Vibration Method

- If malfunction occurs or becomes worse while driving on a rough road or when engine is vibrating, perform the steps below.

Note

- There are several reasons vehicle or engine vibration could cause an electrical malfunction. Some of the things to check for are:
  - — Connectors not fully seated.
  - — Wire harnesses not having full play.
  - — Wires laying across brackets or moving parts.
  - — Wires routed too close to hot parts.
- An improperly routed, improperly clamped, or loose harness can cause wiring to become pinched between parts.
- The connector joints, points of vibration, and places where wire harnesses pass through the firewall, body panels, etc. are the major areas to be checked.

Inspection Method for Switch Connectors or Wires

1. Connect WDS or equivalent to DLC-2.
2. Turn ignition key to ON (Engine OFF).

Note
- If engine starts and runs, perform the following steps at idle.

3. Access PIDs for the switch you are inspecting.
4. Turn switch on manually.
5. Shake each connector or wire harness a bit vertically and horizontally while monitoring the PID.
   - If PID value is unstable, check for poor connection.

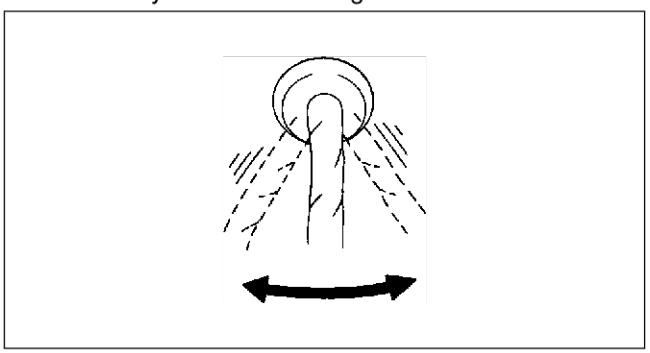

YMU103WC0

Inspection Method for Sensor Connectors or Wires

1. Connect WDS or equivalent to DLC-2.
2. Turn ignition key to ON (Engine OFF).

Note
- If engine starts and runs, perform the following steps at idle.

3. Access PIDs for the sensor you are inspecting.
4. Shake each connector or wire harness a bit vertically and horizontally while monitoring the PID.
   - If PID value is unstable, check for poor connection.

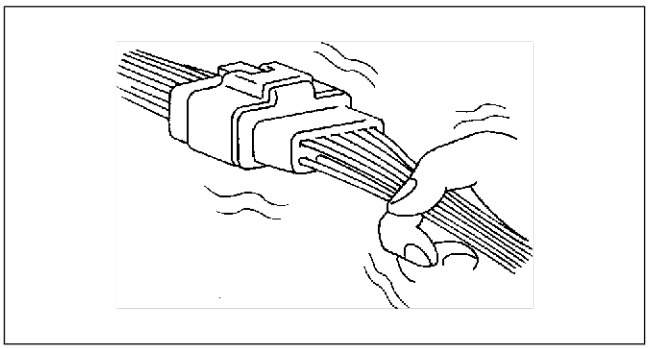

YMU103WC1

Inspection Method for Sensors

1. Connect WDS or equivalent to DLC-2.
2. Turn ignition key to ON (Engine OFF).

Note
- If engine starts and runs, perform the following steps at idle.

3. Access PIDs for the sensor you are inspecting.
4. Vibrate the sensor slightly with your finger.
   - If PID value is unstable or malfunction occurs, check for poor connection and/or poorly mounted sensor.

Inspection Method for Actuators or Relays

1. Connect WDS or equivalent to DLC-2.
2. Turn ignition key to ON (Engine OFF).

Note
- If engine starts and runs, perform the following steps at idle.

3. Prepare the SIMULATION TEST for actuators or relays that you are inspecting.
4. Vibrate the actuator or relay with your finger for 3 seconds after SIMULATION TEST is activated.
   - If variable click sound is heard, check for poor connection and/or poorly mounted actuator or relay.

Note
- Vibrating relays too strongly may result in open relays.

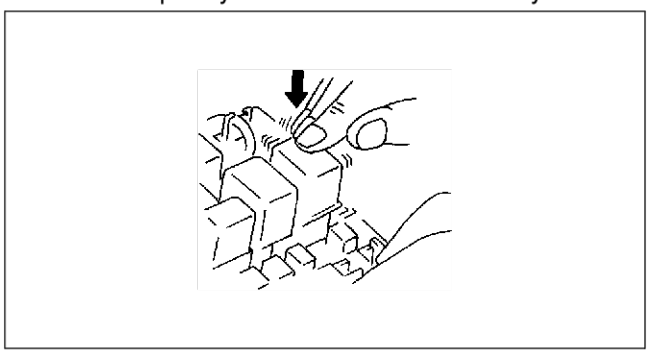

YMU103WC2

Water Sprinkling Method

If malfunction occurs only during high humidity or rainy/snowy weather, perform the following steps.

Caution
- **Indirectly change the temperature and humidity by spraying water onto the front of then radiator.**
- **If a vehicle is subject to water leakage, the leakage may damage the control module. When testing a vehicle with a water leakage problem, special caution must be used.**

1. Connect WDS or equivalent to DLC-2 if you are inspecting sensors or switches.
2. Turn ignition key to ON (Engine OFF).

Note
- If engine starts and runs, perform the following steps at idle.

3. Access PIDs for sensor or switch if you are inspecting sensors or switches.
4. If you are inspecting the switch, turn it on manually.
5. Spray water onto the vehicle or run it through a car wash.
   - If PID value is unstable or malfunction occurs, repair or replace part as necessary.

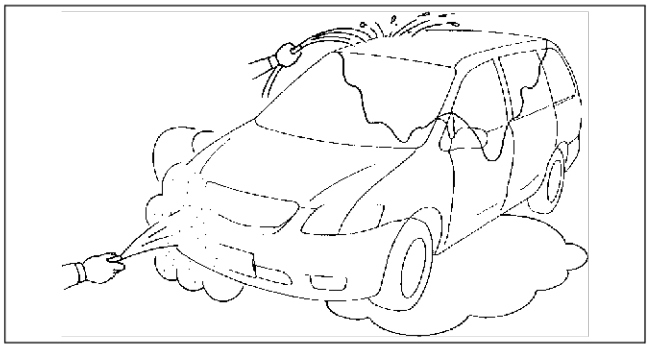

YMU103WC3

End Of Sta

SYMPTOM DIAGNOSTIC INDEX

AME428018881W04

No.	TROUBLESHOOTING ITEM		DESCRIPTION	PAGE
1	Melting of main or other fuses		—	(See F4–256 NO.1 MELTING OF MAIN OR OTHER FUSES.)
2	MIL comes on		MIL is illuminated incorrectly.	(See F4–257 NO.2 MIL COMES ON.)
3	Will not crank		Starter does not work.	(See F4–257 NO.3 WILL NOT CRANK.)
4	Hard start/long crank/erratic start/ erratic crank		Starter cranks engine at normal speed but engine requires excessive cranking time before starting.	(See F4–258 NO.4 HARD START/LONG CRANK/ ERRATIC START/ERRATIC CRANK.)
5	Engine stalls	After start/at idle	Engine stops unexpectedly at idle and/or after start.	(See F4–260 NO.5 ENGINE STALLS-AFTER START/AT IDLE.)
6	Cranks normally but will not start		Starter cranks engine at normal speed but engine will not run.	(See F4–264 NO.6 CRANKS NORMALLY BUT WILL NOT START.)
7	Slow return to idle		Engine takes more time than normal to return to idle speed.	(See F4–267 NO.7 SLOW RETURN TO IDLE.)
8	Engine runs rough/rolling idle		Engine speed fluctuates between specified idle speed and lower speed and engine shakes excessively.	(See F4–268 NO.8 ENGINE RUNS ROUGH/ROLLING IDLE.)
9	Fast idle/runs on		Engine speed continues at fast idle after warm-up. Engine runs after ignition switch is turned off.	(See F4–270 NO.9 FAST IDLE/RUNS ON.)
10	Low idle/stalls during deceleration		Engine stops unexpectedly at beginning of deceleration or recovery from deceleration.	(See F4–271 NO.10 LOW IDLE/STALLS DURING DECELERATION.)
11	Engine stalls/quits	Acceleration/ cruise	Engine stops unexpectedly at beginning of acceleration or during acceleration. Engine stops unexpectedly while cruising.	(See F4–272 NO.11 ENGINE STALLS/QUITS, ENGINE RUNS ROUGH, MISSES, BUCK/JERK, HESITATION/ STUMBLE, SURGES.)
	Engine runs rough	Acceleration/ cruise	Engine speed fluctuates during acceleration or cruising.	
	Misses	Acceleration/ cruise	Engine misses during acceleration or cruising.	
	Buck/jerk	Acceleration/ cruise/ deceleration	Vehicle bucks/jerks during acceleration, cruising, or deceleration.	
	Hesitation/ stumble	Acceleration	Momentary pause at beginning of acceleration, or during acceleration	
	Surges	Acceleration/ cruise	Momentary minor irregularity in engine output	
12	Lack/loss of power	Acceleration/ cruise	Performance poor under load (e.g. power down when climbing hills).	(See F4–275 NO.12 LACK/ LOSS OF POWER-ACCELERATION/ CRUISE.)
13	Knocking/pinging	Acceleration/ cruise	Sound is produced when air/fuel mixture is ignited by something other than spark plug (e.g. hot spot in combustion chamber).	(See F4–277 NO.13 KNOCKING/ PINGING-ACCELERATION/ CRUISE.)
14	Poor fuel economy		Fuel economy is unsatisfactory.	(See F4–278 NO.14 POOR FUEL ECONOMY.)
15	Emissions compliance		Fails emissions test	(See F4–280 NO.15 EMISSION COMPLIANCE.)
16	High oil consumption/leakage		Oil consumption is excessive.	(See F4–281 NO.16 HIGH OIL CONSUMPTION/LEAKAGE.)
17	Cooling system concerns	Overheating	Engine runs at higher than normal temperature/overheats.	(See F4–282 NO.17 COOLING SYSTEM CONCERNS-OVERHEATING.)

No.	TROUBLESHOOTING ITEM		DESCRIPTION	PAGE
18	Cooling system concerns	Runs cold	Engine does not reach normal operating temperature.	(See F4–284 NO.18 COOLING SYSTEM CONCERNS-RUNS COLD.)
19	Exhaust smoke		Blue, black, or white smoke from exhaust system	(See F4–284 NO.19 EXHAUST SMOKE.)
20	Fuel odor (in engine compartment)		Gasoline fuel smell or visible leakage	(See F4–286 NO.20 FUEL ODOR (IN ENGINE COMPARTMENT).)
21	Engine noise		Engine noise from under hood	(See F4–287 NO.21 ENGINE NOISE.)
22	Vibration concerns (engine)		Vibration from under hood or driveline	(See F4–288 NO.22 VIBRATION CONCERNS (ENGINE).
23	A/C does not work sufficiently		A/C compressor magnetic clutch does not engage when A/C is turned on.	(See F4–288 NO.23 A/C DOES NOT WORK SUFFICIENTLY.)
24	A/C always on or A/C compressor runs continuously.		A/C compressor magnetic clutch does not disengage.	(See F4–289 NO.24 A/C ALWAYS ON/A/C COMPRESSOR RUNS CONTINUOUSLY.)
25	A/C does not cut off under wide open throttle conditions.		A/C compressor magnetic clutch does not disengage under wide open throttle.	(See F4–290 NO.25 A/C DOES NOT CUT OFF UNDER WIDE OPEN THROTTLE CONDITIONS.)
26	Exhaust sulphur smell		Rotten egg smell (sulphur) from exhaust	(See F4–290 NO.26 EXHAUST SULPHUR SMELL.)
27	Fuel refill concerns		Fuel tank does not fill smoothly.	(See F4–291 NO.27 FUEL REFILL CONCERNS.)
28	Fuel filling shut off issues		Fuel does not shut off properly.	(See F4–292 NO.28 FUEL FILLING SHUT OFF ISSUES.)
29	Constant voltage		Incorrect constant voltage	(See F4–292 NO.29 CONSTANT VOLTAGE.)
30	Spark plug condition		Incorrect spark plug condition	(See F4–294 NO.30 SPARK PLUG CONDITION.)
31	ATX concerns	Upshift/downshift/ engagement	ATX concerns not related to engine performance	(See K2–182 Diagnostic Index.)

End Of Ste

SYMPTOM QUICK DIAGNOSIS CHART

AME428018881W05

Quick Diagnosis Chart

X: Applicable

	Troubleshooting item / Possible factor		Starter motor malfunction (Mechanical or electrical)	Starter circuit including ignition switch open	Improper engine oil level	Low or dead battery	Charging system malfunction	Improper engine compression	Improper valve timing	Hydrolocked engine	Improper engine oil viscosity	Improper dipstick	Base engine malfunction	Drive plate is seized.	Improper tension or damaged drive belts	Improper engine coolant level	Water and anti-freeze mixture improper.	Cooling fan system malfunction	Engine or transaxle mounts improperly installed.	Cooling fan seat improper.	Accelerator cable free play misadjustment	Fuel quality
1	Melting of main or other fuses																					
2	MIL comes on																					
3	Will not crank		×	×		×	×			×				×								
4	Hard start/long crank/erratic start/erratic crank																					×
5	Engine stalls.	After start/at idle						×	×	×												×
6	Cranks normally but will not start							×	×	×												×
7	Slow return to idle																	×				
8	Engine runs rough/rolling idle							×	×													×
9	Fast idle/runs on																				×	
10	Low idle/stalls during deceleration																					
11	Engine stalls/quits.	Acceleration/cruise						×	×													×
	Engine runs rough.	Acceleration/cruise						×	×													×
	Misses	Acceleration/cruise						×	×													×
	Buck/jerk	Acceleration/cruise/ deceleration						×	×													×
	Hesitation/stumble	Acceleration						×	×													×
	Surges	Acceleration/cruise						×	×													×
12	Lack/loss of power	Acceleration/cruise						×	×													×
13	Knocking/pinging	Acceleration/cruise						×														
14	Poor fuel economy							×	×							×		×				×
15	Emissions compliance							×	×				×									
16	High oil consumption/leakage										×	×	×									
17	Cooling system concerns	Overheating													×	×	×	×				
18	Cooling system concerns	Runs cold																×				
19	Exhaust smoke												×									
20	Fuel odor (in engine compartment)																					
21	Engine noise				×								×		×							
22	Vibration concerns (engine)														×				×	×		
23	A/C does not work sufficiently																					
24	A/C always on/A/C compressor runs continuously.																					
25	A/C does not cut off under wide open throttle conditions.																					
26	Exhaust sulphur smell																					×
27	Fuel refill concerns																					
28	Fuel filling shut off issues																					
29	Constant voltage																					
30	Spark plug condition							×			×		×				×					×
31	ATX concerns	Upshift/downshift/ engagement	(See section K2 SYMPTOM TROUBLESHOOTING.)																			

AME4280W201

X: Applicable

Troubleshooting item			Possible factor	Engine overheating	Air cleaner element clogging or restriction	Air leakage from intake-air system (Loose tubes, cracks, gaskets breakage)	IAC valve improper operation	Throttle body malfunction	IMCC malfunction	Vacuum leakage (Vacuum hose damage, misrouting)	Ignition coil malfunction (e.g. open, short or cracks)	Spark plug malfunction	CKP sensor damaged (e.g. open or short circuits).	Crankshaft pulley damaged	Fuel pump malfunction (Mechanically or electrically)	Pressure regulator malfunction	Fuel hoses restriction or clogging
1	Melting of main or other fuses																
2	MIL comes on																
3	Will not crank																
4	Hard start/long crank/erratic start/erratic crank				×	×				×		×	×	×	×	×	×
5	Engine stalls.	After start/at idle		×	×	×	×			×	×	×	×	×	×	×	×
6	Cranks normally but will not start			×		×	×			×	×	×	×	×	×	×	×
7	Slow return to idle							×									
8	Engine runs rough/rolling idle			×		×	×			×		×	×	×	×	×	×
9	Fast idle/runs on																
10	Low idle/stalls during deceleration					×	×										
11	Engine stalls/quits.	Acceleration/cruise		×	×	×		×		×		×	×	×	×	×	×
	Engine runs rough.	Acceleration/cruise		×	×	×		×		×		×	×	×	×	×	×
	Misses	Acceleration/cruise		×	×	×		×		×		×	×	×	×	×	×
	Buck/jerk	Acceleration/cruise/ deceleration		×	×	×		×		×		×	×	×	×	×	×
	Hesitation/stumble	Acceleration		×	×	×		×		×		×	×	×	×	×	×
	Surges	Acceleration/cruise		×	×	×		×		×		×	×	×	×	×	×
12	Lack/loss of power	Acceleration/cruise		×	×	×		×	×			×	×	×	×	×	×
13	Knocking/pinging	Acceleration/cruise		×											×	×	
14	Poor fuel economy				×				×			×			×	×	×
15	Emissions compliance				×	×		×				×			×	×	×
16	High oil consumption/leakage																
17	Cooling system concerns	Overheating															
18	Cooling system concerns	Runs cold															
19	Exhaust smoke				×							×			×	×	×
20	Fuel odor (in engine compartment)															×	
21	Engine noise					×				×							
22	Vibration concerns (engine)																
23	A/C does not work sufficiently																
24	A/C always on/A/C compressor runs continuously.																
25	A/C does not cut off under wide open throttle conditions.																
26	Exhaust sulphur smell																
27	Fuel refill concerns																
28	Fuel filling shut off issues																
29	Constant voltage																
30	Spark plug condition				×							×			×	×	×
31	ATX concerns	Upshift/downshift/ engagement		(See section K2 SYMPTOM TROUBLESHOOTING.)													

AME4280W202

F4

X: Applicable

Troubleshooting item		Possible factor	Injectors malfunction (Leakage or clogging, inoperative)	Fuel leakage from fuel system (including insulator, injector O-ring)	Fuel filters restriction or clogging	CMP sensor damaged (e.g. open or short circuit).	Camshaft is damaged	Improper air/fuel mixture ratio control	Exhaust system restriction or clogging	Catalytic converter malfunction	EGR system malfunction	EVAP control system malfunction	PCV valve malfunction	V-reference supply circuit malfunction	Main relay malfunction (Mechanically or electrically)	ECT sensor malfunction	TR switch misadjustment	P/N position switch in TR switch open.	Brake switch and related circuit malfunction
1	Melting of main or other fuses																		
2	MIL comes on																		
3	Will not crank																×	×	×
4	Hard start/long crank/erratic start/erratic crank				×			×	×		×	×	×						
5	Engine stalls.	After start/at idle	×	×				×	×		×	×	×		×				
6	Cranks normally but will not start		×	×				×	×		×	×	×	×	×				
7	Slow return to idle															×			
8	Engine runs rough/rolling idle		×		×	×	×	×	×		×	×	×						
9	Fast idle/runs on															×			
10	Low idle/stalls during deceleration							×				×							×
11	Engine stalls/quits.	Acceleration/cruise	×		×	×	×	×	×		×	×	×	×	×				
	Engine runs rough.	Acceleration/cruise	×		×	×	×	×	×		×	×	×	×	×				
	Misses	Acceleration/cruise	×		×	×	×	×	×		×	×	×	×	×				
	Buck/jerk	Acceleration/cruise/ deceleration	×		×	×	×	×	×		×	×	×	×	×				
	Hesitation/stumble	Acceleration	×		×	×	×	×	×		×	×	×	×	×				
	Surges	Acceleration/cruise	×		×	×	×	×	×		×	×	×	×	×				
12	Lack/loss of power	Acceleration/cruise	×			×	×		×		×	×	×						
13	Knocking/pinging	Acceleration/cruise																	
14	Poor fuel economy				×	×	×		×				×						
15	Emissions compliance				×	×	×	×	×	×	×	×	×						
16	High oil consumption/leakage												×						
17	Cooling system concerns	Overheating																	
18	Cooling system concerns	Runs cold																	
19	Exhaust smoke		×										×						
20	Fuel odor (in engine compartment)			×								×							
21	Engine noise																		
22	Vibration concerns (engine)																		
23	A/C does not work sufficiently																		
24	A/C always on/A/C compressor runs continuously.																		
25	A/C does not cut off under wide open throttle conditions.																		
26	Exhaust sulphur smell											×							
27	Fuel refill concerns											×							
28	Fuel filling shut off issues											×							
29	Constant voltage																		
30	Spark plug condition		×	×				×								×			
31	ATX concerns	Upshift/downshift/ engagement	(See section K2 SYMPTOM TROUBLESHOOTING.)																

AME4280W203

X: Applicable

	Possible factor / Troubleshooting item		Engine overheating	Air cleaner element clogging or restriction	Air leakage from intake-air system (Loose tubes, cracks, gaskets breakage)	IAC valve improper operation	Throttle body malfunction	IMCC malfunction	Vacuum leakage (Vacuum hose damage, misrouting)	Ignition coil malfunction (e.g. open, short or cracks)	Spark plug malfunction	CKP sensor damaged (e.g. open or short circuits).	Crankshaft pulley damaged	Fuel pump malfunction (Mechanically or electrically)	Pressure regulator malfunction	Fuel hoses restriction or clogging
1	Melting of main or other fuses															
2	MIL comes on															
3	Will not crank															
4	Hard start/long crank/erratic start/erratic crank			×	×				×		×	×	×	×	×	×
5	Engine stalls.	After start/at idle	×	×	×	×			×	×	×	×	×	×	×	×
6	Cranks normally but will not start		×		×	×			×	×	×	×	×	×	×	×
7	Slow return to idle						×									
8	Engine runs rough/rolling idle		×		×	×			×		×	×	×	×	×	×
9	Fast idle/runs on															
10	Low idle/stalls during deceleration				×	×										
11	Engine stalls/quits.	Acceleration/cruise	×	×	×		×		×		×	×	×	×	×	×
	Engine runs rough.	Acceleration/cruise	×	×	×		×		×		×	×	×	×	×	×
	Misses	Acceleration/cruise	×	×	×		×		×		×	×	×	×	×	×
	Buck/jerk	Acceleration/cruise/ deceleration	×	×	×		×		×		×	×	×	×	×	×
	Hesitation/stumble	Acceleration	×	×	×		×		×		×	×	×	×	×	×
	Surges	Acceleration/cruise	×	×	×		×		×		×	×	×	×	×	×
12	Lack/loss of power	Acceleration/cruise	×	×	×		×	×			×	×	×	×	×	×
13	Knocking/pinging	Acceleration/cruise	×											×	×	
14	Poor fuel economy			×				×			×			×	×	×
15	Emissions compliance			×	×		×				×			×	×	×
16	High oil consumption/leakage															
17	Cooling system concerns	Overheating														
18	Cooling system concerns	Runs cold														
19	Exhaust smoke			×							×			×	×	×
20	Fuel odor (in engine compartment)														×	
21	Engine noise				×				×							
22	Vibration concerns (engine)															
23	A/C does not work sufficiently															
24	A/C always on/A/C compressor runs continuously.															
25	A/C does not cut off under wide open throttle conditions.															
26	Exhaust sulphur smell															
27	Fuel refill concerns															
28	Fuel filling shut off issues															
29	Constant voltage															
30	Spark plug condition			×							×			×	×	×
31	ATX concerns	Upshift/downshift/ engagement	(See section K2 SYMPTOM TROUBLESHOOTING.)													

AME4280W204

End Of Ste

F4

NO.1 MELTING OF MAIN OR OTHER FUSES

AME428018881W06

1	Melting of main or other fuses

[TROUBLESHOOTING HINTS]
Inspect condition of fuse.

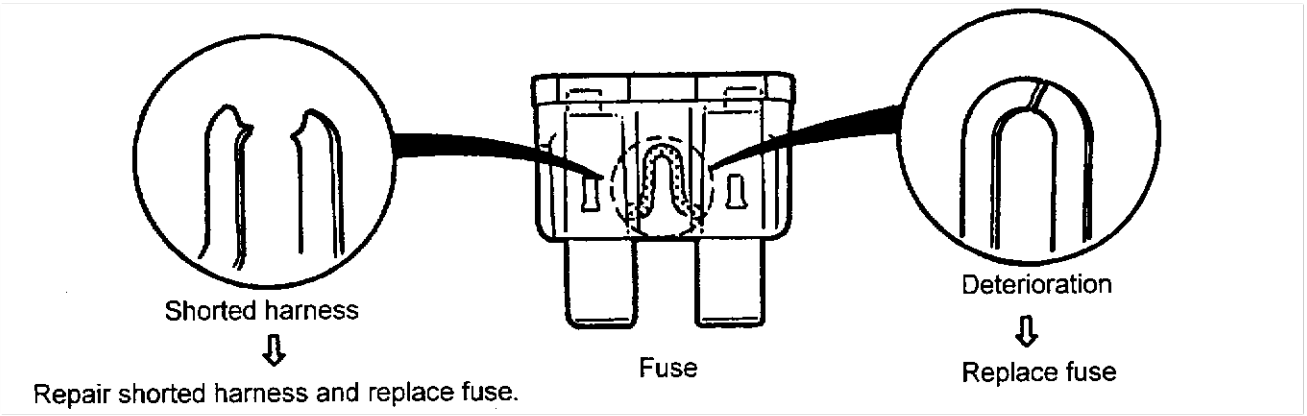

Damaged Fuse	Related Wiring Harness
MAIN	**MAIN fuse** • IG KEY2 fuse • BTN fuse • FAN1 fuse • FAN2 fuse
IG KEY1	**IG KEY1 fuse** • Ignition switch — ENGINE fuse
FUEL PUMP	**FUEL PUMP fuse** • Fuel pump relay — Fuel pump unit
BTN	**BTN fuse** • ROOM fuse
IG KEY2	**IG KEY2 fuse** • Ignition switch
FAN1	**FAN1 fuse** • Cooling fan relay — Fan control module
FAN2	**FAN2 fuse** • Cooling fan relay — Fan control module
ROOM	**ROOM fuse** • Immobilizer unit • DLC-2
ENGINE	**ENGINE fuse** • Main relay • Capacitor • Ignition coils • HO2S
EGI INJ	**EGI INJ fuse** • Main relay — EGR valve — EGR boost sensor solenoid valve* — Purge solenoid valve — MAF sensor — Fuel injectors — IMCC actuator — Fuel pump relay • EEC fuse • PCM
EEC	**EEC fuse** • PCM

* : Used for Australian, General (L.H.D. R.H.D.) specs.

If malfunction remains, refer to related Service Information and perform repair or diagnosis.
- If vehicle is repaired, troubleshooting completed.
- If vehicle is not repaired or additional diagnostic information is not available, replace or reprogram PCM.

NO.2 MIL COMES ON

AME428018881W07

2	MIL comes on
DESCRIPTION	• MIL is illuminated incorrectly.
POSSIBLE CAUSE	• MIL is illuminated for emission-related concern (DTCs are stored in PCM) • Short to GND circuit between MIL (located on instrument cluster) and PCM **Note** • If MIL blinks at steady rate, misfire condition could possibly exist.

Diagnostic procedure

STEP	INSPECTION		ACTION
1	• Connect WDS or equivalent to DLC–2. • Turn ignition key to ON. • Retrieve any DTCs. • Is “PASSED” displayed?	Yes	**No DTC is displayed:** • Inspect for short to GND circuit between MIL (located on instrument cluster) and PCM terminal 2.
		No	**DTC is displayed:** • Go to appropriate DTC test.
2	• Verify test results. — If okay, return to diagnostic index to service any additional symptoms. — If malfunction remains, inspect related Service Information and perform repair or diagnosis. • If vehicle is repaired, troubleshooting completed. • If vehicle is not repaired or additional diagnostic information is not available, replace or reprogram PCM.		

End Of Sta

NO.3 WILL NOT CRANK

AME428018881W08

3	Will not crank
DESCRIPTION	• Starter does not work.
POSSIBLE CAUSE	• Open circuit between ignition switch and starter • TR switch malfunction • TR switch misadjustment • Starter malfunction • Seized/hydrolocked engine, flywheel or drive plate

Diagnostic procedure

STEP	INSPECTION		ACTION
1	• Verify following: — Battery connection — Battery condition — If transaxle is in Park or Neutral — Fuses • Are all items okay?	Yes	Go to next step.
		No	Service as necessary. Repeat Step 1.
2	• Is clicking sound heard from starter when ignition key is turned to START?	Yes	Go to next step.
		No	Go to Step 4.
3	• Inspect starting system. (See G–18 STARTER INSPECTION.) • Is starting system okay?	Yes	Inspect for seized/hydrolocked engine, flywheel or drive plate.
		No	Repair or replace components as required.
4	• Do any other electrical accessories work?	Yes	Go to next step.
		No	Inspect charging system. (See G–10 BATTERY INSPECTION.) (See G–13 GENERATOR INSPECTION.)
5	• Inspect adjustment of TR switch. • Is TR switch adjusted properly?	Yes	Go to next step.
		No	If TR switch is adjusted properly, inspect for open circuit between TR switch and PCM terminal 64 or starter.

STEP	INSPECTION		ACTION
6	• Connect WDS or equivalent to DLC–2. • Turn ignition key to ON. • Retrieve any DTCs. • Is “PASSED” displayed?	Yes	**No DTC displayed:** • Inspect START circuit in ignition switch. • Inspect for open circuit between ignition switch and starter.
		No	**DTC is displayed:** • Go to appropriate DTC test. **Communication error message is displayed:** • Inspect for following: — Open circuit between main relay terminal D and PCM terminal 71/97 — Open main relay GND circuit — Main relay is stuck open. — Open or poor GND circuit (PCM terminal 24, 51, 76, 77 or 103) — Poor connection of vehicle body GND
7	• Verify test results. — If okay, return to diagnostic index to service any additional symptoms. — If malfunction remains, inspect related Service Information and perform repair or diagnosis. • If vehicle is repaired, troubleshooting completed. • If vehicle is not repaired or additional diagnostic information is not available, replace or reprogram PCM.		

End Of Sie

NO.4 HARD START/LONG CRANK/ERRATIC START/ERRATIC CRANK

AME428018881W09

4	Hard start/long crank/erratic start/erratic crank
DESCRIPTION	• Starter cranks engine at normal speed but engine requires excessive cranking time before start. • Battery is in normal condition.
POSSIBLE CAUSE	• Spark leakage from high-tension leads • Vacuum leakage • Poor fuel quality • Starting system malfunction • Spark plug malfunction • Air leakage from intake-air system • Erratic signal from CKP sensor • Erratic signal from CMP sensor • Air cleaner restriction • IAC valve malfunction • PCV valve malfunction • Inadequate fuel pressure • Purge solenoid valve malfunction • MAF sensor contamination • Restriction in exhaust system • EGR valve malfunction **Warning** • **The following troubleshooting flow chart contains the fuel system diagnosis and repair procedures. Read the following warnings before performing the fuel system services:** **— Fuel vapor is hazardous. It can easily ignite, causing serious injury and damage. Always keep sparks and flames away from fuel.** **— Fuel line spills and leakage are dangerous. Fuel can ignite and cause serious injuries or death and damage. Fuel can also irritate skin and eyes. To prevent this, always complete “BEFORE REPAIR PROCEDURE” and “AFTER REPAIR PROCEDURE” described in this manual.** **(See F4–65 BEFORE REPAIR PROCEDURE.)** **(See F4–65 AFTER REPAIR PROCEDURE.)**

Diagnostic procedure

STEP	INSPECTION		ACTION
1	• Inspect for following: — Vacuum leakage — Proper fuel quality (e.g. proper octane, contamination, winter/summer blend) — Loose bands on intake-air system — Cracks on intake-air system parts — Air cleaner restriction • Are all items okay?	Yes	Go to next step.
		No	Service as necessary. Repeat Step 1.

STEP	INSPECTION		ACTION
2	• Connect WDS or equivalent to DLC–2. • Turn ignition key to ON. • Retrieve any DTCs. • Is "PASSED" displayed?	Yes	**No DTC is displayed:** • Go to next step.
		No	**DTC is displayed:** • Go to appropriate DTC test.
3	• Is engine overheating?	Yes	Go to flowchart "No.17 Cooling system concerns—Overheating".
		No	Go to next step.
4	• Inspect for cracks on high-tension leads • Is there any crack on high-tension leads?	Yes	Repair suspected high-tension lead.
		No	Go to next step.
5	• Inspect spark plug conditions. • Is spark plug wet, covered with carbon or grayish white?	Yes	**Spark plug is wet or covered with carbon:** • Inspect for fuel leakage from fuel injector. **Spark plug is grayish white:** • Inspect for clogged fuel injector.
		No	Install spark plugs on original cylinders. Go to next step.
6	• Visually inspect CKP sensor and teeth of crankshaft pulley. • Are CKP sensor and teeth of crankshaft pulley okay?	Yes	Go to next step.
		No	Replace malfunctioning part.
7	• Remove and shake PCV valve. • Does PCV valve rattle?	Yes	Go to next step.
		No	Replace PCV valve.
8	• Install fuel pressure gauge between pulsation damper and fuel distributor. • Connect jumper wire between F/P terminal at DLC in engine compartment and GND. (See F4–65 AFTER REPAIR PROCEDURE.) • Turn ignition key to ON (Engine OFF). • Is fuel line pressure correct? (See F4–66 FUEL LINE PRESSURE INSPECTION)	Yes	Go to next step.
		No	**Zero or low:** • Inspect fuel pump circuit. • Inspect for open fuel pump relief valve. • Inspect for fuel leakage inside pressure regulator. • Inspect for clogged main fuel line. **High:** • Inspect pressure regulator for high pressure cause. • Inspect for clogged fuel return line.
9	• Is fuel line pressure held after ignition key is turned to OFF?	Yes	Go to next step.
		No	Inspect pressure regulator diaphragm condition. • If condition is okay, inspect fuel injector. • If condition is not okay, replace pressure regulator.
10	• Disconnect vacuum hose from pressure regulator and plug hose. • Start engine. • Does fuel line pressure remain within **0 kPa {0.21 kgf/cm^2, 3.0 psi}** while driving vehicle?	Yes	Go to next step.
		No	Inspect for clogged fuel filter.
11	• Connect vacuum hose to pressure regulator. • Install vacuum gauge to intake manifold. • Start engine. • Does fuel pressure gauge reading increase as vacuum gauge reading decreases and/or fuel pressure gauge reading decrease as vacuum gauge reading increases?	Yes	Go to next step.
		No	Connect vacuum pump to pressure regulator. Start engine. Inspect if fuel pressure gauge reading changes as vacuum changes. • If it changes, inspect vacuum line. • If it does not change, replace pressure regulator.
12	• Disconnect vacuum hose from purge solenoid valve and plug opening end of vacuum hose. • Attempt to start engine. • Is starting condition improved?	Yes	Inspect if purge solenoid valve sticks open.
		No	Go to next step.
13	• Inspect MAF sensor for contamination. • Is there any contamination?	Yes	Replace MAF sensor.
		No	Go to next step.
14	• Inspect for restriction in the exhaust system. • Is there any restriction?	Yes	Inspect exhaust system.
		No	Go to next step.
15	• Inspect engine condition while tapping EGR valve housing. • Does engine condition improve?	Yes	Replace EGR valve.
		No	Go to next step.

STEP	INSPECTION		ACTION
16	• Inspect starting system. (See G–18 STARTER INSPECTION.) • Is starting system normal?	Yes	Inspect for loose connectors or poor terminal contact. • If okay, remove EGR valve and visually inspect for mechanically stuck EGR valve.
		No	Repair or replace components as required.
17	• Verify test results. — If okay, return to diagnostic index to service any additional symptoms. — If malfunction remains, inspect related Service Information and perform repair or diagnosis. • If vehicle is repaired, troubleshooting completed. • If vehicle is not repaired or additional diagnostic information is not available, replace or reprogram PCM.		

End Of Ste

NO.5 ENGINE STALLS-AFTER START/AT IDLE

AME428018881W10

5	Engine stalls—after start/at idle
DESCRIPTION	• Engine stops unexpectedly.
POSSIBLE CAUSE	• A/C system operation is improper • Air leakage from intake-air system parts • Purge solenoid valve malfunction • Improper operation of IAC valve • EGR valve malfunction • No signal from CKP sensor due to sensor or related wire • Vacuum leakage • Low engine compression • Spark leakage from high-tension leads • Poor fuel quality • PCV valve malfunction • Air cleaner restriction • Restriction in exhaust system • Electrical connector disconnection • Open or short circuit in fuel pump body and related harness • No battery power supply to PCM or poor GND • Inadequate fuel pressure • Fuel pump body mechanical malfunction • Fuel leakage from fuel injector • Fuel injector clogging • Immobilizer system and/or circuit malfunction **Warning** • **The following troubleshooting flow chart contains the fuel system diagnosis and repair procedures. Read the following warnings before performing the fuel system services:** **— Fuel vapor is hazardous. It can easily ignite, causing serious injury and damage. Always keep sparks and flames away from fuel.** **— Fuel line spills and leakage are dangerous. Fuel can ignite and cause serious injuries or death and damage. Fuel can also irritate skin and eyes. To prevent this, always complete "BEFORE REPAIR PROCEDURE" and "AFTER REPAIR PROCEDURE" described in this manual.** **(See F4–65 BEFORE REPAIR PROCEDURE.)** **(See F4–65 AFTER REPAIR PROCEDURE.)**

Diagnostic procedure

STEP	INSPECTION		ACTION
1	**Note** • Following test should be performed on vehicles with immobilizer system. Go to Step 12 for vehicles without immobilizer system. • Connect WDS or equivalent to DLC–2. • Do following conditions appear? — Engine is not completely started. — DTC P1624 is displayed.	Yes	**Both conditions appear:** • Go to Step 4.
		No	**Either or other condition appear:** • Go to next step.
2	• Does engine stall **after approx. 2 seconds** since engine is started?	Yes	Go to next step.
		No	Immobilizer system is okay. Go to Step 12.
3	• Is immobilizer unit connector securely connected to immobilizer unit?	Yes	Go to next step.
		No	Connect immobilizer unit connector securely. Return to Step 2.

STEP	INSPECTION		ACTION
4	• Does immobilizer indicator light flash and indicate any of following immobilizer system DTCs? **DTC** **01, 02, 03, 11, 21**	Yes	Go to “ON-BOARD DIAGNOSTIC FUNCTION” of immobilizer system.
		No	Go to next step.
5	• Does immobilizer indicator light illuminate?	Yes	Go to Step 8.
		No	Go to next step.
6	• Does immobilizer indicator light flash and indicate following immobilizer system DTC after **above 135 seconds** after ignition key is turned to ON? **DTC** **24, 30**	Yes	Go to “ON-BOARD DIAGNOSTIC FUNCTION” of immobilizer system.
		No	Go to next step.
7	• Turn ignition key to OFF. • Disconnect immobilizer unit connector. • Connect jumper wire between immobilizer unit connector terminal M and GND. • Turn ignition key to ON (Engine OFF). • Does immobilizer indicator light illuminate?	Yes	Reconnect immobilizer unit connector. Go to next step.
		No	Inspect for open circuit between immobilizer unit connector terminal M and instrument cluster. • If okay, inspect immobilizer indicator light bulb. Repair or replace if necessary. Reconnect immobilizer unit connector, then return to Step 4.
8	• Connect WDS or equivalent to DLC–2 and retrieve DTC. • Is following DTC displayed? **DTC** **P1602, P1603, P1604, P1621, P1622, P1624**	Yes	Go to appropriate DTC test.
		No	Go to next step.
9	• Is there continuity between PCM ground terminals 24/51/76/77/103 and GND?	Yes	Go to next step.
		No	Repair or replace wiring harness.
10	• Turn ignition key to ON (Engine OFF). • Inspect voltage between PCM terminals 71 and 97. • Is voltage **above 11.5 V**?	Yes	Go to next step.
		No	Repair or replace wiring harness.
11	• Disconnect immobilizer unit connector. • Turn ignition key to ON (Engine OFF). • Is there battery voltage at immobilizer unit connector terminal J?	Yes	Inspect for open circuit between PCM connector terminal 59 and immobilizer unit connector terminal A.
		No	Repair or replace wiring harness between immobilizer unit connector terminal J and fuse panel.
12	• Verify following: — Vacuum connection — Air cleaner element — No air leakage from intake-air system — No restriction of intake-air system — Proper sealing of intake manifold and components attached to intake manifold: EGR valve, IAC valve — Ignition wiring — Fuel quality: proper octane, contamination, winter/summer blend — Electrical connections — Smooth operation of throttle valve • Are all items okay?	Yes	Go to next step.
		No	Service as necessary. Repeat Step 12.
13	• Turn ignition key to ON (Engine OFF). • Disconnect TP sensor connector. • Measure voltage at TP sensor connector VREF terminal with ignition key at ON. **Voltage** **4.5—5.5 V** • Is voltage okay?	Yes	Go to next step.
		No	Go to troubleshooting “No.30 Constant voltage”.

F4

STEP	INSPECTION		ACTION
14	• Connect WDS or equivalent to DLC–2. • Turn ignition key to ON (Engine OFF). • Retrieve any DTCs. • Is "PASSED" displayed?	Yes	**No DTC is displayed:** • Go to next step.
		No	**DTC is displayed:** • Go to appropriate DTC test. **Communication error message is displayed:** • Inspect for following: — Open circuit between main relay and PCM terminal 71 or 97 — Open main relay GND circuit — Main relay is stuck open. — Open or poor GND circuit (PCM terminal 24, 51, 76, 77 or 103) — Poor connection of vehicle body GND
15	• Attempt to start engine at part throttle. • Does engine run smoothly at part throttle?	Yes	Inspect IAC valve and wiring harness.
		No	Go to next step.
16	• Connect WDS or equivalent to DLC–2. • Access RPM PID. • Is RPM PID indicating engine speed during engine cranking?	Yes	Go to next step.
		No	Inspect for following: • Open or short circuit in CKP sensor • Open or short circuit between CKP sensor and PCM terminal 21 or 22 • Open or short circuit in CKP sensor harnesses — If CKP sensor and harness are okay, go to next step.
17	• Visually inspect CKP sensor and teeth of crankshaft pulley. • Are CKP sensor and teeth of crankshaft pulley okay?	Yes	Go to next step.
		No	Replace malfunctioning part.
18	• Inspect ignition coils. • Are ignition coils okay?	Yes	Repair or replace ignition coil.
		No	Go to next step.
19	• Is strong blue spark visible at each disconnected ignition coil while cranking engine?	Yes	Go to next step. • If symptom occurs with A/C on, go to Step 15.
		No	Inspect for following: • Open or short circuit in ignition coil • Open circuit between ignition switch and ignition coil • Open circuit between ignition coil and PCM terminal 1, 26, 27, 52, 78 or 82
20	• Inspect spark plug conditions. • Is spark plug wet, covered with carbon or grayish white?	Yes	**Spark plug is wet or covered with carbon:** • Inspect for fuel leakage from injector. **Spark plug is grayish white:** • Inspect for clogged fuel injector.
		No	Install spark plugs on original cylinders. Go to next step.
21	• Remove and shake PCV valve. • Does PCV valve rattle?	Yes	Go to next step.
		No	Replace PCV valve.
22	• Inspect for restriction in the exhaust system. • Is there any restriction?	Yes	Inspect exhaust system.
		No	Go to next step.

STEP	INSPECTION		ACTION
23	• Install fuel pressure gauge between fuel filter and fuel distributor. • Connect jumper wire between F/P terminal at DLC in engine compartment and GND. • Turn ignition key to ON (Engine OFF). • Is fuel line pressure correct with ignition key at ON? (See F4–66 FUEL LINE PRESSURE INSPECTION)	Yes	Go to next step.
		No	**Zero or low:** • Inspect fuel pump circuit. • Inspect for open fuel pump relief valve. • Inspect for fuel leakage inside pressure regulator. • Inspect for clogged main fuel line. **High:** • Inspect pressure regulator for high pressure cause. • Inspect for clogged fuel return line.
24	• Visually inspect for fuel leakage at fuel injector O-ring and fuel line. • Service as necessary. • Does fuel line pressure hold after ignition key is turned to OFF?	Yes	Go to next step.
		No	Inspect pressure regulator diaphragm condition. • If condition is okay, inspect fuel injector. • If condition is not okay, replace pressure regulator.
25	**Note** • Following test is for stall concerns with A/C on. If other symptoms exist, go to next step. • Connect pressure gauges to A/C low and high pressure side lines. • Turn A/C on and measure low side and high side pressure. • Are pressures within specifications?	Yes	Go to next step.
		No	If A/C is always on, go to symptom troubleshooting “No.24 A/C always on/A/C compressor runs continuously”. For other symptoms, inspect following: • Refrigerant charging amount • Condenser fan operation
26	• Disconnect vacuum hose between purge solenoid valve and intake manifold from purge solenoid side. • Plug opening end of vacuum hose. • Start engine. • Is engine stall now eliminated?	Yes	Inspect if purge solenoid valve is stuck open. Inspect EVAP control system.
		No	Go to next step.
27	• Is air leakage felt or heard at intake-air system components while racing engine to higher speed?	Yes	Repair or replace.
		No	Go to next step.
28	• Inspect engine condition while tapping EGR valve housing. • Does engine condition improve?	Yes	Replace EGR valve.
		No	Go to next step.
29	• Is engine compression correct?	Yes	Inspect valve timing.
		No	Inspect for cause.
30	• Verify test results. — If okay, return to diagnostic index to service any additional symptoms. — If malfunction remains, inspect related Service Information and perform repair or diagnosis. • If vehicle is repaired, troubleshooting completed. • If vehicle is not repaired or additional diagnostic information is not available, replace or reprogram PCM.		

End Of Sta

F4

NO.6 CRANKS NORMALLY BUT WILL NOT START

AME428018881W11

6	Cranks normally but will not start
DESCRIPTION	• Starter cranks engine at normal speed but engine will not run. • Refer to symptom troubleshooting “No.5 Engine stalls” if this symptom appears after engine stall. • Fuel in tank. • Battery is in normal condition.
POSSIBLE CAUSE	• No battery power supply to PCM • Air leakage from intake-air system • Open PCM GND or vehicle body GND • Improper operation of IAC valve • EGR valve malfunction • No signal from CKP sensor due to sensor or related wire • No signal from CMP sensor due to sensor or related wire • Low engine compression • Vacuum leakage • Spark leakage from ignition coils • Poor fuel quality • PCV valve malfunction • Air cleaner restriction • Restriction in exhaust system • Disconnected electrical connector • Open or short circuit in fuel pump and related harness • Inadequate fuel pressure • Fuel pump mechanical malfunction • Fuel leakage from injector • Fuel injector clogging • Purge solenoid valve malfunction • Immobilizer system and/or circuit malfunction **Warning** • **The following troubleshooting flow chart contains the fuel system diagnosis and repair procedures. Read the following warnings before performing the fuel system services:** **— Fuel vapor is hazardous. It can easily ignite, causing serious injury and damage. Always keep sparks and flames away from fuel.** **— Fuel line spills and leakage are dangerous. Fuel can ignite and cause serious injuries or death and damage. Fuel can also irritate skin and eyes. To prevent this, always complete “BEFORE REPAIR PROCEDURE” and “AFTER REPAIR PROCEDURE” described in this manual.** **(See F4–65 BEFORE REPAIR PROCEDURE.)** **(See F4–65 AFTER REPAIR PROCEDURE.)**

Diagnostic procedure

STEP	INSPECTION		ACTION
1	**Note** • Following test should be performed on vehicles with immobilizer system. Go to Step 12 for vehicles without immobilizer system. • Connect WDS or equivalent to DLC–2. — Do following conditions appear? — Engine is not completely started. — DTC P1624 is displayed.	Yes	**Both conditions appear:** • Go to Step 4.
		No	**Either or other condition appear:** • Go to next step.
2	• Does engine stall after **approx. 2 seconds** since engine is started?	Yes	Go to next step.
		No	Immobilizer system is okay. Go to Step 12.
3	• Is immobilizer unit connector securely connected to immobilizer unit?	Yes	Go to next step.
		No	Connect immobilizer unit connector securely. Return to Step 2.
4	• Does immobilizer indicator light flash and indicate following immobilizer system DTC? **DTC** **01, 02, 03, 11, 21**	Yes	Go to “ON-BOARD DIAGNOSTIC FUNCTION” of immobilizer system.
		No	Go to next step.
5	• Does immobilizer indicator light illuminate?	Yes	Go to Step 8.
		No	Go to next step.

STEP	INSPECTION		ACTION
6	• Does immobilizer indicator light flash and indicate following immobilizer system DTC after **above 135 seconds** after ignition key is turned to ON (Engine OFF)? **DTC** **24, 30**	Yes	Go to "ON-BOARD DIAGNOSTIC FUNCTION" of immobilizer system.
		No	Go to next step.
7	• Turn ignition key to OFF. • Disconnect immobilizer unit connector. • Connect jumper wire between immobilizer unit connector terminal M and GND. • Turn ignition switch to ON (Engine OFF). • Does immobilizer indicator light illuminate?	Yes	Reconnect immobilizer unit connector. Go to next step.
		No	Inspect for open circuit between immobilizer unit connector terminal M and instrument cluster. • If okay, inspect immobilizer indicator light bulb. Repair or replace if necessary. Reconnect immobilizer unit connector, then return to Step 4.
8	• Connect WDS or equivalent to DLC and retrieve DTC. • Is following DTC displayed? **DTC** **P1602, P1603, P1604, P1621, P1622, P1624**	Yes	Go to appropriate DTC test.
		No	Go to next step.
9	• Is there continuity between PCM ground terminals 24/51/76/77/103 and GND?	Yes	Go to next step.
		No	Repair or replace wiring harness.
10	• Turn ignition key to ON (Engine OFF). • Inspect voltage between PCM terminals 71 and 97. • Is voltage **above 11.5 V**?	Yes	Go to next step.
		No	Repair or replace wiring harness.
11	• Disconnect immobilizer unit connector. • Turn ignition key to ON (ENgine OFF). • Is there battery voltage at immobilizer unit connector terminal J?	Yes	Inspect for open circuit between PCM connector terminal 59 and immobilizer unit connector terminal A.
		No	Repair or replace wiring harness between immobilizer unit connector terminal J and fuse panel.
12	• Verify following: — Vacuum connection — External fuel shut off or accessory (kill switch, alarm etc.) — Fuel quality: proper octane, contamination, winter/summer blend — No air leakage from intake-air system — Proper sealing of intake manifold and components attached to intake manifold: EGR valve, IAC valve — Ignition wiring — Electrical connections — Fuses — Smooth operation of throttle valve • Are all items okay?	Yes	Go to next step.
		No	Service as necessary. Repeat Step 12.
13	• Connect WDS or equivalent to DLC–2. • Turn ignition key to ON (Engine OFF). • Retrieve any DTCs. • Is "PASSED" displayed?	Yes	**No DTC is displayed:** • Go to next step.
		No	**DTC is displayed:** • Go to appropriate DTC test. **Communication error message is displayed:** • Inspect for following: — Open circuit between main relay and PCM terminal 71 or 97 — Open main relay GND circuit — Main relay is stuck open. — Open or poor GND circuit (PCM terminal 24, 51, 76, 77 or 103) — Poor connection of vehicle body GND
14	• Turn ignition key to ON (Engine OFF). • Disconnect TP sensor connector. • Measure voltage at TP sensor connector VREF terminal with ignition key at ON. **Voltage** **4.5—5.5 V** • Is voltage okay?	Yes	Go to next step.
		No	Go to troubleshooting "No.29 Constant voltage." (See F4–292 NO.29 CONSTANT VOLTAGE.)
15	• Will engine start and run smoothly at part throttle?	Yes	Inspect IAC valve and wiring harness.
		No	Go to next step.

F4

STEP	INSPECTION		ACTION
16	• Connect WDS or equivalent to DLC–2. • Access RPM PID. • Is RPM PID indicating engine speed when cranking engine?	Yes	Go to next step.
		No	Inspect for following: • Open or short circuit in CKP sensor • Open or short circuit between CKP sensor and PCM terminal 21 or 22 • Open or short circuit in CKP sensor harnesses — If CKP sensor and harness are okay, go to next step.
17	• Visually inspect CKP sensor and teeth of crankshaft pulley. • Are CKP sensor and teeth of crankshaft pulley okay?	Yes	Go to next step.
		No	Replace malfunctioning part.
18	• Inspect ignition coils. • Are ignition coils okay?	Yes	Repair or replace ignition coil.
		No	Go to next step.
19	• Is strong blue spark visible at each disconnected ignition coil while cranking engine?	Yes	Go to next step.
		No	Inspect for following: • Open or short circuit in ignition coil • Open circuit between ignition switch and ignition coil • Open circuit between ignition coil and PCM terminal 1, 26, 27, 52, 78 or 82
20	• Inspect spark plug conditions. • Is spark plug wet, covered with carbon or grayish white?	Yes	**Spark plug is wet or covered with carbon:** • Inspect for fuel leakage from injector. **Spark plug is grayish white:** • Inspect for clogged fuel injector.
		No	Install spark plugs on original cylinders. Go to next step.
21	• Remove and shake PCV valve. • Does PCV valve rattle?	Yes	Go to next step.
		No	Replace PCV valve.
22	• Inspect for restriction in the exhaust system. • Is there any restriction?	Yes	Inspect exhaust system.
		No	Go to next step.
23	• Install fuel pressure gauge between pulsation damper and fuel distributor. • Connect jumper wire between F/P terminal at DLC in engine compartment and GND. • Turn ignition key to ON (Engine OFF). • Is fuel line pressure correct when ignition switch is cycled ON/OFF five times? (See F4–66 FUEL LINE PRESSURE INSPECTION)	Yes	Go to next step.
		No	**Zero or low:** • Inspect fuel pump circuit. • Inspect for open fuel pump relief valve. • Inspect for fuel leakage inside pressure regulator. • Inspect for clogged main fuel line. **High:** • Inspect pressure regulator for high pressure cause. • Inspect for clogged fuel return line.
24	• Visually inspect for fuel leakage at fuel injector O-ring and fuel line. • Service as necessary. • Is fuel line pressure held after ignition key is turned to OFF?	Yes	Go to next step.
		No	Inspect pressure regulator diaphragm condition. • If condition is okay, inspect fuel injector. • If condition is not okay, replace pressure regulator.
25	• Disconnect vacuum hose between purge solenoid valve and intake manifold from purge solenoid valve side. • Plug opening end of vacuum hose. • Attempt to start engine. • Is starting condition improved?	Yes	Inspect if purge solenoid valve is stuck open mechanically. Inspect EVAP control system.
		No	Go to next step.
26	• Is air leakage felt or heard at intake-air system components while racing engine to higher speed?	Yes	Repair or replace.
		No	Go to next step.
27	• Inspect engine condition while tapping EGR valve housing. • Does engine condition improve?	Yes	Replace EGR valve.
		No	Go to next step.
28	• Is engine compression correct?	Yes	Inspect valve timing.
		No	Inspect for causes.
29	• Verify test results. — If okay, return to diagnostic index to service any additional symptoms. — If malfunction remains, inspect related Service Information and perform repair or diagnosis. • If vehicle is repaired, troubleshooting completed. • If vehicle is not repaired or additional diagnostic information is not available, replace or reprogram PCM.		

NO.7 SLOW RETURN TO IDLE

AME428018881W12

7	Slow return to idle
DESCRIPTION	• Engine takes more time than normal to return to idle speed.
POSSIBLE CAUSE	• ECT sensor malfunction • Thermostat is stuck open. • Throttle body malfunction • Air leakage from intake-air system

Diagnostic procedure

STEP	INSPECTION		ACTION
1	• Connect WDS or equivalent to DLC–2. • Turn ignition key to ON (Engine OFF). • Retrieve any DTCs. • Is “PASSED” displayed?	Yes	**No DTC is displayed:** • Go to next step.
		No	**DTC is displayed:** • Go to appropriate DTC test.
2	• Remove thermostat and inspect operation. (See E–16 THERMOSTAT REMOVAL/INSTALLATION.) (See E–17 THERMOSTAT INSPECTION.) • Is thermostat okay?	Yes	ECT and thermostat are okay. Go to next step.
		No	Access ECT PID. Inspect for both ECT PID and temperature gauge on instrument cluster readings. • If temperature gauge on instrument cluster indicates normal range but ECT PID is not same as temperature gauge reading, inspect ECT sensor. • If temperature gauge on instrument cluster indicates cold range but ECT PID is normal, inspect temperature gauge and heat gauge unit.
3	• Is throttle body free of contaminations?	Yes	Inspect for air leakage from intake-air system components while racing engine to higher speed.
		No	Clean or replace throttle body.
4	• Verify test results. — If okay, return to diagnostic index to service any additional symptoms. — If malfunction remains, inspect related Service Information and perform repair or diagnosis. • If vehicle is repaired, troubleshooting completed. • If vehicle is not repaired or additional diagnostic information is not available, replace or reprogram PCM.		

End Of Sie

NO.8 ENGINE RUNS ROUGH/ROLLING IDLE

AME428018881W13

8	Engine runs rough/rolling idle
DESCRIPTION	• Engine speed fluctuates between specified idle speed and lower speed and engine shakes excessively. • Idle speed is too slow and engine shakes excessively.
POSSIBLE CAUSE	• Air leakage from intake-air system parts • A/C system improper operation • Spark leakage from ignition coils • Purge solenoid valve malfunction • IAC valve improper operation • EGR valve malfunction • Erratic or no signal from CMP sensor • Low engine compression • Erratic signal from CKP sensor • Poor fuel quality • PCV valve malfunction • Air cleaner restriction • Restriction in exhaust system • Disconnected electrical connectors • Inadequate fuel pressure • Fuel pump mechanical malfunction • Fuel leakage from fuel injector • Fuel injector clogging • Engine overheating • Vacuum leakage **Warning** • **The following troubleshooting flow chart contains the fuel system diagnosis and repair procedures. Read the following warnings before performing the fuel system services:** **— Fuel vapor is hazardous. It can easily ignite, causing serious injury and damage. Always keep sparks and flames away from fuel.** **— Fuel line spills and leakage are dangerous. Fuel can ignite and cause serious injuries or death and damage. Fuel can also irritate skin and eyes. To prevent this, always complete "BEFORE REPAIR PROCEDURE" and "AFTER REPAIR PROCEDURE" described in this manual.** **(See F4–65 BEFORE REPAIR PROCEDURE.)** **(See F4–65 AFTER REPAIR PROCEDURE.)**

Diagnostic procedure

STEP	INSPECTION		ACTION
1	• Verify following: — External fuel shut off or accessory (kill switch, alarm etc.) — Fuel quality: proper octane, contamination, winter/summer blend — No air leakage from intake-air system — Proper sealing of intake manifold and components attached to intake manifold: EGR valve, IAC valve — Ignition wiring — Electrical connections — Fuses — Smooth operation of throttle valve • Are all items okay?	Yes	Go to next step.
		No	Service as necessary. Repeat Step 1.
2	• Connect WDS or equivalent to DLC–2. • Turn ignition key to ON (Engine OFF). • Retrieve any DTCs. • Is "PASSED" displayed?	Yes	**No DTC is displayed:** • Go to next step.
		No	**DTC is displayed:** • Go to appropriate DTC test.
3	• Is engine overheating?	Yes	Go to symptom troubleshooting "No.17 Cooling system concerns — Overheating".
		No	Go to next step.

STEP	INSPECTION		ACTION
4	**Note** • Following test is for engine running rough idle with A/C on concerns. If other symptoms exist, go to next step. • Connect pressure gauge to A/C low and high pressure side lines. • Start engine and run it at idle. • Turn A/C switch on. • Measure low side and high side pressures. • Are reading pressures within specifications?	Yes	Go to next step.
		No	If A/C is always on, go to symptom troubleshooting “No.24 A/C always on/A/C compressor runs continuously”. For other symptoms, inspect following: • Refrigerant charging amount • Condenser fan operation
5	**Note** • Following test is for engine running rough with P/S on. If other symptoms exist, go to next step. • Start engine and run it at idle. • Access PSP SW PID. • Inspect if PSP SW PID is ON while turning steering wheel right to left. • Is PSP SW PID okay?	Yes	Inspect power steering pressure switch operation and wiring harness between power steering pressure switch connector and PCM connector terminal 31.
		No	Go to next step.
6	• Visually inspect CKP sensor and teeth of crankshaft pulley. • Are CKP sensor and teeth of crankshaft pulley okay?	Yes	Go to next step.
		No	Replace malfunctioning part.
7	• Inspect ignition coils. • Are ignition coils okay?	Yes	Repair or replace ignition coil.
		No	Go to next step.
8	• Inspect spark plug conditions. • Is spark plug wet, covered with carbon or grayish white?	Yes	**Spark plug is wet or covered with carbon:** • Inspect for fuel leakage from injector. **Spark plug is grayish white:** • Inspect for clogged fuel injector.
		No	Install spark plugs on original cylinders. Go to next step.
9	• Start engine and disconnect IAC valve connector. • Does rpm drop or engine stall?	Yes	Go to next step.
		No	Inspect IAC valve and wiring harness.
10	• Install fuel pressure gauge between pulsation damper and fuel distributor. • Start engine and run it at idle. • Measure fuel line pressure at idle. • Is fuel line pressure correct at idle? (See F4–66 FUEL LINE PRESSURE INSPECTION)	Yes	Go to next step.
		No	**Zero or low:** • Inspect fuel pump circuit. • Inspect for open fuel pump relief valve. • Inspect for fuel leakage inside pressure regulator. • Inspect for clogged main fuel line. **High:** • Inspect pressure regulator for high pressure cause. • Inspect for clogged fuel return line.
11	• Visually inspect for fuel leakage at fuel injector, O-ring, and fuel line. • Service as necessary. • Does fuel line pressure hold after ignition key is turned to OFF?	Yes	Go to next step.
		No	Inspect pressure regulator diaphragm condition. • If condition is okay, inspect fuel injector. • If condition is not okay, replace pressure regulator.
12	• Connect WDS or equivalent to DLC–2. • Start the engine and run it at idle. • Access LONGFT1 and LONGFT2 PID. • Measure LONGFT1 and LONGFT2 PID at idle. • Is PID value **within -15% — +15%**?	Yes	Go to next step.
		No	LONGFT1 and LONGFT2 PID is out of specification. **Below specification (too rich):** • Inspect EVAP control system. — If system is okay, go to Step 14. **Above specification (too lean):** • Inspect for air leakage at intake-air system components. — If system okay, go to next step.
13	• Disconnect vacuum hose between purge solenoid valve and intake manifold from purge solenoid valve side. • Plug opening end of vacuum hose. • Start engine. • Does engine condition improve?	Yes	Inspect if purge solenoid valve sticks open mechanically. Inspect EVAP control system.
		No	Go to next step.

STEP	INSPECTION		ACTION
14	• Remove and shake PCV valve. • Does PCV valve rattle?	Yes	Go to next step.
		No	Replace PCV valve.
15	• Inspect for restriction in the exhaust system. • Is there any restriction?	Yes	Inspect exhaust system.
		No	Go to next step.
16	• Visually inspect CMP sensor and tooth of camshaft. • Are CMP sensor and tooth of camshaft okay?	Yes	Go to next step.
		No	Replace malfunctioning part.
17	• Inspect engine condition while tapping EGR valve housing. • Does engine condition improve?	Yes	Replace EGR valve.
		No	Go to next step.
18	• Is engine compression correct?	Yes	Inspect valve timing.
		No	Inspect for causes.
19	• Verify test results. — If okay, return to diagnostic index to service any additional symptoms. — If malfunction remains, inspect related Service Information and perform repair or diagnosis. • If vehicle is repaired, troubleshooting completed. • If vehicle is not repaired or additional diagnostic information is not available, replace or reprogram PCM.		

End Of Sie

NO.9 FAST IDLE/RUNS ON

AME428018881W14

9	Fast idle/runs on
DESCRIPTION	• Engine speed continues at fast idle after warm-up. • Engine runs after ignition key is turned to OFF.
POSSIBLE CAUSE	• ECT sensor malfunction • Air leakage from intake-air system • Throttle body malfunction • Accelerator cable free play misadjustment • Cruise control cable misadjustment

Diagnostic procedure

STEP	INSPECTION		ACTION
1	• Connect WDS or equivalent to DLC–2. • Access ECT PID. • Start and warm up engine to normal operating temperature. • Is ECT PID reading between **82—112 °C {180—234 °F}**?	Yes	Go to next step.
		No	**ECT PID is above 112 °C {234 °F}:** • Go to symptom troubleshooting “No.17 Cooling system concerns—Overheating”. **ECT PID is below 82 °C {180 °F}:** • Go to symptom troubleshooting “No.18 Cooling system concerns—Runs cold”.
2	• Connect WDS or equivalent to DLC–2. • Turn ignition key to ON (Engine OFF). • Retrieve any DTCs. • Is “PASSED” displayed?	Yes	**No DTC is displayed:** • Go to next step.
		No	**DTC is displayed:** • Go to appropriate DTC test.
3	• Is there air leakage felt or heard at intake-air system components while racing engine to higher speed?	Yes	Repair or replace parts as necessary.
		No	Inspect for accelerator cable free play. (See F4–64 ACCELERATOR CABLE INSPECTION.)
4	• Verify test results. — If okay, return to diagnostic index to service any additional symptoms. — If malfunction remains, inspect related Service Information and perform repair or diagnosis. • If vehicle is repaired, troubleshooting completed. • If vehicle is not repaired or additional diagnostic information is not available, replace or reprogram PCM.		

End Of Sie

NO.10 LOW IDLE/STALLS DURING DECELERATION

AME428018881W15

10	Low idle/stalls during deceleration
DESCRIPTION	• Engine stops unexpectedly at beginning of deceleration or recovery from deceleration.
POSSIBLE CAUSE	• Vacuum leakage • IAC valve malfunction • Air leakage from intake-air system • TP sensor or related circuit malfunction • MAF sensor or related circuit malfunction • Brake switch or related circuit malfunction

Diagnostic procedure

STEP	INSPECTION		ACTION
1	• Does engine idle rough?	Yes	Go to symptom troubleshooting “No.8 Engine runs rough/ rolling idle”.
		No	Go to next step.
2	• Verify following: — Proper routing and no damage of vacuum lines — IAC valve properly connected — No air leakage from intake-air system • Are all items okay?	Yes	Go to next step.
		No	Service as necessary. Repeat Step 2.
3	• Connect WDS or equivalent to DLC–2. • Turn ignition key to ON (Engine OFF). • Retrieve any DTC. • Is “PASSED” displayed?	Yes	**No DTC is displayed:** • Go to next step.
		No	**DTC is displayed:** • Go to appropriate DTC test.
4	• Does idle speed drop or stall when disconnecting IAC valve?	Yes	Go to next step.
		No	Inspect following: • Circuit from IAC valve to PCM connector terminal 54 or 83 for open and short • IAC valve for sticking — If okay, go to next step.
5	• Disconnect vacuum hose between purge solenoid valve and intake manifold from purge solenoid valve side. • Plug opening end of vacuum hose. • Drive vehicle. • Does engine condition improve?	Yes	Inspect EVAP control system.
		No	Go to next step.
6	• Connect WDS or equivalent to DLC–2. • Access TP, MAF and VSS PIDs. • Monitor each PID while driving vehicle. (See F4–91 PCM Inspection Using the SST (WDS or equivalent).) • Are PIDs okay?	Yes	Intermittent concern exists. (See F4–247 INTERMITTENT CONCERN TROUBLESHOOTING.)
		No	**TP PID:** • Inspect TP sensor. **MAF PID:** • Inspect MAF sensor. **VSS PID:** • Inspect VSS.
7	• Verify test results. — If okay, return to diagnostic index to service any additional symptoms. — If malfunction remains, inspect related Service Information and perform repair or diagnosis. • If vehicle is repaired, troubleshooting completed. • If vehicle is not repaired or additional diagnostic information is not available, replace or reprogram PCM.		

End Of Ste

NO.11 ENGINE STALLS/QUITS, ENGINE RUNS ROUGH, MISSES, BUCK/JERK, HESITATION/STUMBLE, SURGES

AME428018881W16

11	**Engine stalls/quits—acceleration/cruise** **Engine runs rough—acceleration/cruise** **Misses—acceleration/cruise** **Buck/jerk—acceleration/cruise/deceleration** **Hesitation/stumble—acceleration** **Surges—acceleration/cruise**
DESCRIPTION	• Engine stops unexpectedly at beginning of acceleration or during acceleration. • Engine stops unexpectedly while cruising. • Engine speed fluctuates during acceleration or cruising. • Engine misses during acceleration or cruising. • Vehicle bucks/jerks during acceleration, cruising or deceleration. • Momentary pause at beginning of acceleration or during acceleration • Momentary minor irregularity in engine output
POSSIBLE CAUSE	• A/C system improper operation • Erratic signal or no signal from CMP sensor • Air leakage from intake-air system parts • Purge solenoid valve malfunction • IAC valve improper operation • EGR valve malfunction • Erratic signal from CKP sensor • Low engine compression • Vacuum leakage • Poor fuel quality • Spark leakage from high-tension leads • Air cleaner restriction • PCV valve malfunction • Improper valve timing due to jumping out of timing belt • Restriction in exhaust system • Intermittent open or short in fuel pump circuit • Inadequate fuel pressure • Fuel pump mechanical malfunction • Fuel leakage from fuel injector • Fuel injector clogging • Intermittent open or short of MAF sensor, TP sensor and VSS • ATX malfunction **Warning** • **The following troubleshooting flow chart contains the fuel system diagnosis and repair procedures. Read the following warnings before performing the fuel system services:** **— Fuel vapor is hazardous. It can easily ignite, causing serious injury and damage. Always keep sparks and flames away from fuel.** **— Fuel line spills and leakage are dangerous. Fuel can ignite and cause serious injuries or death and damage. Fuel can also irritate skin and eyes. To prevent this, always complete "BEFORE REPAIR PROCEDURE" and "AFTER REPAIR PROCEDURE" described in this manual.** **(See F4–65 BEFORE REPAIR PROCEDURE.)** **(See F4–65 AFTER REPAIR PROCEDURE.)**

Diagnostic procedure

STEP	INSPECTION		ACTION
1	• Verify following: — Vacuum connection — Air cleaner element — No air leakage from intake-air system — No restriction of intake-air system — Proper sealing of intake manifold and components attached to intake manifold: EGR valve, IAC valve — Ignition wiring — Fuel quality: proper octane, contamination, winter/summer blend — Electrical connections — Smooth operation of throttle valve • Are all items okay?	Yes	Go to next step.
		No	Service as necessary. Repeat Step 1.

STEP	INSPECTION		ACTION
2	• Connect WDS or equivalent DLC–2. • Turn ignition key to ON (Engine OFF). • Retrieve any DTCs. • Is “PASSED” displayed?	Yes	**No DTC is displayed:** • Go to next step.
		No	**DTC is displayed:** • Go to appropriate DTC test.
3	• Is engine overheating?	Yes	Go to symptom troubleshooting “No.17 Cooling system concerns—Overheating”.
		No	Go to next step.
4	• Connect WDS or equivalent to DLC–2. • Access RPM, MAF and TP PIDs. • Drive vehicle with monitoring PIDs. • Are PIDs within specification? (See F4–91 PCM Inspection Using the SST (WDS or equivalent).)	Yes	Go to next step.
		No	**RPM PID:** • Inspect CKP sensor and related harness for vibration and/or intermittent open/short circuit. **MAF PID:** • Inspect for open circuit of MAF sensor and related wire harness intermittently. **TP PID:** • Inspect if output signal from TP sensor changes smoothly. **VSS PID:** • Inspect for open circuit of VSS and related wire harness intermittently.
5	• Visually inspect CKP sensor and teeth of crankshaft pulley. • Are CKP sensor and teeth of crankshaft pulley okay?	Yes	Go to next step.
		No	Replace malfunctioning part.
6	• Inspect spark plug conditions. • Is spark plug wet, covered with carbon or grayish white?	Yes	**Spark plug is wet or covered with carbon:** • Inspect for fuel leakage from fuel injector. **Spark plug is grayish white:** • Inspect for clogged fuel injector.
		No	Install spark plugs on original cylinders. Go to next step.
7	• Remove and shake PCV valve. • Does PCV valve rattle?	Yes	Go to next step.
		No	Replace PCV valve.
8	• Inspect that throttle lever is resting on throttle valve stop screw and/or throttle valve orifice plug. • Is lever in correct position?	Yes	Go to next step.
		No	Replace throttle valve body.
9	• Inspect for restriction in the exhaust system. • Is there any restriction?	Yes	Inspect exhaust system.
		No	Go to next step.
10	• Install fuel pressure gauge between pulsation damper and fuel distributor. • Connect jumper wire between F/P terminal at DLC in engine compartment and GND. • Turn ignition key to ON (Engine OFF). • Is fuel line pressure correct with ignition key at ON? (See F4–66 FUEL LINE PRESSURE INSPECTION)	Yes	Go to next step.
		No	**Zero or low:** • Inspect fuel pump circuit. • Inspect for open fuel pump relief valve. • Inspect for fuel leakage inside pressure regulator. • Inspect for clogged main fuel line. **High:** • Inspect pressure regulator for high pressure cause. • Inspect for clogged fuel return line.
11	• Visually inspect for fuel leakage at fuel injector O-ring and fuel line. • Service as necessary. • Does fuel line pressure hold after ignition key is turned OFF? (See F4–66 FUEL LINE PRESSURE INSPECTION)	Yes	Go to next step.
		No	Inspect pressure regulator diaphragm condition. • If condition is okay, inspect fuel injector. • If condition is not okay, replace pressure regulator.

STEP	INSPECTION		ACTION
12	**Note** • Following test is for engine stall with A/C on. If other symptom exists, go to next step. • Connect a pressure gauge to A/C low and high pressure side lines. • Turn A/C on and measure low side and high side pressures. • Are pressures within specifications?	Yes	Go to next step.
		No	If A/C is always on, go to symptom troubleshooting “No.24 A/C always on/A/C compressor runs continuously”. For other symptoms, inspect following: • Refrigerant charging amount • Condenser fan operation
13	**Note** • Following test is performed for symptom with cruise control on. If other symptom exists, go to next step. • Inspect cruise control system. • Is cruise control system okay?	Yes	Go to next step.
		No	Repair or replace malfunctioning part.
14	• Disconnect vacuum hose between purge solenoid valve and intake manifold from purge solenoid valve side. • Plug opening end of vacuum hose. • Drive vehicle. • Does engine condition improve?	Yes	Inspect if purge solenoid valve is stuck open mechanically. Inspect EVAP control system.
		No	Go to next step.
15	• Visually inspect CMP sensor and projections of camshaft pulley. • Are CMP sensor and projections of camshaft pulley okay?	Yes	Go to next step.
		No	Replace malfunctioning parts.
16	• Inspect EGR system. • Is EGR system okay?	Yes	Go to next step.
		No	Replace malfunctioning parts.
17	• Is engine compression correct?	Yes	Inspect following: • Valve timing • Internal transaxle part
		No	Inspect for cause.
18	• Verify test results. — If okay, return to diagnostic index to service any additional symptoms. — If malfunction remains, inspect related Service Information and perform repair or diagnosis. • If vehicle is repaired, troubleshooting completed. • If vehicle is not repaired or additional diagnostic information is not available, replace or reprogram PCM.		

End Of Ste

NO.12 LACK/LOSS OF POWER-ACCELERATION/CRUISE

AME428018881W17

12	Lack/loss of power—acceleration/cruise
DESCRIPTION	• Performance is poor under load (e.g. power down when climbing hills).
POSSIBLE CAUSE	• Improper A/C system operation • Erratic signal or no signal from CMP sensor • Air leakage from intake-air system parts • IMCC malfunction • Purge control solenoid malfunction • EGR valve malfunction • Brake dragging • Erratic signal from CKP sensor • Low engine compression • Vacuum leakage • Poor fuel quality • Spark leakage from ignition coils • Air cleaner restriction • PCV valve malfunction • Improper valve timing due to jumping out of timing belt • Restriction in exhaust system • Intermittent open or short in fuel pump circuit • Inadequate fuel pressure • Fuel pump mechanical malfunction • Fuel leakage from fuel injector • Fuel injector clogging • Intermittent open or short of MAF sensor, TP sensor and VSS • ATX malfunction **Warning** • **The following troubleshooting flow chart contains the fuel system diagnosis and repair procedures. Read the following warnings before performing the fuel system services:** **— Fuel vapor is hazardous. It can easily ignite, causing serious injury and damage. Always keep sparks and flames away from fuel.** **— Fuel line spills and leakage are dangerous. Fuel can ignite and cause serious injuries or death and damage. Fuel can also irritate skin and eyes. To prevent this, always complete "BEFORE REPAIR PROCEDURE" and "AFTER REPAIR PROCEDURE" described in this manual.** **(See F4–65 BEFORE REPAIR PROCEDURE.)** **(See F4–65 AFTER REPAIR PROCEDURE.)**

F4

Diagnostic procedure

STEP	INSPECTION		ACTION
1	• Verify following: — Vacuum connection — Air cleaner element — No air leakage from intake-air system — No restriction of intake-air system — Proper sealing of intake manifold and components attached to intake manifold: EGR valve, IAC valve — Fuel quality: proper octane, contamination, winter/summer blend • Are all items okay?	Yes	Go to next step.
		No	Service as necessary. Repeat Step 1.
2	• Connect WDS or equivalent to DLC–2. • Turn ignition key to ON (Engine OFF). • Retrieve any DTCs. • Is "PASSED" displayed?	Yes	**No DTC is displayed:** • Go to next step.
		No	**DTC is displayed:** • Go to appropriate DTC test.
3	Is engine overheating?	Yes	Go to symptom troubleshooting "No.17 Cooling system concerns—Overheating".
		No	Go to next step.

STEP	INSPECTION		ACTION
4	• Connect WDS or equivalent to DLC–2. • Access RPM, MAF, TP and VSS PIDs. • Drive vehicle with monitoring PIDs. • Are PIDs within specification? (See F4–91 PCM Inspection Using the SST (WDS or equivalent).)	Yes	Go to next step.
		No	**RPM PID:** • Inspect CKP sensor and related harness for vibration and/or intermittent open/short circuit. **MAF PID:** • Inspect for intermittent open circuit of MAF sensor and related wire harness. **TP PID:** • Inspect if TP sensor output increases smoothly. **VSS PID:** • Inspect for intermittent open circuit of VSS and related wire harness.
5	• Visually inspect CKP sensor and teeth of crankshaft pulley. • Are CKP sensor and teeth of crankshaft pulley okay?	Yes	Go to next step.
		No	Replace malfunctioning part.
6	• Inspect spark plug conditions. • Is spark plug wet, covered with carbon or grayish white?	Yes	**Spark plug is wet or covered with carbon:** • Inspect for fuel leakage from fuel injector. **Spark plug is grayish white:** • Inspect for clogged fuel injector.
		No	Install spark plugs on original cylinders. Go to next step.
7	• Remove and shake PCV valve. • Does PCV valve rattle?	Yes	Go to next step.
		No	Replace PCV valve.
8	• Inspect for restriction in the exhaust system. • Is there any restriction?	Yes	Inspect exhaust system.
		No	Go to next step.
9	• Install fuel pressure gauge between pulsation damper and fuel distributor. • Connect jumper wire between F/P terminal at DLC in engine compartment and GND. • Turn ignition key to ON (Engine OFF). • Is fuel line pressure correct with ignition key at ON? (See F4–66 FUEL LINE PRESSURE INSPECTION)	Yes	Go to next step.
		No	**Zero or low:** • Inspect fuel pump circuit. • Inspect for open fuel pump relief valve. • Inspect for fuel leakage inside pressure regulator. • Inspect for clogged main fuel line. **High:** • Inspect pressure regulator for high pressure cause. • Inspect for clogged fuel return line.
10	• Inspect IMCC operation. • Does IMCC work properly?	Yes	Go to next step.
		No	Repair or replace malfunctioning part.
11	**Note** • Following test is for engine stall with A/C on concern. If other symptom exists, go to next step. • Connect pressure gauge to A/C low and high side pressure lines. • Turn A/C on and measure low side and high side pressures. • Are pressure within specifications?	Yes	Go to next step.
		No	If A/C is always on, go to symptom troubleshooting “No.24 A/C always on/A/C compressor runs continuously”. For other symptoms, inspect following: • Refrigerant charging amount • Condenser fan operation
12	• Inspect A/C cut-off operation. • Does A/C cut-off work properly?	Yes	Go to next step.
		No	Inspect A/C cut-off system components.
13	• Disconnect vacuum hose between purge solenoid valve and intake manifold from purge solenoid valve side. • Plug opening end of vacuum hose. • Drive vehicle. • Does engine condition improve?	Yes	Inspect if purge solenoid valve is stuck open mechanically. Inspect EVAP control system.
		No	Go to next step.
14	• Visually inspect CMP sensor and projections of camshaft pulley. • Are CMP sensor and projections of camshaft pulley okay?	Yes	Go to next step.
		No	Replace malfunctioning part.
15	• Inspect EGR system. • Is EGR system okay?	Yes	Go to next step.
		No	Replace malfunctioning part.

STEP	INSPECTION		ACTION
16	• Is engine compression correct?	Yes	Inspect following: • Valve timing • Internal transaxle components • Brake system for dragging
		No	Inspect for cause.
17	• Verify test results. — If okay, return to diagnostic index to service any additional symptoms. — If malfunction remains, inspect related Service Information and perform repair or diagnosis. • If vehicle is repaired, troubleshooting completed. • If vehicle is not repaired or additional diagnostic information is not available, replace or reprogram PCM.		

End Of Sie

NO.13 KNOCKING/PINGING-ACCELERATION/CRUISE

AME428018881W18

13	Knocking/pinging—acceleration/cruise
DESCRIPTION	• Sound is produced when air/fuel mixture is ignited by something other than spark plug (e.g. hot spot in combustion chamber).
POSSIBLE CAUSE	• Engine overheating due to cooling system malfunction • ECT sensor malfunction • IAT sensor malfunction • Inadequate engine compression • Inadequate fuel pressure • Knock sensor and related circuit malfunction **Warning** • **The following troubleshooting flow chart contains the fuel system diagnosis and repair procedures. Read the following warnings before performing the fuel system services:** **— Fuel vapor is hazardous. It can easily ignite, causing serious injury and damage. Always keep sparks and flames away from fuel.** **— Fuel line spills and leakage are dangerous. Fuel can ignite and cause serious injuries or death and damage. Fuel can also irritate skin and eyes. To prevent this, always complete "BEFORE REPAIR PROCEDURE" and "AFTER REPAIR PROCEDURE" described in this manual.** **(See F4–65 BEFORE REPAIR PROCEDURE.)** **(See F4–65 AFTER REPAIR PROCEDURE.)**

Diagnostic procedure

STEP	INSPECTION		ACTION
1	• Connect WDS or equivalent to DLC–2. • Access ECT PID. • Verify ECT PID is **below 116 °C {241 °F}** during driving. • Is ECT PID below specification?	Yes	Go to next step.
		No	Inspect cooling system for cause of overheating.
2	• Connect WDS or equivalent to DLC–2. • Turn ignition key to ON (Engine OFF). • Retrieve any DTCs. • Is "PASSED" displayed?	Yes	**No DTC is displayed:** • Go to next step.
		No	**DTC is displayed:** • Go to appropriate DTC test.
3	• Is engine compression correct?	Yes	Go to next step.
		No	Inspect for cause.
4	• Install fuel pressure gauge between pulsation damper and fuel distributor. • Start engine and run it at idle. • Measure fuel line pressure at idle. • Is fuel line pressure correct at idle? (See F4–66 FUEL LINE PRESSURE INSPECTION)	Yes	Go to next step.
		No	**Zero or low:** • Inspect fuel pump circuit. • Inspect for open fuel pump relief valve. • Inspect for fuel leakage inside pressure regulator. • Inspect for clogged main fuel line. **High:** • Inspect pressure regulator for high pressure cause. • Inspect for clogged fuel return line.
5	• Inspect knock sensor. (See F4–103 KNOCK SENSOR INSPECTION.) • Is knock sensor okay?	Yes	Inspect ignition timing.
		No	Replace knock sensor.

F4

STEP	INSPECTION	ACTION
6	• Verify test results. — If okay, return to diagnostic index to service any additional symptoms. — If malfunction remains, inspect related Service Information and perform repair or diagnosis. • If vehicle is repaired, troubleshooting completed. • If vehicle is not repaired or additional diagnostic information is not available, replace or reprogram PCM.	

End Of Ste

NO.14 POOR FUEL ECONOMY

AME428018881W19

14	Poor fuel economy
DESCRIPTION	• Fuel economy is unsatisfactory.
POSSIBLE CAUSE	• Contaminated air cleaner element • IMCC malfunction • Engine cooling system malfunction • Improper ATF level • Weak spark • Poor fuel quality • Erratic or no signal from CMP sensor • Improper coolant level • Inadequate fuel pressure • Spark plug malfunction • PCV valve malfunction • Brake dragging • Improper valve timing due to jumping out of timing belt • Contaminated MAF sensor • Improper engine compression • Exhaust system clogging **Warning** • **The following troubleshooting flow chart contains the fuel system diagnosis and repair procedures. Read the following warnings before performing the fuel system services:** **— Fuel vapor is hazardous. It can easily ignite, causing serious injury and damage. Always keep sparks and flames away from fuel.** **— Fuel line spills and leakage are dangerous. Fuel can ignite and cause serious injuries or death and damage. Fuel can also irritate skin and eyes. To prevent this, always complete "BEFORE REPAIR PROCEDURE" and "AFTER REPAIR PROCEDURE" described in this manual.** **(See F4–65 BEFORE REPAIR PROCEDURE.)** **(See F4–65 AFTER REPAIR PROCEDURE.)**

Diagnostic procedure

STEP	INSPECTION		ACTION
1	• Inspect following: — Air cleaner element for contamination — ATF level — Fuel quality — Coolant level • Are all items okay?	Yes	Go to next step.
		No	Service as necessary. Repeat Step 1.
2	• Connect WDS or equivalent to DLC–2. • Turn ignition key to ON (Engine OFF). • Retrieve any DTCs. • Is "PASSED" displayed?	Yes	**No DTC is displayed:** • Go to next step.
		No	**DTC is displayed:** • Go to appropriate DTC test.
3	• Access ECT PID. • Drive vehicle while monitoring PID. (See F4–91 PCM Inspection Using the SST (WDS or equivalent).) • Is PID within specification?	Yes	Go to next step.
		No	Inspect for coolant leakage. Inspect cooling fan operations or thermostat operations.

STEP	INSPECTION		ACTION
4	• Is strong blue spark visible at each disconnected high-tension lead while cranking engine?	Yes	Inspect for following: • Spark plugs malfunction • CMP sensor is installed improperly. • Trigger wheel damage on camshaft • Open or short circuit on CMP sensor • Open or short circuit between CMP sensor and PCM terminal 85 or 86 Repair or replace malfunctioning part. • If okay, go to next step.
		No	Inspect following: • High-tension leads • Ignition coil and connector
5	• Install fuel pressure gauge between fuel filter and fuel distributor. • Start engine and run it at idle. • Measure fuel line pressure at idle. • Is fuel line pressure correct at idle? (See F4–66 FUEL LINE PRESSURE INSPECTION)	Yes	Go to next step.
		No	**Zero or low:** • Inspect fuel pump circuit. • Inspect for open fuel pump relief valve. • Inspect for fuel leakage inside pressure regulator. • Inspect for clogged main fuel line. **High:** • Inspect pressure regulator for high pressure cause. • Inspect for clogged fuel return line.
6	• Inspect IMCC operation. (See F4–63 INTAKE MANIFOLD COMMUNICATION CONTROL (IMCC) ACTUATOR INSPECTION.) • Does IMCC work properly?	Yes	Go to next step.
		No	Repair or replace malfunctioning part.
7	• Remove and shake PCV valve. • Does PCV valve rattle?	Yes	Go to next step.
		No	Replace PCV valve.
8	• Inspect for restriction in the exhaust system. • Is there any restriction?	Yes	Inspect exhaust system.
		No	Go to next step.
9	• Is brake system functioning properly?	Yes	Go to next step.
		No	Inspect for cause.
10	• Inspect MAF sensor for contamination. • Is there any contamination?	Yes	Replace MAF sensor.
		No	Go to next step.
11	• Is engine compression correct?	Yes	Inspect valve timing.
		No	Inspect for cause.
12	• Verify test results. — If okay, return to diagnostic index to service any additional symptoms. — If malfunction remains, inspect related Service Information and perform repair or diagnosis. • If vehicle is repaired, troubleshooting completed. • If vehicle is not repaired or additional diagnostic information is not available, replace or reprogram PCM.		

End Of Sie

NO.15 EMISSION COMPLIANCE

AME428018881W20

15	Emission compliance
DESCRIPTION	• Emission compliance test is failed.
POSSIBLE CAUSE	• Vacuum lines leakage or blockage • Cooling system malfunction • Spark plug malfunction • Leakage from intake manifold • Erratic or no signal from CMP sensor • Inadequate fuel pressure • PCV valve malfunction or incorrect valve installation • EGR valve malfunction • Exhaust system clogging • Fuel tank ventilation system malfunction • Charcoal canister damage • Excessive carbon built up in combustion chamber • Improper engine compression • Improper valve timing **Warning** • **The following troubleshooting flow chart contains the fuel system diagnosis and repair procedures. Read the following warnings before performing the fuel system services:** **— Fuel vapor is hazardous. It can easily ignite, causing serious injury and damage. Always keep sparks and flames away from fuel.** **— Fuel line spills and leakage are dangerous. Fuel can ignite and cause serious injuries or death and damage. Fuel can also irritate skin and eyes. To prevent this, always complete "BEFORE REPAIR PROCEDURE" and "AFTER REPAIR PROCEDURE" described in this manual.** **(See F4–65 BEFORE REPAIR PROCEDURE.)** **(See F4–65 AFTER REPAIR PROCEDURE.)**

Diagnostic procedure

STEP	INSPECTION		ACTION
1	• Inspect following: — Vacuum lines for leakage or blockage — Electrical connections — Proper maintenance schedule followed — Intake-air system and air cleaner element concerns: obstructions, leakage or dirtiness • Are all items okay?	Yes	Go to next step.
		No	Service as necessary. Repeat Step 1.
2	• Connect WDS or equivalent to DLC–2. • Turn ignition key to ON (Engine OFF). • Retrieve any DTCs. • Is "PASSED" displayed?	Yes	**No DTC is displayed:** • Go to next step.
		No	**DTC is displayed:** • Go to appropriate DTC test.
3	• Is any other drivability concern present?	Yes	Go to appropriate symptom troubleshooting.
		No	Go to next step.
4	• Connect WDS or equivalent to DLC–2. • Access ECT PID. • Warm up engine and run it at idle. • Verify ECT PID is correct. (See F4–91 PCM Inspection Using the SST (WDS or equivalent).) • Is ECT PID correct?	Yes	Go to next step.
		No	Inspect for coolant leakage. Inspect cooling fan and operation or thermostat operation.
5	• Is strong blue spark visible at each disconnected high-tension lead while cranking engine?	Yes	Inspect for following: • Spark plugs malfunction • CMP sensor is installed improperly. • Damage of trigger wheel on camshaft • Open or short circuit on CMP sensor • Open or short circuit between CMP sensor and PCM terminal 85 or 86 Repair or replace malfunctioning part. • If okay, go to next step.
		No	Inspect ignition coil and connector.

STEP	INSPECTION		ACTION
6	• Install fuel pressure gauge between pulsation damper and fuel distributor. • Start engine and run it at idle. • Measure fuel line pressure at idle. • Is fuel line pressure correct at idle? (See F4–66 FUEL LINE PRESSURE INSPECTION)	Yes	Go to next step.
		No	**Zero or low:** • Inspect fuel pump circuit. • Inspect for open fuel pump relief valve. • Inspect for fuel leakage inside pressure regulator. • Inspect for clogged main fuel line. **High:** • Inspect pressure regulator for high pressure cause. • Inspect for clogged fuel return line.
7	• Remove and shake PCV valve. • Does PCV valve rattle?	Yes	Go to next step.
		No	Replace PCV valve.
8	• Inspect for fuel saturation inside charcoal canister. • Is excess amount of liquid fuel present in canister?	Yes	Replace charcoal canister.
		No	Inspect fuel tank vent system. Then, go to next step.
9	• Inspect for restriction in the exhaust system. • Is there any restriction?	Yes	Inspect exhaust system.
		No	Inspect EGR system.
10	• Verify test results. — If okay, return to diagnostic index to service any additional symptoms. — If malfunction remains, inspect related Service Information and perform repair or diagnosis. • If vehicle is repaired, troubleshooting completed. • If vehicle is not repaired or additional diagnostic information is not available, replace or reprogram PCM.		

End Of Ste

NO.16 HIGH OIL CONSUMPTION/LEAKAGE

AME428018881W21

16	High oil consumption/leakage
DESCRIPTION	• Oil consumption is excessive.
POSSIBLE CAUSE	• PCV valve malfunction • Improper dipstick • Improper engine oil viscosity • Engine internal part malfunction

Diagnostic procedure

STEP	INSPECTION		ACTION
1	• Remove and shake PCV valve. • Does PCV valve rattle?	Yes	Go to next step.
		No	Replace PCV valve.
2	• Verify following: — No external leakage — Proper dipstick — Proper engine oil viscosity • Are all items okay?	Yes	Inspect internal engine parts such as valves, valve guides, valve stem seals, cylinder head drain passage, and piston rings.
		No	Service as necessary. Repeat Step 2.
3	• Verify test results. — If okay, return to diagnostic index to service any additional symptoms. — If malfunction remains, inspect related Service Information and perform repair or diagnosis. • If vehicle is repaired, troubleshooting completed. • If vehicle is not repaired or additional diagnostic information is not available, replace or reprogram PCM.		

End Of Ste

NO.17 COOLING SYSTEM CONCERNS-OVERHEATING

AME428018881W22

17	Cooling system concerns—overheating
DESCRIPTION	• Engine runs at higher than normal temperature/overheats.
POSSIBLE CAUSE	• Improper coolant level • Blown fuses • Coolant leakage • Excessive A/C system pressure • Improper water/anti-freeze mixture • Fans reverse rotation • Poor radiator condition • Thermostat malfunction • Radiator hoses damage • Condenser fan is inoperative. • Improper or damaged radiator cap • Cooling fan is inoperative. • Coolant overflow system malfunction • Improper tension of drive belt • Drive belt damage • Fan control module malfunction

Diagnostic procedure

STEP	INSPECTION		ACTION
1	• Inspect following: — Engine coolant level — Coolant leakage — Water and anti-freeze mixture — Radiator condition — Collapsed or restricted radiator hoses — Radiator pressure cap — Overflow system — Fan rotational direction — Fuses • Are all items okay?	Yes	Go to next step.
		No	Service as necessary. Repeat Step 1.
2	• Connect WDS or equivalent to DLC–2. • Turn ignition key to ON (Engine OFF). • Retrieve any DTCs. • Is “PASSED” displayed?	Yes	**No DTC is displayed:** • Go to next step.
		No	**DTC is displayed:** • Go to appropriate DTC test.
3	• Start engine and run it at idle speed. • Turn A/C switch on. • Does A/C compressor engage?	Yes	Go to step 5.
		No	Inspect following and repair or replace as necessary: • Refrigerant charging amount • Open circuit between A/C relay and PCM terminal 69 • Seized A/C magnetic clutch • A/C magnetic clutch malfunction — If all items are okay, Inspect following: • Refrigerant pressure switch operation • Evaporator temperature sensor and A/C amplifier • A/C switch is stuck open. • Open or short circuit between refrigerant pressure switch and PCM terminal 41 • Open circuit of blower motor fan switch and resistor (if blower motor does not operate)

STEP	INSPECTION		ACTION
4	• Start engine and run it at idle speed. • Turn A/C switch ON. • Do cooling fan and condenser fan operate?	Yes	Go to next step.
		No	**Cooling fan motor does not operate:** • Inspect for following: — Cooling fan motor malfunction — Cooling fan motor GND open — Open circuit between cooling fan motor and fan control module **Condenser fan motor does not operate:** • Inspect for following: — Condenser fan motor malfunction — Condenser fan motor GND open — Open circuit between condenser fan motor and fan control module **Both cooling fan and condenser fan do not operate:** • Inspect for following: — Fan control module malfunction — Fan control module GND open — Open circuit between fan control module and cooling fan relay
5	• Is drive belt okay?	Yes	Go to next step.
		No	Replace drive belt.
6	• Is there any leakage around heater unit in passenger compartment?	Yes	Inspect and service heater for leakage.
		No	Go to next step.
7	• Is there any leakage at coolant hoses and/or radiator?	Yes	Replace malfunctioning part.
		No	Go to next step.
8	• Cool down engine. • Remove thermostat and inspect operation. (See E–16 THERMOSTAT REMOVAL/INSTALLATION.) (See E–17 THERMOSTAT INSPECTION.) • Is thermostat okay?	Yes	Engine coolant temperature and thermostat are okay. Inspect engine block for leakage or blockage.
		No	Access ECT PID on WDS or equivalent. Inspect both ECT PID and temperature gauge readings. • If temperature gauge on instrument cluster indicates normal range but ECT PID is not same as temperature gauge reading, inspect ECT sensor. • If temperature gauge on instrument cluster indicates overheating but ECT PID is normal, inspect temperature gauge and heat gauge unit.
9	• Verify test results. — If okay, return to diagnostic index to service any additional symptoms. — If malfunction remains, inspect related Service Information and perform repair or diagnosis. • If vehicle is repaired, troubleshooting completed. • If vehicle is not repaired or additional diagnostic information is not available, replace or reprogram PCM.		

End Of Ste

NO.18 COOLING SYSTEM CONCERNS-RUNS COLD

AME428018881W23

18	Cooling system concerns—runs cold
DESCRIPTION	• Engine takes excessive period for reaching normal operating temperature.
POSSIBLE CAUSE	• Thermostat malfunction • Condenser fan system malfunction • Cooling fan system malfunction

Diagnostic procedure

STEP	INSPECTION		ACTION
1	• Is customer complaint “Lack of passenger compartment heat” only?	Yes	Inspect A/C and heater systems.
		No	Go to next step.
2	• Does engine speed continue at fast idle?	Yes	Go to symptom troubleshooting “No.9 Fast idle/runs on”.
		No	Go to next step.
3	• Remove thermostat and inspect operation. (See E–16 THERMOSTAT REMOVAL/INSTALLATION.) (See E–17 THERMOSTAT INSPECTION.) • Is thermostat okay?	Yes	Access ECT PID on WDS or equivalent. Inspect both ECT PID and temperature gauge on instrument cluster readings. • If temperature gauge on instrument cluster indicates normal range but ECT PID is not same as temperature gauge reading, inspect ECT sensor. • If temperature gauge on instrument cluster indicates cold range but ECT PID is normal, inspect temperature gauge and heat gauge unit.
		No	Replace thermostat.
4	• Verify test results. — If okay, return to diagnostic index to service any additional symptoms. — If malfunction remains, inspect related Service Information and perform repair or diagnosis. • If vehicle is repaired, troubleshooting completed. • If vehicle is not repaired or additional diagnostic information is not available, replace or reprogram PCM.		

End Of Sie

NO.19 EXHAUST SMOKE

AME428018881W24

19	Exhaust smoke
DESCRIPTION	• Blue, black, or white smoke from exhaust system
POSSIBLE CAUSE	**Blue smoke (Burning oil):** • PCV valve malfunction • Engine internal oil leakage **White smoke (Water in combustion):** • Cooling system malfunction (coolant loss) • Engine internal coolant leakage **Black smoke (Rich fuel mixture):** • Air cleaner is restricted. • Intake-air system collapsed or restricted. • Fuel return line is restricted. • Excessive fuel pressure • Improper engine compression • Injector fuel leakage • Ignition system malfunction **Warning** • **The following troubleshooting flow chart contains the fuel system diagnosis and repair procedures. Read the following warnings before performing the fuel system services:** **— Fuel vapor is hazardous. It can easily ignite, causing serious injury and damage. Always keep sparks and flames away from fuel.** **— Fuel line spills and leakage are dangerous. Fuel can ignite and cause serious injuries or death and damage. Fuel can also irritate skin and eyes. To prevent this, always complete “BEFORE REPAIR PROCEDURE” and “AFTER REPAIR PROCEDURE” described in this manual.** **(See F4–65 BEFORE REPAIR PROCEDURE.)** **(See F4–65 AFTER REPAIR PROCEDURE.)**

Diagnostic procedure

STEP	INSPECTION		ACTION
1	• What color is smoke coming from exhaust system?	Blue	Burning oil is indicated. Go to next step.
		White	Water in combustion is indicated. Go to Step 3.
		Black	Rich fuel mixture is indicated. Go to Step 4.
2	• Remove and shake PCV valve. • Does PCV valve rattle?	Yes	Inspect for following: • Damaged valve guide, stems or valve seals • Blocked oil drain passage in cylinder head • Piston rings are not seated, seized or worn. • Damaged cylinder bore — If other drivability symptoms are present, return to diagnostic index to service any additional symptoms.
		No	Replace PCV valve.
3	• Does cooling system hold pressure?	Yes	Inspect for following: • Cylinder head gasket leakage • Intake manifold gasket leakage • Engine block cracks or porosity — If other drivability symptoms are present, return to diagnostic index to service any additional symptoms.
		No	Inspect for cause.
4	• Inspect for following: — Air cleaner restriction — Collapsed or restricted intake-air system — Restricted fuel return line • Are all items okay?	Yes	Go to next step.
		No	Service as necessary. Repeat Step 4.
5	• Connect WDS or equivalent to DLC–2. • Turn ignition switch on. • Retrieve any DTC. • Is “PASSED” displayed?	Yes	**No DTC displayed:** • Go to next step.
		No	**DTC displayed:** • Go to appropriate DTC test.
6	• Install fuel pressure gauge between fuel filter and fuel distributor. • Start engine and run it at idle. • Measure fuel line pressure at idle. • Is fuel line pressure correct at idle? (See F4–66 FUEL LINE PRESSURE INSPECTION)	Yes	Go to next step.
		No	**Zero or low:** • Inspect fuel pump circuit • Inspect for open fuel pump relief valve • Inspect for fuel leakage inside pressure regulator • Inspect for clogged main fuel line **High:** • Inspect pressure regulator for high pressure cause • Inspect for clogged fuel return line
7	• Is strong blue spark visible at each disconnected high-tension lead while cranking engine?	Yes	Inspect spark plugs and CMP sensor.
		No	Inspect following: • High-tension leads • Ignition coil and connector
8	• Verify test results. — If okay, return to diagnostic index to service any additional symptoms. — If malfunction remains, inspect related Service Information and perform repair or diagnosis. • If vehicle is repaired, troubleshooting completed. • If vehicle is not repaired or additional diagnostic information is not available, replace or reprogram PCM.		

End Of Ste

NO.20 FUEL ODOR (IN ENGINE COMPARTMENT)

AME428018881W25

20	Fuel odor (in engine compartment)
DESCRIPTION	• Gasoline fuel smell or visible leakage
POSSIBLE CAUSE	• Excessive fuel pressure • Purge solenoid valve malfunction • Fuel tank vent system blockage • Charcoal canister malfunction **Warning** • **The following troubleshooting flow chart contains the fuel system diagnosis and repair procedures. Read the following warnings before performing the fuel system services:** **— Fuel vapor is hazardous. It can easily ignite, causing serious injury and damage. Always keep sparks and flames away from fuel.** **— Fuel line spills and leakage are dangerous. Fuel can ignite and cause serious injuries or death and damage. Fuel can also irritate skin and eyes. To prevent this, always complete "BEFORE REPAIR PROCEDURE" and "AFTER REPAIR PROCEDURE" described in this manual.** **(See F4–65 BEFORE REPAIR PROCEDURE.)** **(See F4–65 AFTER REPAIR PROCEDURE.)**

Diagnostic procedure

STEP	INSPECTION		ACTION
1	• Visually inspect for fuel leakage at fuel injector O-ring, and fuel line. • Service as necessary. • Is fuel line pressure held after ignition key is turned to OFF?	Yes	Go to next step.
		No	Inspect pressure regulator diaphragm condition. • If condition is okay, inspect fuel injector. • If condition is not okay, replace pressure regulator.
2	• Inspect for blockage/restriction or open between engine vacuum port and charcoal canister. • Inspect for blockage in fuel tank vent system. • Is fault indicated?	Yes	Replace vacuum hose.
		No	Go to next step.
3	• Inspect purge solenoid valve. (See F4–85 PURGE SOLENOID VALVE INSPECTION.) • Is solenoid operating properly?	Yes	Go to next step.
		No	Replace purge solenoid valve.
4	• Connect WDS or equivalent to DLC–2. • Turn ignition key to ON (Engine OFF). • Retrieve any DTCs. • Is "PASSED" displayed?	Yes	**No DTC is displayed:** • Inspect charcoal canister for fuel saturation. — If excess amount of liquid fuel present, replace charcoal canister.
		No	**DTC is displayed:** • Go to appropriate DTC test.
5	• Verify test results. — If okay, return to diagnostic index to service any additional symptoms. — If malfunction remains, inspect related Service Information and perform repair or diagnosis. • If vehicle is repaired, troubleshooting completed. • If vehicle is not repaired or additional diagnostic information is not available, replace or reprogram PCM.		

End Of Sie

NO.21 ENGINE NOISE

AME428018881W26

21	Engine noise
DESCRIPTION	• Engine noise from under hood
POSSIBLE CAUSE	**Squeal, click or chirp noise:** • Improper engine oil level • Improper drive belt tension **Rattle sound noise:** • Loose parts **Hiss sound noise:** • Vacuum leakage • Loose spark plug • Air leakage from intake-air system **Rumble or grind noise:** • Improper drive belt tension **Rap or roar sound noise:** • Exhaust system looseness **Other noise:** • Camshaft friction gear noise or HLA noise

Diagnostic procedure

STEP	INSPECTION		ACTION
1	• Is squeal, click or chirp sound present?	Yes	Inspect engine oil level or drive belts.
		No	Go to next step.
2	• Is rumble or grind sound present?	Yes	Inspect drive belt.
		No	Go to next step.
3	• Is rattle sound present?	Yes	Inspect location of rattle for loose parts.
		No	Go to next step.
4	• Is hiss sound present?	Yes	Inspect for following: • Vacuum leakage • Spark plug loose • Intake-air system leakage
		No	Go to next step.
5	• Is rap or roar sound present?	Yes	Inspect exhaust system for loose parts.
		No	Go to next step.
6	• Is knock sound present?	Yes	Go to symptom troubleshooting “No.13 Knocking/ pinging”.
		No	If noise comes from engine internal, inspect for friction gear or HLA noise.
7	• Verify test results. — If okay, return to diagnostic index to service any additional symptoms. — If malfunction remains, inspect related Service Information and perform repair or diagnosis. • If vehicle is repaired, troubleshooting completed. • If vehicle is not repaired or additional diagnostic information is not available, replace or reprogram PCM.		

End Of Ste

NO.22 VIBRATION CONCERNS (ENGINE)

AME428018881W27

22	Vibration concerns (engine)
DESCRIPTION	• Vibration from under hood or driveline
POSSIBLE CAUSE	• Loose attaching bolts or worn parts • Components malfunction such as worn parts

Diagnostic procedure

STEP	INSPECTION		ACTION
1	• Inspect following components for loose attaching bolts or worn parts: — Cooling fan — Drive belt and pulleys — Engine mounts • All items okay?	Yes	Inspect following systems: • Wheels • ATX • Driveline • Suspension
		No	Readjust or retighten engine mount installation position. Service as necessary for other parts.
2	• Verify test results. — If okay, return to diagnostic index to service any additional symptoms. — If malfunction remains, inspect related Service Information and perform repair or diagnosis. • If vehicle is repaired, troubleshooting completed. • If vehicle is not repaired or additional diagnostic information is not available, replace or reprogram PCM.		

End Of Se

NO.23 A/C DOES NOT WORK SUFFICIENTLY

AME428018881W28

23	**A/C does not work sufficiently**.
DESCRIPTION	• A/C compressor magnetic clutch does not engage when A/C switch is turned on.
POSSIBLE CAUSE	• Improper refrigerant charging amount • Open A/C magnetic clutch • Open circuit between A/C relay and A/C magnetic clutch • Poor GND of A/C magnetic clutch • Refrigerant pressure switch is stuck open. • A/C relay is stuck open. • Seized A/C compressor • Open circuit between A/C switch and PCM through both refrigerant pressure switch and A/C amplifier

Diagnostic procedure

STEP	INSPECTION		ACTION
1	• Connect WDS or equivalent to DLC–2. • Turn ignition key to ON (Engine OFF). • Retrieve any DTCs. • Is “PASSED” displayed?	Yes	**No DTC is displayed:** • Go to next step.
		No	**DTC is displayed:** • Go to appropriate DTC test.
2	• Disconnect A/C compressor connector. • Start engine and turn A/C switch on. • Is there correct voltage at terminal of A/C magnetic clutch connector? **Specification** **Above 10.5 V**	Yes	Inspect for GND condition of magnetic clutch on A/C compressor. • If GND condition is okay, inspect for open circuit of magnetic clutch coil.
		No	Go to next step.
3	• Disconnect refrigerant pressure switch connector. • Connect jumper wire between terminals B and C (high and low pressure side) of refrigerant pressure switch connector. • Turn ignition key to ON (Engine OFF). • Turn A/C switch on and set blower fan at any speed. • Does A/C work?	Yes	Inspect refrigerant pressure switch operation. • If switch is okay, go to next step.
		No	Inspect for following: • A/C switch is stuck open. • Open circuit between refrigerant pressure switch and PCM terminal 41 • Open circuit of blower motor fan switch and resistor (if blower motor does not operate) • Inspect evaporator temperature sensor and A/C amplifier.
4	• Remove jumper wire from switch connector. • Reconnect connector to refrigerant pressure switch. • Start engine and turn A/C switch on. • Does fan operate?	Yes	Inspect for following: • A/C relay is stuck open. • Open circuit between A/C relay and PCM terminal 69
		No	Inspect following and repair or replace as necessary: • Refrigerant charging amount • A/C compressor for being seized.

STEP	INSPECTION	ACTION
5	• Verify test results. — If okay, return to diagnostic index to service any additional symptoms. — If malfunction remains, inspect related Service Information and perform repair or diagnosis. • If vehicle is repaired, troubleshooting completed. • If vehicle is not repaired or additional diagnostic information is not available, replace or reprogram PCM.	

End Of Ste

NO.24 A/C ALWAYS ON/A/C COMPRESSOR RUNS CONTINUOUSLY

AME428018881W29

24	A/C always ON or A/C compressor runs continuously
DESCRIPTION	• A/C compressor magnetic clutch does not disengage.
POSSIBLE CAUSE	• Stuck engagement • A/C relay is stuck closed. • Short to GND between A/C switch and PCM • Short to GND circuit between A/C relay and PCM • A/C relay to magnetic clutch circuit shorts to battery power.

Diagnostic procedure

STEP	INSPECTION		ACTION
1	• Connect WDS or equivalent to DLC–2. • Turn ignition key to ON (Engine OFF). • Retrieve any DTC. • Is “PASSED” displayed?	Yes	**No DTC is displayed:** • Go to next step.
		No	**DTC is displayed:** • Go to appropriate DTC test.
2	• Start engine and run it at idle. • Turn A/C switch on. • Remove A/C relay. • Does A/C magnetic clutch disengage?	Yes	Inspect for following: • A/C relay is stuck closed. • Short to GND circuit between A/C relay and PCM terminal 69 — If both items are okay, go to next step.
		No	Inspect if circuit between A/C relay and magnetic clutch shorts to battery power circuit. • If circuit is okay, inspect magnetic clutch stuck engagement or clearance.
3	• Disconnect refrigerant pressure switch connector. • Start the engine and turn A/C switch on. **Note** • A/C should not work when the connector disconnected. If A/C remains working, short to GND circuit may be present. • Does A/C remain working?	Yes	Inspect for short to GND circuit between refrigerant pressure switch and PCM terminal 41.
		No	Go to next step.
4	• Reconnect refrigerant pressure switch connector. • Turn off A/C switch. **Note** • A/C should not work when the A/C switch is turned off. If A/C remains working, short to GND circuit may be present. • Does A/C remain working?	Yes	Inspect for following: • Short to GND circuit between A/C switch and A/C amplifier • Short to GND circuit between A/C amplifier and refrigerant pressure switch
		No	Inspect for stuck closed A/C switch.
5	• Verify test results. — If okay, return to diagnostic index to service any additional symptoms. — If malfunction remains, inspect related Service Information and perform repair or diagnosis. • If vehicle is repaired, troubleshooting completed. • If vehicle is not repaired or additional diagnostic information is not available, replace or reprogram PCM.		

End Of Ste

F4

NO.25 A/C DOES NOT CUT OFF UNDER WIDE OPEN THROTTLE CONDITIONS

AME428018881W30

25	**A/C does not cut off under wide open throttle conditions.**
DESCRIPTION	• A/C compressor magnetic clutch does not disengage under wide open throttle.
POSSIBLE CAUSE	• TP sensor malfunction • TP sensor misadjustment • Loosely installed TP sensor

Diagnostic procedure

STEP	INSPECTION		ACTION
1	• Does A/C compressor disengage when A/C switch is turned off?	Yes	Go to next step.
		No	Go to symptom troubleshooting “No.24 A/C always on/ A/C compressor runs continuously”.
2	• Connect WDS or equivalent to DLC–2. • Turn ignition key to ON (Engine OFF). • Retrieve any DTCs. • Is “PASSED” displayed?	Yes	**No DTC is displayed:** • Inspect TP sensor for proper adjustment.
		No	**DTC is displayed:** • Go to appropriate DTC test.
3	• Verify test results. — If okay, return to diagnostic index to service any additional symptoms. — If malfunction remains, inspect related Service Information and perform repair or diagnosis. • If vehicle is repaired, troubleshooting completed. • If vehicle is not repaired or additional diagnostic information is not available, replace or reprogram PCM.		

End Of Sie

NO.26 EXHAUST SULPHUR SMELL

AME428018881W31

26	**Exhaust sulphur smell**
DESCRIPTION	• Rotten egg smell (sulphur) from exhaust
POSSIBLE CAUSE	• Electrical connectors are disconnected or connected poorly. • Charcoal canister malfunction • Vacuum lines are disconnected or connected improperly. • Improper fuel pressure **Warning** • **The following troubleshooting flow chart contains the fuel system diagnosis and repair procedures. Read the following warnings before performing the fuel system services:** **— Fuel vapor is hazardous. It can easily ignite, causing serious injury and damage. Always keep sparks and flames away from fuel.** **— Fuel line spills and leakage are dangerous. Fuel can ignite and cause serious injuries or death and damage. Fuel can also irritate skin and eyes. To prevent this, always complete “BEFORE REPAIR PROCEDURE” and “AFTER REPAIR PROCEDURE” described in this manual.** **(See F4–65 BEFORE REPAIR PROCEDURE.)** **(See F4–65 AFTER REPAIR PROCEDURE.)**

Diagnostic procedure

STEP	INSPECTION		ACTION
1	• Are any drivability or exhaust smoke concerns present?	Yes	Go to appropriate flow chart.
		No	Go to next step.
2	• Inspect following: — Electrical connections — Vacuum lines • Are all items okay?	Yes	Go to next step.
		No	Service as necessary. Repeat Step 2.
3	• Connect WDS or equivalent to DLC–2. • Turn ignition key to ON (Engine OFF). • Retrieve any DTC. • Is “PASSED” displayed?	Yes	**No DTC is displayed:** • Go to next step.
		No	**DTC is displayed:** • Go to appropriate DTC test.

STEP	INSPECTION		ACTION
4	• Install fuel pressure gauge between pulsation damper and fuel distributor. • Start engine and run it at idle. • Is fuel line pressure correct at idle? (See F4–66 FUEL LINE PRESSURE INSPECTION)	Yes	Go to next step.
		No	**Zero or low:** • Inspect fuel pump circuit. • Inspect for open fuel pump relief valve. • Inspect for fuel leakage inside pressure regulator. • Inspect for clogged main fuel line. **High:** • Inspect pressure regulator for high pressure cause. • Inspect for clogged fuel return line.
5	• Inspect charcoal canister for fuel saturation. • Is excess amount of liquid fuel present in canister?	Yes	Replace charcoal canister.
		No	Inspect fuel tank vent system. • If fuel tank vent system is okay, since sulfur content can vary in different fuels, try a different brand. • If fuel tank vent system is not okay, repair or replace malfunctioning part.
6	• Verify test results. — If okay, return to diagnostic index to service any additional symptoms. — If malfunction remains, inspect related Service Information and perform repair or diagnosis. • If vehicle is repaired, troubleshooting completed. • If vehicle is not repaired or additional diagnostic information is not available, replace or reprogram PCM.		

End Of Ste

NO.27 FUEL REFILL CONCERNS

AME428018881W32

F4

27	Fuel refill concerns
DESCRIPTION	• Fuel tank does not fill smoothly.
POSSIBLE CAUSE	• Clogged EVAP pipes • Nonreturn valve malfunction • Improper use of fuel nozzle • Inadequate fuel filling speed **Warning** • **The following troubleshooting flow chart contains the fuel system diagnosis and repair procedures. Read the following warnings before performing the fuel system services:** **— Fuel vapor is hazardous. It can easily ignite, causing serious injury and damage. Always keep sparks and flames away from fuel.** **— Fuel line spills and leakage are dangerous. Fuel can ignite and cause serious injuries or death and damage. Fuel can also irritate skin and eyes. To prevent this, always complete "BEFORE REPAIR PROCEDURE" and "AFTER REPAIR PROCEDURE" described in this manual.** **(See F4–65 BEFORE REPAIR PROCEDURE.)** **(See F4–65 AFTER REPAIR PROCEDURE.)**

Diagnostic procedure

STEP	INSPECTION		ACTION
1	• Retrieve DTCs. • Are there any DTCs displayed?	Yes	Go to appropriate DTC test.
		No	Go to next step.
2	• Remove fuel-filler pipe. • Make sure nonreturn valve is installed properly. • Inspect nonreturn valve operation. • Is nonreturn valve okay?	Yes	Inspect for following: • Improper use of fuel nozzle • Inadequate fuel filling speed
		No	**Nonreturn valve is installed improperly:** • Reinstall nonreturn valve to proper position. **Nonreturn valve does not operate properly:** • Replace nonreturn valve.
3	• Verify test results. — If okay, return to diagnostic index to service any additional symptoms. — If malfunction remains, inspect related Service Information and perform repair or diagnosis. • If vehicle is repaired, troubleshooting completed. • If vehicle is not repaired or additional diagnostic information is not available, replace or reprogram PCM.		

End Of Ste

NO.28 FUEL FILLING SHUT OFF ISSUES

AME428018881W33

28	Fuel filling shut off issues
DESCRIPTION	• Fuel does not shut off properly.
POSSIBLE CAUSE	• Clogged EVAP pipes • Nonreturn valve malfunction • Fuel shut-off valve malfunction • Fuel nozzle malfunction • Fuel nozzle is not inserted correctly. **Warning** • **The following troubleshooting flow chart contains the fuel system diagnosis and repair procedures. Read the following warnings before performing the fuel system services:** **— Fuel vapor is hazardous. It can easily ignite, causing serious injury and damage. Always keep sparks and flames away from fuel.** **— Fuel line spills and leakage are dangerous. Fuel can ignite and cause serious injuries or death and damage. Fuel can also irritate skin and eyes. To prevent this, always complete "BEFORE REPAIR PROCEDURE" and "AFTER REPAIR PROCEDURE" described in this manual.** **(See F4–65 BEFORE REPAIR PROCEDURE.)** **(See F4–65 AFTER REPAIR PROCEDURE.)**

Diagnostic procedure

STEP	INSPECTION		ACTION
1	• Retrieve DTCs. • Are there any DTCs displayed?	Yes	Go to appropriate DTC test.
		No	Go to next step.
2	• Remove fuel-filler pipe. • Make sure nonreturn valve is installed properly. • Inspect nonreturn valve operation. • Is nonreturn valve okay?	Yes	Inspect for following: • Improper use of fuel nozzle • Fuel is not inserted correctly. • Inspect fuel shut-off valve.
		No	**Nonreturn valve is installed improperly:** • Reinstall nonreturn valve to proper position. **Nonreturn valve does not operate properly:** • Replace nonreturn valve.
3	• Verify test results. — If okay, return to diagnostic index to service any additional symptoms. — If malfunction remains, inspect related Service Information and perform repair or diagnosis. • If vehicle is repaired, troubleshooting completed. • If vehicle is not repaired or additional diagnostic information is not available, replace or reprogram PCM.		

End Of Se

NO.29 CONSTANT VOLTAGE

AME428018881W34

29	Constant voltage
DESCRIPTION	• Incorrect constant voltage
POSSIBLE CAUSE	• Constant voltage circuit malfunction **Note** • TP sensor, EGR boost sensor and FTP sensor use constant voltage.

Diagnostic procedure

STEP	INSPECTION		ACTION
1	• Disconnect appropriate sensor connector when constant voltage circuit inspection failed. • Turn ignition key to ON (Engine OFF). • Measure voltage between following appropriate sensor connector terminals: — Constant voltage terminal and GND terminal • Is constant voltage **above 6.0 V**?	Yes	Go to Step 13.
		No	Go to next step.
2	• Is voltage across battery terminals **above 10.5 V**?	Yes	Go to next step.
		No	Inspect charging system.

STEP	INSPECTION		ACTION
3	• Turn ignition key to OFF. • Leave appropriate sensor connector disconnected. • Measure voltage between battery positive terminal and GND (between PCM and appropriate sensor) circuit at appropriate sensor connector. • Is voltage **above 10.5 V** and **within 1.0 V** of battery voltage?	Yes	Go to next step.
		No	Go to Step 8.
4	**Note** • Purpose of this step is to determine if WDS or equivalent is communicating with PCM. • Turn ignition key to ON (Engine OFF). • Attempt to access ECT PID. • Can ECT PID be accessed?	Yes	Go to Step 7.
		No	Go to next step.
5	• Turn ignition key to OFF. • Disconnect TP sensor, EGR boost sensor and PCM connectors. • Turn ignition key to ON (Engine OFF). • Measure voltage between PCM connector terminals 71/97 and 24/51/76/77/103. • Is voltage **above 10.5 V**?	Yes	Go to next step.
		No	Repair open circuit between PCM terminal 71/97 and main relay.
6	• Leave TP sensor, EGR boost sensor, FTP sensor and PCM connectors disconnected. • Measure resistance between PCM connector terminals 90 and 24/51/76/77/103. • Is resistance **above 10 kilohms**?	Yes	Inspect for constant voltage at suspect sensor connector again.
		No	Repair constant voltage circuit shorted to GND.
7	• Turn ignition switch off. • Leave TP sensor disconnected. • Disconnect PCM connector. • Measure resistance between PCM connector terminal 90 and constant voltage circuit at appropriate sensor connector. • Is resistance **below 5.0 ohms**?	Yes	Inspect for constant voltage at suspect sensor connector again.
		No	Repair open constant voltage circuit.
8	**Note** • Purpose of this step is to determine if WDS or equivalent is communicating with PCM. • Reconnect TP sensor connector. • Turn ignition switch on. • Attempt to access ECT PID. • Can ECT PID be accessed?	Yes	Go to next step.
		No	Go to Step 11.
9	• Are DTCs present for two or more sensors connected to PCM terminal 91? • Sensor connected to PCM terminal 91: — ECT sensor (P0117, P0118, P0125) — BARO sensor (P0107, P0108) (European (L.H.D.) specs.) — EGR boost sensor (P0106, P0107, P0108) (Australian, General (L.H.D. R.H.D.) specs.) — HO2S (front) (P0131, P0132, P0134, P0151, P0152, P0154) — HO2S (rear) (P0138, P0140, P0158, P0160) — IAT sensor (P0111, P0112, P0113) — TP sensor (P0121, P0122, P0123)	Yes	Go to next step.
		No	Repair open GND circuit to sensor where constant voltage circuit inspection failed.
10	• Turn ignition key to OFF. • Disconnect WDS or equivalent from DLC–2. • Disconnect PCM connector. • Measure resistance between GND circuit at appropriate sensor connector and PCM connector terminal 91. • Is resistance **below 5.0 ohms**?	Yes	Reconnect sensor connector. Go to appropriate DTC test.
		No	Repair open GND circuit.

STEP	INSPECTION		ACTION
11	• Turn ignition key to OFF. • Disconnect PCM connector. • Measure resistance between battery negative terminal and PCM terminals 24/51/76/77/103. • Is each resistance **below 5.0 ohms**?	Yes	Go to next step.
		No	Repair open GND circuit.
12	• Turn ignition key to OFF. • Measure resistance between GND circuit at following sensor connector and GND: — TP sensor — EGR boost sensor — ECT sensor — IAT sensor — HO2S (front) — HO2S (rear) • Is each resistance **below 5.0 ohms**?	Yes	GND circuits are okay. Inspect for constant voltage at suspect sensor connector again.
		No	Inspect for open GND circuit.
13	• Turn ignition key to OFF. • Disconnect TP sensor, EGR boost sensor, FTP sensor and PCM connectors. • Turn ignition key to ON (Engine OFF). • Measure voltage between constant voltage circuit at TP sensor connector and battery negative terminal. • Is voltage **below 0.5 V**?	Yes	Inspect for constant voltage at suspect sensor connector again.
		No	Repair constant voltage circuit shorted to power in harness.
14	• Verify test results. — If okay, return to diagnostic index to service any additional symptoms. — If malfunction remains, inspect related Service Information and perform repair or diagnosis. • If vehicle is repaired, troubleshooting completed. • If vehicle is not repaired or additional diagnostic information is not available, replace or reprogram PCM.		

End Of Ste

NO.30 SPARK PLUG CONDITION

AME428018881W35

30	Spark plug condition
DESCRIPTION	• Incorrect spark plug condition
POSSIBLE CAUSE	**Note** • Inspecting spark plugs condition can determine whether problem is related to a specific cylinder or to all cylinders. **Wet/carbon is stuck on specific plug:** • Spark—Weak, not visible • Air/fuel mixture—Excessive fuel injection volume • Compression—No compression, low compression • Faulty spark plug **Grayish white with specific plug:** • Air/fuel mixture—Insufficient fuel injection volume • Faulty spark plug **Wet/carbon stuck on all plugs:** • Spark—Weak • Air/fuel mixture—Too rich • Compression—Low compression • Clogging in intake/exhaust system **Grayish white with all plugs:** • Air/fuel mixture—Too lean **Warning** • **The following troubleshooting flow chart contains the fuel system diagnosis and repair procedures. Read the following warnings before performing the fuel system services:** **— Fuel vapor is hazardous. It can easily ignite, causing serious injury and damage. Always keep sparks and flames away from fuel.** **— Fuel line spills and leakage are dangerous. Fuel can ignite and cause serious injuries or death and damage. Fuel can also irritate skin and eyes. To prevent this, always complete "BEFORE REPAIR PROCEDURE" and "AFTER REPAIR PROCEDURE" described in this manual.** **(See F4–65 BEFORE REPAIR PROCEDURE.)** **(See F4–65 AFTER REPAIR PROCEDURE.)**

Diagnostic procedure

STEP	INSPECTION		ACTION
1	• Remove all spark plugs. • Inspect spark plug condition. • Is spark plug condition okay?	Yes	Troubleshooting completed.
		No	**Specific plug is wet or covered with carbon:** • Go to next step. **Specific plug looks grayish white:** • Go to Step 7. **All plugs are wet or covered with carbon:** • Go to Step 9. **All plugs look grayish white:** • Go to Step 15.
2	• Is spark plug wet/covered with carbon by engine oil?	Yes	Working up and down inspect all areas related to oil.
		No	Go to next step.
3	• Inspect spark plug for following. — Cracked insulator — Heat range — Air gap — Worn electrode • Is spark plug okay?	Yes	Go to next step.
		No	Replace spark plug.
4	• Inspect compression pressure at suspected faulty cylinder. • Is compression pressure correct?	Yes	Go to next step.
		No	Repair or replace malfunctioning part.
5	• Install all spark plugs. • Carry out spark test at suspected faulty cylinder. • Is strong blue spark visible? (Compare with normal cylinder.)	Yes	Go to next step.
		No	Repair or replace malfunctioning parts.
6	• Carry out fuel line pressure inspection. (See F4–80 PRESSURE REGULATOR INSPECTION.) • Is fuel line pressure correct?	Yes	Inspect fuel injector for following: • Open or short in injector • Leakage • Injection volume
		No	**Zero or low:** • Inspect fuel pump circuit. • Inspect for open fuel pump relief valve. • Inspect for fuel leakage inside pressure regulator. • Inspect for clogged main fuel line. **High:** • Inspect pressure regulator for pressure cause. • Inspect for clogged fuel return line.
7	• Inspect spark plug for following. — Heat range — Air gap • Is spark plug okay?	Yes	Go to next step.
		No	Replace spark plug.
8	• Remove suspected fuel injector. • Inspect following: — Resistance (See F4–78 FUEL INJECTOR INSPECTION.) — Fuel injection volume (See F4–78 FUEL INJECTOR INSPECTION.) • Are all above items okay?	Yes	Inspect for open circuit between suspected fuel injector connector terminal and PCM connector terminals.
		No	Replace fuel injector.
9	• Is air cleaner element free of restriction?	Yes	Go to next step.
		No	Replace air cleaner element.
10	• Carry out spark test. • Is strong blue spark visible at each cylinder?	Yes	Go to next step.
		No	Repair or replace malfunctioning part.
11	• Carry out fuel line pressure inspection. • Is fuel line pressure correct? (See F4–66 FUEL LINE PRESSURE INSPECTION.)	Yes	Go to next step.
		No	**Zero or low:** • Inspect fuel pump circuit. • Inspect for open fuel pump relief valve. • Inspect for fuel leakage inside pressure regulator. • Inspect for clogged main fuel line. **High:** • Inspect pressure regulator for high pressure cause. • Inspect for clogged fuel return line.

STEP	INSPECTION		ACTION
12	• Inspect following PIDs. — ECT — O2S11 — O2S21 — MAF — O2S12 — O2S22 (See F4–91 PCM Inspection Using the SST (WDS or equivalent).) • Are PIDs okay?	Yes	Go to next step.
		No	Repair or replace malfunctioning part.
13	• Carry out purge control inspection (when engine can be started). • Is purge control correct?	Yes	Go to next step.
		No	Repair or replace malfunctioning part.
14	• Carry out compression inspection. • Is compression correct?	Yes	Inspect for clogging in exhaust system.
		No	Repair or replace malfunctioning part.
15	• When engine cannot be started, inspect intake-air system for air leakage. • When engine can be started, carry out intake manifold vacuum inspection. • Is air sucked in from intake-air system?	Yes	Repair or replace malfunctioning part.
		No	Go to next step.
16	• Carry out fuel line pressure inspection. • Is fuel line pressure correct? (See F4–66 FUEL LINE PRESSURE INSPECTION.)	Yes	Inspect following PIDs. • ECT • O2S11 • O2S21 • MAF • O2S12 • O2S22 (See F4–91 PCM Inspection Using the SST (WDS or equivalent).) Inspect PCM GND condition.
		No	**Zero or low:** • Inspect fuel pump circuit. • Inspect for open fuel pump relief valve. • Inspect for fuel leakage inside pressure regulator. • Inspect for clogged main fuel line. **High:** • Inspect pressure regulator for high pressure cause. • Inspect for clogged fuel return line.
17	• Verify test results. — If okay, return to diagnostic index to service any additional symptoms. — If malfunction remains, inspect related Service Information and perform repair or diagnosis. • If vehicle is repaired, troubleshooting completed. • If vehicle is not repaired or additional diagnostic information is not available, replace or reprogram PCM.		

End Of Sie

ENGINE CONTROL SYSTEM OPERATION INSPECTION

AME428018881W36

Input Signal System Investigation Procedure

1. Find an unusual signal. (See F4–297 Finding unusual signals.)
2. Locate its source. (See F4–297 Locating the source of unusual signals.)
3. Repair or replace the defective part.
4. Confirm that the unusual signal has been erased.

Finding unusual signals

While referring to F4–109 ON-BOARD DIAGNOSTIC TEST, use the PID/DATA monitor and record function to inspect the input signal system relating to the problem.

1. Start the engine and idle the vehicle. You can assume that any signals that are out of specifications by a wide margin are unusual.
2. When recreating the problem, any sudden change in monitor input signals that is not consciously created by the driver can be judged as unusual.

Locating the source of unusual signals

Caution

- **Compare the WDS or equivalent monitor voltage with the measurement voltage using the digital measurement system function. If you use another tester, misreading may occur.**
- **When measuring voltage, attach the tester GND to the GND of the PCM that is being tested, or to the engine itself. If this is not done, the measured voltage and actual voltage may differ.**
- **After connecting the pin to a waterproof coupler, confirming continuity and measuring the voltage, inspect the waterproof connector for cracks. If there are any, use sealant to fix them. Failure to do this may result in deterioration of the harness or terminal from water damage, leading to problems with the vehicle.**

F4

Variable resistance type 1 (TP sensor and EGR boost sensor)

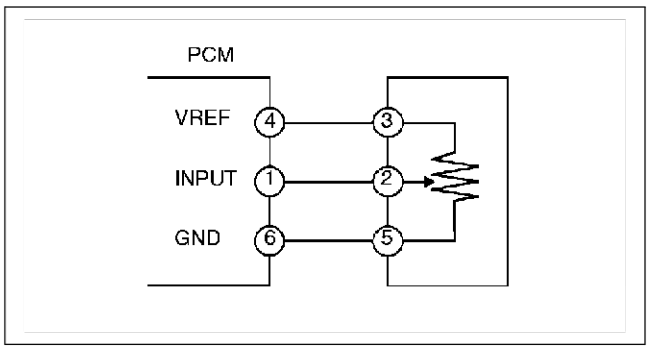

YMU103WA5

Investigate the input signal system for variable resistance type 1

1. When you get an unusual signal, measure the #1 PCM terminal voltage.
   - If the #1 terminal voltage and the WDS or equivalent monitor voltage are the same, proceed to the next step.
   - If there is a difference of **0.5 V or above**, inspect for the following points concerning the PCM connector.
     - — Female terminal opening is loose.
     - — Coupler (pin holder) damage
     - — Pin discoloration (blackness)
     - — Harness/pin crimp is loose or disconnected.
2. Measure the #2 sensor terminal voltage.
   - If there is a **0.5 V or above** difference between the sensor and WDS or equivalent voltages, inspect the harness for open or short circuits.
   - If the sensor and WDS or equivalent voltages are the same, inspect for the following points concerning the sensor connector.
   - If there are no problems, proceed to next investigation below.
     - — Female terminal opening is loose.
     - — Coupler (pin holder) damage
     - — Pin discoloration (blackness)

Investigate the standard power supply system for variable resistance type 1

- Confirm that the #3 terminal is at **5 V**.
  - — If the measured voltage on the #3 terminal is **5 V**, inspect the following points on the sensor connector.
  - — If there is no problem, inspect for the following.

- Female terminal opening loose
- Coupler (pin holder) damage
- Pin discoloration (blackness)

— If the #3 terminal measures other than **5 V**, inspect for the following.
- Open or short circuit in harness
- Harness/pin crimp is loose or disconnected.

Investigate the GND system for variable resistance type 1
- Confirm that terminal sensor #5 is at **0 V**.

— If it is at **0 V**, inspect the sensor.
- If necessary, replace the sensor.

— If not, inspect for the following.
- Open or short circuit in harness
- Female terminal opening is loose open or short circuit in harness
- Coupler (pin holder) damage
- Pin discoloration (blackness)
- Harness/pin crimp is loose or disconnected.

Variable resistance type 2 (fuel tank level sensor and mass air flow (MAF) sensor)

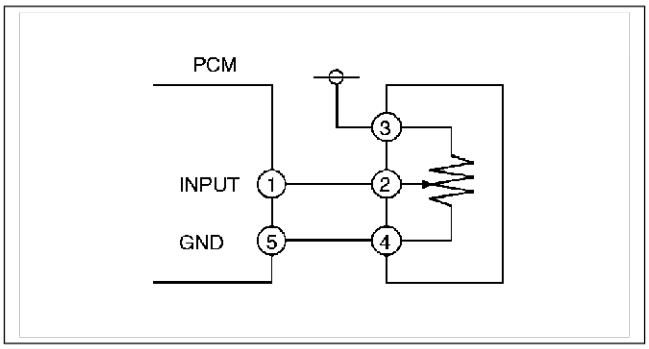

YMU103WA6

Investigate the GND system for variable resistance type 2
- Confirm that terminal sensor #4 is at **0 V**.

— If it is at **0 V**, inspect the sensor.
- If necessary, replace the sensor.

— If not at **0 V**, inspect for the following.
- Open circuit in harness
- Female terminal opening is loose.
- Coupler (pin holder) damage
- Pin discoloration (blackness)
- Harness/pin crimp is loose or disconnected.

Investigate the input signal system for variable resistance type 2

1. When you get an unusual signal, measure the #1 PCM terminal voltage.
   - If the #1 terminal voltage and the WDS or equivalent monitor voltage are the same, proceed to the next step.
   - If there is a difference of **0.5 V or above**, inspect for the following points concerning the PCM connector.
     — Female terminal opening is loose.
     — Coupler (pin holder) damage
     — Pin discoloration (blackness)
     — Harness/pin crimp is loose or disconnected.
2. Measure the #2 sensor terminal voltage.
   - If there is a **0.5 V or above** difference between the sensor and WDS or equivalent voltages, inspect the harness for open or short circuits.
   - If the sensor and WDS or equivalent voltages are the same, inspect the following points concerning the sensor connector.
     — Female terminal opening is loose.
     — Coupler (pin holder) damage
     — Pin discoloration (blackness)
     — Harness/pin crimp is loose or disconnected.
   - If there are no problems, proceed to next investigation below.

Investigate the electrical supply system for variable resistance type 2

- Confirm that the sensor #3 terminal is **B+**.
  - — If the measured voltage on the #3 terminal is **B+**, inspect the following points on the sensor connector.
  - — If there is no problem, inspect for the following.
    - Female terminal opening is loose.
    - Coupler (pin holder) damage
    - Pin discoloration (blackness)
  - — If the #3 terminal measures other than **B+**, inspect the following.
    - Open or short circuit in harness
    - Harness/pin crimp is loose or disconnected.

Thermistor type (IAT sensor and ECT sensor)

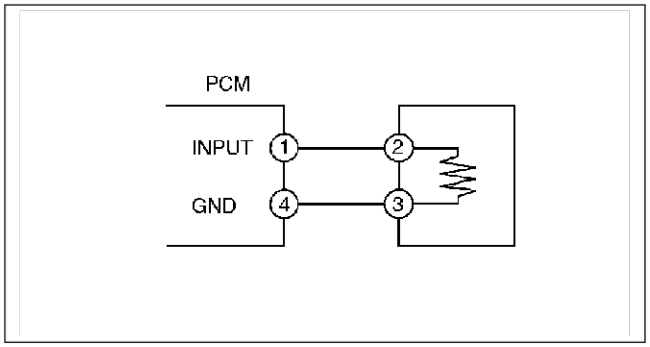

ZMU103WA7

F4

Investigate the input signal system for thermistor type

1. When you get an unusual signal, measure the #1 PCM terminal voltage.
   - If the #1 terminal voltage and the WDS or equivalent monitor voltage are the same, proceed to the next step.
   - If there is a difference of **0.5 V or above**, inspect the following points concerning the PCM connector.
     - — Female terminal opening loose
     - — Coupler (pin holder) damage
     - — Pin discoloration (blackness)
     - — Harness/pin crimp is loose or disconnected.
2. Measure the #2 sensor terminal voltage.
   - If there is a **0.5 V or above** difference between the sensor and WDS or equivalent voltages, inspect the harness for open or short circuits.
   - If the sensor and WDS or equivalent voltages are the same, inspect the following points concerning the sensor connector.
     - — Female terminal opening is loose.
     - — Coupler (pin holder) damage
     - — Pin discoloration (blackness)
     - — Harness/pin crimp is loose or disconnected.
   - If there are no problems, proceed to next investigation below.

Investigate the GND system for thermistor type

- Confirm that terminal sensor #3 is at **0 V**.
  - — If it is at **0 V**, inspect the sensor. If necessary, replace the sensor.
  - — If not, inspect for the following.
    - Open circuit in harness
    - Female terminal opening is loose.
    - Coupler (pin holder) damage
    - Pin discoloration (blackness)
    - Harness/pin crimp is loose or disconnected.

VSS

1. Measure the #1 PCM terminal voltage and confirm that it is at **0 V** or **5 V** when the ignition key at ON and the engine at idle.
   - If it is at **0 V** or **5 V**, intermittent concern exists. (See F4–247 INTERMITTENT CONCERN TROUBLESHOOTING.)
   - If not, inspect the following points concerning the PCM connector.
   - If there is no problem, inspect for the following.
     — Female terminal opening is loose.
     — Coupler (pin holder) damage
     — Pin discoloration (blackness)
     — Harness/pin crimp is loose or disconnected.

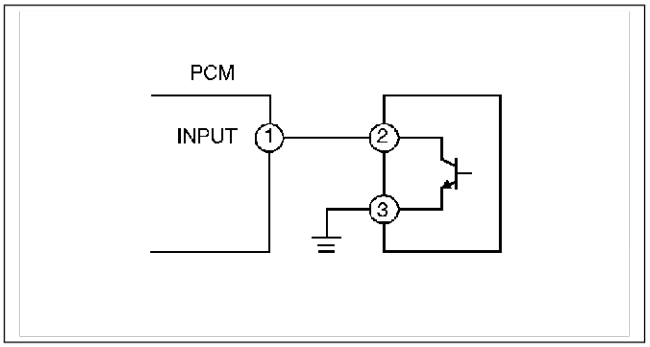

YMU103WA8

2. Measure the #2 sensor terminal voltage and confirm that it is at **0 V** or **5 V** when the ignition key at ON and the engine at idle.
   - If it is at **0 V** or **5 V**, intermittent concern exists. (See F4–247 INTERMITTENT CONCERN TROUBLESHOOTING.)
   - If not, inspect the following points concerning the sensor connector.
   - If there is no problem, inspect for the following.
     — Female terminal opening is loose.
     — Coupler (pin holder) damage
     — Pin discoloration (blackness)
     — Harness/pin crimp is loose or disconnected.
3. Confirm that the #3 terminal switch voltage is at **0 V**.
   - If it is at **0 V**, inspect the sensor. If necessary, replace the sensor.
     — If necessary, replace the sensor.
   - If not, inspect for the following.
     — Open circuit in harness
     — Female terminal opening is loose.
     — Coupler (pin holder) damage
     — Pin discoloration (blackness)
     — Harness/pin crimp is loose or disconnected.

Intake Manifold Vacuum Inspection

1. Verify air intake hoses are installed properly.
2. Start the engine and run it at idle.
3. Measure the manifold vacuum using a vacuum gauge.
   - If not as specified, inspect following.
     — Air suction at throttle body, intake manifold and PCV valve installation points
     — Accelerator cable free play
     — Fuel injector insulator
     — Engine compression

Specification
Above 60 kPa {450 mmHg, 18 inHg}

Idle Air Control Inspection
Engine coolant temperature compensation inspection

1. Connect the **SSTs** (WDS or equivalent) to DLC–2.
2. Select the PID/DATA MONITOR AND RECORD function on the WDS or equivalent display.
3. Select the following PIDs.
   - ECT
   - RPM
4. Verify that the engine is in cold condition, then start the engine.
5. Verify that the engine speed decreases as the engine warms up.
   - If the engine speed does not decrease or decreases slowly, inspect the following.
     — ECT sensor and related harness (See F4–100 ENGINE COOLANT TEMPERATURE (ECT) SENSOR INSPECTION.)
     — IAC valve and related harness (See F4–62 IDLE AIR CONTROL (IAC) VALVE INSPECTION.)

Fuel Injector Operation Inspection

STEP	INSPECTION		ACTION
1	• While cranking engine, inspect for fuel injector operation sound at each cylinder using a soundscope. • Is operation sound heard?	Yes	Fuel injector operation is okay.
		No	**All cylinders no heard:** • Go to next step. **Some cylinders no heard:** • Go to step 3.
2	• Carry out main relay operation inspection. • Is main relay operation normal?	Yes	Inspect following. • Fuel injector power system related wiring harness and connectors • PCM connectors • Fuel injector GND and related wiring harness and connectors
		No	Repair or replace malfunctioning part.
3	• Change fuel injector connector of not operating fuel injector and operating fuel injector. • Is operation sound heard?	Yes	Go to next step.
		No	Replace fuel injector.
4	• Are wiring harness and connectors of not operating fuel injector okay? (Open or short)	Yes	Inspect PCM terminal voltage of fuel injector signal.
		No	Repair or replace malfunctioning part.

Ignition Timing Control Inspection

1. Start the engine and run it at idle.
2. Warm up the engine to normal operating temperature.
3. Connect the **SSTs** (WDS or equivalent) to the DLC–2.
4. Select the PID/DATA MONITOR AND RECORD function on the WDS or equivalent display.
5. Select the SPARKADV PID.
6. Verify that SPARKADV PID is within the specification.

   Specification
   BTDC 4°—16° (10° ± 6°)

7. Increase the engine speed and verify that the SPARKADV PID value is advanced.
   - If it is not advanced, inspect the following.
     — CKP sensor and related harness (See F4–101 CRANKSHAFT POSITION (CKP) SENSOR INSPECTION.)
     — MAF sensor and related harness (See F4–96 MASS AIR FLOW (MAF)/INTAKE AIR TEMPERATURE (IAT) SENSOR INSPECTION.)

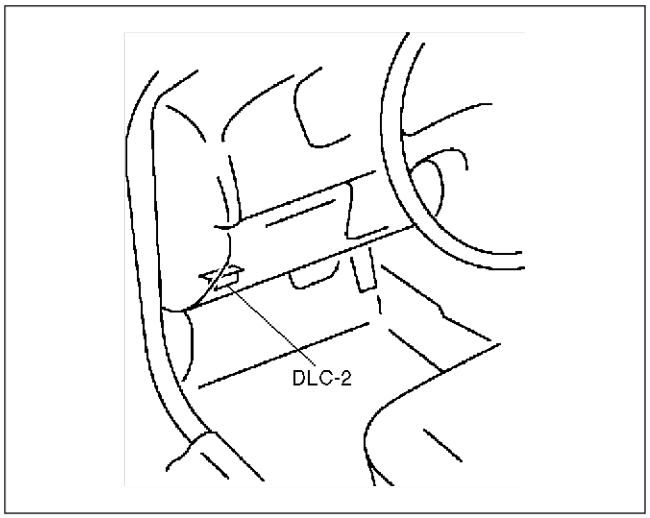

Z3U0102W001

F4

Spark Test

1. Disconnect the fuel pump relay.
2. Verify that each ignition coil and connector is connected properly.
3. Inspect the ignition system in the following procedure.

Warning

- **High voltage in the ignition system can cause strong electrical shock which can result in serious injury. Avoid direct contact to the vehicle body during the following spark test.**

STEP	INSPECTION		ACTION
1	• Disconnect ignition coil from spark plugs. • Remove spark plugs. • Reconnect spark plugs to ignition coil. • Ground spark plugs to engine. • Is strong blue spark visible at each cylinder while cranking?	Yes	Ignition system is okay.
		No	**Some cylinders do not spark:** • Go to next step. **All cylinders do not spark:** • Go to Step 4.
2	• Inspect spark plugs for damage, wear, carbon deposits and proper plug gap. • Are spark plugs okay?	Yes	Go to next step.
		No	Replace spark plugs, then go to Step.1.
3	• Inspect following wiring harnesses for open or short: — Ignition coil No.1 terminal B—PCM terminal 26 — Ignition coil No.2 terminal B—PCM terminal 52 — Ignition coil No.3 terminal B—PCM terminal 78 — Ignition coil No.4 terminal B—PCM terminal 1 — Ignition coil No.5 terminal B—PCM terminal 27 — Ignition coil No.6 terminal B—PCM terminal 82 • Are wiring harnesses okay?	Yes	Inspect and replace ignition coil. (See G–16 IGNITION COIL INSPECTION.)
		No	Repair or replace malfunctioning part, then go to Step.1.
4	• Measure voltage at terminal A in each ignition coils. • Is voltage reading B+?	Yes	Go to next step.
		No	Inspect power supply circuit of ignition coils.
5	• Does PCM connector or ignition coil connectors have poor connection?	Yes	Repair or replace connector, then go to Step.1.
		No	Go to next step.
6	• Are following parts okay? — CKP sensor and crankshaft pulley — PCM terminal 21/22 voltage **Specification** **Approx. 1.5 V**	Yes	Inspect for open or short in wiring harness and connector of CKP sensor.
		No	Repair or replace malfunctioning part, then go to Step.1.

Main Fan/Additional Fan Motor Operation Inspection

1. Cool down engine.
2. Connect WDS or equivalent to the DLC-2.
3. Turn ignition switch ON.
4. Turn A/C switch OFF.
5. Verify that main fan/additional fan are not operated.
   - If main fan/additional fan are operated, verify FAN_DUTY PID.
     - — If FAN_DUTY PID value is not 0%, inspect following PIDs.
       - ECT (voltage)
       - ACSW
     - — If FAN_DUTY PID value is 0%, inspect follow.
       - Fan control module
       - Open or short to ground circuit between fan control module and PCM
6. Increase FAN_DUTY PID value from 0% to 100% gradually by Datalogger/simulation function. Verify that both main fan and additional fan operation speed increase in accordance with FAN_DUTY PID value changes.

   Note
   - Main fan and additional fan are not rotate when FAN_DUTY PID value is lower than 30% by fan motor internal friction.

   - If there is a problem, perform following steps.

   (1) Verify clicking sound of fan relay when turn ignition switch OFF to ON.
   - If there is no clicking sound, inspect follows.
     - — Fan relay
     - — Open circuit between main relay and fan relay
   - If clicking sound heard, go to next step.

   (2) Inspect following parts in order in accordance with fan operation condition.
   - Both main fan and additional fan do not operate.
     - — Open circuit between fan control module and fan relay
     - — Open circuit in fan control module ground harness
     - — Poor connection of fan control module connector
     - — Fan control module
   - Only main fan does not operate.
     - — Open or short to ground circuit between fan control module and main fan motor
     - — Poor connection of fan control module connector and/or main fan motor connector
     - — Main fan motor malfunction
     - — Fan control module
   - Only additional fan does not operate.
     - — Open or short to ground circuit between fan control module and additional fan motor
     - — Poor connection of fan control module connector and/or additional fan motor connector
     - — Additional fan motor malfunction
     - — Fan control module

End Of Ste

FUEL AND EMISSION CONTROL SYSTEMS [MZR-CD (RF Turbo)]

FEATURES

OUTLINE F5-4
OUTLINE OF CONSTRUCTION F5-4
FEATURES F5-4
SPECIFICATIONS F5-4
CONTROL SYSTEM DIAGRAM F5-5
CONTROL SYSTEM WIRING DIAGRAM F5-6
INTAKE-AIR SYSTEM F5-9
OUTLINE F5-9
STRUCTURAL VIEW F5-10
FUEL SYSTEM F5-11
OUTLINE F5-11
STRUCTURAL VIEW F5-12
COMMON RAIL INJECTION SYSTEM F5-13
SUPPLY PUMP DESCRIPTION F5-14
SUCTION CONTROL VALVE DESCRIPTION F5-16
COMMON RAIL DESCRIPTION F5-17
FUEL INJECTOR DESCRIPTION F5-18
EXHAUST SYSTEM F5-20
OUTLINE F5-20
STRUCTURAL VIEW F5-20
EMISSION SYSTEM F5-21
OUTLINE F5-21
STRUCTURAL VIEW F5-22
SYSTEM DIAGRAM F5-23
WARM UP OXIDATION CATALYTIC CONVERTER DESCRIPTION F5-23
EGR WATER COOLER DESCRIPTION F5-23
CONTROL SYSTEM F5-24
OUTLINE F5-24
STRUCTURAL VIEW F5-26
BLOCK DIAGRAM F5-28
CONTROL DEVICE AND CONTROL RELATIONSHIP CHART F5-30
PCM F5-31
FUEL PRESSURE SENSOR F5-31
CAMSHAFT POSITION (CMP) SENSOR F5-32
CRANKSHAFT POSITION (CKP) SENSOR F5-33
CALIBRATION RESISTOR F5-34
INJECTOR DRIVER MODULE (IDM) F5-35
IDLE SPEED CONTROL F5-37
GLOW CONTROL F5-37
VARIABLE SWIRL CONTROL (VSC) F5-38
BOOST PRESSURE CONTROL F5-39
FUEL INJECTION AMOUNT CONTROL F5-40
FUEL INJECTION TIMING CONTROL F5-42
MULTIPLE FUEL INJECTION CONTROL F5-44
FUEL PRESSURE CONTROL F5-46
EGR CONTROL F5-47
ELECTRICAL FAN CONTROL F5-49
A/C CUT-OFF CONTROL F5-51
IMMOBILIZER SYSTEM F5-52
CONTROLLER AREA NETWORK (CAN) F5-52
ON-BOARD DIAGNOSTIC F5-53
OUTLINE F5-53
DTC F5-53
KOEO/KOER SELF-TEST F5-55
PID/DATA MONITOR AND RECORD F5-57
SIMULATION TEST F5-57

SERVICE

LOCATION INDEX F5-58
INTAKE-AIR SYSTEM F5-58
FUEL SYSTEM F5-60
EMISSION SYSTEM F5-61
CONTROL SYSTEM F5-62
ENGINE TUNE-UP F5-64
ENGINE TUNE-UP PREPARATION F5-64
IDLE SPEED INSPECTION F5-64
CORRECTION PROCEDURE F5-65
INTAKE-AIR SYSTEM F5-66
VACUUM TUBE ROUTING DIAGRAM F5-66
INTAKE-AIR SYSTEM REMOVAL/INSTALLATION F5-66
TURBOCHARGER INSPECTION F5-68
GUIDE BLADE ACTUATOR INSPECTION F5-69
VARIABLE BOOST CONTROL (VBC) SOLENOID VALVE INSPECTION F5-70
VARIABLE BOOST CONTROL (VBC) CHECK VALVE INSPECTION F5-71
VARIABLE SWIRL CONTROL (VSC) VALVE ACTUATOR INSPECTION F5-71
VARIABLE SWIRL CONTROL (VSC) SOLENOID VALVE INSPECTION F5-72
GLOW PLUG REMOVAL/INSTALLATION F5-73
GLOW PLUG INSPECTION F5-73
GLOW PLUG LEAD INSPECTION F5-73
ACCELERATOR PEDAL COMPONENT REMOVAL/INSTALLATION F5-74
ACCELERATOR PEDAL COMPONENT DISASSEMBLY/ASSEMBLY F5-74
FUEL SYSTEM F5-75
BEFORE REPAIR PROCEDURE F5-75
AFTER REPAIR PROCEDURE F5-75
FUEL TANK REMOVAL/INSTALLATION F5-76
FUEL TANK INSPECTION F5-78
NONRETURN VALVE INSPECTION F5-78
FUEL FILTER COMPONENT REMOVAL/INSTALLATION F5-79
FUEL FILTER COMPONENT DISASSEMBLY/ASSEMBLY F5-79
FUEL WARMER INSPECTION F5-80
SEDIMENTOR WATER DRAINING F5-80
SEDIMENTOR SWITCH INSPECTION F5-81
SUPPLY PUMP REMOVAL/INSTALLATION F5-82
SUPPLY PUMP INSPECTION F5-82
SUCTION CONTROL VALVE INSPECTION F5-83
COMMON RAIL INSPECTION F5-83
FUEL INJECTOR REMOVAL/INSTALLATION F5-84
FUEL INJECTOR INSPECTION F5-85

EXHAUST SYSTEM F5-86
EXHAUST SYSTEM INSPECTION F5-86
EXHAUST SYSTEM REMOVAL/INSTALLATION F5-86
EMISSION SYSTEM F5-88
EGR VALVE REMOVAL/INSTALLATION F5-88
EGR VALVE INSPECTION F5-88
EGR SOLENOID VALVE (VACUUM) INSPECTION F5-89
EGR SOLENOID VALVE (VENT) INSPECTION F5-90
EGR CONTROL SOLENOID VALVE INSPECTION F5-91
INTAKE SHUTTER VALVE ACTUATOR INSPECTION F5-92
INTAKE SHUTTER SOLENOID VALVE INSPECTION F5-92
CONTROL SYSTEM F5-94
PCM REMOVAL/INSTALLATION F5-94
PCM INSPECTION F5-95
CLUTCH SWITCH INSPECTION F5-98
NEUTRAL SWITCH INSPECTION F5-99
IDLE SWITCH INSPECTION F5-100
IDLE SWITCH ADJUSTMENT F5-101
ACCELERATOR POSITION SENSOR INSPECTION F5-102
ACCELERATOR POSITION SENSOR ADJUSTMENT F5-103
MASS AIR FLOW (MAF)/INTAKE AIR TEMPERATURE (IAT) SENSOR INSPECTION F5-104
INTAKE AIR TEMPERATURE (IAT) SENSOR NO.2 INSPECTION F5-105
ENGINE COOLANT TEMPERATURE (ECT) SENSOR REMOVAL/INSTALLATION F5-106
ENGINE COOLANT TEMPERATURE (ECT) SENSOR INSPECTION F5-106
FUEL TEMPERATURE SENSOR INSPECTION F5-107
BOOST SENSOR INSPECTION F5-108
FUEL PRESSURE SENSOR INSPECTION F5-109
CAMSHAFT POSITION (CMP) SENSOR REMOVAL/INSTALLATION F5-110
CAMSHAFT POSITION (CMP) SENSOR INSPECTION F5-110
CRANKSHAFT POSITION (CKP) SENSOR REMOVAL/INSTALLATION F5-111
CRANKSHAFT POSITION (CKP) SENSOR INSPECTION F5-112
CALIBRATION RESISTOR INSPECTION F5-113
INJECTOR DRIVER MODULE (IDM) INSPECTION F5-114
ON-BOARD DIAGNOSTIC F5-115
ON-BOARD DIAGNOSTIC TEST F5-115
DTC CONFIRMATION PROCEDURE F5-115
KOEO/KOER SELF-TEST PROCEDURE F5-116
AFTER REPAIR PROCEDURE F5-116
DTC TABLE F5-117
DTC P0016 ..... F5-118
DTC P0088 ..... F5-119
DTC P0091 ..... F5-120
DTC P0092 ..... F5-122
DTC P0093 ..... F5-123
DTC P0097 ..... F5-124
DTC P0098 ..... F5-126
DTC P0102 ..... F5-128
DTC P0103 ..... F5-130
DTC P0107 ..... F5-132
DTC P0108 ..... F5-134
DTC P0112 ..... F5-136
DTC P0113 ..... F5-138
DTC P0117 ..... F5-140
DTC P0118 ..... F5-142
DTC P0121 ..... F5-144
DTC P0122 ..... F5-146
DTC P0123 ..... F5-148
DTC P0182 ..... F5-150
DTC P0183 ..... F5-152
DTC P0191 ..... F5-153
DTC P0192 ..... F5-154
DTC P0193 ..... F5-156
DTC P0200 ..... F5-158
DTC P0221 ..... F5-160
DTC P0222 ..... F5-161
DTC P0223 ..... F5-163
DTC P0300 ..... F5-165
DTC P0336 ..... F5-166
DTC P0337 ..... F5-167
DTC P0341 ..... F5-169
DTC P0342 ..... F5-170
DTC P0380 ..... F5-172
DTC P0500 ..... F5-174
DTC P0510 ..... F5-176
DTC P0512 ..... F5-178
DTC P0606 ..... F5-179
DTC P0661 ..... F5-180
DTC P0662 ..... F5-182
DTC P0850 ..... F5-184
DTC P1190 ..... F5-186
DTC P1602 ..... F5-188
DTC P1603 ..... F5-190
DTC P1604 ..... F5-191
DTC P1621 ..... F5-191
DTC P1622 ..... F5-192
DTC P1623 ..... F5-192
DTC P1624 ..... F5-193
DTC P2228 ..... F5-193
DTC P2229 ..... F5-194
TROUBLESHOOTING F5-195
INTERMITTENT CONCERN TROUBLESHOOTING F5-195
SYMPTOM DIAGNOSTIC INDEX F5-197
SYMPTOM QUICK DIAGNOSIS CHART F5-199
NO.1 MELTING OF MAIN OR OTHER FUSES F5-204
NO.2 MIL ILLUMINATES F5-205
NO.3 WILL NOT CRANK F5-205
NO.4 HARD START/LONG CRANK/ERRATIC START/ERRATIC CRANK F5-206
NO.5 ENGINE STALLS-AFTER START/AT IDLE F5-208
NO.6 CRANKS NORMALLY BUT WILL NOT START F5-211
NO.7 SLOW RETURN TO IDLE F5-214
NO.8 ENGINE RUNS ROUGH/ROLLING IDLE F5-216
NO.9 FAST IDLE/RUNS ON F5-219
NO.10 LOW IDLE/STALLS DURING DECELERATION F5-220

NO.11 ENGINE STALLS/QUITS, ENGINE RUNS ROUGH, MISSES, BUCK/JERK, HESITATION/ STUMBLE, SURGES F5-222
NO.12 LACK/LOSS OF POWER-ACCELERATION/CRUISE F5-225
NO.13 KNOCKING/PINGING F5-228
NO.14 POOR FUEL ECONOMY F5-231
NO.15 EMISSION COMPLIANCE F5-234
NO.16 HIGH OIL CONSUMPTION/LEAKAGE F5-237
NO.17 COOLING SYSTEM CONCERNS-OVERHEATING F5-238
NO.18 COOLING SYSTEM CONCERNS-RUNS COLD F5-240
NO.19 EXCESSIVE BLACK SMOKE F5-241
NO.20 FUEL ODOR (IN ENGINE COMPARTMENT) F5-243
NO.21 ENGINE NOISE F5-244
NO.22 VIBRATION CONCERNS (ENGINE) .. F5-246
NO.23 A/C DOES NOT WORK SUFFICIENTLY F5-248
NO.24 A/C ALWAYS ON OR A/C COMPRESSOR RUNS CONTINUOUSLY . F5-249
NO.25 A/C DOES NOT CUT OFF UNDER WIDE OPEN THROTTLE CONDITIONS F5-250
NO.26 CONSTANT VOLTAGE F5-251
ENGINE CONTROL SYSTEM OPERATION INSPECTION F5-253

OUTLINE

OUTLINE OF CONSTRUCTION

AME430218881W01

- The common rail injection system has been adopted for new MPV (LW) MZR-CD (RF Turbo) engine models.
- The fuel and emission control system is essentially carried over from that of the current 626 (GF)/626 Station Wagon (GW) RF Turbo engine models, except for the following features. (See 626 626 Station Wagon Workshop Manual Supplement 1688-1*-00G.)

End Of Sie

FEATURES

AME430218881W02

Improved Emission Performance

- An EGR water cooler has been adopted.
- Warm up oxidation catalytic converter capacity has been increased.
- Calibration resistors have been adopted.
- Injection amount learning has been adopted.
- Multiple fuel injection control has been adopted.
- Fuel pressure control has been adopted.
- EGR control has been changed.
- MAF learning has been adopted.

Reduced Noise

- Injection amount learning has been adopted.
- Multiple fuel injection control has been adopted.

Improved Reliability

- Electrical fan control has been changed.

System Simplification

- CAN has been adopted.

Improved Serviceability

- DTCs, PID monitoring items, and simulation items have been added.
- MIL and DLC-2 have been adopted.
- The OBD tester has been changed from NGS tester to WDS.
- A KOEO/KOER self-test function has been adopted.

End Of Sie

SPECIFICATIONS

AME430218881W03

Item		New MPV (LW) MZR-CD (RF Turbo)	Current 626 (GF/GW) RF Turbo	
			Euro 3 Regulation models	Non Euro 3 Regulation models
Air cleaner element	Type	Non woven fabric (dry)		Paper element (oil permeated)
Supercharger	Type	Turbocharger		
Glow plug	Type	Metal		
Pump	Type	Supply pump	FIP (VE)	
Fuel tank	Capacity (L {US gal, Imp gal})	75 {19.8, 16.5}	64 {16.9, 14.1}	
Catalyst	Type	Warm up oxidation catalyst, Oxidation catalyst		Oxidation catalyst
EGR control	Type	Duty control		
PCV system	Type	Closed		

Bold frames: New specifications

End Of Sie

CONTROL SYSTEM DIAGRAM

AME430218881W04

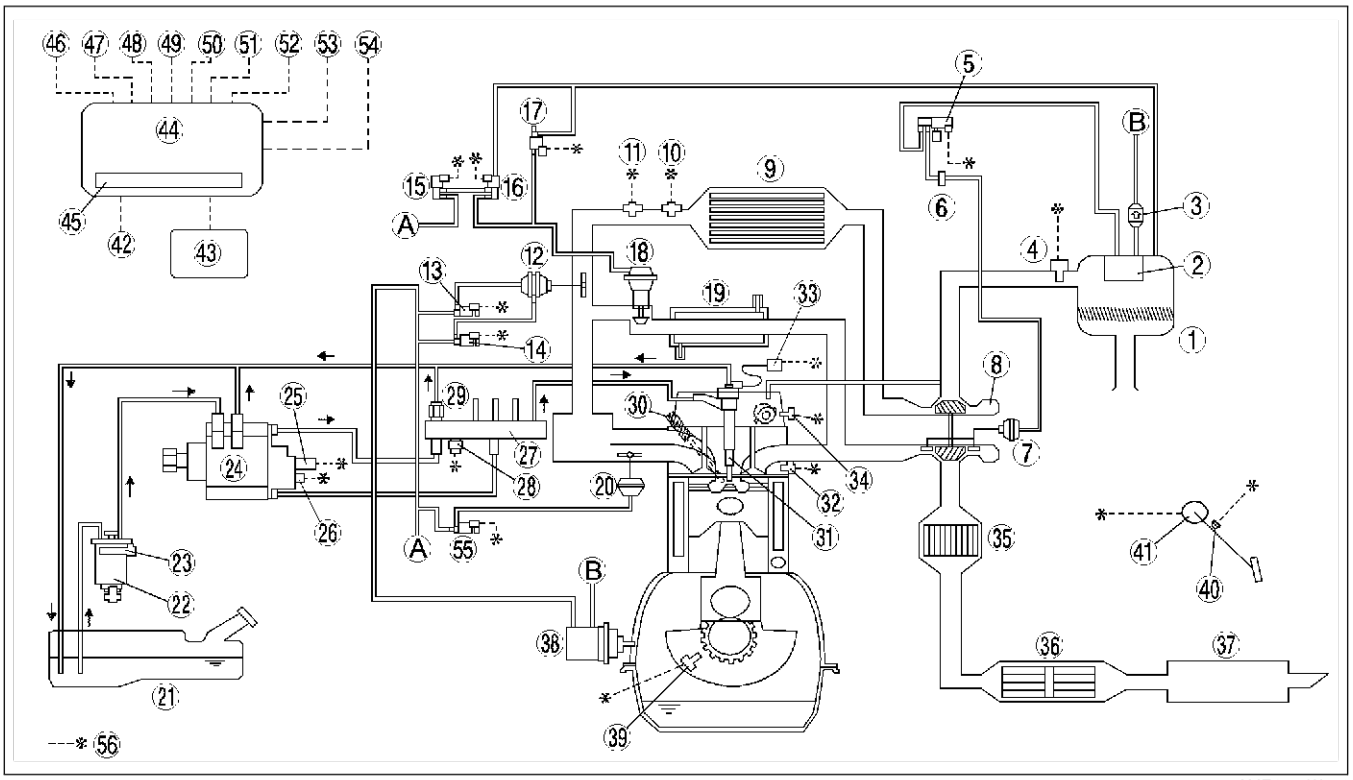

AME4302W001

1	Air cleaner
2	Vacuum chamber
3	VBC Check valve
4	MAF/IAT sensor
5	VBC solenoid valve
6	Vacuum damper
7	Guide blade actuator
8	Turbocharger
9	Charge air cooler
10	IAT sensor No.2
11	Boost sensor
12	Intake shutter valve actuator
13	Intake shutter solenoid valve (half)
14	Intake shutter solenoid valve (full)
15	EGR solenoid valve (vacuum)
16	EGR solenoid valve (vent)
17	EGR control solenoid valve
18	EGR valve
19	EGR water cooler
20	VSC valve actuator
21	Fuel tank
22	Fuel filter
23	Fuel warmer
24	Supply pump
25	Suction control valve
26	Fuel temperature sensor
27	Common rail
28	Fuel pressure sensor

29	Fuel pressure limiter
30	Glow plug
31	Fuel injector
32	ECT sensor
33	Calibration resistor
34	CMP sensor
35	Warm up oxidation catalytic converter
36	Oxidation catalytic converter
37	Silencer
38	Vacuum pump
39	CKP sensor
40	Idle switch
41	Accelerator position sensor
42	Glow plug relay
43	IDM
44	PCM
45	BARO sensor
46	PCM control relay
47	Engine switch
48	Starter (starter signal)
49	Neutral switch
50	Clutch switch
51	A/C switch
52	DLC (TEN)
53	VSS
54	CAN Bus
55	VSC solenoid valve
56	To PCM

End Of Sta

CONTROL SYSTEM WIRING DIAGRAM

AME430218881W05

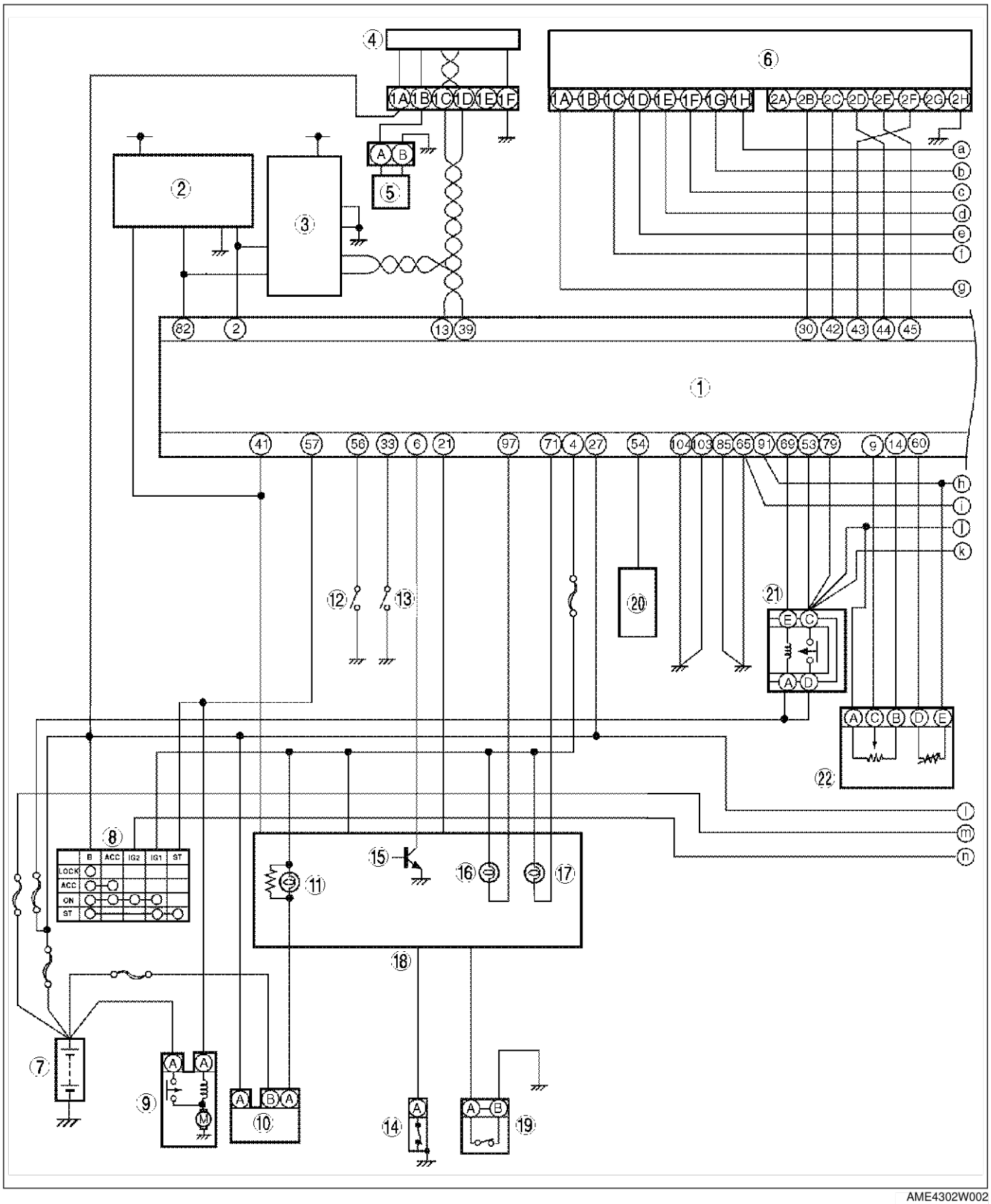

AME4302W002

1	PCM
2	DLC
3	DLC-2
4	Water heater unit
5	Fuel pump
6	IDM
7	Battery
8	Engine switch
9	Starter
10	Generator
11	Generator warning light
12	Neutral switch
13	Clutch switch
14	Oil pressure switch
15	VSS
16	Glow indicator light
17	MIL
18	Instrument cluster
19	Sedimentor switch
20	Immobilizer unit
21	PCM control relay
22	MAF/IAT sensor

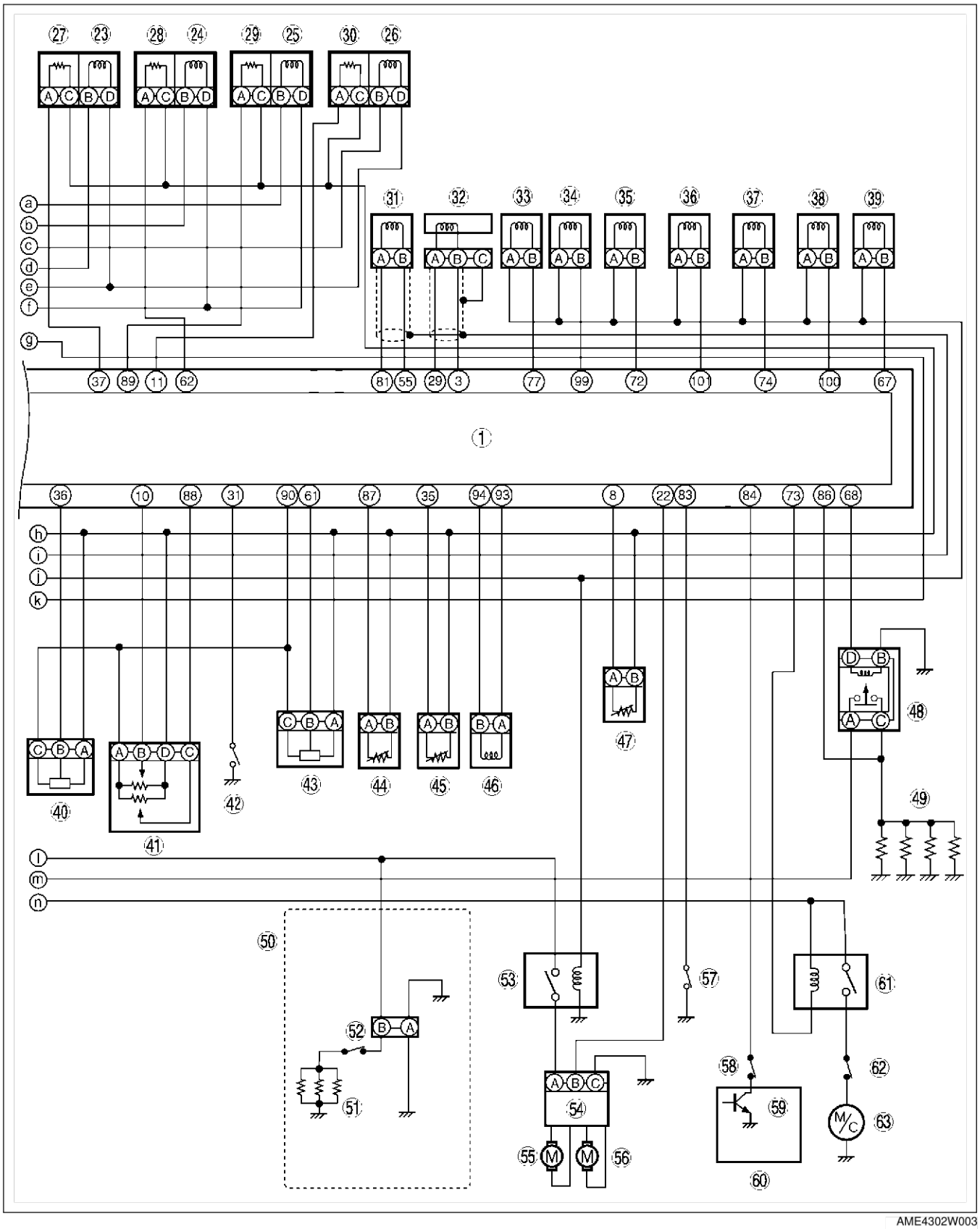
AME4302W003

23	Fuel injector No.1
24	Fuel injector No.2
25	Fuel injector No.3
26	Fuel injector No.4
27	Calibration resistor No.1
28	Calibration resistor No.2
29	Calibration resistor No.3
30	Calibration resistor No.4
31	CMP sensor
32	CKP sensor
33	EGR control solenoid valve
34	EGR solenoid valve (vacuum)
35	EGR solenoid valve (vent)
36	VSC solenoid valve
37	Intake shutter solenoid valve (half)
38	Intake shutter solenoid valve (full)
39	VBC solenoid valve
40	Boost sensor
41	Accelerator position sensor
42	Idle switch
43	Fuel pressure sensor

44	ECT sensor
45	Fuel temperature sensor
46	Suction control valve
47	IAT sensor No.2
48	Glow plug relay
49	Glow plug
50	With fuel warmer
51	Fuel warmer
52	Vacuum switch
53	Main fan relay
54	Fan control module
55	Main fan
56	Additional fan
57	Refrigerant pressure switch (middle)
58	Refrigerant pressure switch (low)
59	A/C switch
60	A/C amplifier
61	A/C relay
62	Refrigerant pressure switch (high)
63	Magnetic clutch

End Of Sie

INTAKE-AIR SYSTEM

OUTLINE

AME431001005W02

- The control system is essentially carried over from that of the current 626 (GF)/626 Station Wagon (GW) RF Turbo engine models, except for the following features. (See 626 626 Station Wagon Workshop Manual Supplement 1688-1*-00G.)

×:Applied —: Not applied

Item	New MPV (LW) MZR-CD (RF Turbo)	Current 626 (GF/GW) RF Turbo	Remark for new model
Fresh-air duct (integrated with resonance chamber)	×		Same function as 626 (GF/GW) RF Turbo engine model Shape has been changed.
Air cleaner	×		Same function as 626 (GF/GW) RF Turbo engine model Shape has been changed.
Turbocharger	×		Same function as 626 (GF/GW) RF Turbo engine model
Charge air cooler	×		Same function as 626 (GF/GW) RF Turbo engine model Shape has been changed.
Intake manifold	×		Same function as 626 (GF/GW) RF Turbo engine model
VBC system	×		Same function as 626 (GF/GW) RF Turbo engine model
VSC system	×		Same function as 626 (GF/GW) RF Turbo engine model
Glow plug	×		Same function as 626 (GF/GW) RF Turbo engine model
Glow plug lead	×		Same function as 626 (GF/GW) RF Turbo engine model
Glow plug relay	×		Same function as 626 (GF/GW) RF Turbo engine model

End Of Sie

STRUCTURAL VIEW

AME431001005W03

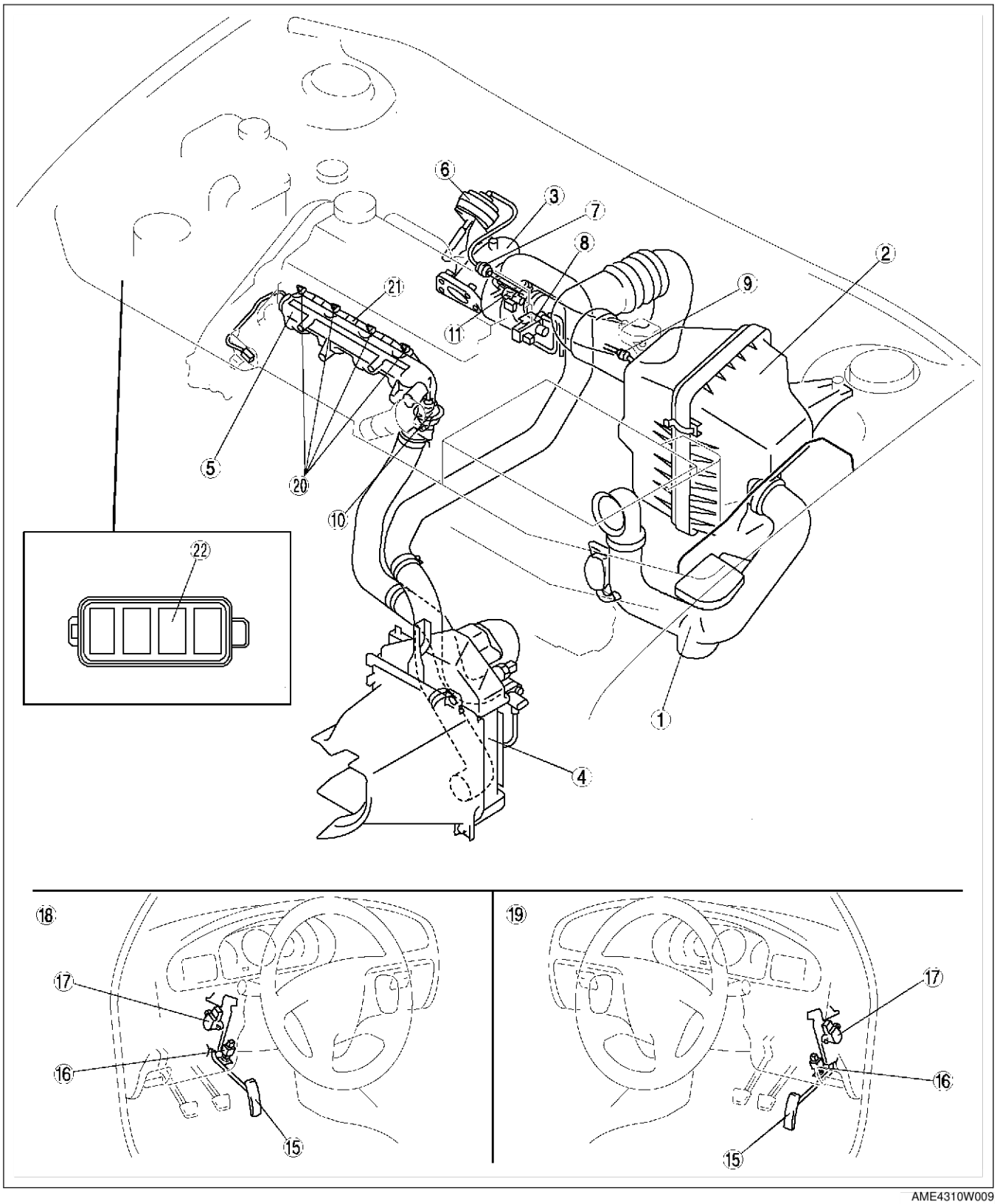

AME4310W009

Intake airflow

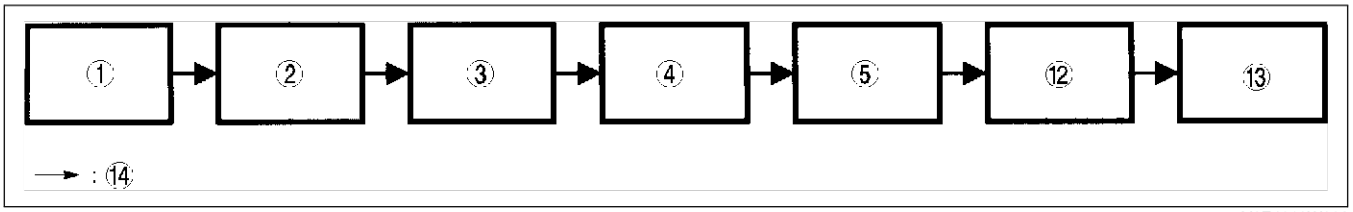

Y6E4010W003

1	Fresh-air duct (integrated with resonance chamber)
2	Air cleaner
3	Turbocharger
4	Charge air cooler
5	Intake manifold
6	Guide blade actuator
7	VBC vacuum chamber
8	VBC solenoid valve
9	VBC check valve
10	VSC valve actuator
11	VSC solenoid valve

12	Intake port (double tangential port)
13	Combustion chambers
14	Intake airflow
15	Accelerator pedal
16	Idle switch
17	Accelerator position sensor
18	L.H.D.
19	R.H.D.
20	Glow plug
21	Glow plug lead
22	Glow plug relay

End Of Sie

FUEL SYSTEM

OUTLINE

AME431201006W01

- The fuel system is essentially carried over from that of the current 626 (GF)/626 Station Wagon (GW) RF Turbo engine models, except for the following features. (See 626 626 Station Wagon Workshop Manual Supplement 1688-1*-00G.)

×:Applied —: Not applied

Item		New MPV (LW) MZR-CD (RF Turbo)	Current 626 (GF/GW) RF Turbo	Remark for new model
Fuel tank		×		Same function as 626 (GF/GW) RF Turbo engine model Shape has been changed
Fuel gauge sender unit		×		Same function as 626 (GF/GW) RF Turbo engine model Shape has been changed
Fuel filter body	Fuel filter	×		Same function as 626 (GF/GW) RF Turbo engine model
	Priming pump	×		Same function as 626 (GF/GW) RF Turbo engine model
	Fuel warmer	×		Same function as 626 (GF/GW) RF Turbo engine model
Common rail injection system		×	—	Newly adopted

End Of Sie

STRUCTURAL VIEW

AME431201006W02

Engine room side

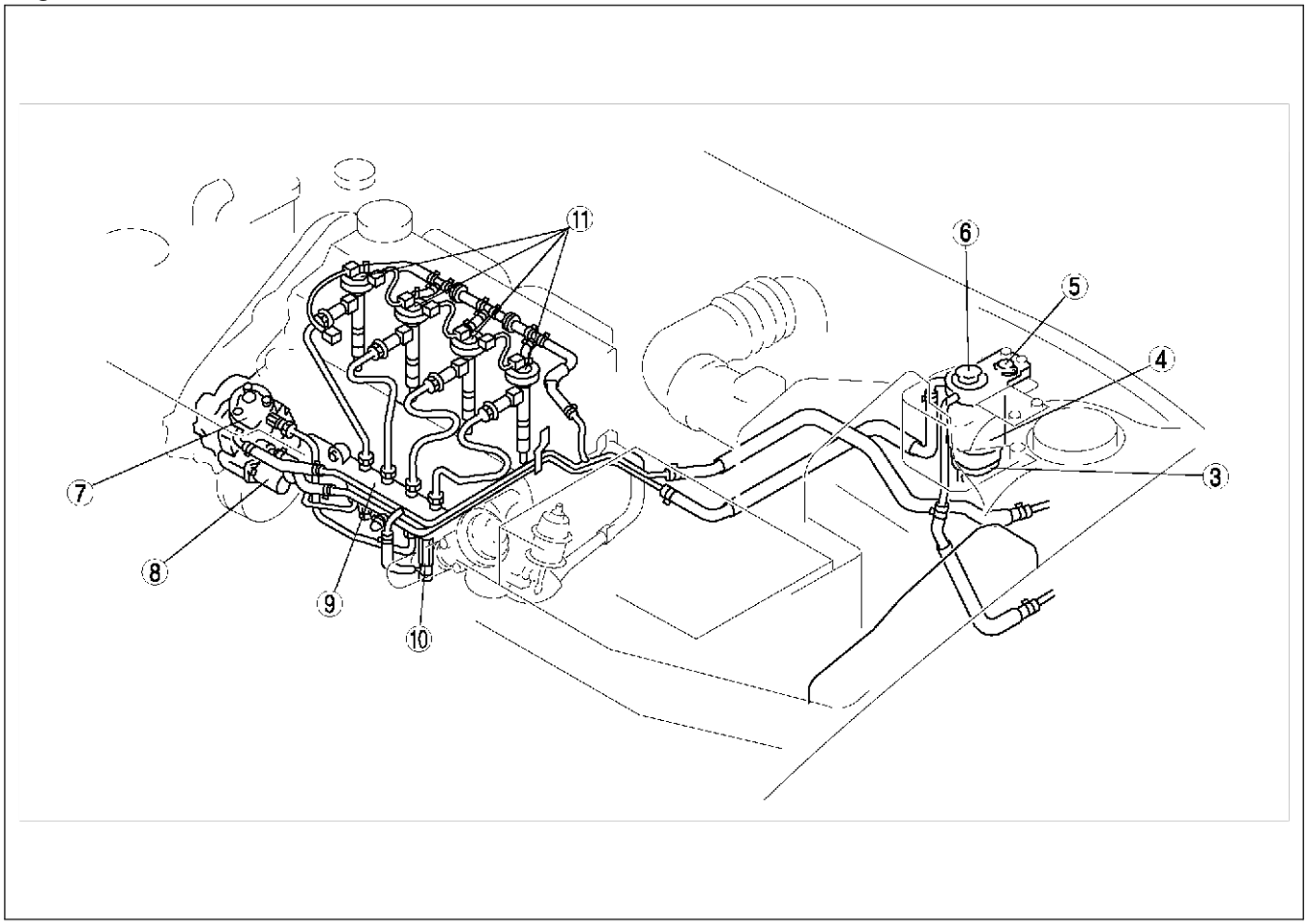

AME4312W009

Fuel tank side

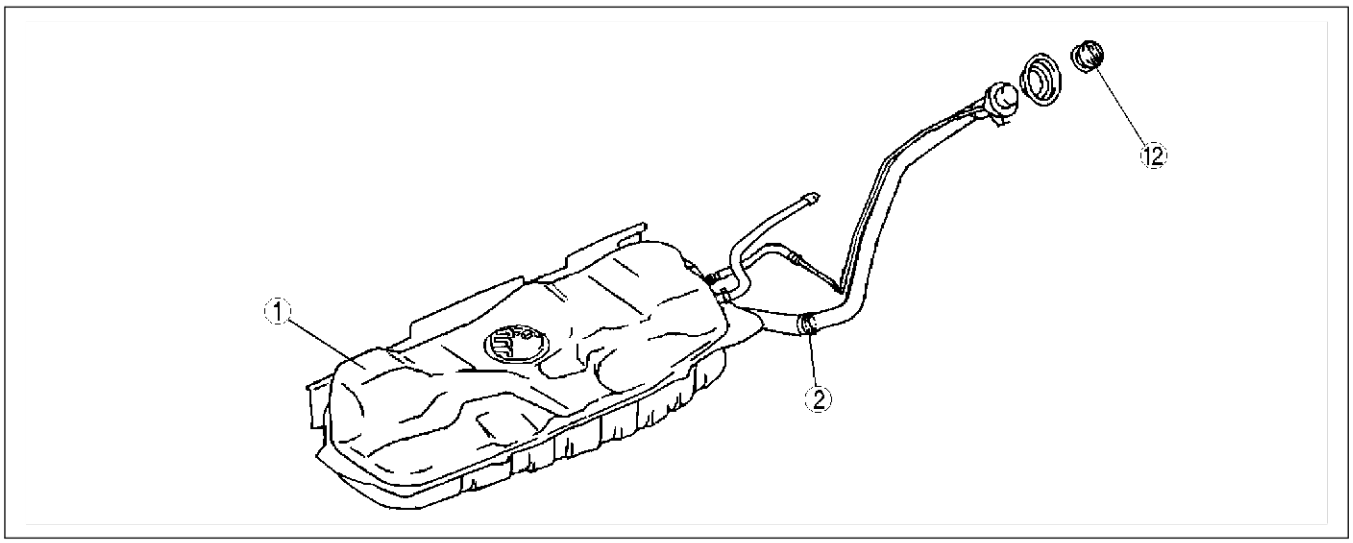

AME4312W017

1	Fuel tank
2	Nonreturn valve
3	Sedimentor switch
4	Fuel filter
5	Fuel warmer
6	Priming pump

7	Supply pump
8	Suction control valve
9	Common rail
10	Fuel pressure limiter
11	Fuel injector
12	Fuel filler cap

COMMON RAIL INJECTION SYSTEM

AME431201006W05

Outline

- This system stores fuel under high pressure supplied by the supply pump in the common rail, and injects it through the electromagnetic injectors.
- The PCM controls both fuel injection amount and timing by sending a signal via the IDM to the injector electromagnetic valve.
- Since fuel is highly pressurized by the supply pump and stored in the common rail, injection pressure is constantly assured even at low speed since engine speed and load have no influence on the injection process.
- The PCM can precisely control the fuel injection amount and timing due to use of an electromagnetic valve in the injector that opens and closes the fuel path.
- Fuel is injected multiple times, including multiple auxiliary injections previous to the main injection. These multiple injections help to smooth the fuel combustion process, reducing noise and vibration levels as well as the amount of NOx in the exhaust.
- With the use of **180 MPa {1,835 kgf/cm^2, 26,107 psi}** ultra-high pressure injectors, engine output is improved and the amount of smoke and particulate matter in the exhaust is greatly reduced.

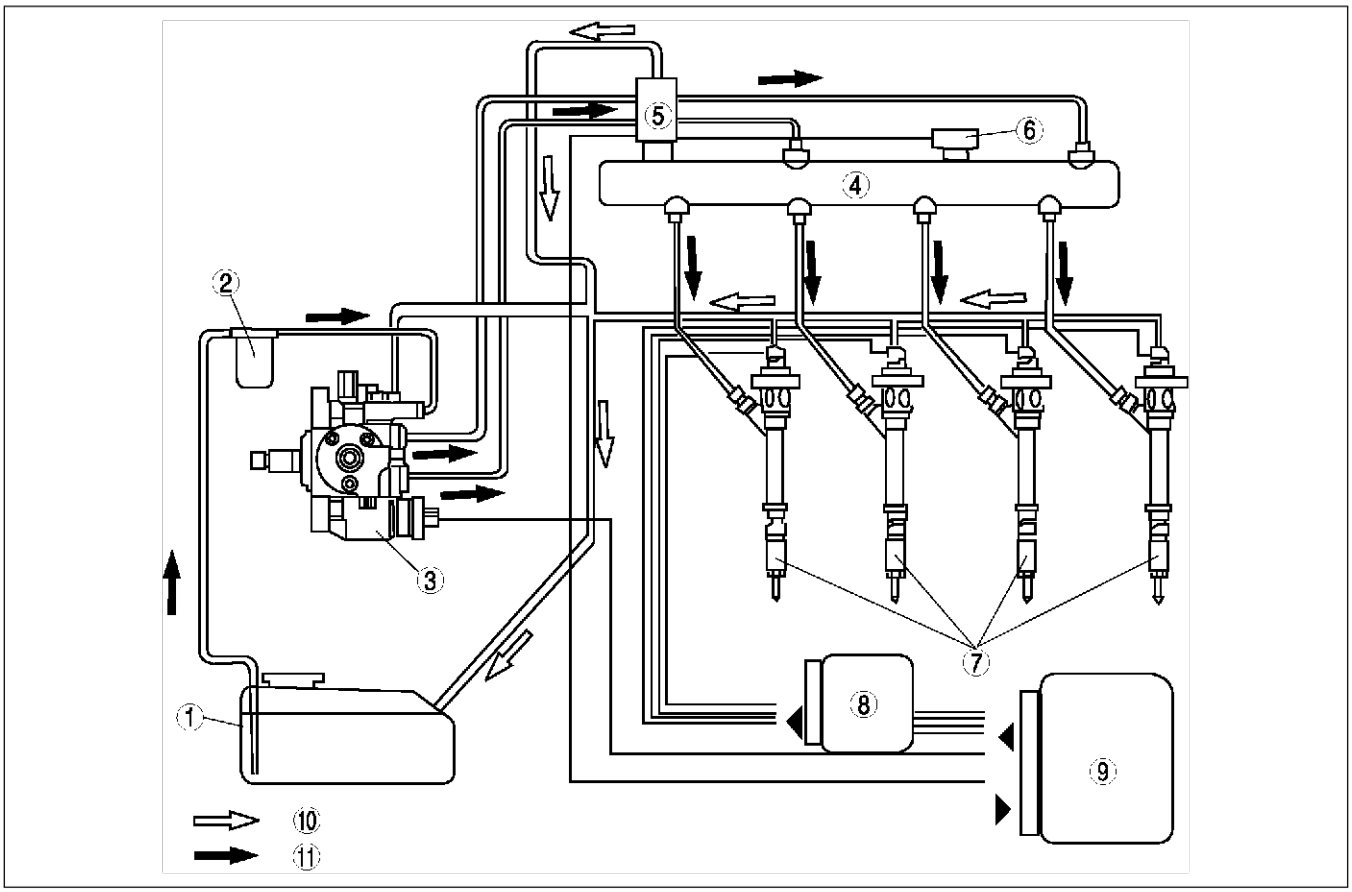

AME4312W024

1	Fuel tank
2	Fuel filter
3	Supply pump
4	Common rail
5	Fuel pressure limiter
6	Fuel pressure sensor

7	Fuel injector
8	IDM
9	PCM
10	Return fuel flow
11	Main fuel flow

End Of Sie

SUPPLY PUMP DESCRIPTION

AME431213350W01

Outline

- An electrically controlled supply pump with ultra-high discharge pressure and low-drive torque has been adopted.
- The pump housing is constructed of aluminum to achieve weight reduction.

Function

- An outer cam has been adopted, replacing the current inner cam, making ultra-high pressure of **180 MPa {1,835 kgf/cm^2, 26,107 psi}** possible.
- The supply pump intakes the proper fuel amount and pressure feeds the fuel to the common rail.

Structure

- The pump is composed of: a feed pump that siphons fuel from the fuel tank into the supply pump, a suction control valve that controls the intake amount of fuel to the pump chamber, a delivery valve that pressure feeds fuel to the common rail, and a pump body.
- The pump body is composed of a camshaft, outer cam and plunger.
- The pump is driven by the engine. A pulley on the front end of the pump is connected to the crankshaft via a belt, thus engine torque is transmitted to the outer cam.
- Two plungers are attached in opposing pairs on the outside of the outer cam. One is used for the intake stroke and the other is for the pressure feed stroke.
- The regulator valve regulates the fuel pressure within the pump and returns fuel to the fuel tank.

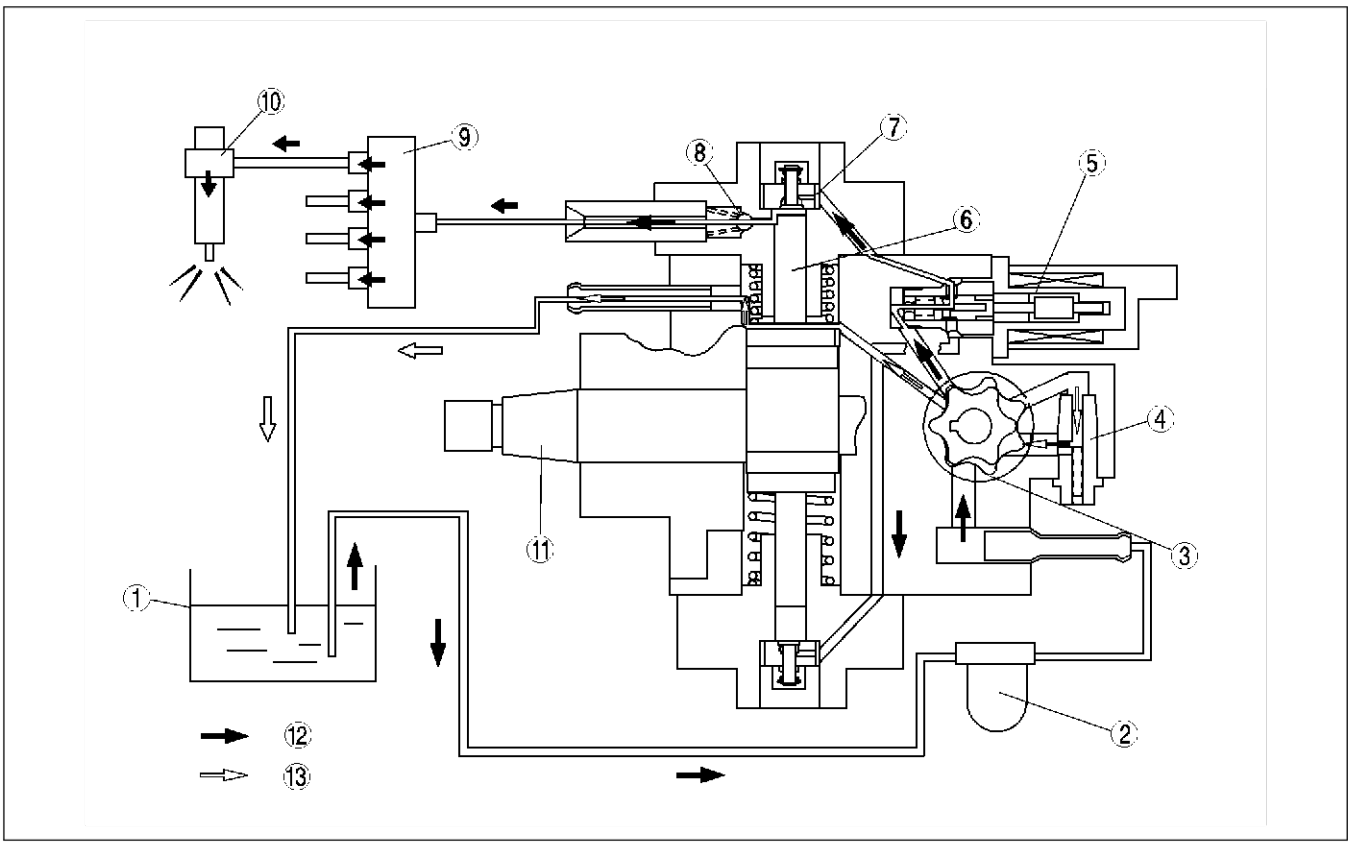

AME4312W013

1	Fuel tank
2	Fuel filter
3	Feed pump
4	Regulator valve
5	Suction control valve
6	Plunger
7	Inflow orifice

8	Outflow orifice
9	Common rail
10	Fuel injector
11	Camshaft
12	Main fuel flow
13	Return fuel flow

Operation

- Fuel is supplied by the feed pump and sent to the high-pressure chamber formed at the top-dead center point of the plunger through the suction control valve, which controls the intake amount, and passes through the intake valve.
- As the plunger moves towards the top-dead center point of the high-pressure chamber (direction of increasing fuel pressure), the fuel delivered to the chamber is compressed and sent out the delivery valve, through piping, and pressure fed into the common rail.
- The reciprocating movement of the cam ring is caused by the eccentric drive of the outer cam due to camshaft rotation. The outer face of the cam ring slides against the plungers, causing them to move reciprocally.

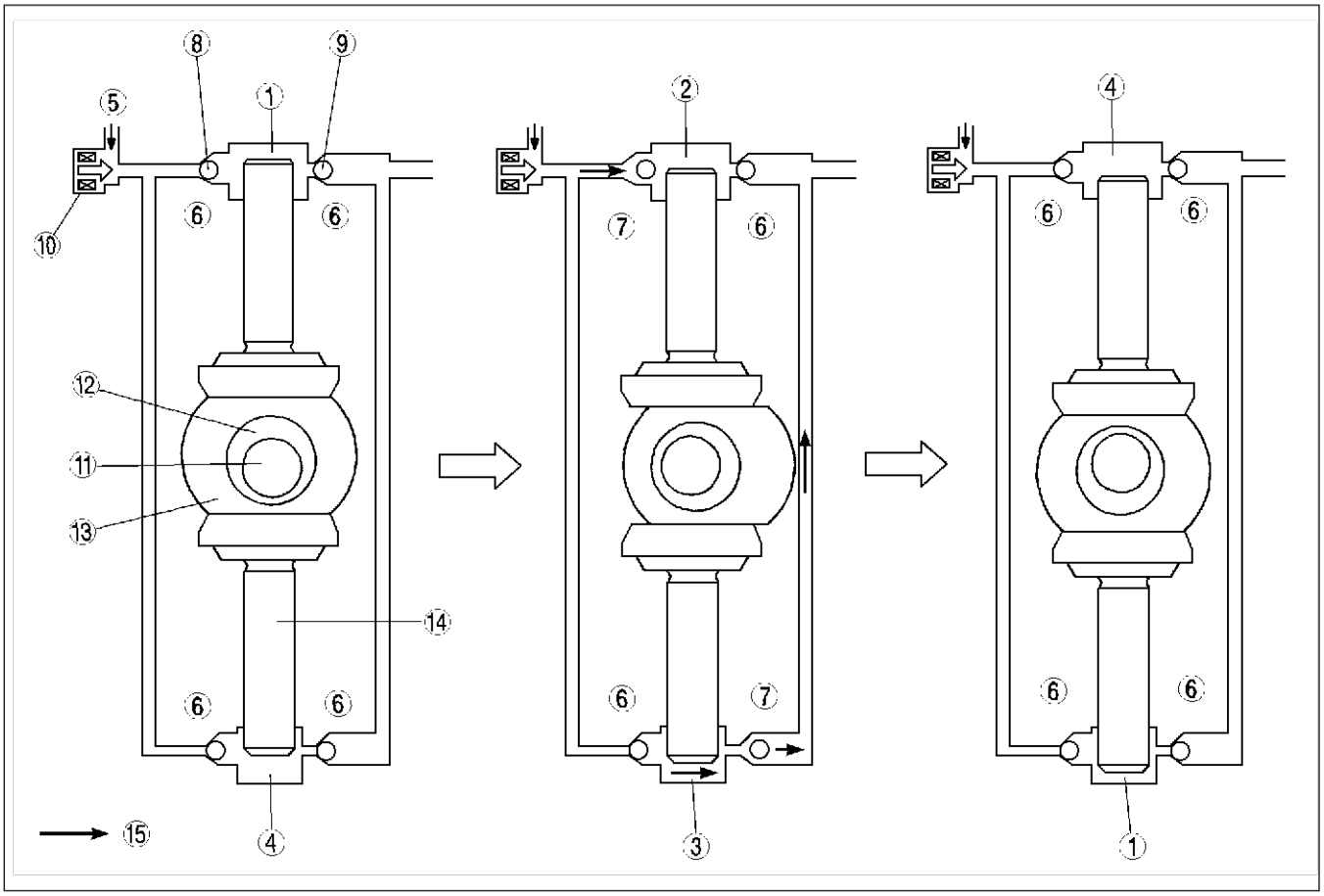

AME4312W014

1	Suction start
2	Fuel suction
3	Fuel delivery
4	Increasing pressure
5	From feed pump
6	Close
7	Open
8	Suction valve

9	Delivery valve
10	Suction control valve
11	Camshaft
12	Outer cam
13	Cam ring
14	Plunger
15	Fuel flow

End Of Sub

SUCTION CONTROL VALVE DESCRIPTION

AME431213350W05

Function

- By controlling the supply pump intake amount, the suction control valve controls the pressure pump feed amount and the pressure inside the fuel distribution pipe.
- The intake amount is determined by the total opening size of the valve as controlled by the duty value of the solenoid actuation current.
- The duty solenoid can adjust the open and close time ratio to control the intake amount by changing the ON time during a single cycle. For a normally open type suction control valve, making the duty ratio smaller increases the intake amount and, conversely, making the duty value larger decreases the intake amount.

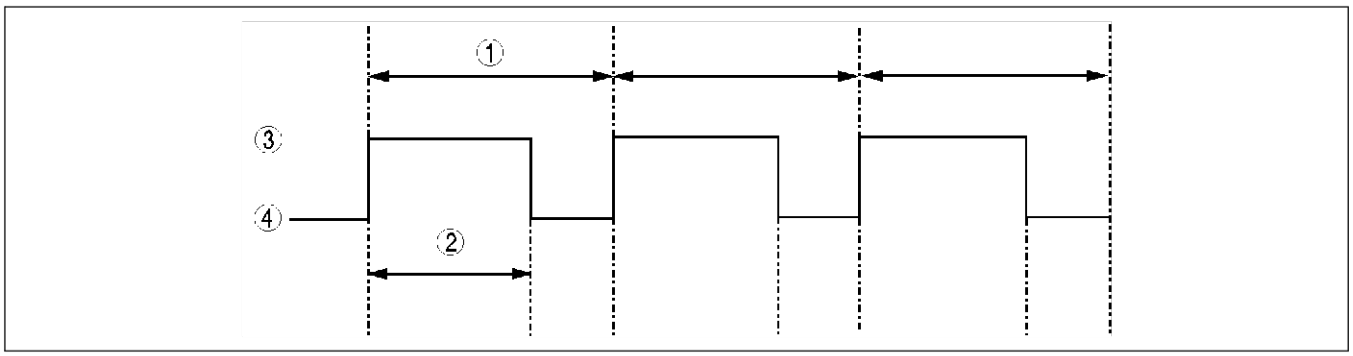

AME4312W025

1	1 cycle
2	Duty

3	On
4	Off

Structure and Operation

De-energized (open)

- The solenoid inner port is opened and fuel is sent into the control chamber.

1	Port
2	Valve

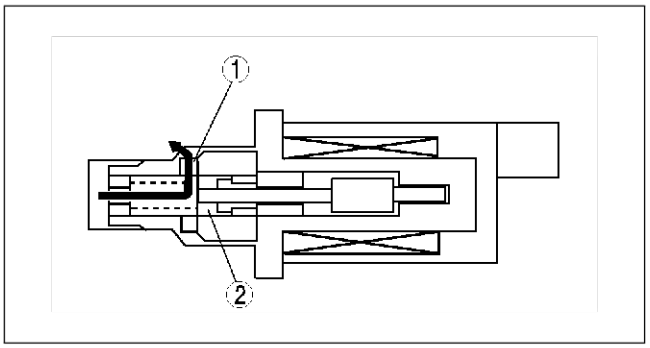

AME4312W026

Energized (closed)

- The solenoid inner port is closed. Fuel siphoned by the feed pump is returned to the fuel tank through the regulator valve..

1	Port
2	Valve

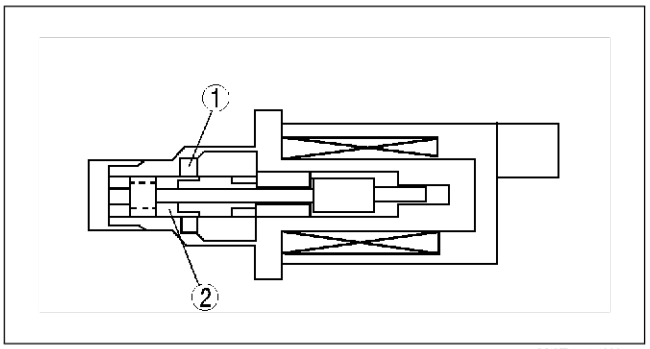

AME4312W027

End Of Sie

COMMON RAIL DESCRIPTION

AME431213015W01

Function

- Due to constant high-pressure fuel (**25—180 MPa {2.6—18.3 kgf/m^2, 3,626—26,106 psi}**) in the rail, electrically controlled injection is made possible.

Structure

- The PCM constantly maintains optimum pressure by monitoring the fuel pressure measurement signal from the fuel pressure sensor.
- As a consideration to safety, a fuel pressure limiter has been installed to mechanically drain fuel if the pressure goes **above 220 MPa {22.4 kgf/m^2, 31,908 psi}**.

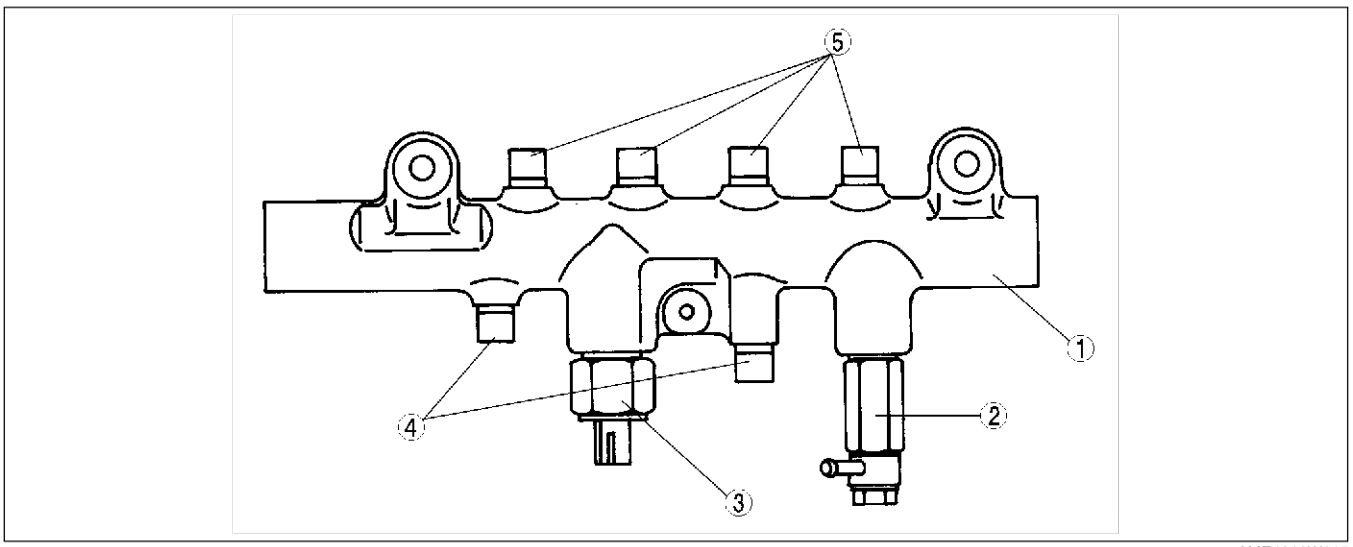

AME4312W015

1	Common rail
2	Fuel pressure limiter
3	Fuel pressure sensor

4	Connector (supply pump side)
5	Connector (fuel injector side)

End Of Sie

F5

FUEL INJECTOR DESCRIPTION

AME431213250W01

Function

- A small sized, energy saving, electromagnetically controlled injector has been adopted.
- A multiple fuel injection system has been adopted. The fuel injection amount and timing, as well as the division of the numerous injections are according to a PCM ON/OFF signal that controls the opening and closing of the electromagnetic valves.
- The construction and material of the electromagnetic valve has been modified to save energy and improve response.

Structure

- The injector is composed of: a command piston that controls the needle nozzle, a control chamber with an inflow/outflow orifice, and an electromagnetic valve that controls the inflow/outflow of fuel to the control chamber via an on/off function.
- The command piston is connected to the nozzle so that the up and down movement of the piston results in the opening and closing of the nozzle.
- The command chamber contains a single orifice plate to provide an inflow and outflow path.

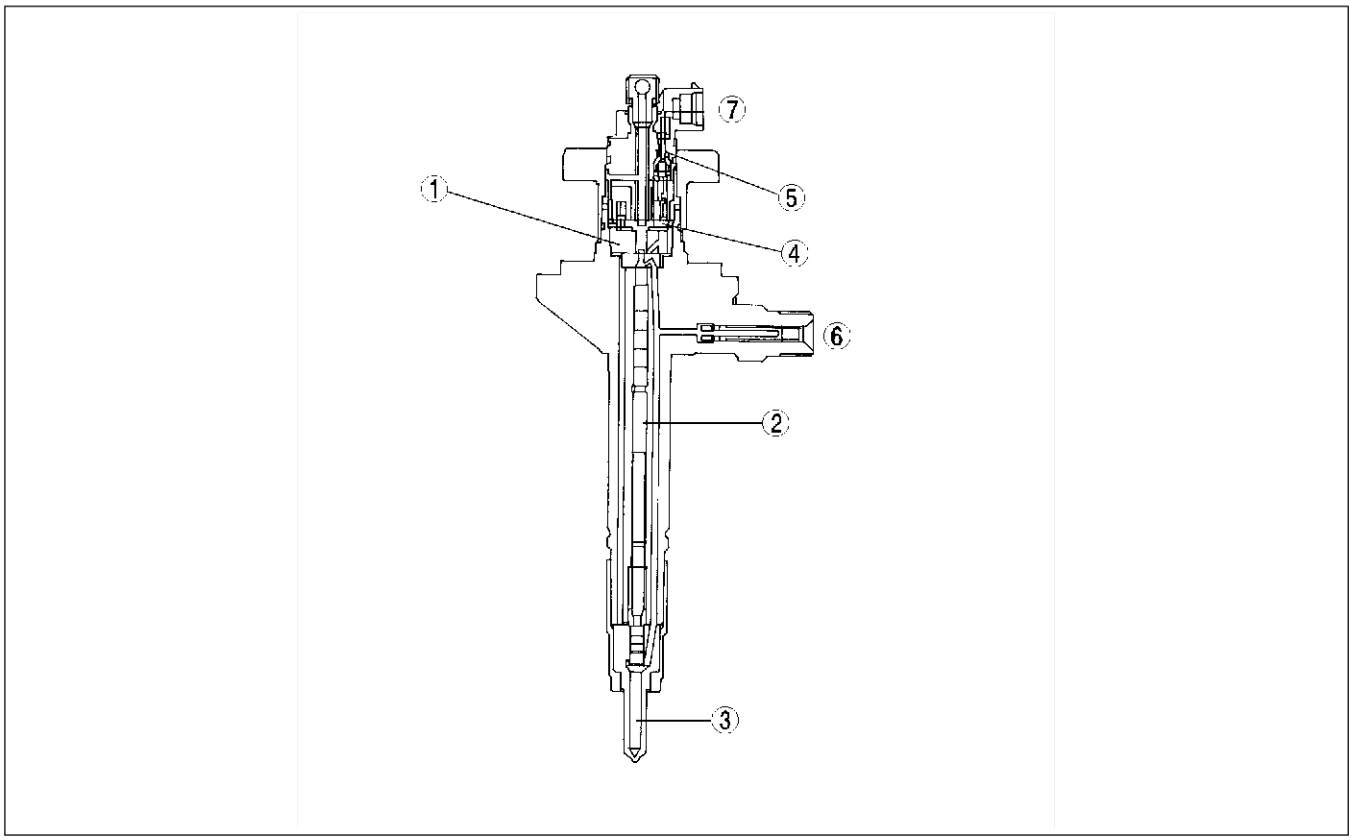

AME4312W011

1	Orifice plate
2	Command piston
3	Nozzle
4	Two-way valve

5	Solenoid
6	From common rail
7	To fuel tank

Operation

- The electromagnetic valve controls inflow/outflow of fuel to the command chamber by opening and closing according to an ON/OFF signal received from the PCM.

De-energized (off)

— When the electromagnetic valve is not energized, the two way valve is pushed down, closing the command chamber outflow orifice, and causing the pressurized fuel from the fuel distribution pipe to fill the command chamber. Due to this, the nozzle connected to the command piston is closed and injection does not occur.

Energized (on)

— When electromagnetic valve energization begins the two-way valve is pulled upwards, opening the command chamber outflow orifice and fuel outflow occurs. As fuel outflow occurs, the command chamber pressure decreases, drawing the command piston and the nozzle upward, and injection begins. Also, the fuel passed through the outflow orifice is used to lubricate the command piston and the fuel pressure is used to lift the piston up allowing injection to begin. As energization continues the nozzle is opened even more, providing maximum injection rate. When energization of the electromagnetic valve ends, the two-way valve once again moves down and the nozzle is closed instantaneously. Since the valve can be repeatedly energized any number of times, multiple pilot injection is made possible.

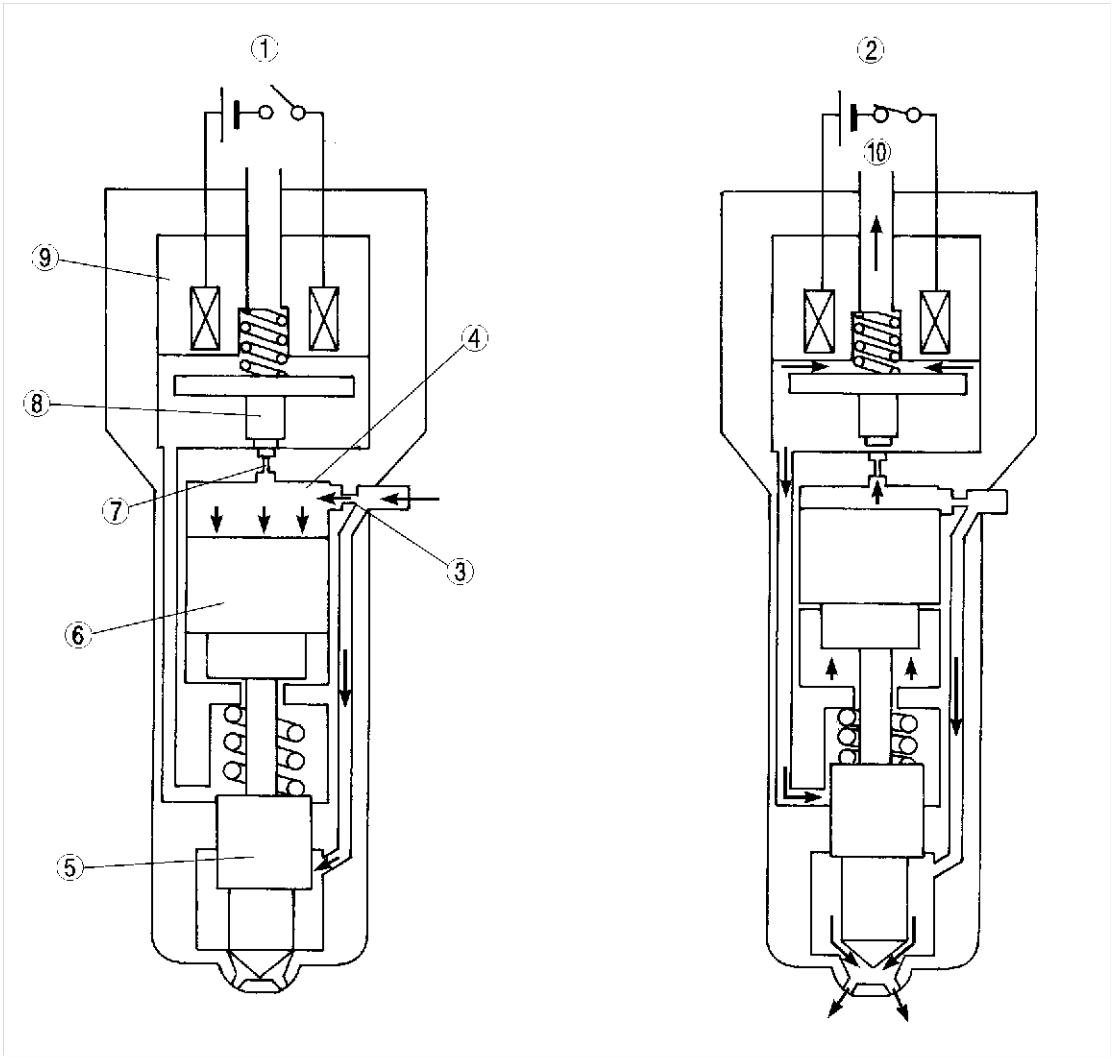

AME4312W012

1	De-energized (off)
2	Energized (on)
3	Inflow orifice
4	Command chamber
5	Nozzle

6	Command piston
7	Outflow orifice
8	Two-way valve
9	Solenoid
10	Return fuel flow

End Of Ste

EXHAUST SYSTEM

OUTLINE

AME431440000W05

- The exhaust system is essentially carried over from that of the current 626 (GF)/626 Station Wagon (GW) RF Turbo engine models, except for the following features. (See 626 626 Station Wagon Workshop Manual Supplement 1688-1*-00G.)
  - — The joint pipe has been eliminated to simplify exhaust system.
  - — The after silencer has been adopted to reduce noise.

End Of Sec

STRUCTURAL VIEW

AME431440000W06

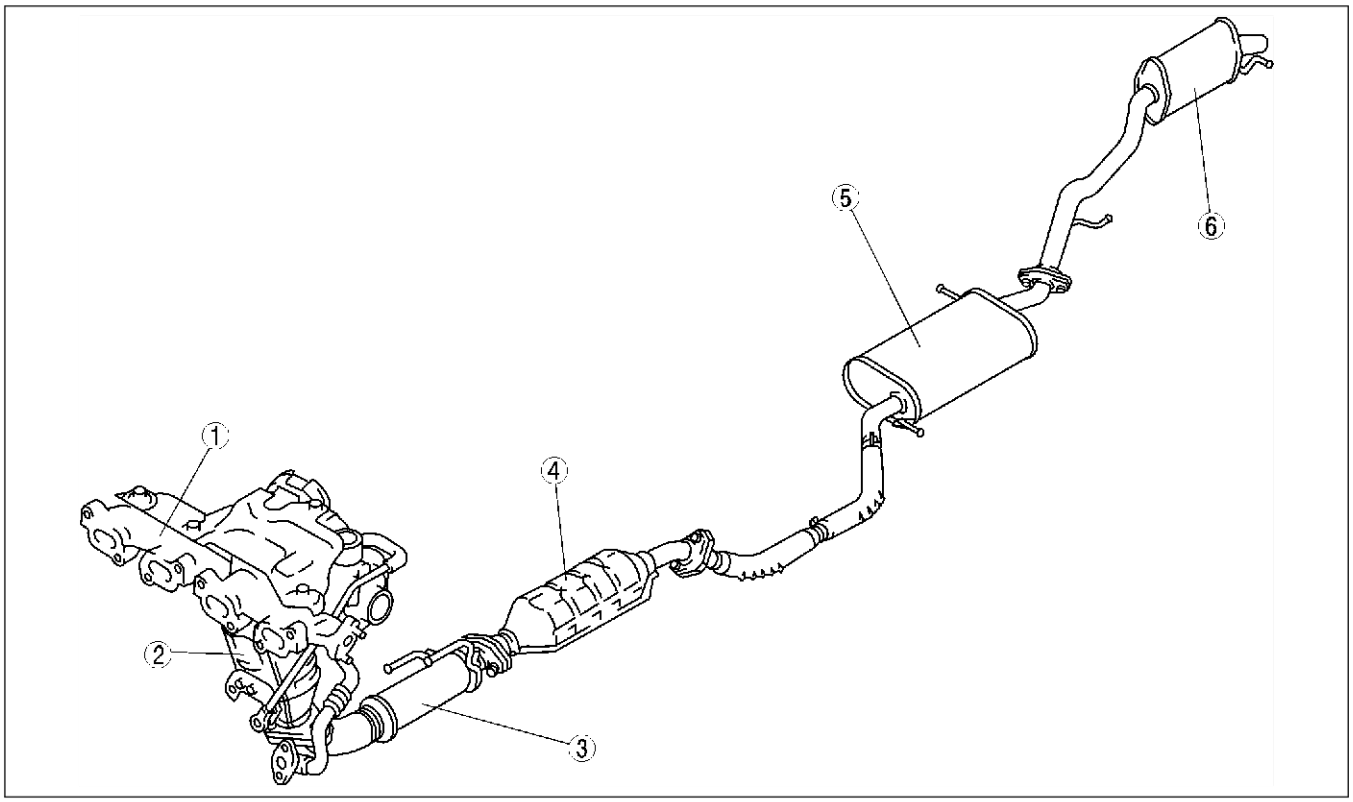

AME4314W001

1	Exhaust manifold
2	Warm up oxidation catalytic converter
3	Front pipe

4	Oxidation catalytic converter
5	Main silencer
6	After silencer

End Of Sec

EMISSION SYSTEM

OUTLINE

AME431601007W01

- The emission system is essentially carried over from that of the current 626 (GF)/626 Station Wagon (GW) RF Turbo engine models, except for the following features. (See 626 626 Station Wagon Workshop Manual Supplement 1688-1*-00G.)

×:Applied —: Not applied

Item	New MPV (LW) MZR-CD (RF Turbo)	Current 626 (GF/GW) RF Turbo	Remark for new model
Rollover valve	×		Same function as 626 (GF/GW) RF Turbo engine model
Check valve (two-way)	×		Same function as 626 (GF/GW) RF Turbo engine model
Intake shutter valve actuator	×		Same function as 626 (GF/GW) RF Turbo engine model
Intake shutter solenoid valve (half) (full)	×		Same function as intake shutter valve of 626 (GF/GW) RF Turbo engine model
EGR valve	×		Same function as 626 (GF/GW) RF Turbo engine model
EGR solenoid valve (vacuum) (vent)	×		Same function as 626 (GF/GW) RF Turbo engine model
EGR control solenoid valve	×	—	Same function as B series (UN) WL engine model (Euro 3 regulation model)
EGR water cooler	×	—	Same function as B series (UN) WL engine model (Euro 3 regulation model)
Warm up oxidation catalytic converter	×		Same function as 626 (GF/GW) RF Turbo engine model
Oxidation catalytic converter	×		Same function as 626 (GF/GW) RF Turbo engine model

End Of Sub

STRUCTURAL VIEW

AME431601007W02

Engine room side

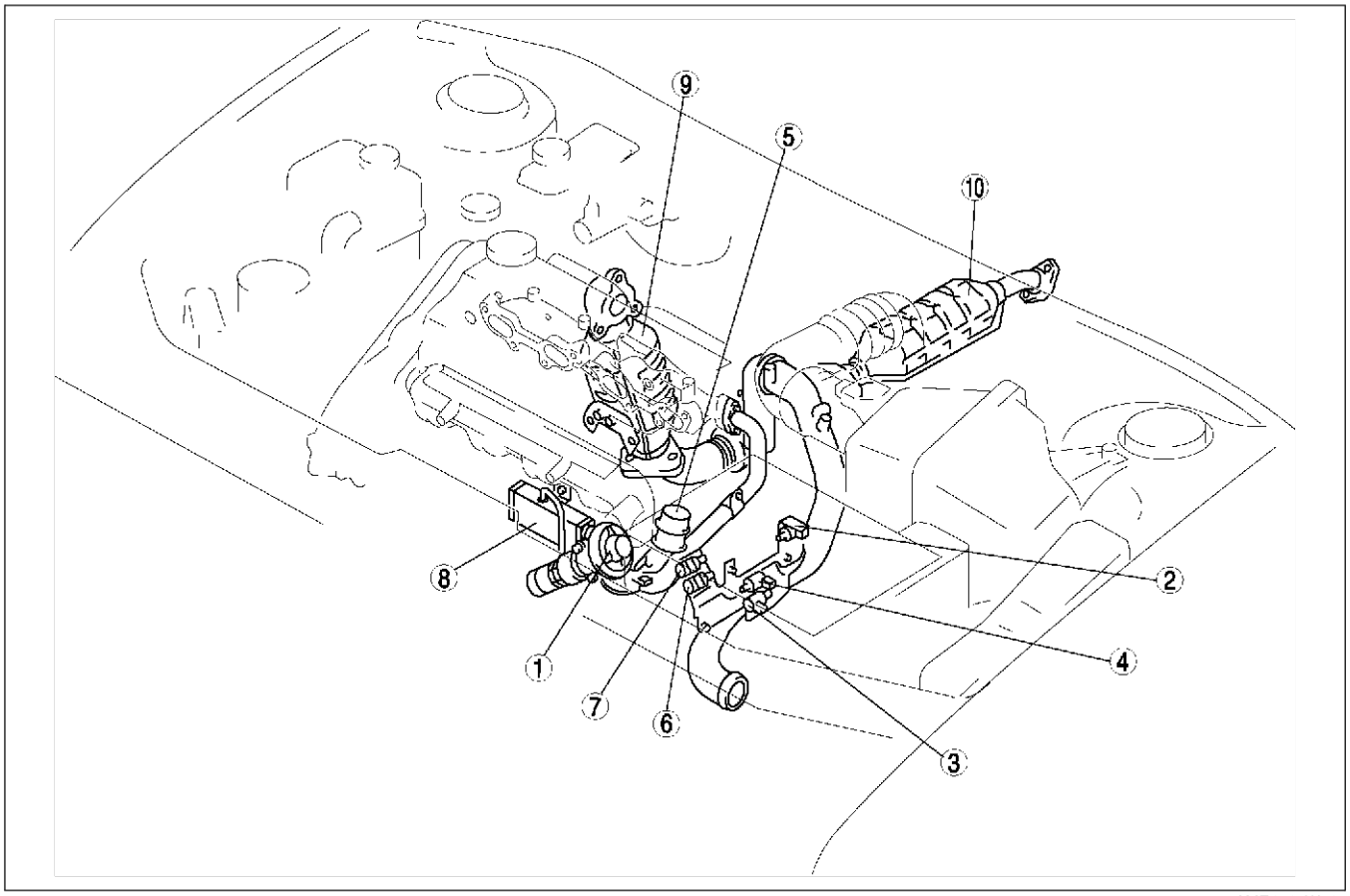

AME4316W015

Fuel tank side

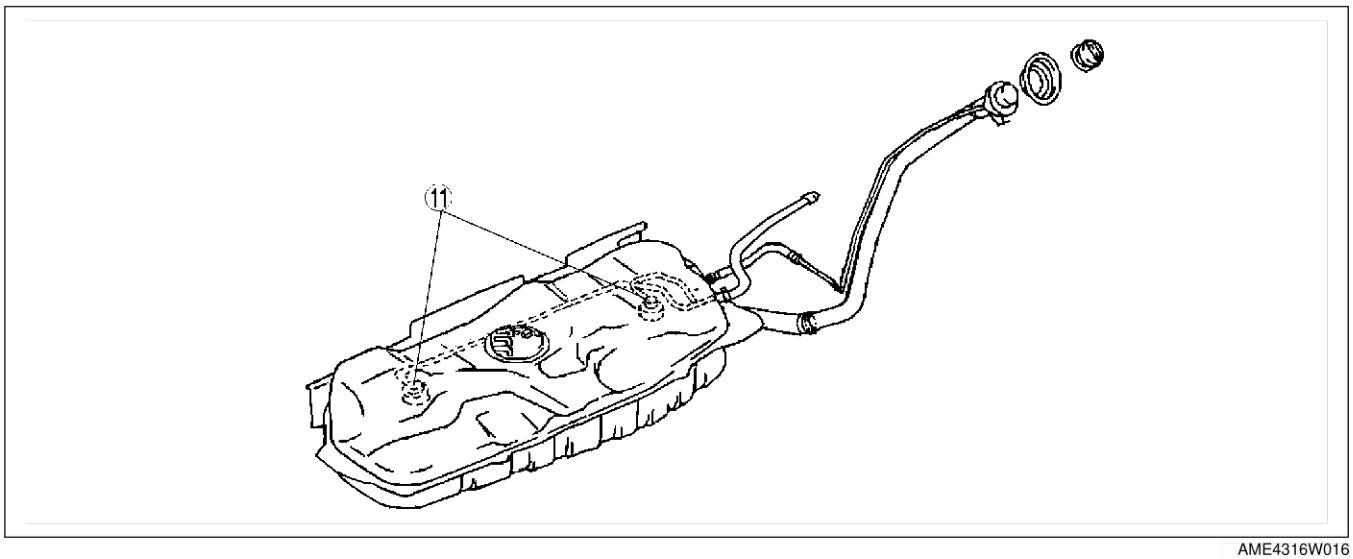

AME4316W016

1	EGR valve
2	EGR control solenoid valve
3	EGR solenoid valve (vacuum)
4	EGR solenoid valve (vent)
5	Intake shutter valve actuator
6	Intake shutter solenoid valve (half)

7	Intake shutter solenoid valve (full)
8	EGR water cooler
9	Warm up oxidation catalytic converter
10	Oxidation catalytic converter
11	Rollover valve

SYSTEM DIAGRAM

AME431601007W03

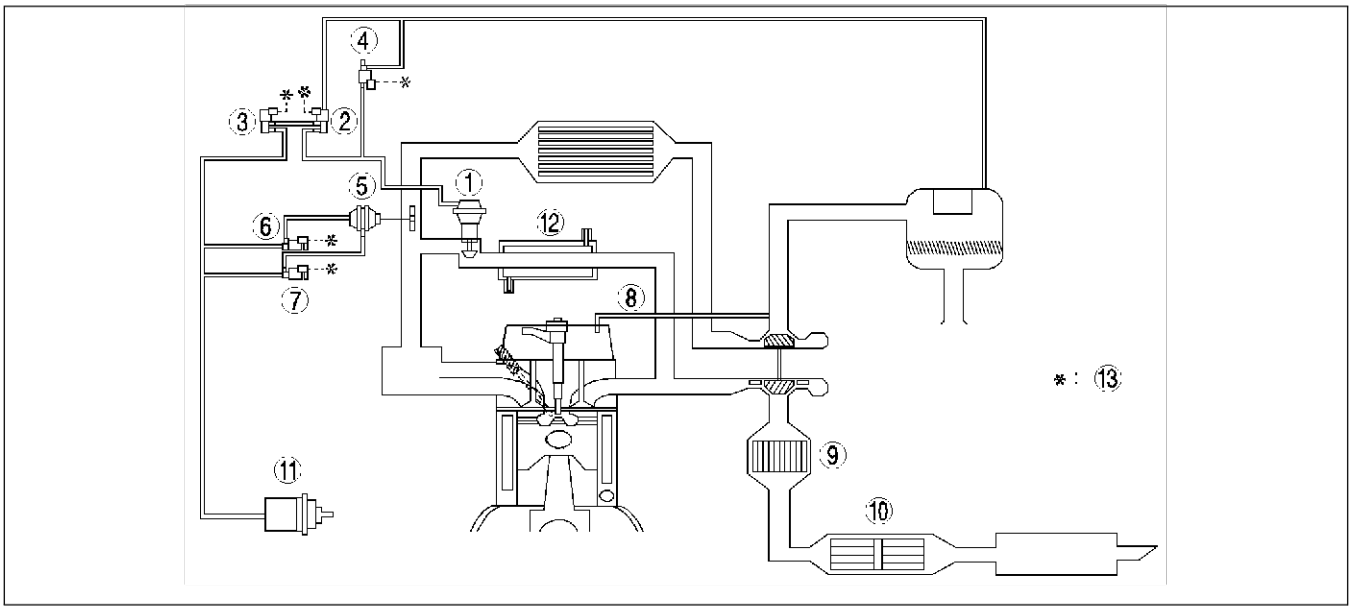

AME4312W028

1	EGR valve
2	EGR solenoid valve (vent)
3	EGR solenoid valve (vacuum)
4	EGR control solenoid valve
5	Intake shutter valve actuator
6	Intake shutter solenoid valve (half)
7	Intake shutter solenoid valve (full)

8	Blowby gas ventilation hose
9	Warm up oxidation catalytic converter
10	Oxidation catalytic converter
11	Vacuum pump
12	EGR water cooler
13	To PCM

F5

End Of Sub

WARM UP OXIDATION CATALYTIC CONVERTER DESCRIPTION

AME431601007W04

- The warm up oxidation catalytic converter capacity has been increased to **1,900 ml {1,900 cc, 116 cu in}** in order to improve emission performance.

End Of Sub

EGR WATER COOLER DESCRIPTION

AME431601075W02

Function

- The EGR water cooler cools recirculated exhaust gas from the intake manifold.

Structure/Operation

- The EGR water cooler has an EGR passage and coolant passage.

1	EGR water cooler
2	Coolant passage
3	EGR passage
4	Exhaust gas flow
5	Coolant flow
6	To intake manifold
7	From exhaust manifold

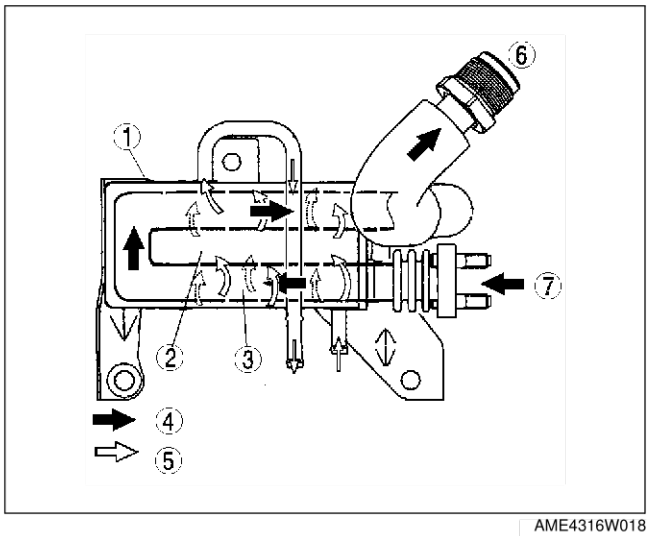

AME4316W018

End Of Sec

CONTROL SYSTEM

OUTLINE

AME434018881W01

- The control system is essentially carried over from that of the current 626 (GF)/626 Station Wagon (GW) RF Turbo engine models, except for the following features. (See 626 626 Station Wagon Workshop Manual Supplement 1688-1*-00G.)

Input Device

×:Applicable —: Not applicable

Item	New MPV (LW) MZR-CD (RF Turbo)	Current 626 (GF/GW) RF Turbo	Remark for new model
Battery	×		Same function as 626 (GF/GW) RF Turbo engine model
Starter (starter signal)	×		Same function as 626 (GF/GW) RF Turbo engine model
Clutch switch	×		Same function as 626 (GF/GW) RF Turbo engine model
Neutral switch	×		Same function as 626 (GF/GW) RF Turbo engine model
Idle switch	×		Same function as 626 (GF/GW) RF Turbo engine model
A/C switch	×		Same function as 626 (GF/GW) RF Turbo engine model
Refrigerant pressure switch	×		Same function as 626 (GF/GW) RF Turbo engine model
Accelerator position sensor	×		Same function as 626 (GF/GW) RF Turbo engine model
MAF/IAT sensor	×		Same function as 626 (GF/GW) RF Turbo engine model
IAT sensor No.2	×		Same function as B series (UN) WL engine model (Euro 3 regulation model)
ECT sensor	×		Same function as B series (UN) WL engine model (Euro 3 regulation model)
Fuel temperature sensor	×		Same function as ECT sensor of B series (UN) WL engine model (Euro 3 regulation model)
BARO sensor (integrated in PCM)	×		Same function as 626 (GF/GW) RF Turbo engine model
Boost sensor	×		Same function as 626 (GF/GW) RF Turbo engine model
Fuel pressure sensor	×	—	Newly adopted
CMP sensor	×	—	Newly adopted
CKP sensor	×		Same function as TDC sensor of 626 (GF/GW) RF Turbo engine model
VSS	×		Same function as 626 (GF/GW) RF Turbo engine model
Calibration resistor	×	—	Newly adopted
Immobilizer unit	×		Same function as 626 (GF/GW) RF Turbo engine model
TEN (DLC)	×		Same function as 626 (GF/GW) RF Turbo engine model

Output Device

×:Applicable —: Not applicable

Item	New MPV (LW) MZR-CD (RF Turbo)	Current 626 (GF/GW) RF Turbo	Remark for new model
Suction control valve	×	—	Newly adopted
IDM	×		Changed based on 626 (GF/GW) RF Turbo engine model
VSC solenoid valve	×		Same function as 626 (GF/GW) RF Turbo engine model
VBC solenoid valve	×		Same function as 626 (GF/GW) RF Turbo engine model
EGR control solenoid valve	×	—	Same function as B series (UN) WL engine model (Euro 3 regulation model)
EGR solenoid valve (vacuum)	×		Same function as 626 (GF/GW) RF Turbo engine model
EGR solenoid valve (vent)	×		Same function as 626 (GF/GW) RF Turbo engine model
Intake shutter solenoid valve (half)	×	—	Same function as Intake shutter solenoid valve of 626 (GF/GW) RF Turbo engine model
Intake shutter solenoid valve (full)	×	—	Same function as Intake shutter solenoid valve of 626 (GF/GW) RF Turbo engine model
Glow indicator light	×		Same function as 626 (GF/GW) RF Turbo engine model
Glow plug relay	×		Same function as 626 (GF/GW) RF Turbo engine model
Main fan relay	×		Same function as 626 (GF/GW) RF Turbo engine model
A/C relay	×		Same function as 626 (GF/GW) RF Turbo engine model
Fan control module	×	—	Newly adopted

Control System

×:Applicable —: Not applicable

Item	New MPV (LW) MZR-CD (RF Turbo)	Current 626 (GF/GW) RF Turbo	Remark for new model
Idle speed control	×		Same function as 626 (GF/GW) RF Turbo engine model
Glow control	×		Same function as 626 (GF/GW) RF Turbo engine model
VSC	×		Same function as 626 (GF/GW) RF Turbo engine model
Boost pressure control	×		Same function as 626 (GF/GW) RF Turbo engine model
Fuel injection amount control	×		Changed based on 626 (GF/GW) RF Turbo engine model
Fuel injection timing control	×		Changed based on 626 (GF/GW) RF Turbo engine model
Multiple fuel injection control	×	—	Newly adopted
Fuel pressure control	×	—	Newly adopted
EGR control	×		Changed based on 626 (GF/GW) RF Turbo engine model
Electrical fan control	×		Changed based on 626 (GF/GW) RF Turbo engine model
A/C cut-off control	×		Same function as 626 (GF/GW) RF Turbo engine model
Immobilizer system	×		Changed based on 626 (GF/GW) RF Turbo engine model

End Of Sub

STRUCTURAL VIEW

AME434018881W02

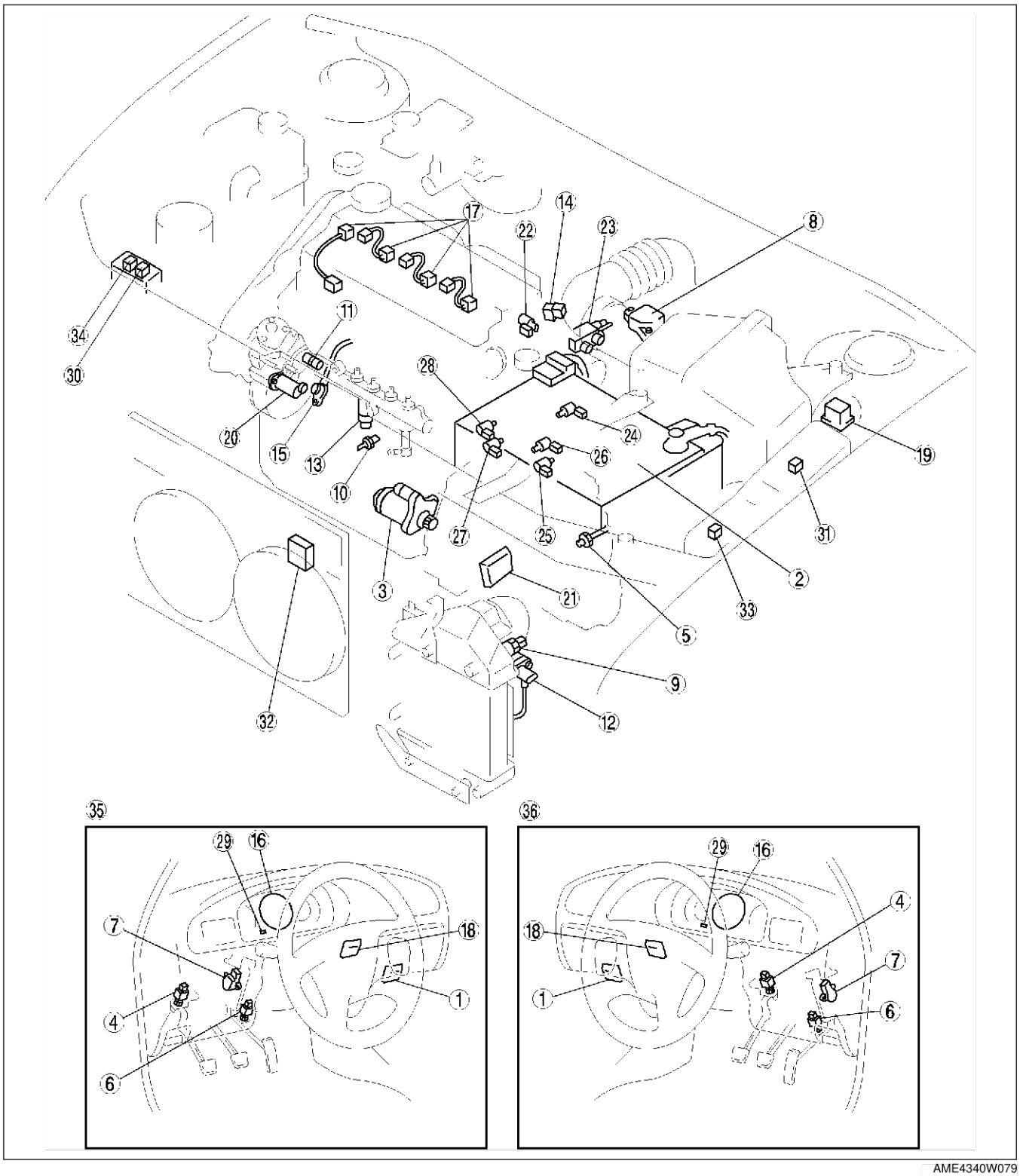

AME4340W079

1	PCM (With built-in BARO sensor)
2	Battery
3	Starter
4	Clutch switch
5	Neutral switch
6	Idle switch
7	Accelerator position sensor
8	MAF/IAT sensor
9	IAT sensor No.2
10	ECT sensor
11	Fuel temperature sensor
12	Boost sensor
13	Fuel pressure sensor
14	CMP sensor
15	CKP sensor
16	VSS
17	Calibration resistor
18	Immobilizer unit
19	DLC
20	Suction control valve
21	IDM
22	VSC solenoid valve
23	VBC solenoid valve
24	EGR control solenoid valve
25	EGR solenoid valve (vacuum)
26	EGR solenoid valve (vent)
27	Intake shutter solenoid valve (half)
28	Intake shutter solenoid valve (full)
29	Glow indicator light
30	Glow plug relay
31	Main fan relay
32	Fan control module
33	PCM control relay
34	A/C relay
35	L.H.D.
36	R.H.D.

End Of Sie

BLOCK DIAGRAM

AME434018881W03

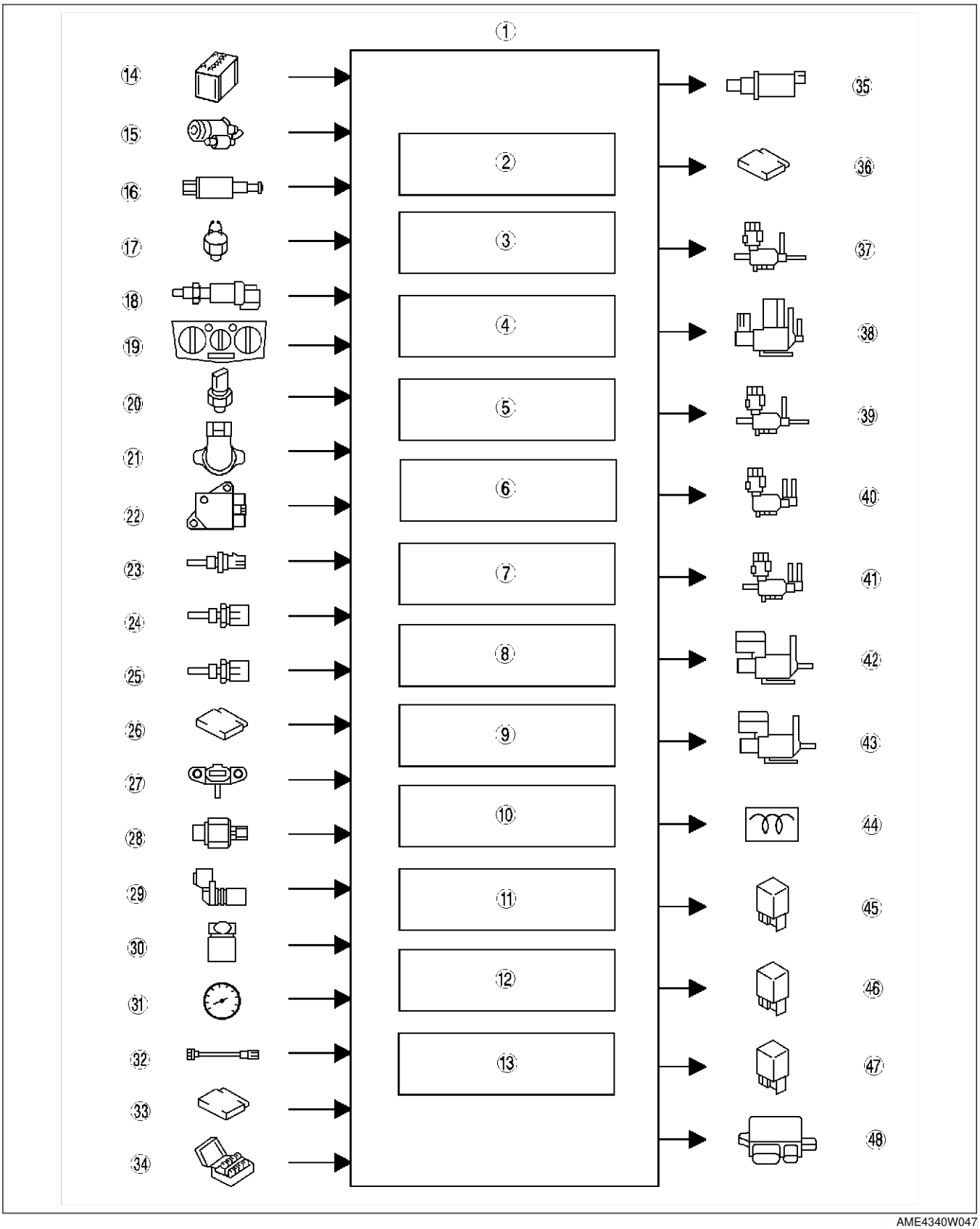

AME4340W047

1	PCM
2	Idle speed control
3	Glow control
4	VSC
5	Boost pressure control
6	Fuel injection amount control
7	Fuel injection timing control
8	Multiple fuel injection control
9	Fuel pressure control
10	EGR control
11	Electrical fan control
12	A/C cut-off control
13	Immobilizer system
14	Battery
15	Starter (starter signal)
16	Clutch switch
17	Neutral switch
18	Idle switch
19	A/C switch
20	Refrigerant pressure switch
21	Accelerator position sensor
22	MAF/IAT sensor
23	IAT sensor No.2
24	ECT sensor
25	Fuel temperature sensor
26	BARO sensor (integrated in PCM)
27	Boost sensor
28	Fuel pressure sensor
29	CMP sensor
30	CKP sensor
31	VSS
32	Calibration resistor
33	Immobilizer unit
34	TEN terminal (DLC)
35	Suction control valve
36	IDM
37	VSC solenoid valve
38	VBC solenoid valve
39	EGR control solenoid valve
40	EGR solenoid valve (vacuum)
41	EGR solenoid valve (vent)
42	Intake shutter solenoid valve (half)
43	Intake shutter solenoid valve (full)
44	Glow indicator light
45	Glow plug relay
46	Main fan relay
47	A/C relay
48	Fan control module

End Of Sie

CONTROL DEVICE AND CONTROL RELATIONSHIP CHART

AME434018881W04

×: Applicable

Item	Idle speed control	Glow control	VSC	Boost pressure control	Fuel injection amount control	Fuel injection timing control	Multiple fuel injection control	Fuel pressure control	EGR control	Electrical fan control	A/C cut-off control	Immobilizer system
Input device												
Battery				×						×		
Starter (starter signal)	×	×	×	×	×	×	×	×	×		×	
Clutch switch	×		×		×	×	×		×		×	
Neutral switch	×		×		×	×	×		×		×	
Idle switch	×		×		×	×	×		×		×	
A/C switch	×				×				×	×	×	
Refrigerant pressure switch	×				×				×	×	×	
Accelerator position sensor	×		×	×	×		×		×	×	×	
MAF/IAT sensor			×			×	×	×	×			
IAT sensor No.2					×		×					
ECT sensor	×	×	×		×	×	×	×	×	×	×	
Fuel temperature sensor							×					
BARO sensor (integrated in PCM)				×				×	×			
Boost sensor		×		×	×				×			
Fuel pressure sensor					×	×		×	×			
CMP sensor			×	×	×	×	×					
CKP sensor	×		×	×	×	×	×	×	×		×	
VSS	×	×	×		×	×	×		×			
Calibration resistor					×		×					
Immobilizer unit												×
TEN terminal (DLC)										×		
Output device												
Suction control valve								×				×
IDM	×				×	×	×					×
VSC solenoid valve			×									
VBC solenoid valve				×								
EGR control solenoid valve									×			
EGR solenoid valve (vacuum)									×			
EGR solenoid valve (vent)									×			
Intake shutter solenoid valve (half)									×			
Intake shutter solenoid valve (full)									×			
Glow indicator light		×										
Glow plug relay		×										
Main fan relay										×		
A/C relay											×	
Fan control module										×		

End Of Sie

PCM

AME434018881W05

Outline

- A 104-pin type PCM is used.

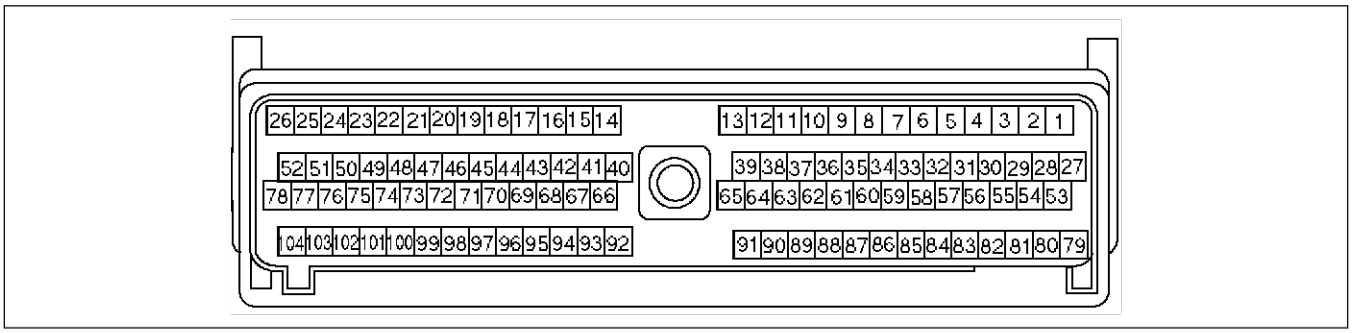

AME4340W013

End Of Sie

FUEL PRESSURE SENSOR

AME434013015W01

Function

- The fuel pressure sensor detects the fuel pressure in the common rail.
- The detected fuel pressure is used for fuel pressure control.

Structure

- The fuel pressure sensor is located on the common rail.
- The fuel pressure sensor uses the piezo-electrical effect.

F5

Operation

- The fuel pressure sensor converts the fuel pressure in the common rail into a voltage signal and outputs it to the PCM.

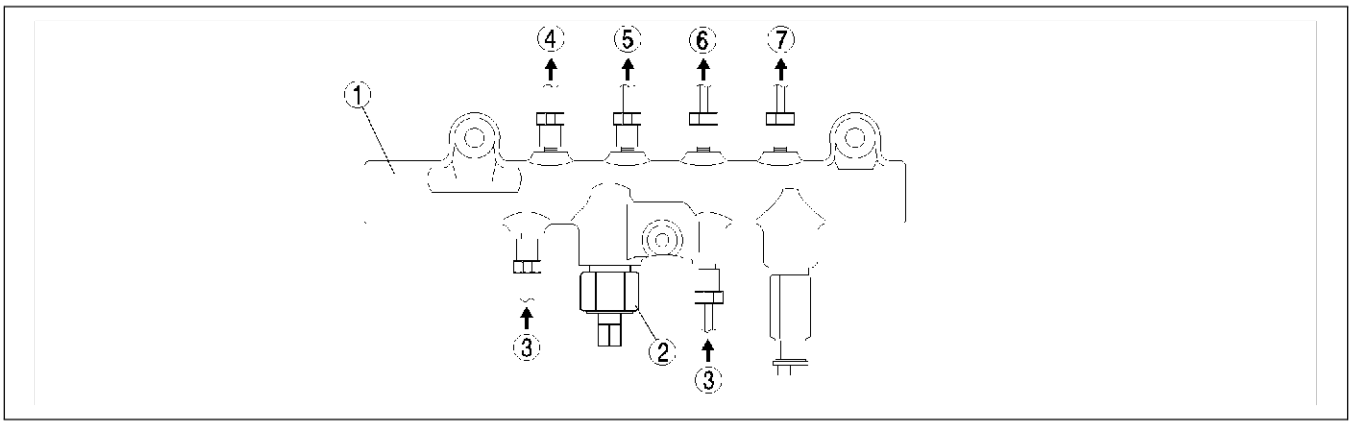

AME4340W026

1	Common rail
2	Fuel pressure sensor
3	From supply pump
4	To fuel injector No.1

5	To fuel injector No.2
6	To fuel injector No.3
7	To fuel injector No.4

End Of Sie

CAMSHAFT POSITION (CMP) SENSOR

AME434018200W03

Function

- The CMP sensor detects the top dead center of cylinder No.1 during the compression stroke.

Structure

- The CMP sensor is located on the upper part of the timing belt cover.
- The CMP sensor uses a buil-in magnet and coil.

Operation

- When the pulsar rotates, the magnetic flux that passes the coil increases/decreases and alternating voltage is generated.
- The pulsar attached to the camshaft has five projections on its side. Therefore, the CMP sensor detects five pulses of alternating voltage per one pulsar rotation (720° CA).
- As a set of two pulses out of the five pulses have a short interval, the PCM determines that cylinder No.1 is at top dead center of the compression stroke when the CMP sensor detects those two pulses, and determines the position of other cylinders accordingly.

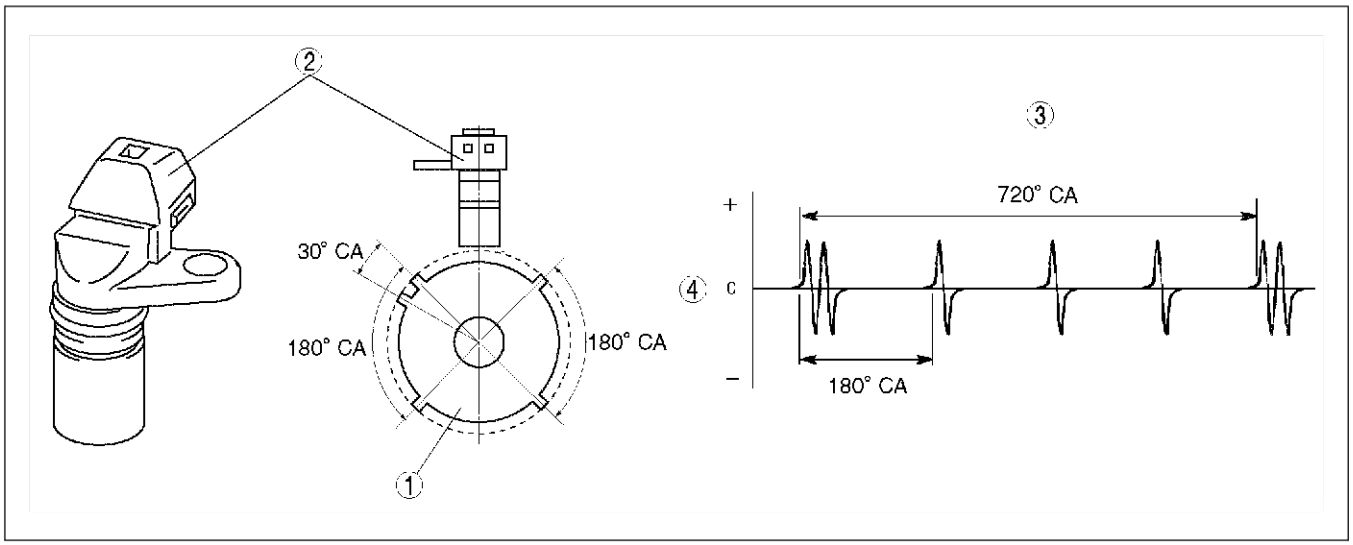

AME4340W014

1	Pulsar
2	CMP sensor

3	Output voltage characteristics
4	Output voltage (V)

End Of Sta

CRANKSHAFT POSITION (CKP) SENSOR

AME434018230W04

Function

- The CKP sensor detects the crank angle position.
- The detected crank angle position is used for injection timing control (calculation of the actual injection timing).

Structure

- The CKP sensor is located next to the crankshaft pulley in the timing belt cover.
- The CKP sensor uses a built-in magnet and coil.

Operation

- The pulsar has 23 teeth, missing one tooth in one location, and detects the pulsar rotating angle per 15° CA.
- When the pulsar rotates, the magnetic flux that passes the coil increases/decreases and alternating voltage is generated.
- The CKP sensor detects the pulse (alternating voltage) generated by the projection on the pulsar in the back of the crankshaft pulley and outputs this to the PCM as a crank angle standard position signal.
- The PCM detects the engine speed by counting the pulses.

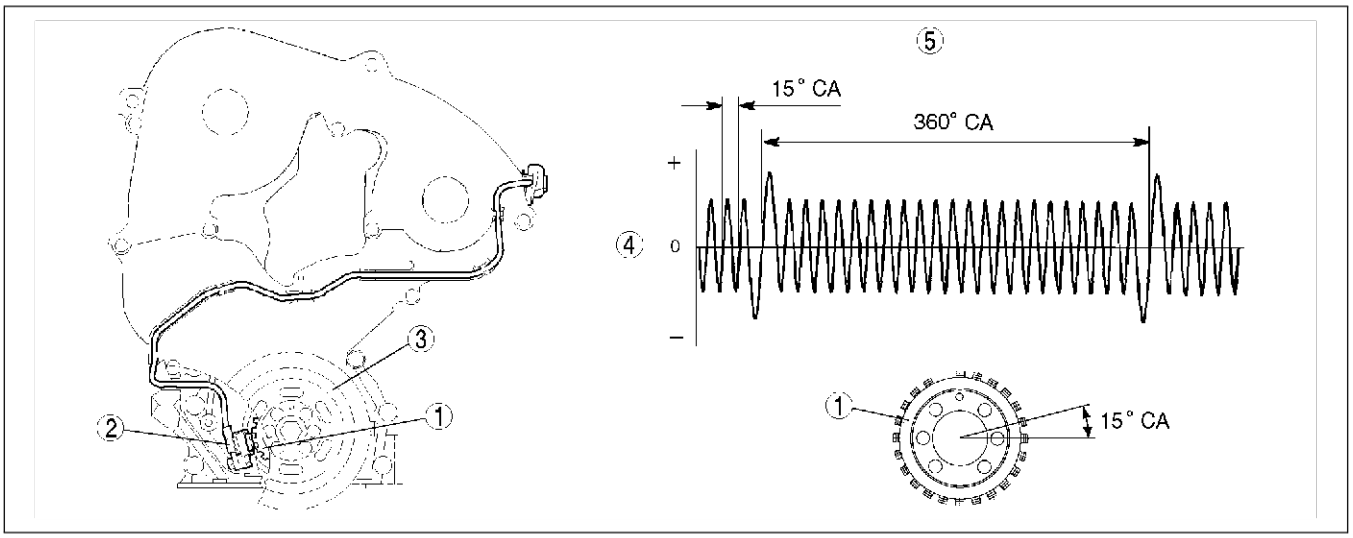

AME4340W012

1	Pulsar
2	CKP sensor
3	Crankshaft pulley

4	Output voltage (V)
5	Output voltage characteristics

End Of Sta

CALIBRATION RESISTOR

AME434013050W03

Function

- The calibration resistors convert the fuel injection amount deviations, which arise due to variations in mechanical properties of the fuel injectors, into resistance values.
- The resistance value is used for fuel injection timing control.

Structure

- The resistor is built into each calibration resistor of the fuel injectors.
- There are 25 types of calibration resistors according to fuel injection amount deviations.
- Fuel injectors and calibration resistors of the same rank are to be matched respectively as shown in the table below.

Reference table

Fuel injector rank number	Calibration resistor	
	Rank number	Resistance (ohm)
1	1	30.9
2	2	41.2
3	3	53.6
4	4	68.1
5	5	84.5
6	6	105
7	7	130
8	8	158
9	9	196
10	10	243
11	11	301
12	12	365

Fuel injector rank number	Calibration resistor	
	Rank number	Resistance (ohm)
13	13	442
14	14	549
15	15	665
16	16	825
17	17	1020
18	18	1240
19	19	1540
20	20	1920
21	21	2370
22	22	3010
23	23	4020
24	24	5760
25	25	9530

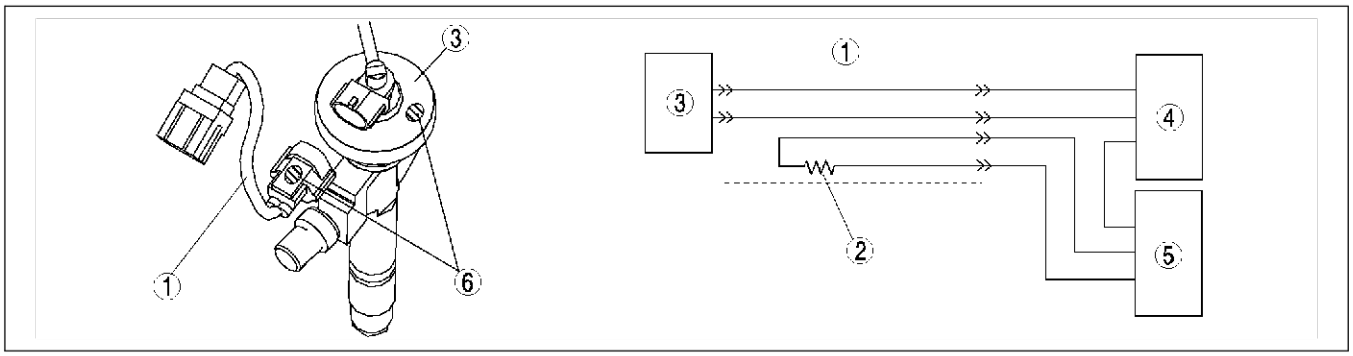

AME4340W089

1	Calibration resistor
2	Resistor
3	Fuel injector

4	IDM
5	PCM
6	Rank number

Operation

- Based on resistance values from each calibration resistor, the PCM calculates the correction amount for each fuel injector and determines the fuel injection periods.

End Of Sec

INJECTOR DRIVER MODULE (IDM)

AME434018701W03

Function

- The IDM drives the fuel injectors under high pressure at high speed using a high-voltage, high-speed activation system.
- The IDM controls high-accuracy fuel injection timing by driving the fuel injectors at high speed.

Structure

- The IDM uses a buit-in high voltage generator and control circuit.

Operation

- The IDM amplifies the battery positive voltage input from the PCM control relay into high voltage of more than approximately 50 V via the high voltage generating circuit, and outputs it to the fuel injectors as a fuel injector drive signal.

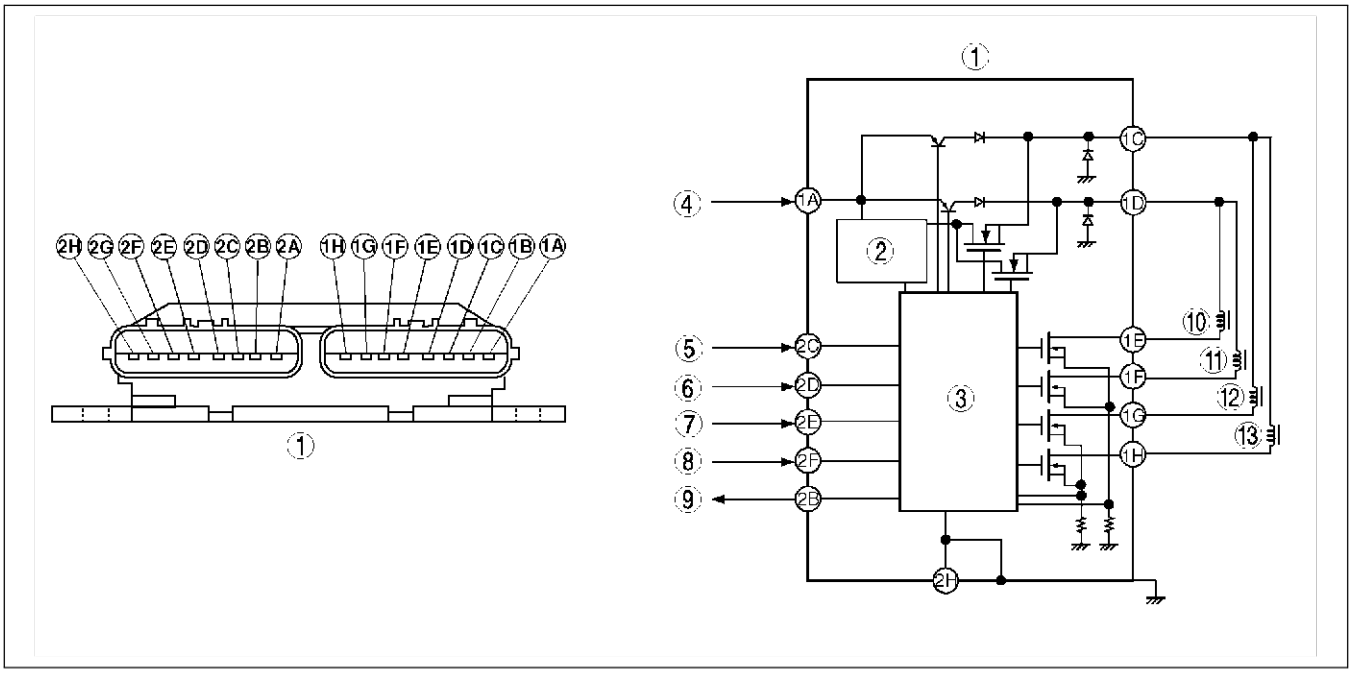

AME4340W020

1	IDM
2	High voltage generator
3	Control circuit
4	Battery positive voltage (from PCM control relay)
5	Injection signal No.1 (from PCM)
6	Injection signal No.4 (from PCM)
7	Injection signal No.2 (from PCM)

8	Injection signal No.3 (from PCM)
9	Injection confirmation signal (to PCM)
10	Fuel injector No.1
11	Fuel injector No.4
12	Fuel injector No.2
13	Fuel injector No.3

- When fuel injection signals are input from the PCM to the IDM, the IDM drives the fuel injectors at high voltage and starts injector operation for a short interval. When the fuel injectors start operating, the IDM maintains a constant current.
- While the fuel injectors are operating, the IDM detects the fuel injector drive current and outputs fuel injection confirmation signals (injector operating status) to the PCM.

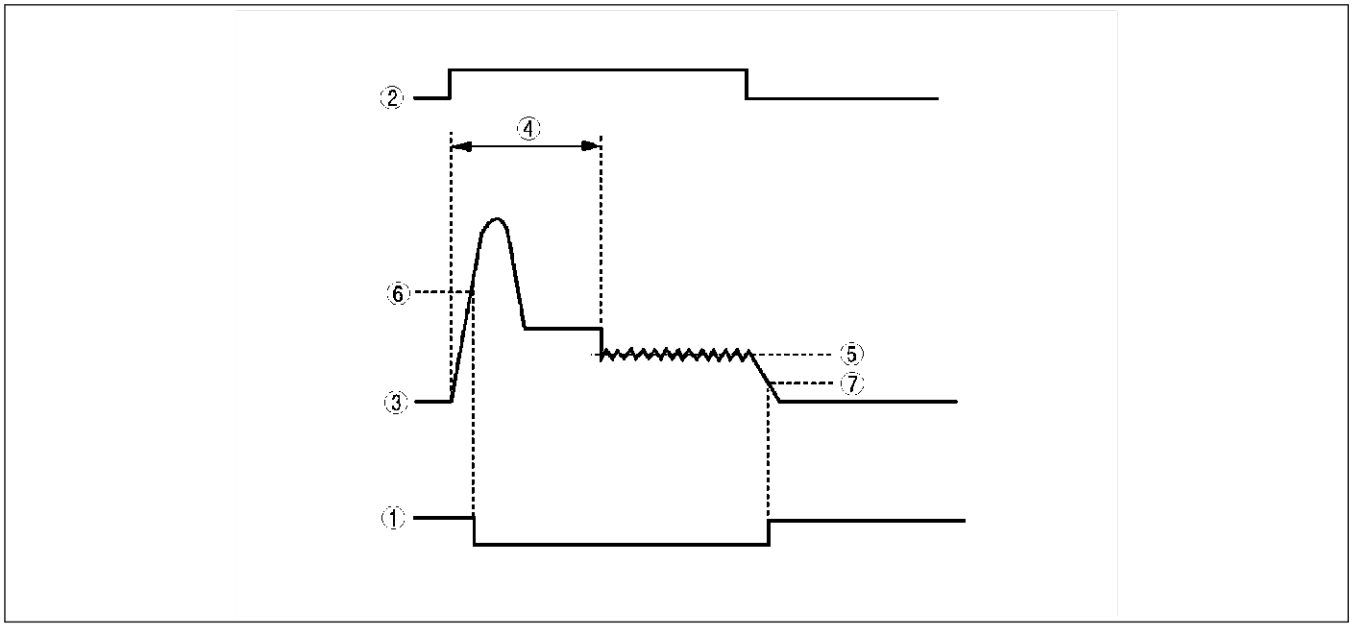

AME4340W021

1	Injection confirmation signal (to PCM)
2	Injection signal (from PCM)
3	Fuel injector drive current
4	Holding current switching time

5	Holding current control value
6	Fail signal (High side)
7	Fail signal (Low side)

End Of Sec

IDLE SPEED CONTROL

AME434018881W12

Outline

- The idle speed control is essentially carried over from that of the current 626 (GF)/626 Station Wagon (GW) RF Turbo engine models, except for the following.
  - — Due to the elimination of the pump speed sensor, the PCM detects the engine speed signal from the CKP sensor.
  - — Due to the elimination of the spill valve, the PCM controls fuel injection amount to activate the fuel injectors.

Block Diagram

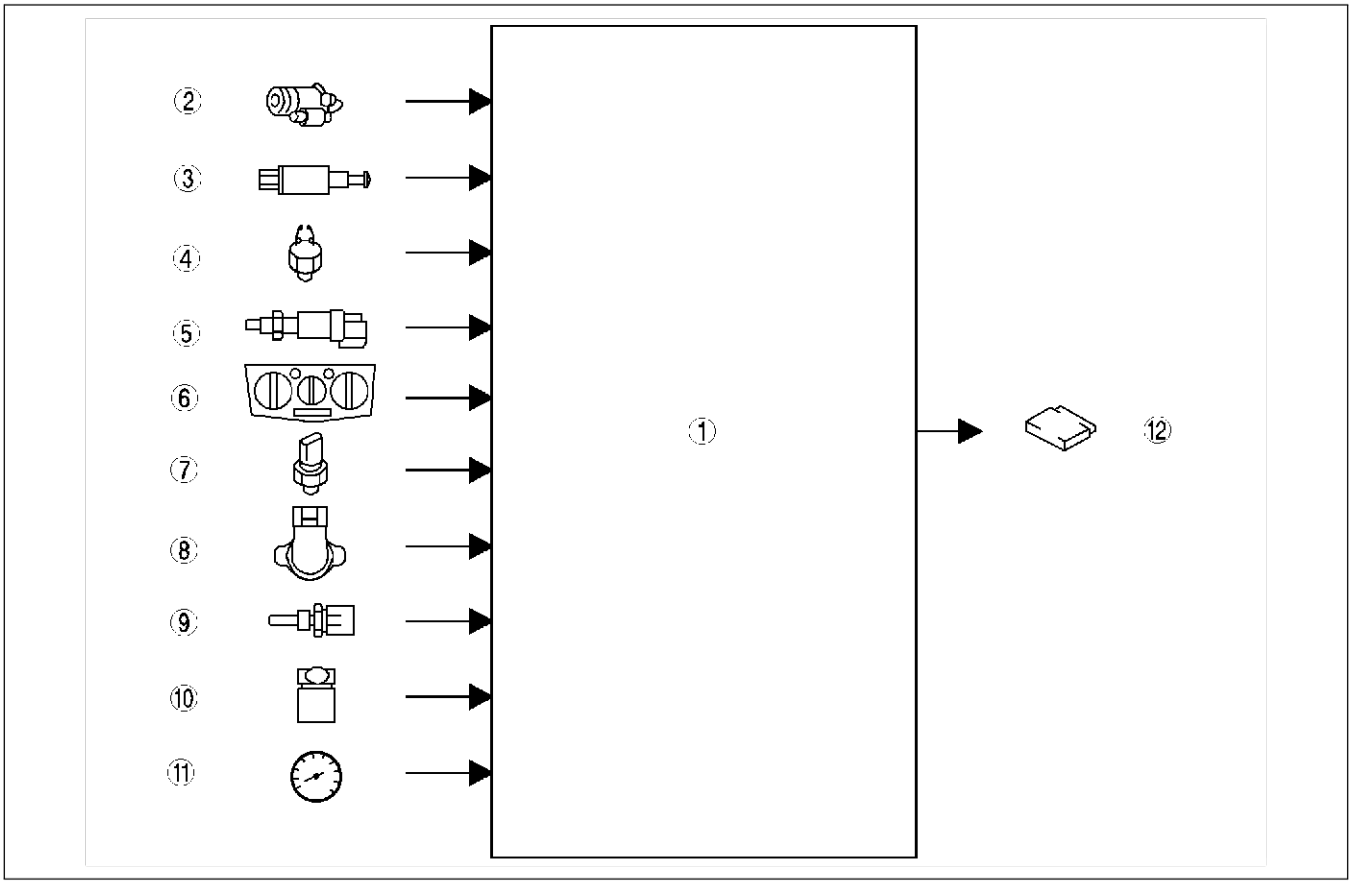

AME4340W049

1	PCM
2	Starter (starter signal)
3	Clutch switch
4	Neutral switch
5	Idle switch
6	A/C switch

7	Refrigerant pressure switch
8	Accelerator position sensor
9	ECT sensor
10	CKP sensor
11	VSS
12	IDM

End Of Sie

GLOW CONTROL

AME434018881W13

Outline

- The glow control is essentially carried over from that of the current 626 (GF)/626 Station Wagon (GW) RF Turbo engine models, except for the following.
  - — When a malfunction occurs, the MIL illuminates as a warning and the glow indicator light does not illuminate.

End Of Sie

VARIABLE SWIRL CONTROL (VSC)

AME434018881W16

Outline

- The VSC is essentially carried over from that of the current 626 (GF)/626 Station Wagon (GW) RF Turbo engine models, except for the following.
  — Due to the elimination of the pump speed sensor, the PCM detects the engine speed signal from the CKP sensor.

Block Diagram

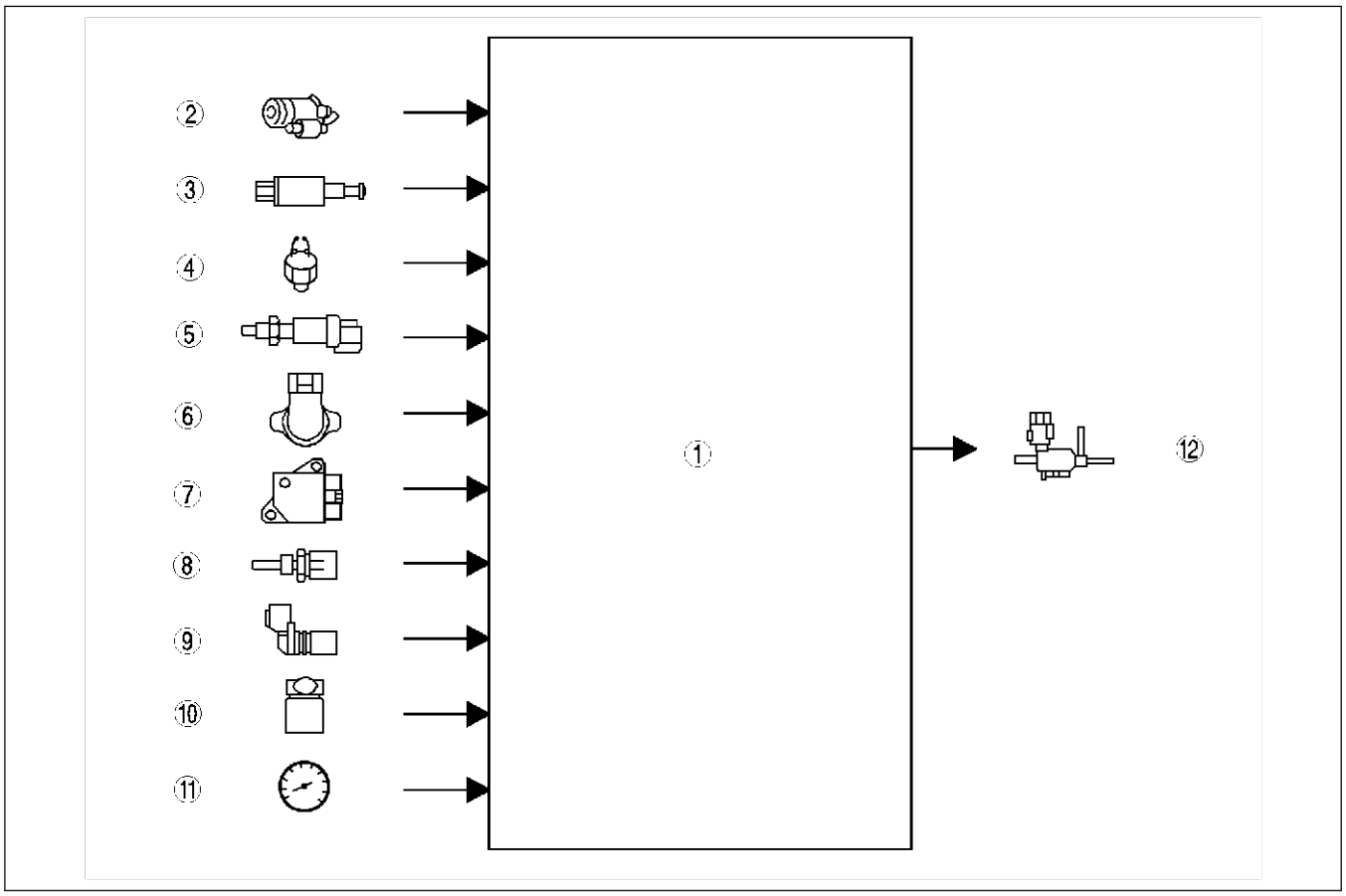

AME4340W050

1	PCM
2	Starter (starter signal)
3	Clutch switch
4	Neutral switch
5	Idle switch
6	Accelerator position sensor

7	MAF/IAT sensor
8	ECT sensor
9	CMP sensor
10	CKP sensor
11	VSS
12	VSC solenoid valve

End Of Sie

BOOST PRESSURE CONTROL

AME434018881W15

Outline

- The boost pressure control is essentially carried over from that of the current 626 (GF)/626 Station Wagon (GW) RF Turbo engine models, except for the following.
  — Due to the elimination of the pump speed sensor, the PCM detects the engine speed signal from the CKP sensor.

Block Diagram

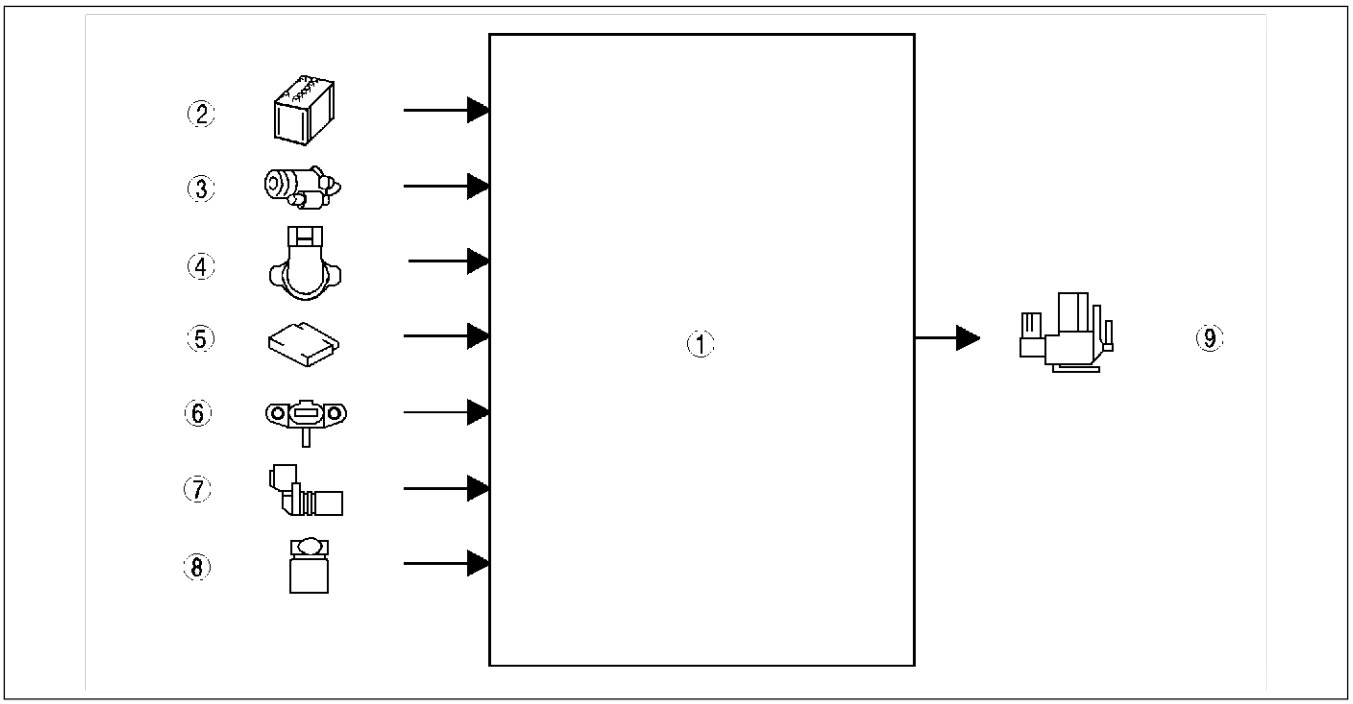

AME4340W051

1	PCM
2	Battery
3	Starter (starter signal)
4	Accelerator position sensor
5	BARO sensor (integrated in PCM)

6	Boost sensor
7	CMP sensor
8	CKP sensor
9	VBC solenoid valve

End Of Sie

FUEL INJECTION AMOUNT CONTROL

AME434018881W09

Outline

- The fuel injection amount is controlled by opening the injection nozzle according to the signal from the PCM through the IDM.
- The PCM conducts learning and correction the dispersion of the fuel injection amount in each cylinder. Due to this, engine noise is reduced and emission performance is improved.

Block Diagram

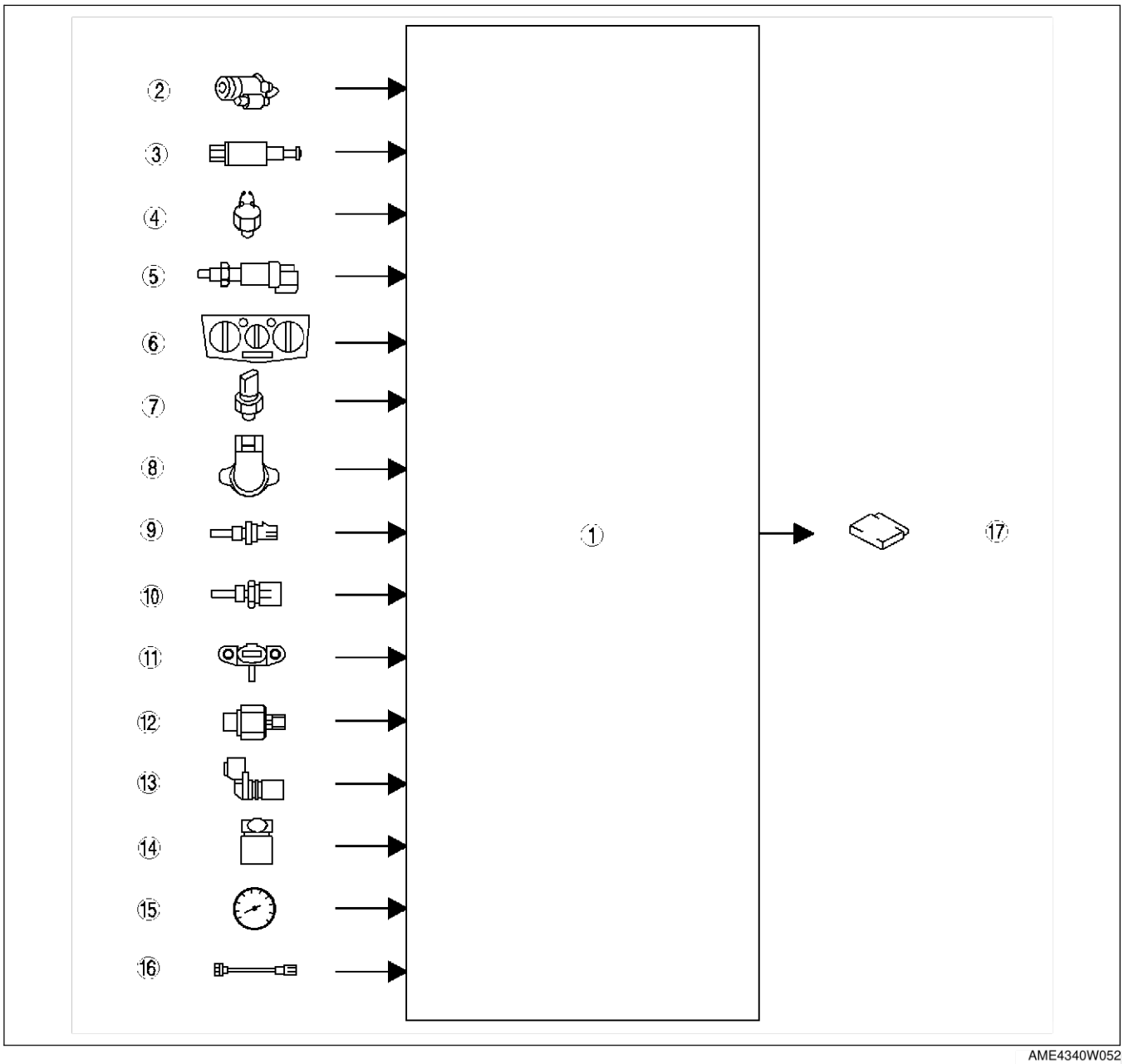

AME4340W052

1	PCM
2	Starter (starter signal)
3	Clutch switch
4	Neutral switch
5	Idle switch
6	A/C switch
7	Refrigerant pressure switch
8	Accelerator position sensor
9	IAT sensor No.2

10	ECT sensor
11	Boost sensor
12	Fuel pressure sensor
13	CMP sensor
14	CKP sensor
15	VSS
16	Calibration resistor
17	IDM

Operation
- The fuel injection amount is controlled in accordance with the length of the injection pulse.

Injection Amount Calculation
- The PCM calculates the optimal injection amount according to the engine driving condition. The following two injection amount are calculated.
- The values of the two amounts below are compared, and the lesser amount is selected as the final injection amount.

Basic injection amount
- The theoretical necessary injection amount is calculated based on the accelerator opening angle and the engine speed.

Maximum injection amount
- The maximum injection amount is calculated by adding the corrections based on intake air pressure and intake air temperature to the basic injection amount.

Injection Amount Learning
- To confirm the dispersion of the fuel injection amount, the PCM calculates the change in engine speed.
- Based on the change in engine speed, the PCM confirms the fuel injection amount in each cylinder and increases or decreases that amount in order to smooth engine operation. The amount of increase or decrease is stored as the learning factor and used to correct the fuel injection amount. Due to this, the dispersion of the fuel injection amount is resolved.
- The PCM stores the learning factor until the next time the factor is updated.
- Injection amount learning is performed at the following three pressure levels in the common rail.

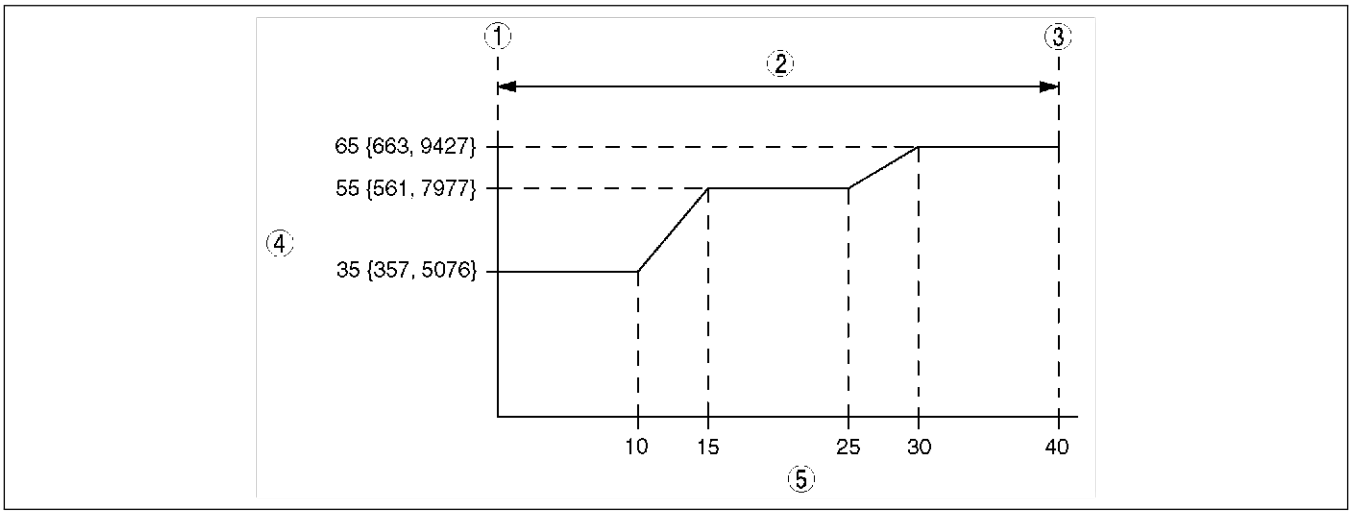

AME4340W084

1	Learning start
2	One time period of learning
3	Learning completion

4	Common rail pressure (MPa {kgf/cm^2, psi})
5	Time (seconds)

- When ecarrying out injection amount learning, slight changes in engine sound are normal.

Automatic learning
- The PCM carries out injection amount learning every 1,500 km within the first 6,000 km of driving and every 10,000 km after that, when the following conditions are satisfied at idle:
  - — Gear is in neutral position.
  - — Vehicle speed is 0 km/h {0 mph}.
  - — Engine coolant temperature is 65°C {104°F} or above.
  - — A/C is not operating.
- Three learning cycles occur during automatic learning.
- If any of these conditions change while carrying out injection amount learning, the process will be suspended. It will continue when the conditions are once again satisfied.
- Due to the priority ranking of the learning function, injection amount learning is given a lower priority than MAF learning. If both injection amount and MAF learning can occur at the same time, MAF learning will be performed first, followed by injection amount learning.

Using the WDS or equivalent for learning

- By using the WDS or equivalent, the learning function can be freely controlled. Due to this, even if the PCM or fuel injector is replaced, the learning factor can be stored again.
- Three learning cycles occur during periodic inspection and four learning cycles after replacing fuel injectors.

End Of Sie

FUEL INJECTION TIMING CONTROL

AME434018881W10

Outline

- The PCM detects the engine condition according to each signal and calculates the optimum injection timing to control the injection timing.

Block Diagram

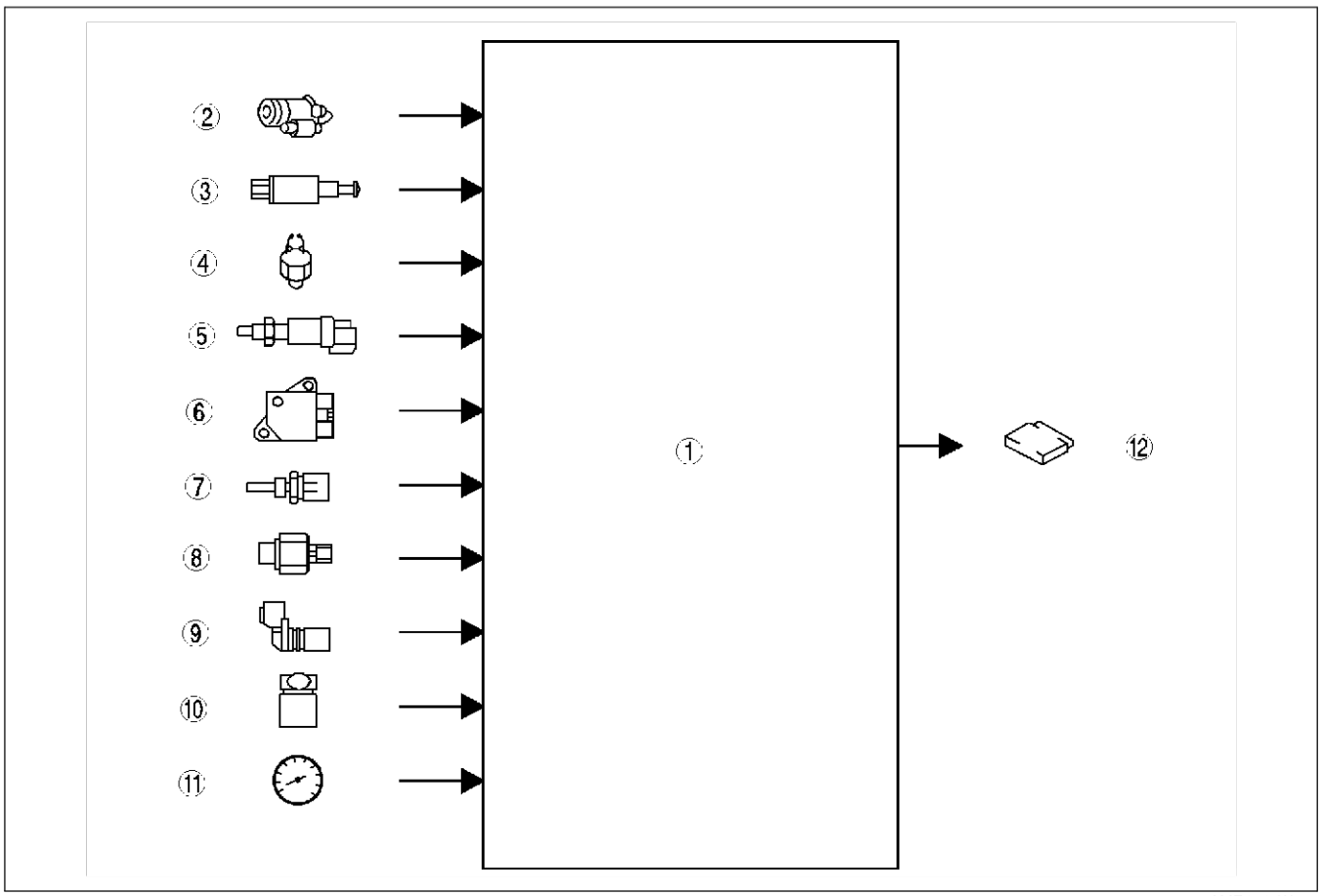

AME4340W053

1	PCM
2	Starter (starter signal)
3	Clutch switch
4	Neutral switch
5	Idle switch
6	MAF/IAT sensor

7	ECT sensor
8	Fuel pressure sensor
9	CMP sensor
10	CKP sensor
11	VSS
12	IDM

Operation

- The fuel injection timing is controlled in accordance with the position of the injection pulse.
- The fuel injection start timing is determined by the crank angle standard position signal and fuel injection amount.

Fuel injection start timing

105°CA - (main fuel injection timing + interval + response delay correction + pilot fuel injection time)

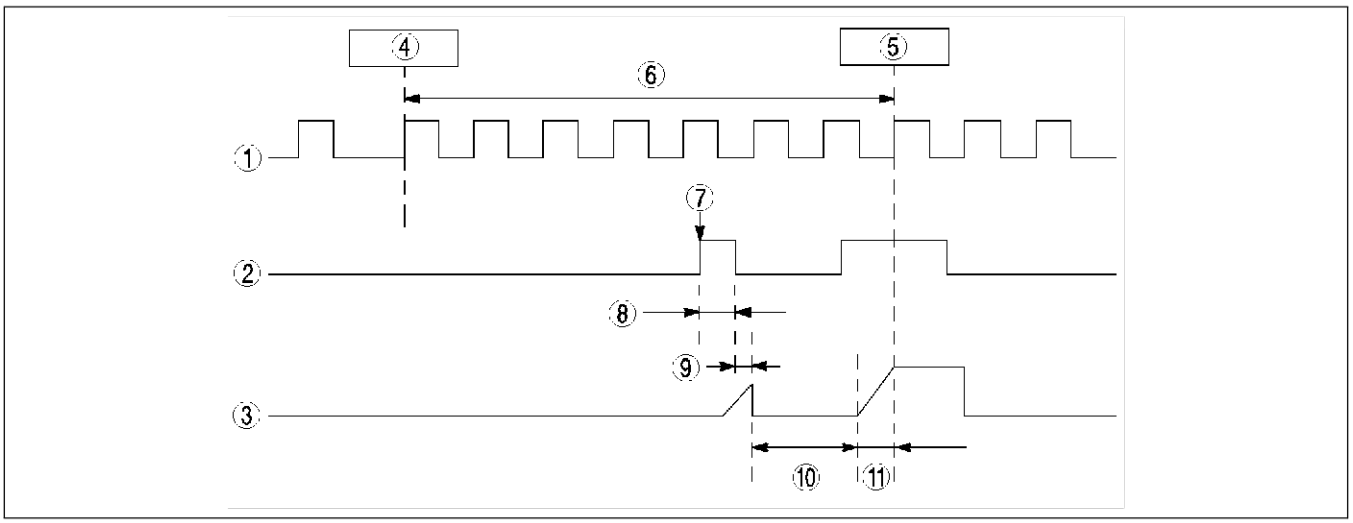

AME4340W061

1	CKP sensor signal
2	Injector operation
3	Injector lift
4	Crank angle standard position
5	TDC
6	105°CA

7	Fuel injection start timing
8	Pilot fuel injection time
9	Response delay correction
10	Interval
11	Main fuel injection timing

Injection Timing Calculation

- Based on the basic target injection timing and according to the signals from each sensor, the PCM calculates the optimal injection timing for the driving condition.

Target injection timing

- The target injection timing is calculated based on the engine speed and the fuel injection amount.

Injection timing correction

- The injection timing is corrected based on the intake air pressure, the engine coolant temperature, and the atmospheric pressure.

End Of Sie

MULTIPLE FUEL INJECTION CONTROL

AME434018881W21

Outline

- To reduce noise and NOx, the PCM injects fuel multiple times, according to vehicle conditions, before and after the main injection.

Block Diagram

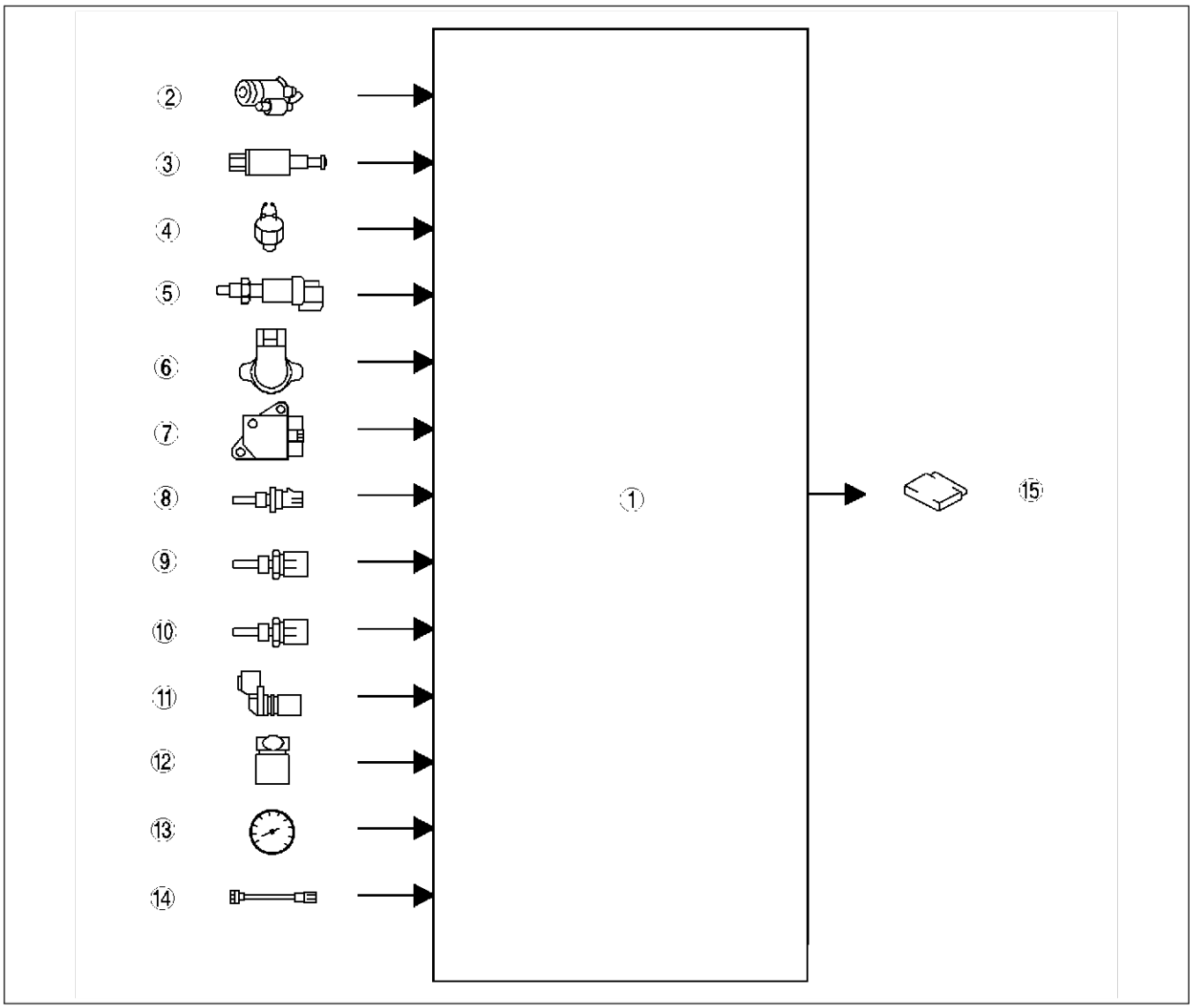

AME4340W054

1	PCM
2	Starter (starter signal)
3	Clutch switch
4	Neutral switch
5	Idle switch
6	Accelerator position sensor
7	MAF/IAT sensor
8	IAT sensor No.2

9	ECT sensor
10	Fuel temperature sensor
11	CMP sensor
12	CKP sensor
13	VSS
14	Calibration resistor
15	IDM

Function

- With a single injection frequency, the fuel injection amount increases in the period from injection to ignition according to the ignition lag. Due to this, the fuel is burned quickly at high temperature and high pressure, and as a result, noise and NOx are increased.
- In order to prevent this, the PCM injects fuel multiple times. Due to this, combustion is slowed and the rate of heat release is reduced.

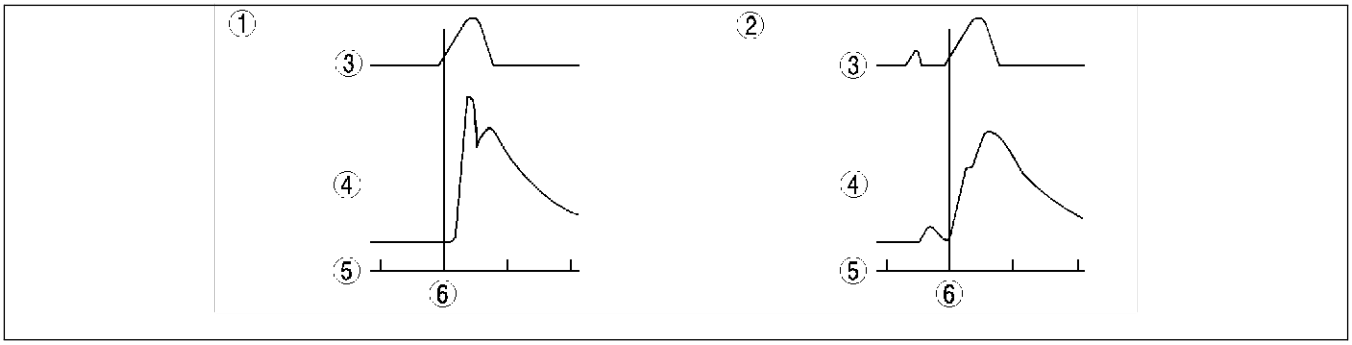

AME4340W087

1	Single injection
2	Multiple injection
3	Injection pattern

4	Rate of heat release
5	Crank angle
6	TDC

Operation

- The multiple fuel injection control has five injection patterns with varying injection frequencies. The PCM selects the optimum injection pattern according to vehicle conditions and performs injection a maximum of five times.
- The main injection is injected in order to secure engine performance.
- The pre-injection is injected in order to improve emission performance.
- The pilot injection is injected in order to reduce noise.
- The follow-up injection is injected in order to improve emission performance.

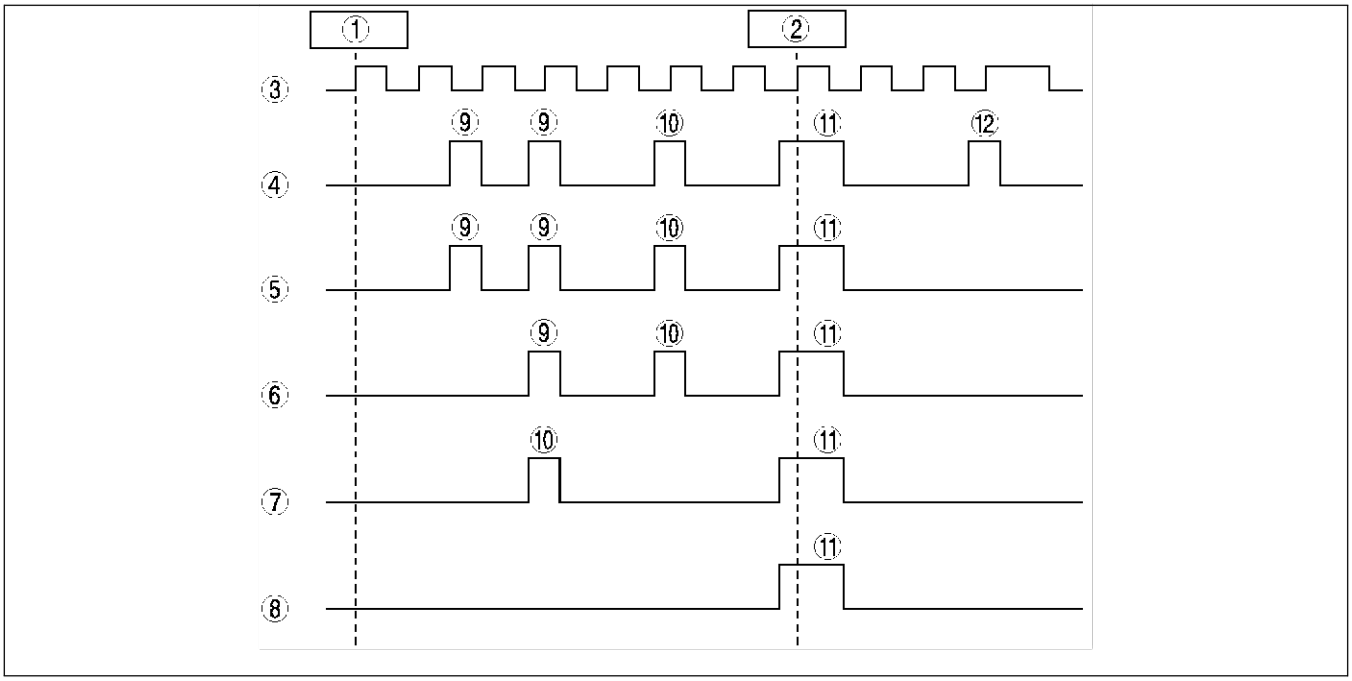

AME4340W086

1	Crank angle standard position
2	TDC
3	CKP sensor signal
4	Injection pattern for five injections
5	Injection pattern for four injections
6	Injection pattern for three injections

7	Injection pattern for two injections
8	Injection pattern for one injection
9	Pilot injection
10	Pre-injection
11	Main injection
12	Follow-up injection

Operating Condition

- The PCM determines the injection frequency based on the engine speed, fuel injection amount, and signals from each sensor.
- When the engine is started, the PCM calculates the injection frequency based on the engine coolant temperature and engine speed.

End Of Sie

FUEL PRESSURE CONTROL

AME434018881W11

Outline

- To obtain the optimum fuel injection pressure according to vehicle operating conditions, the PCM maintains engine feedback operation control over fuel pressure in the common rail.
- Because fuel injection pressure can be controlled irrespective of engine speed and load, the fuel can be injected at high pressure in the low engine speed range. Due to this, the amount of NOx and particulates has been reduced.

Block Diagram

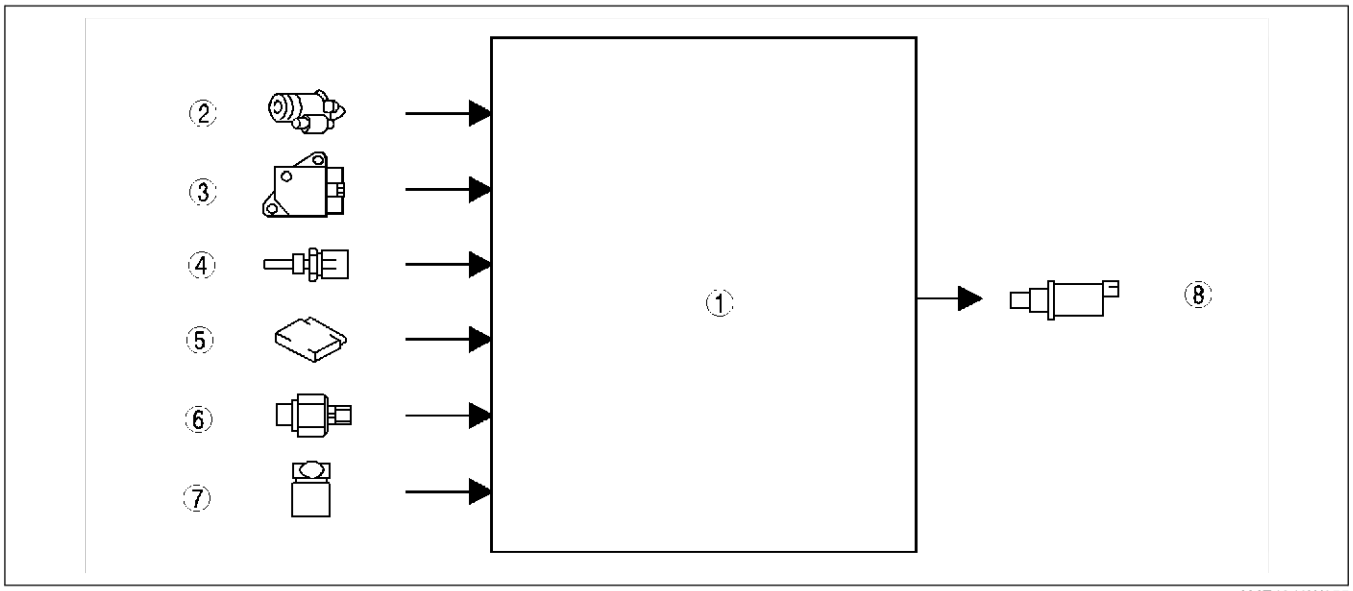

AME4340W055

1	PCM
2	Starter (starter signal)
3	MAF/IAT sensor
4	ECT sensor

5	BARO sensor (integrated in PCM)
6	Fuel pressure sensor
7	CKP sensor
8	Suction control valve

Operation

- The PCM calculates the target fuel pressure based on the engine speed and the fuel injection amount.
- To obtain the target fuel pressure in the common rail, the PCM drives the suction control valve in the supply pump using a duty signal.
- Optimum fuel injection pressure is constantly assured by the control of the fuel pressure feed from the supply pump to the common rail and control of fuel pressure within the common rail.

End Of Sie

EGR CONTROL

AME434018881W14

Outline

- The PCM controls two duty-cycle type solenoid valves and an ON/OFF type solenoid valve to control the EGR valve in order to obtain the optimum EGR amount for the actual engine operating condition. Due to this, emission performance and drivability has been improved.
- When introducing the exhaust gas during low engine speed, the PCM controls the intake shutter solenoid valve (half) to control the intake shutter valve opening angle. Thus the exhaust gas is channelled into the combustion chamber efficiently. Due to this, emission performance and drivability has been improved.
- As the MAF sensor deteriorates and an error margin is created between the target and the actual intake air amount, the PCM conducts learning and correction.

Block Diagram

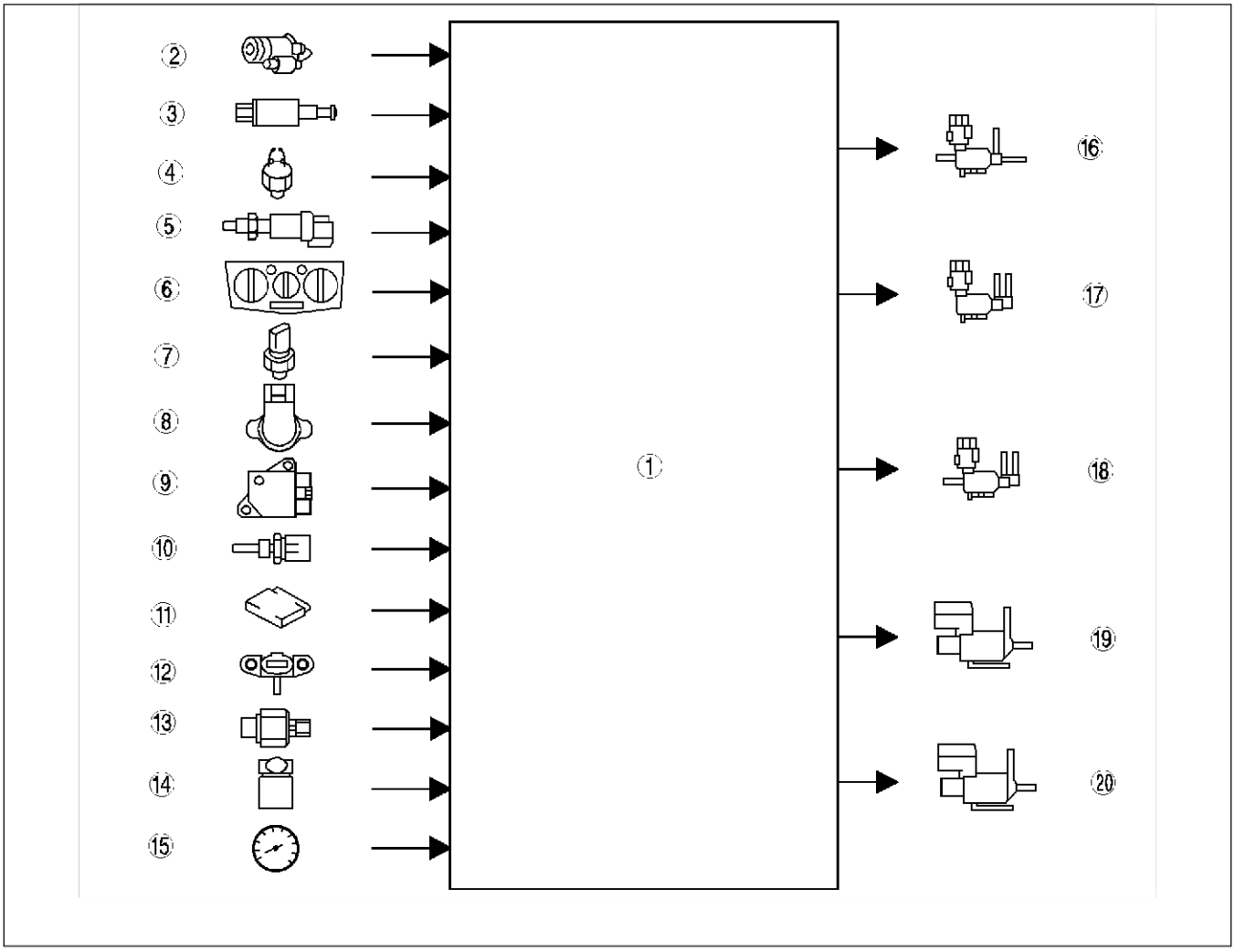

AME4340W056

1	PCM
2	Starter (starter signal)
3	Clutch switch
4	Neutral switch
5	Idle switch
6	A/C switch
7	Refrigerant pressure switch
8	Accelerator position sensor
9	MAF/IAT sensor
10	ECT sensor

11	BARO sensor (integrated in PCM)
12	Boost sensor
13	Fuel pressure sensor
14	CKP sensor
15	VSS
16	EGR control solenoid valve
17	EGR solenoid valve (vacuum)
18	EGR solenoid valve (vent)
19	Intake shutter solenoid valve (half)
20	Intake shutter solenoid valve (full)

EGR Valve Operation
- To improve emission performance, target EGR valve position is decided based on intake air flow, engine speed and engine coolant temperature.
- The flow amount of the EGR is calculated from the difference between the following amounts.
  — Target intake air amount that is mainly calculated from engine speed and fuel injection amount
  — Actual intake air amount that is mainly detected by MAF/IAT sensor
- The PCM controls the vacuum applied to the EGR valve by opening and closing a two-duty solenoid valve.

Intake Shutter Valve Operation
Close condition
- The PCM turns on the intake shutter solenoid valve (half) and the intake shutter solenoid valve (full) in order to close the intake shutter valve when the engine switch is at OFF.

Halfway open condition
- The PCM turns the intake shutter solenoid valve (half) on when all of the following conditions are met.
  — Engine coolant temperature is above threshold level.
  — Intake air temperature is threshold level.
  — Barometric pressure is above threshold level.
  — Engine speed is below threshold level.
  — Vehicle speed is below threshold level.

Full open condition
- For conditions other than closed and halfway open, the PCM turns off the intake shutter solenoid valve (half) and the intake shutter solenoid valve (full) in order to open the intake shutter valve.

MAF Learning
- After learning is initiated, the PCM calculates the actual intake air amount for the complete learning period.
- The PCM calculates the deviation between the target and actual intake air amount, then, based on the deviation, derives the learning factor. The PCM stores the learning factor and uses it to correct the intake air amount. Due to this, the error margin of the MAF sensor is resolved. If the deviation factor is less than the specified amount, the PCM does not calculate nor update the learning factor.
- The PCM stores the learning factor until the next time the factor is updated. However, if the negative battery cable is disconnected, the factor is erased.

Automatic learning
- The PCM carries out MAF learning every 1,500 km within the first 6,000 km of driving and every 10,000 km after that, when the following conditions are satisfied at idle:
  — Gear is in neutral position.
  — Vehicle speed is 0 km/h {0 mph}.
  — Engine coolant temperature is 65°C {104°F} or above.
  — A/C is not operating.
- If any of these conditions change while carrying out MAF learning, the process will be suspended. It will continue when the conditions are once again satisfied.
- Due to the priority ranking of the learning function, MAF learning is given a higher priority than injection amount learning. If both MAF and injection amount learning can occur at the same time, MAF learning will be performed first, followed by injection amount learning.

Using the WDS or equivalent for learning
- By using the WDS or equivalent, the learning function can be freely controlled. Due to this, even if the PCM or MAF/IAT sensor is replaced, the learning factor can be stored again.
- When using the WDS to control the MAF learning function, learning is performed at the following three engine speed levels.
  — 775 rpm
  — 1,100 rpm
  — 1,500 rpm

End Of Sie

ELECTRICAL FAN CONTROL

AME434018881W17

Outline

- The PCM controls the fan control module via duty value according to vehicle operating conditions for improved engine reliability and idle stability.

Block Diagram

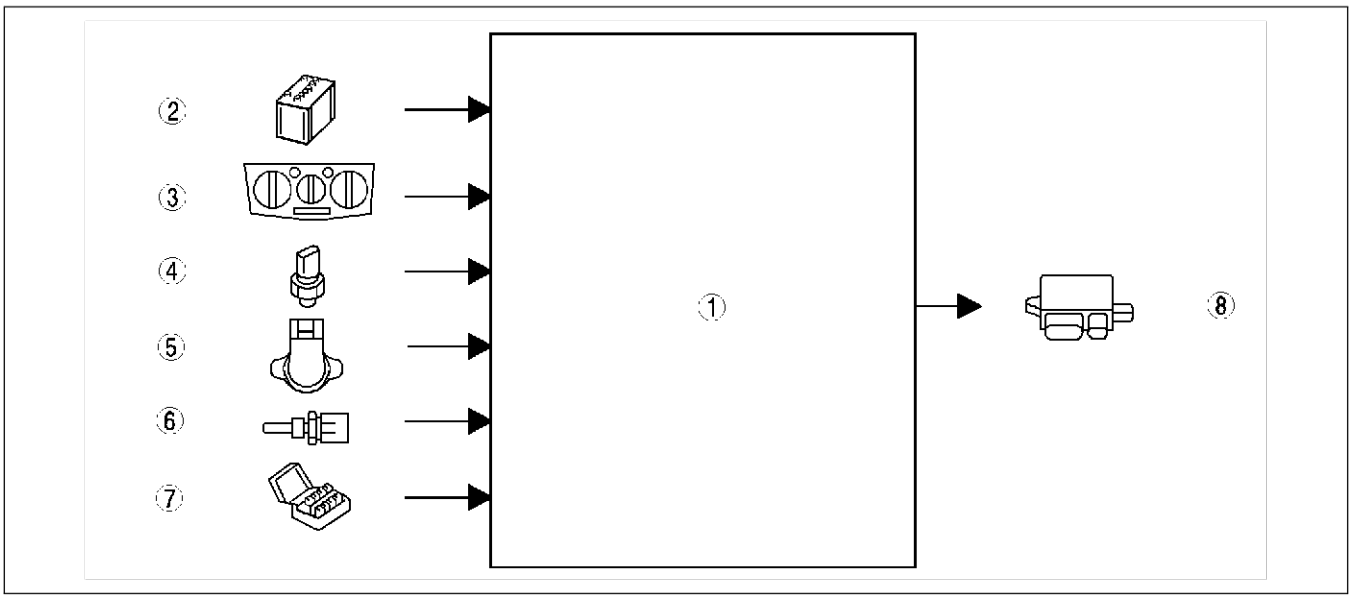

AME4340W057

1	PCM
2	Battery
3	A/C switch
4	Refrigerant pressure switch

5	Accelerator position sensor
6	ECT sensor
7	TEN terminal (DLC)
8	Fan control module

Operation

Normal condition

- When the engine coolant temperature is less than TW1, the duty ratio output from the PCM is 0%, causing the duty ratio output from the fan control module to also be 0% and the main fan is stopped.
- When the engine coolant temperature goes above TW1, the duty ratio varies within LO and HI2 in relation to the engine coolant temperature and the main fan operates accordingly.
- When the engine coolant temperature reaches approx. TW3, the duty ratio is maintained at HI2 until the engine coolant temperature goes above approx. TW4.
- When the engine coolant temperature goes above TW4, the duty ratio is MAX and the main fan operates at maximum speed.

A/C is on condition

- When the A/C switch is on, the duty ratio is maintained at HI1 until the engine coolant temperature goes above approx. TW2.
- When the engine coolant temperature goes above TW2, the duty ratio varies in relation to the engine coolant temperature.
- When the A/C switch and refrigerant pressure switch (middle) are on, regardless of the engine coolant temperature, the duty ratio output from the PCM is MAX, and the main fan operates at maximum speed.

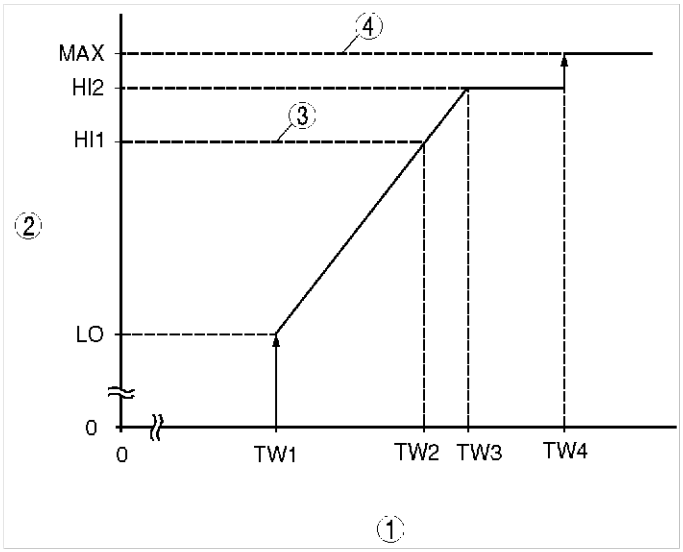

AME4340W046

1	Engine coolant temperature (°C {°F})
2	PCM output duty signal (%)

3	A/C switch is on
4	A/C switch and refrigerant pressure switch (middle) are on

Battery Voltage Correction

- To prevent variation of main fan speed due to battery voltage fluctuation, the PCM adjusts the duty ratio and corrects the battery voltage to maintain the main fan at a constant speed and stabilize cooling efficiency.

End Of Ste

A/C CUT-OFF CONTROL

AME434018881W18

Outline

- The A/C cut-off control is essentially carried over from that of the current 626 (GF)/626 Station Wagon (GW) RF Turbo engine models, except for the following.
  — Due to the elimination of the pump speed sensor, the PCM detects the engine speed signal from the CKP sensor.

Block Diagram

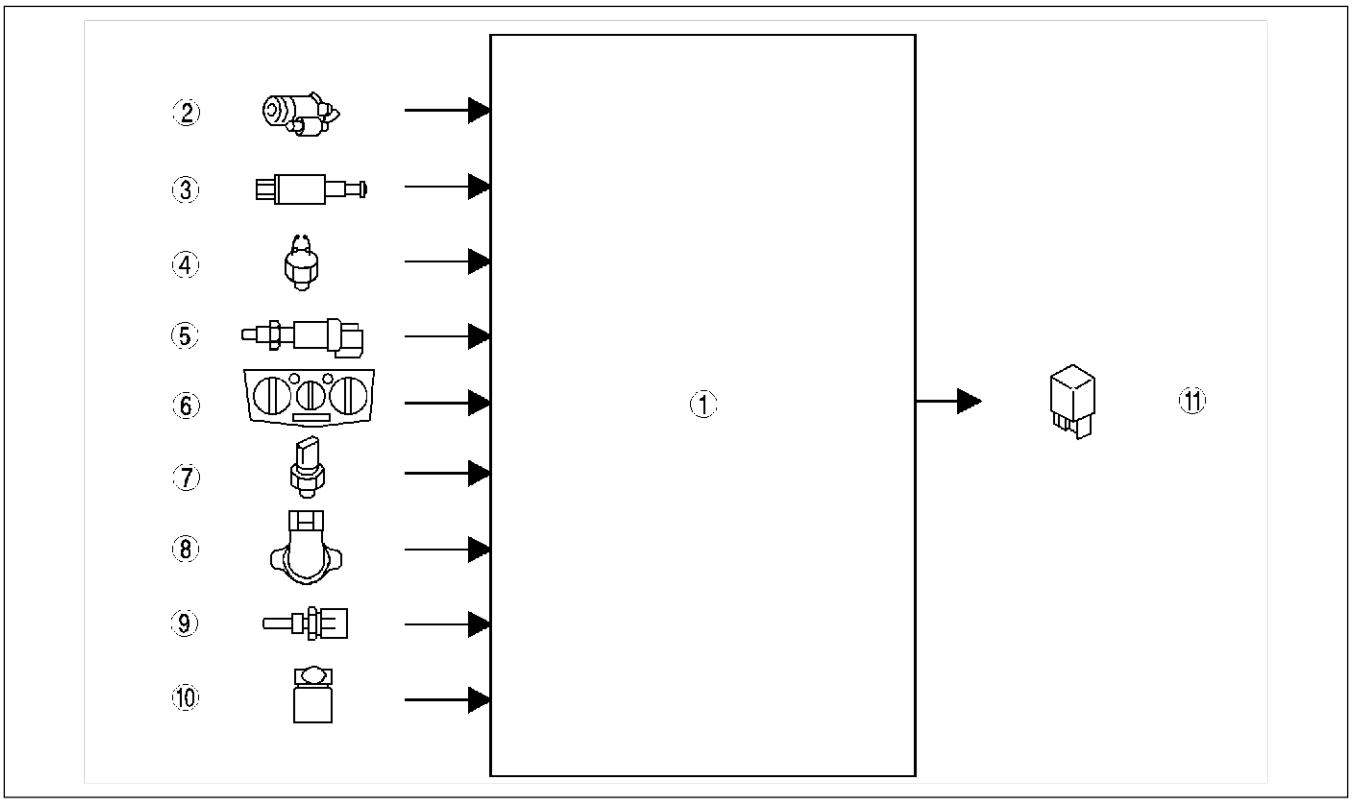

AME4340W058

1	PCM
2	Starter (starter signal)
3	Clutch switch
4	Neutral switch
5	Idle switch
6	A/C switch

7	Refrigerant pressure switch
8	Accelerator position sensor
9	ECT sensor
10	CKP sensor
11	A/C relay

End Of Sie

IMMOBILIZER SYSTEM

AME434018881W19

Outline

- While the immobilizer system is operating, the PCM cuts off fuel delivery and stops pressure feeding fuel to the common rail.

Block Diagram

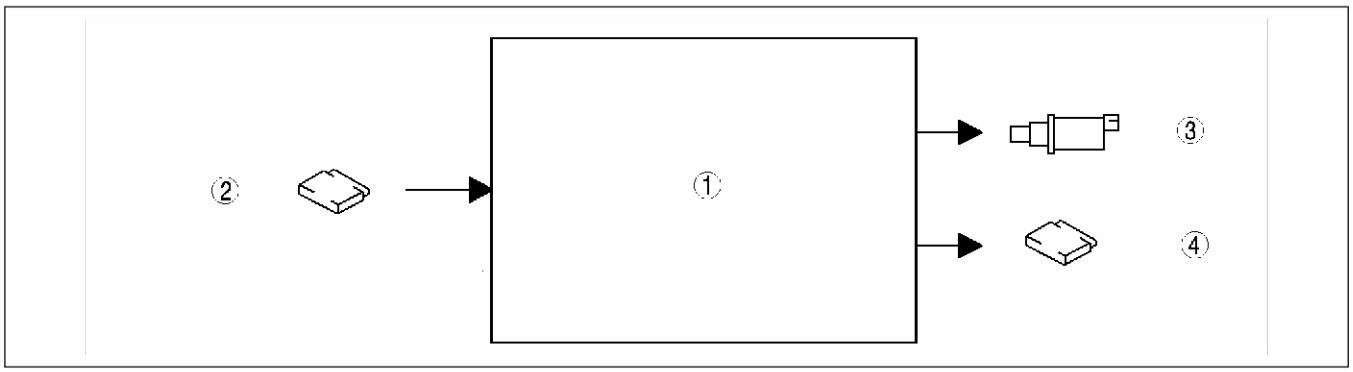

AME4340W059

1	PCM
2	Immobilizer unit

3	Suction control valve
4	IDM

Operation

- When the immobilizer system is activated, the following controls are carried out.
  - — Fuel injector: OFF
  - — Suction control valve: ON

End Of Sie

CONTROLLER AREA NETWORK (CAN)

AME434018881W22

Outline

- The PCM communicates with the following units using CAN to simplify the system.
  - — Water heater unit
  - — DLC-2

Operation

- The PCM transmits the engine revolution signal and intake air temperature signal to the water heater unit.

End Of Sie

ON-BOARD DIAGNOSTIC

OUTLINE

AME437018881W01

- The on-board diagnostic system is essentially carried over from that of the current 626 (GF)/626 Station Wagon (GW) RF Turbo engine models, except for the following features. (See 626 626 Station Wagon Workshop Manual Supplement 1688-1*-00G.)
  - — DTCs, PID monitoring items, and simulation items have been added.
  - — A MIL has been adopted to indicate malfunctions in the engine control system.
  - — A DLC-2 has been added to communicate with the WDS or equivalent.
  - — The OBD tester has been changed from NGS tester to WDS. Accordingly, PID names have been changed.
  - — A KOEO/KOER self-test function has been adopted. Accordingly, the present malfunction or a successful repair is readily confirmed.

End Of Sta

DTC

AME437018881W02

×: Applicable —: Not applicable

DTC	Condition	Detection condition	MIL	Memory function
P0016	Crankshaft position-camshaft position correlation malfunction	Input signals from CKP sensor and CMP sensor are misaligned.	×	×
P0088	Fuel pressure system too high	Fuel pressure is higher than preprogrammed criteria.	—	×
P0091	Suction control valve circuit low input	Input voltage from suction control valve does not change from off to on.	×	×
P0092	Suction control valve circuit high input	Input voltage from suction control valve does not change from on to off.	×	×
P0093	Fuel system leak detection	Fuel pressure after fuel injection is lower than preprogrammed criteria.	×	×
P0097	IAT sensor No.1 circuit low input	Input voltage from IAT sensor No.1 is below 0.1 V.	×	×
P0098	IAT sensor No.1 circuit high input	Input voltage from IAT sensor No.1 is above 5.0 V.	×	×
P0102	MAF sensor circuit low input	Input voltage from MAF sensor is below 0.2 V.	×	×
P0103	MAF sensor circuit high input	Input voltage from MAF sensor is above 4.9 V.	×	×
P0107	Boost sensor circuit low input	Input voltage from boost sensor is below 1.9 V when engine speed is 2,400 rpm or above and accelerator opening angle is 50% or above.	×	×
P0108	Boost sensor circuit high input	Input voltage from boost sensor is above 4.9 V.	×	×
P0112	IAT sensor No.2 circuit low input	Input voltage from IAT sensor No.2 is below 0.1 V.	×	×
P0113	IAT sensor No.2 circuit high input	Input voltage from IAT sensor No.2 is above 5.0 V.	×	×
P0117	ECT sensor circuit low input	Input voltage from ECT sensor is below 0.1 V.	×	×
P0118	ECT sensor circuit high input	Input voltage from ECT sensor is above 5.0V.	×	×
P0121	Accelerator position sensor No.1 circuit performance problem	Input voltage from accelerator position sensor No.1 is above 1.3 V when accelerator pedal is depressed.	×	×
P0122	Accelerator position sensor No.1 circuit low input	Input voltage from accelerator position sensor No.1 is below 0.3 V.	×	×
P0123	Accelerator position sensor No.1 circuit high input	Input voltage from accelerator position sensor No.1 is above 4.7 V.	×	×
P0182	Fuel temperature sensor circuit low input	Input voltage from fuel temperature sensor is below 0.1 V.	×	×
P0183	Fuel temperature sensor circuit high input	Input voltage from fuel temperature sensor is above 5.0 V.	×	×
P0191	Fuel pressure sensor circuit performance problem	Pressure difference between actual fuel pressure and target fuel pressure exceeds preprogrammed criteria.	×	×
P0192	Fuel pressure sensor circuit low input	Input voltage from fuel pressure sensor is below 0.4 V.	×	×
P0193	Fuel pressure sensor circuit high input	Input voltage from fuel pressure sensor is above 4.8 V.	×	×
P0200	Fuel injector circuit malfunction	Injection confirmation signal is not input normally.	×	×

DTC	Condition	Detection condition	MIL	Memory function
P0221	Accelerator position sensor No.2 circuit performance problem	Voltage difference between accelerator position sensor No.1 and accelerator position sensor No.2 exceeds 0.9 V.	×	×
P0222	Accelerator position sensor No.2 circuit low input	Input voltage from accelerator position sensor No.2 is below 0.3 V.	×	×
P0223	Accelerator position sensor No.2 circuit high input	Input voltage from accelerator position sensor No.2 is above 4.7 V.	×	×
P0300	Random misfire detection	Interval time of CKP sensor input signal exceeds preprogrammed criteria.	×	×
P0336	CKP sensor circuit performance problem	Input signal from CKP sensor is not proper pulse number.	×	×
P0337	CKP sensor circuit low input	Input signal from CKP sensor is not input at 12 crankshaft revolutions.	×	×
P0341	CMP sensor circuit performance problem	Input signal from CMP sensor is not proper pulse number.	×	×
P0342	CMP sensor circuit low input	Input signal from CMP sensor is not input at 12 crankshaft revolutions.	×	×
P0380	Glow plug relay circuit malfunction	Input voltage from glow plug relay is as following: — 1.0 V or below when glow plug relay is on. — 4.0 V or above when glow plug relay is off.	×	×
P0500	VSS circuit malfunction	Input vehicle speed signal from instrument cluster is 0 km/h {0 mph} when gear is in position other than neutral, clutch pedal is depressed and engine speed is 2,800 or above.	×	×
P0510	Idle switch circuit malfunction	Input voltage from idle switch is B+ when accelerator position sensor No.1 voltage is below 0.7 V.	×	×
P0512	Engine switch circuit malfunction	Input voltage from engine switch is B+ when engine speed is 1,200 rpm or above.	×	×
P0606	PCM malfunction	PCM does not read DTC from output devices.	×	×
P0661	VSC solenoid valve circuit low input	Input voltage from VSC solenoid valve is below 0.1 V.	—	×
P0662	VSC solenoid valve circuit high input	Input voltage from VSC solenoid valve is above B+.	—	×
P0850	Neutral switch circuit malfunction	Input voltage from neutral switch does not change when vehicle stops after accelerating to above 60 km/h {37 mph} and decelerating to 0 km/h {0 mph} two times.	×	×
P1190	Calibration resistor circuit malfunction	Input voltage from calibration resistor is below 0.2 V or above 4.8 V.	×	×
P1602	Immobilizer unit-PCM communication error	Command transmission from PCM to immobilizer unit exceeds limit. No response from immobilizer unit.	—	×
P1603	Key ID number unregistered in PCM	Key ID numbers are not registered in PCM.	—	×
P1604	Code word unregistered in PCM	Code word is not registered in PCM.	—	×
P1621	Code words do not match after engine cranking	Code words stored in PCM and immobilizer unit do not match.	—	×
P1622	Key ID number mismatch	ID numbers stored in immobilizer unit and PCM do not match. This DTC is indicated only after immobilizer unit is replaced and system is reprogrammed.	—	×
P1623	Cord word or key ID number read/write error in PCM	PCM internal EEPROM damaged.	—	×
P1624	Immobilizer system communication counter = 0	PCM detected immobilizer system communication malfunction more than three times.	—	×
P2228	BARO sensor circuit low input	Input voltage from BARO sensor is below 0.7 V.	×	×
P2229	BARO sensor circuit high input	Input voltage from BARO sensor is above 4.5 V.	×	×

End Of Sie

KOEO/KOER SELF-TEST

AME437018881W07

- The self-test function consists of the KOEO (Key On, Engine Off) self-test, performed when the engine switch is at ON, and the KOER (Key On, Engine Running) self-test, performed when idling. If an abnormality is detected as either self-test is executed, a DTC is displayed on the WDS or equivalent. Using the self-test function, the present malfunction or a successful repair is readily confirmed. Refer to the self-test function table for the corresponding DTCs.

KOEO (Key ON, Engine Off) Self-test

- The KOEO self-test is a powertrain control system self-diagnosis, performed when the engine switch is at ON position and the engine is stopped. A KOEO self-test begins when the connected the WDS or equivalent sends an execute command to the PCM.
- As the KOEO self-test is performed, the PCM performs inspection for the set DTCs and if a malfunction is detected the DTC is displayed on the WDS or equivalent.

KOER (Key ON, Engine Running) Self-test

- The KOER self-test is a powertrain control system self-diagnosis, performed when the engine switch is at ON position and the engine is idling. A KOER self-test begins when the connected the WDS or equivalent sends an execute command to the PCM.
- As the KOER self-test is performed, the PCM performs inspection for the set DTCs and if a malfunction is detected the DTC is displayed on the WDS or equivalent.

KOEO/KOER self-test function table

×: Applicable —: Not applicable

DTC	Condition	KOEO	KOER
P0016	Crankshaft position-camshaft position correlation malfunction	—	—
P0088	Fuel pressure system too high	—	—
P0091	Suction control valve circuit low input	—	—
P0092	Suction control valve circuit high input	—	—
P0093	Fuel system leak detection	—	—
P0097	IAT sensor No.1 circuit low input	×	×
P0098	IAT sensor No.1 circuit high input	×	×
P0102	MAF sensor circuit low input	×	×
P0103	MAF sensor circuit high input	×	×
P0107	Boost sensor circuit low input	×	×
P0108	Boost sensor circuit high input	×	×
P0112	IAT sensor No.2 circuit low input	×	×
P0113	IAT sensor No.2 circuit high input	×	×
P0117	ECT sensor circuit low input	×	×
P0118	ECT sensor circuit high input	×	×
P0121	Accelerator position sensor No.1 circuit performance problem	—	—
P0122	Accelerator position sensor No.1 circuit low input	×	×
P0123	Accelerator position sensor No.1 circuit high input	×	×
P0182	Fuel temperature sensor circuit low input	—	—
P0183	Fuel temperature sensor circuit high input	—	—
P0191	Fuel pressure sensor circuit performance problem	—	—
P0192	Fuel pressure sensor circuit low input	—	—
P0193	Fuel pressure sensor circuit high input	—	—
P0200	Fuel injector circuit malfunction	—	—
P0221	Accelerator position sensor No.2 circuit performance problem	—	—
P0222	Accelerator position sensor No.2 circuit low input	×	×
P0223	Accelerator position sensor No.2 circuit high input	×	×
P0300	Random misfire detection	—	—
P0336	CKP sensor circuit performance problem	—	—
P0337	CKP sensor circuit low input	—	—
P0341	CMP sensor circuit performance problem	—	—
P0342	CMP sensor circuit low input	—	—
P0380	Glow plug relay circuit malfunction	—	—
P0500	VSS circuit malfunction	—	—
P0510	Idle switch circuit malfunction	—	—
P0512	Engine switch circuit malfunction	—	—
P0606	PCM malfunction	—	—
P0661	VSC solenoid valve circuit low input	×	×
P0662	VSC solenoid valve circuit high input	×	×
P0850	Neutral switch circuit malfunction	—	—
P1190	Calibration resistor circuit malfunction	—	—
P1602	Immobilizer unit-PCM communication error	—	—
P1603	Key ID number unregistered in PCM	—	—
P1604	Code word unregistered in PCM	—	—
P1621	Code words do not match after engine cranking	—	—
P1622	Key ID number mismatch	—	—
P1623	Cord word or key ID number read/write error in PCM	—	—
P1624	Immobilizer system communication counter = 0	—	—
P2228	BARO sensor circuit low input	×	×
P2229	BARO sensor circuit high input	×	×

End Of Sie

PID/DATA MONITOR AND RECORD

AME437018881W03

PID monitor table

Monitor item	Definition	Condition/unit	PCM terminal
ACCS	A/C relay	ON/OFF	73
ACSW	A/C switch	ON/OFF	84
BARO	Barometric pressure	kPa, inHg	-
	Barometric pressure signal voltage	V	
BOO	Brake switch	ON/OFF	7
CPP	Clutch switch	ON/OFF	33
CPP/PNP	Neutral switch	Neutral/Drive	56
DTCCNT	DTC count	-	-
ECT	Engine coolant temperature	°C, °F	87
	Engine coolant temperature signal voltage	V	
FAN_DUTY	Variable fan duty cycle	%	22
IAT	Intake air temperature	°C, °F	60
	Intake air temperature signal voltage	V	
IMRC	VSC solenoid valve	ON/OFF	101
INGEAR	In gear	ON/OFF	33, 56
MAF	Mass air flow amount	g/s	9
	Mass air flow signal voltage	V	
MAINRLY	PCM control relay	ON/OFF	69
MAP	Manifold absolute pressure	kPa, inHg	36
	Manifold absolute pressure signal voltage	V	
MIL	Malfunction indicator lamp	ON/OFF	71
RPM	Engine speed	rpm	3, 29
VPWR	Battery positive voltage	V	27
VSS	Vehicle speed	km/h, mph	6

End Of Site

SIMULATION TEST

AME437018881W04

Simulation test item table

×: Applicable

Simulation item	Definition	Operation	Test condition		PCM terminal
			Key ON	Idle	
ACCS	A/C relay	ON or OFF	×	×	73
EGRA	EGR solenoid valve (vent)	Actuated by any duty value (0—100%)	×	×	72
EGRV	EGR solenoid valve (vacuum)	Actuated by any duty value (0—100%)	×	×	99
EGRV2	EGR control solenoid valve	ON or OFF	×	×	77
GP_LMP	Glow indicator light	ON or OFF	×	×	97
GPC	Glow plug relay	ON or OFF	×	×	68
IASV	Intake shutter solenoid valve (half)	ON or OFF	×	×	74
IASV2	Intake shutter solenoid valve (full)	ON or OFF	×	×	100
IMRC	VSC solenoid valve	ON or OFF	×	×	101
VBCV	VBC solenoid valve	Actuated by any duty value (0—100%)	×	×	67

End Of Site

LOCATION INDEX

INTAKE-AIR SYSTEM

AME430001005W01

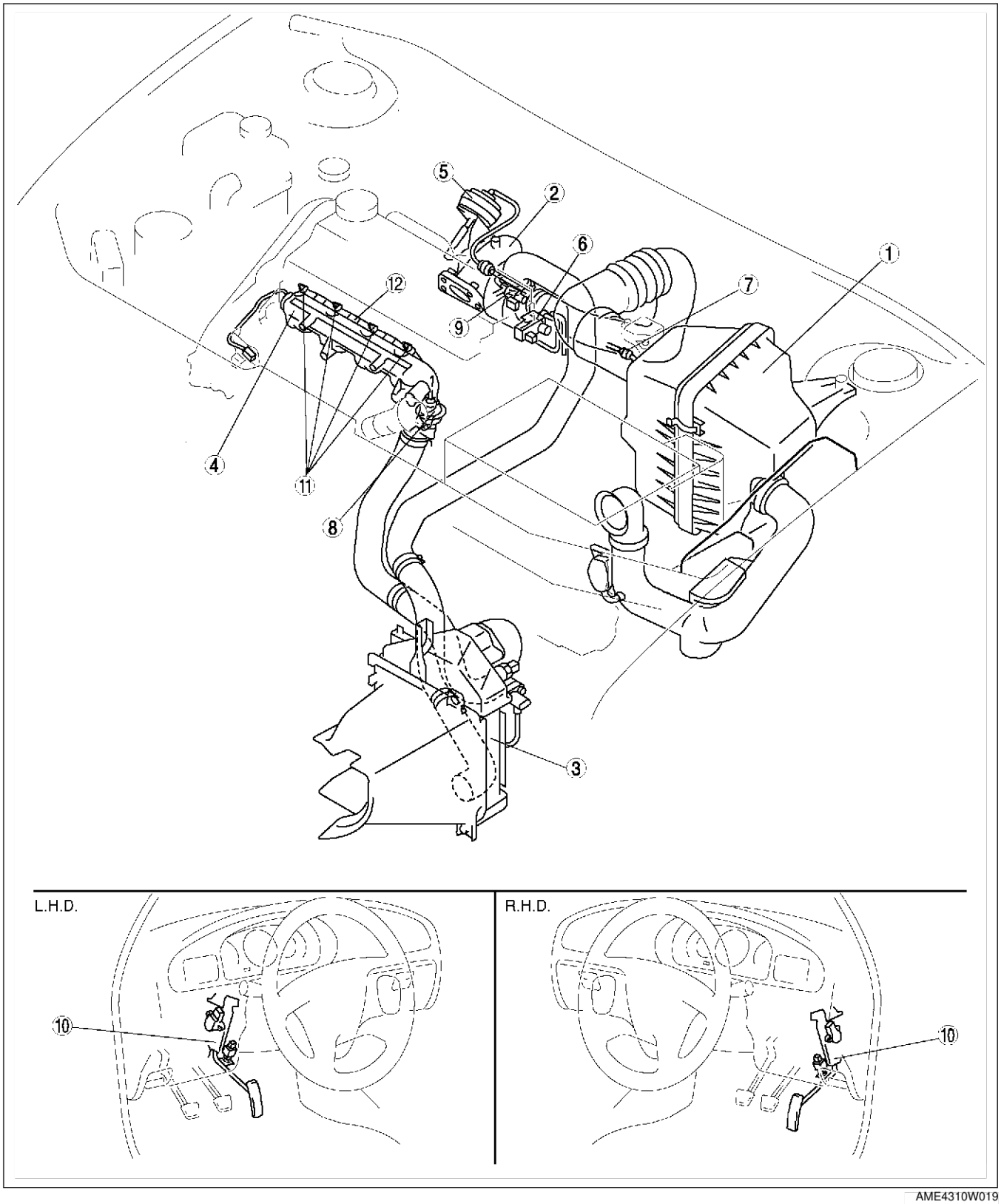

AME4310W019

1	Air cleaner (See F5–66 INTAKE-AIR SYSTEM REMOVAL/INSTALLATION)
2	Turbocharger (See F5–68 TURBOCHARGER INSPECTION)
3	Charge air cooler (See F5–66 INTAKE-AIR SYSTEM REMOVAL/INSTALLATION)
4	Intake manifold (See F5–66 INTAKE-AIR SYSTEM REMOVAL/INSTALLATION)
5	Guide blade actuator (See F5–69 GUIDE BLADE ACTUATOR INSPECTION)
6	VBC solenoid valve (See F5–70 VARIABLE BOOST CONTROL (VBC) SOLENOID VALVE INSPECTION)
7	VBC check valve (See F5–71 VARIABLE BOOST CONTROL (VBC) CHECK VALVE INSPECTION)
8	VSC valve actuator (See F5–71 VARIABLE SWIRL CONTROL (VSC) VALVE ACTUATOR INSPECTION)
9	VSC solenoid valve (See F5–72 VARIABLE SWIRL CONTROL (VSC) SOLENOID VALVE INSPECTION)
10	Accelerator pedal component (See F5–74 ACCELERATOR PEDAL COMPONENT REMOVAL/INSTALLATION) (See F5–74 ACCELERATOR PEDAL COMPONENT DISASSEMBLY/ASSEMBLY)
11	Glow plug (See F5–73 GLOW PLUG REMOVAL/INSTALLATION) (See F5–73 GLOW PLUG INSPECTION)
12	Glow plug lead (See F5–73 GLOW PLUG LEAD INSPECTION)

End Of Sta

FUEL SYSTEM

AME430001006W01

Engine room side

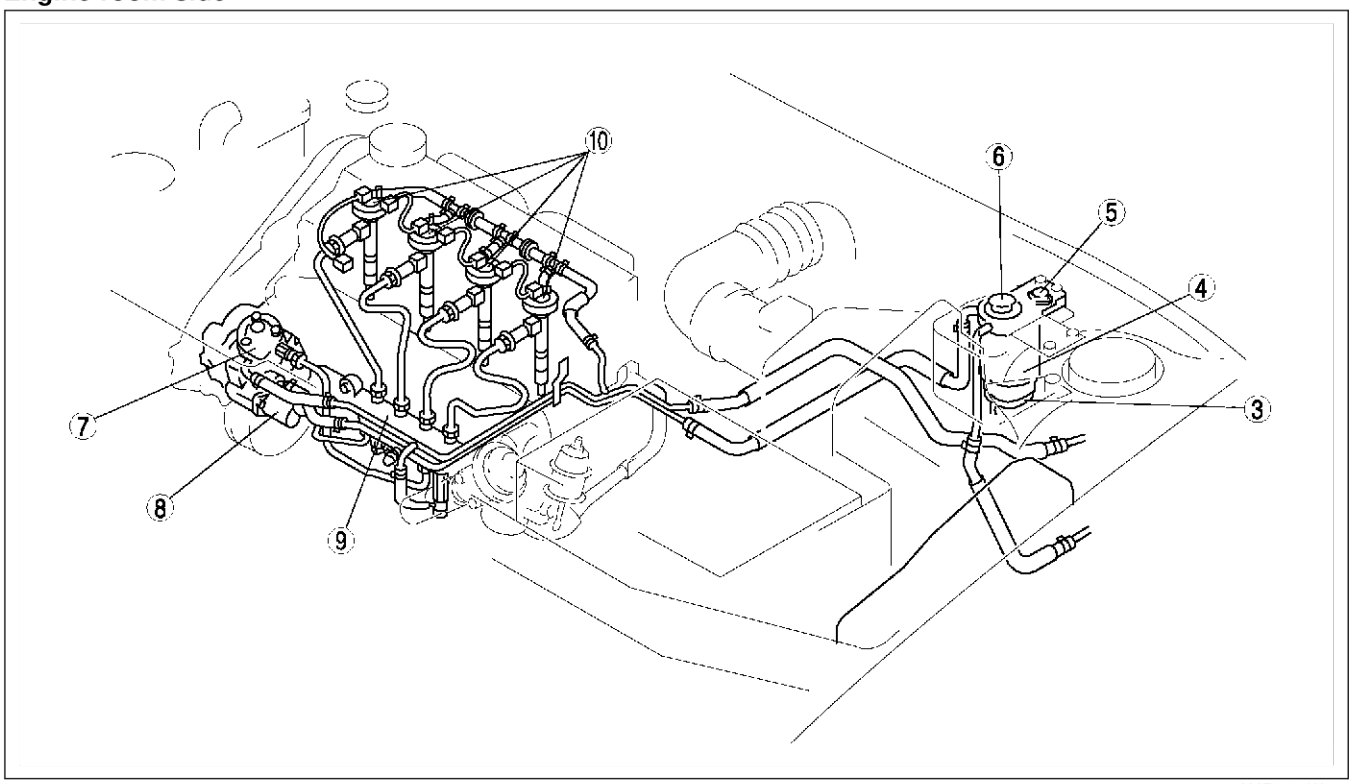

AME4312W029

Fuel tank side

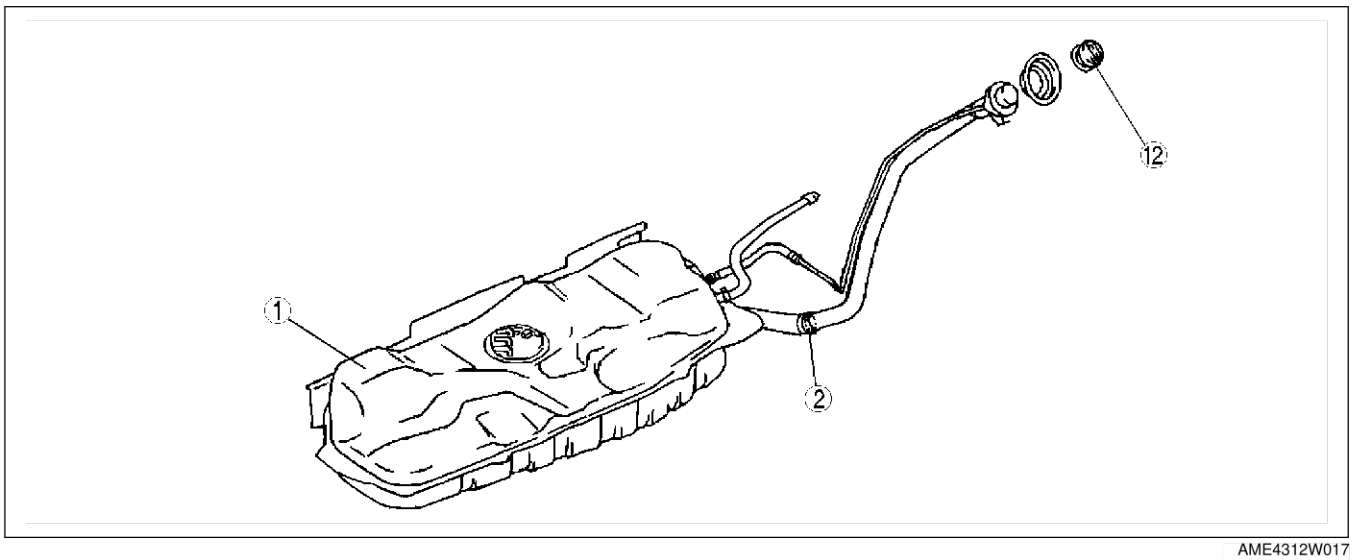

AME4312W017

1	Fuel tank (See F5–76 FUEL TANK REMOVAL/INSTALLATION) (See F5–78 FUEL TANK INSPECTION)
2	Nonreturn valve (See F5–78 NONRETURN VALVE INSPECTION)
3	Sedimentor switch (See F5–81 SEDIMENTOR SWITCH INSPECTION)
4	Fuel filter (See F5–79 FUEL FILTER COMPONENT REMOVAL/INSTALLATION) (See F5–79 FUEL FILTER COMPONENT DISASSEMBLY/ASSEMBLY)
5	Fuel warmer (See F5–80 FUEL WARMER INSPECTION)

6	Priming pump (See F5–80 SEDIMENTOR WATER DRAINING)
7	Supply pump (See F5–82 SUPPLY PUMP REMOVAL/INSTALLATION) (See F5–82 SUPPLY PUMP INSPECTION)
8	Suction control valve (See F5–83 SUCTION CONTROL VALVE INSPECTION)
9	Common rail (See F5–83 COMMON RAIL INSPECTION)
10	Fuel injector (See F5–84 FUEL INJECTOR REMOVAL/INSTALLATION) (See F5–85 FUEL INJECTOR INSPECTION)

EMISSION SYSTEM

AME430001007W01

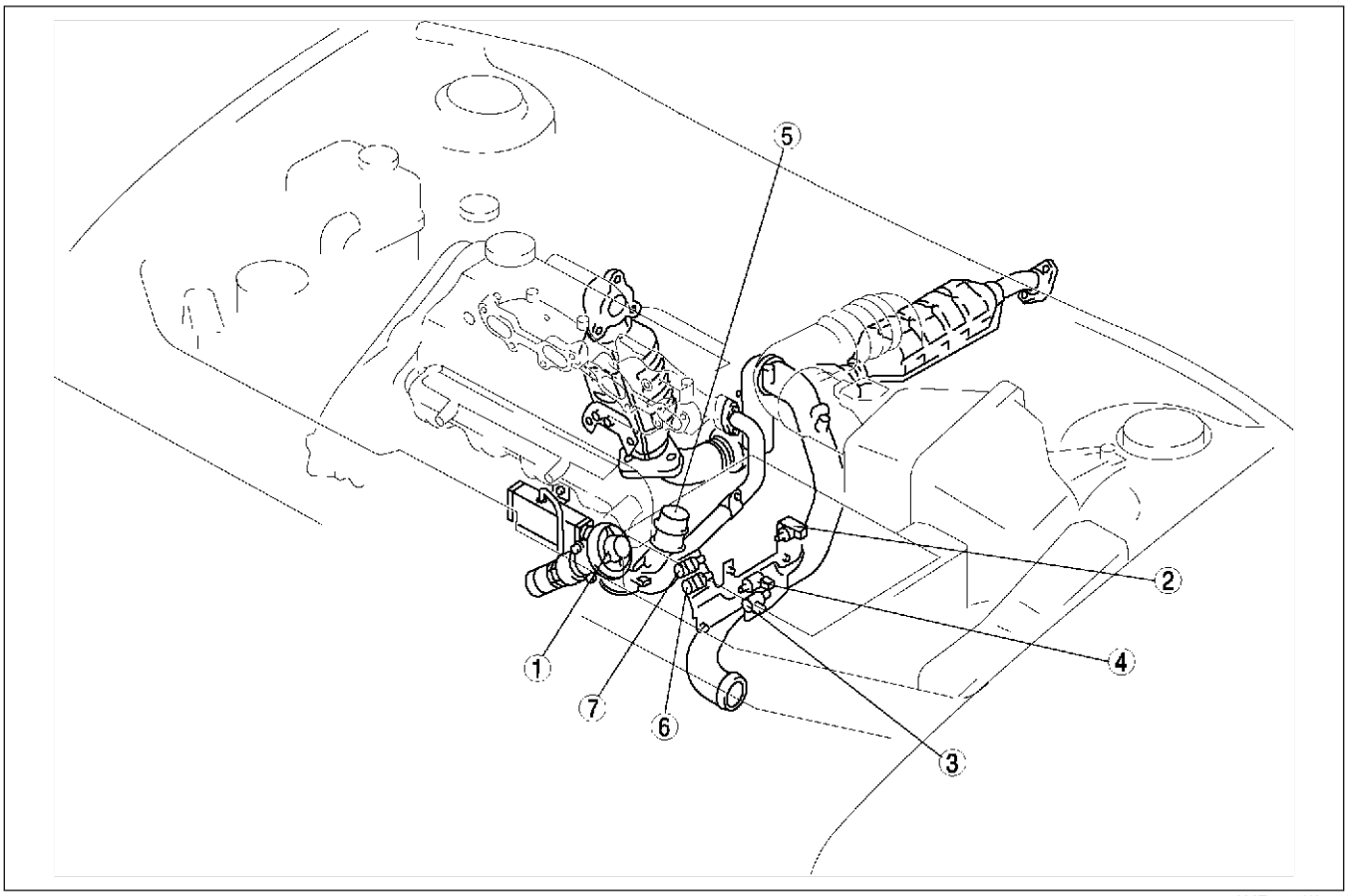

AME4316W025

1	EGR valve (See F5–88 EGR VALVE REMOVAL/ INSTALLATION) (See F5–88 EGR VALVE INSPECTION)
2	EGR control solenoid valve (See F5–91 EGR CONTROL SOLENOID VALVE INSPECTION)
3	EGR solenoid valve (vacuum) (See F5–89 EGR SOLENOID VALVE (VACUUM) INSPECTION)

4	EGR solenoid valve (vent) (See F5–90 EGR SOLENOID VALVE (VENT) INSPECTION)
5	Intake shutter valve actuator (See F5–92 INTAKE SHUTTER VALVE ACTUATOR INSPECTION)
6	Intake shutter solenoid valve (half) (See F5–92 INTAKE SHUTTER SOLENOID VALVE INSPECTION)
7	Intake shutter solenoid valve (full) (See F5–92 INTAKE SHUTTER SOLENOID VALVE INSPECTION)

End Of Sie

CONTROL SYSTEM

AME430018881W01

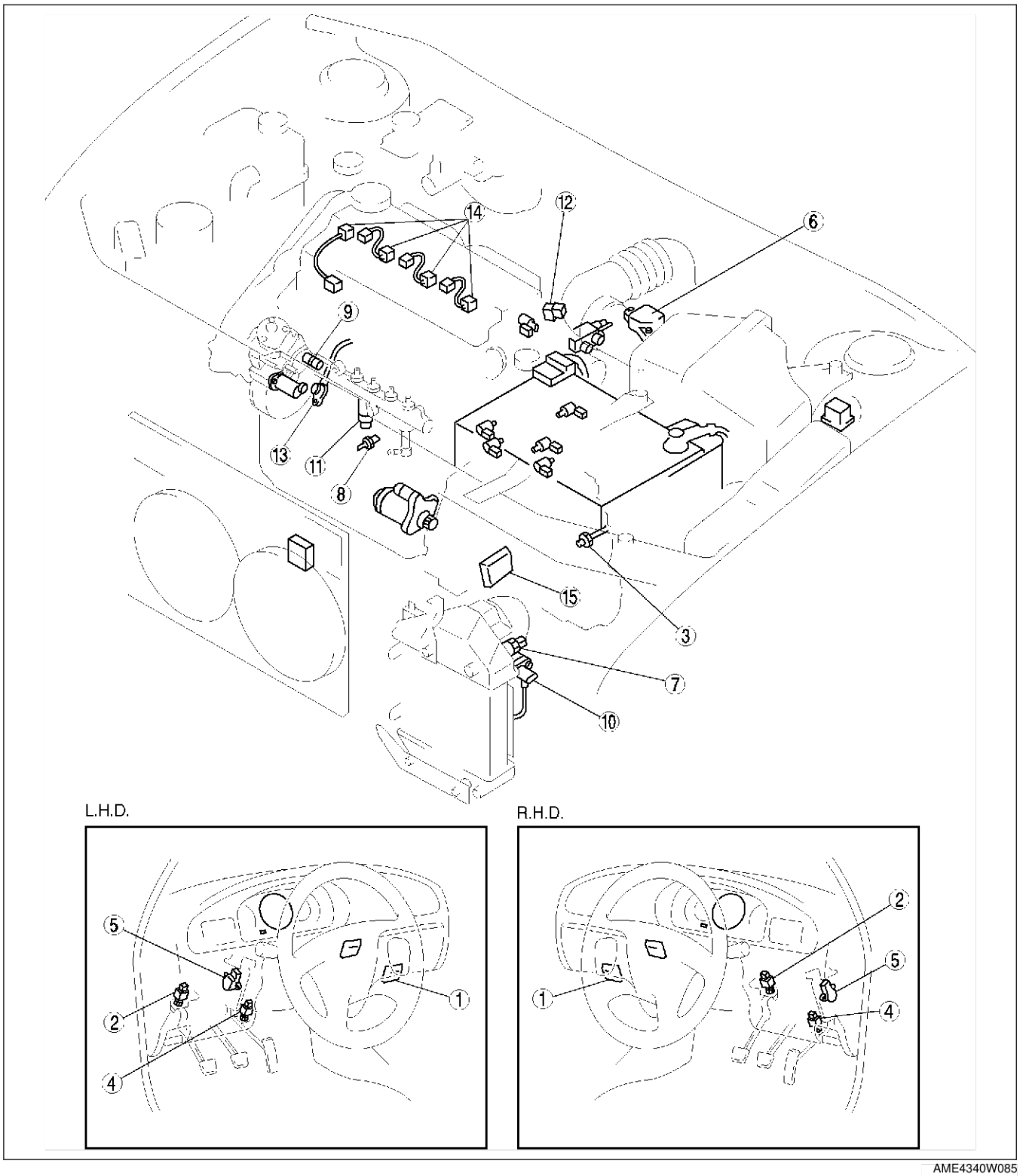

AME4340W085

1	PCM (With built-in BARO sensor) (SeeF5–94 PCM REMOVAL/INSTALLATION) (SeeF5–95 PCM INSPECTION)
2	Clutch switch (SeeF5–98 CLUTCH SWITCH INSPECTION)
3	Neutral switch (SeeF5–99 NEUTRAL SWITCH INSPECTION)
4	Idle switch (SeeF5–100 IDLE SWITCH INSPECTION) (SeeF5–101 IDLE SWITCH ADJUSTMENT)
5	Accelerator position sensor (SeeF5–102 ACCELERATOR POSITION SENSOR INSPECTION) (SeeF5–103 ACCELERATOR POSITION SENSOR ADJUSTMENT)
6	MAF/IAT sensor (SeeF5–104 MASS AIR FLOW (MAF)/INTAKE AIR TEMPERATURE (IAT) SENSOR INSPECTION)
7	IAT sensor No.2 (SeeF5–105 INTAKE AIR TEMPERATURE (IAT) SENSOR NO.2 INSPECTION)
8	ECT sensor (SeeF5–106 ENGINE COOLANT TEMPERATURE (ECT) SENSOR REMOVAL/INSTALLATION) (SeeF5–106 ENGINE COOLANT TEMPERATURE (ECT) SENSOR INSPECTION)
9	Fuel temperature sensor (SeeF5–107 FUEL TEMPERATURE SENSOR INSPECTION)
10	Boost sensor (SeeF5–108 BOOST SENSOR INSPECTION)
11	Fuel pressure sensor (SeeF5–109 FUEL PRESSURE SENSOR INSPECTION)
12	CMP sensor (SeeF5–110 CAMSHAFT POSITION (CMP) SENSOR REMOVAL/INSTALLATION) (SeeF5–110 CAMSHAFT POSITION (CMP) SENSOR INSPECTION)
13	CKP sensor (SeeF5–111 CRANKSHAFT POSITION (CKP) SENSOR REMOVAL/INSTALLATION) (SeeF5–112 CRANKSHAFT POSITION (CKP) SENSOR INSPECTION)
14	Calibration resistor (SeeF5–113 CALIBRATION RESISTOR INSPECTION)
15	IDM (SeeF5–114 INJECTOR DRIVER MODULE (IDM) INSPECTION)

End Of Ste

ENGINE TUNE-UP

ENGINE TUNE-UP PREPARATION

AME430802000W01

Using the WDS or Equivalent

1. Start the engine and warm up completely.
2. Verify that the gear is in neutral position.
3. Verify that the accelerator pedal is released.
4. Turn off the A/C switch.
5. Turn off all electrical loads.
6. Verify that no DTC is present.
7. Connect the WDS or equivalent to the DLC-2.
8. Wait until the electrical fan stops.

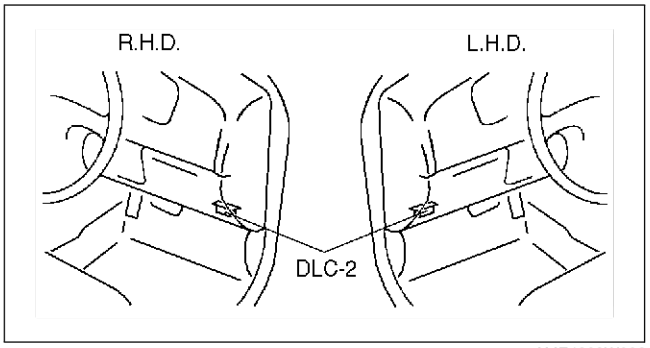

AME4308W002

Using the Dwell Tachometer

1. Start the engine and warm up completely.
2. Verify that the gear is in neutral position.
3. Verify that the accelerator pedal is released.
4. Turn off the A/C switch.
5. Turn off all electrical loads.
6. Verify that no DTC is present.
7. Connect the dwell tachometer to the DLC terminal IG-.
8. Wait until the electrical fan stops.

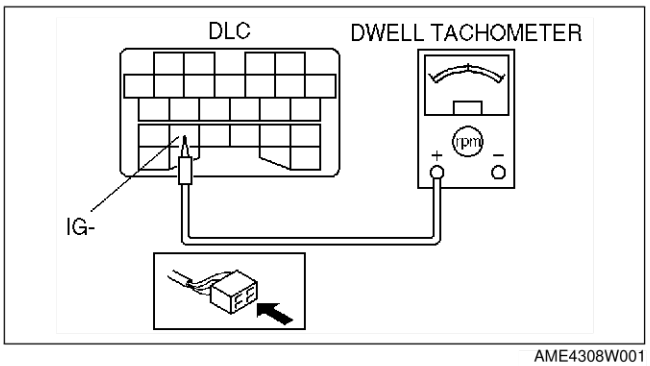

AME4308W001

End Of Sta

IDLE SPEED INSPECTION

AME430802000W02

Using the WDS or Equivalent

1. Perform “Engine Tune-up Preparation”. (See F5–64 ENGINE TUNE-UP PREPARATION.)
2. Monitor the RPM PID using the WDS or equivalent.
3. Verify that engine speed is within specification.
   - If not as specified, inspect the following.
     - — Suction control valve
     - — Fuel injector
     - — Accelerator position sensor
     - — ECT sensor
     - — Fuel pressure sensor
     - — CMP sensor
     - — CKP sensor

Specification

Load condition	Engine speed (rpm)
No load	725—825 (775±50)
A/C switch is on	725—825 (775±50)

Using the Dwell Tachometer

1. Perform “Engine Tune-up Preparation”. (See F5–64 ENGINE TUNE-UP PREPARATION.)
2. Verify that engine speed is within specification.
   - If not as specified, inspect the following.
     - — Suction control valve
     - — Fuel injector
     - — Accelerator position sensor
     - — ECT sensor
     - — Fuel pressure sensor
     - — CMP sensor
     - — CKP sensor

Specification

Load condition	Engine speed (rpm)
No load	725—825 (775±50)
A/C switch is on	725—825 (775±50)

End Of Sta

CORRECTION PROCEDURE

AME430802000W03

F5

Note

- Perform each procedure by selecting the corresponding menu on the WDS screen. These procedures appear when “Powertrain” in the “Toolbox tab” is selected.

Correction after Parts Installation

Note

- Perform this procedure after replacing the PCM and/or fuel injectors.

1. Perform “Engine Tune-up Preparation”. (See F5–64 ENGINE TUNE-UP PREPARATION.)
2. Perform “Correction after Parts Installation” using the WDS or equivalent.

Injection Amount Correction

Note

- Perform this procedure at the recommended interval as described under “Fuel injection system” in “SCHEDULED MAINTENANCE.”

1. Perform “Engine Tune-up Preparation”. (See F5–64 ENGINE TUNE-UP PREPARATION.)
2. Perform “Injection Amount Correction” using the WDS or equivalent.

MAF Correction

Note

- Perform this procedure after replacing the MAF/IAT sensor or at the recommended interval as described under “E.G.R. system” in “SCHEDULED MAINTENANCE.”

1. Perform “Engine Tune-up Preparation”. (See F5–64 ENGINE TUNE-UP PREPARATION.)
2. Perform “MAF Correction” using the WDS or equivalent.

End Of Sta

INTAKE-AIR SYSTEM

VACUUM TUBE ROUTING DIAGRAM

AME431020030W01

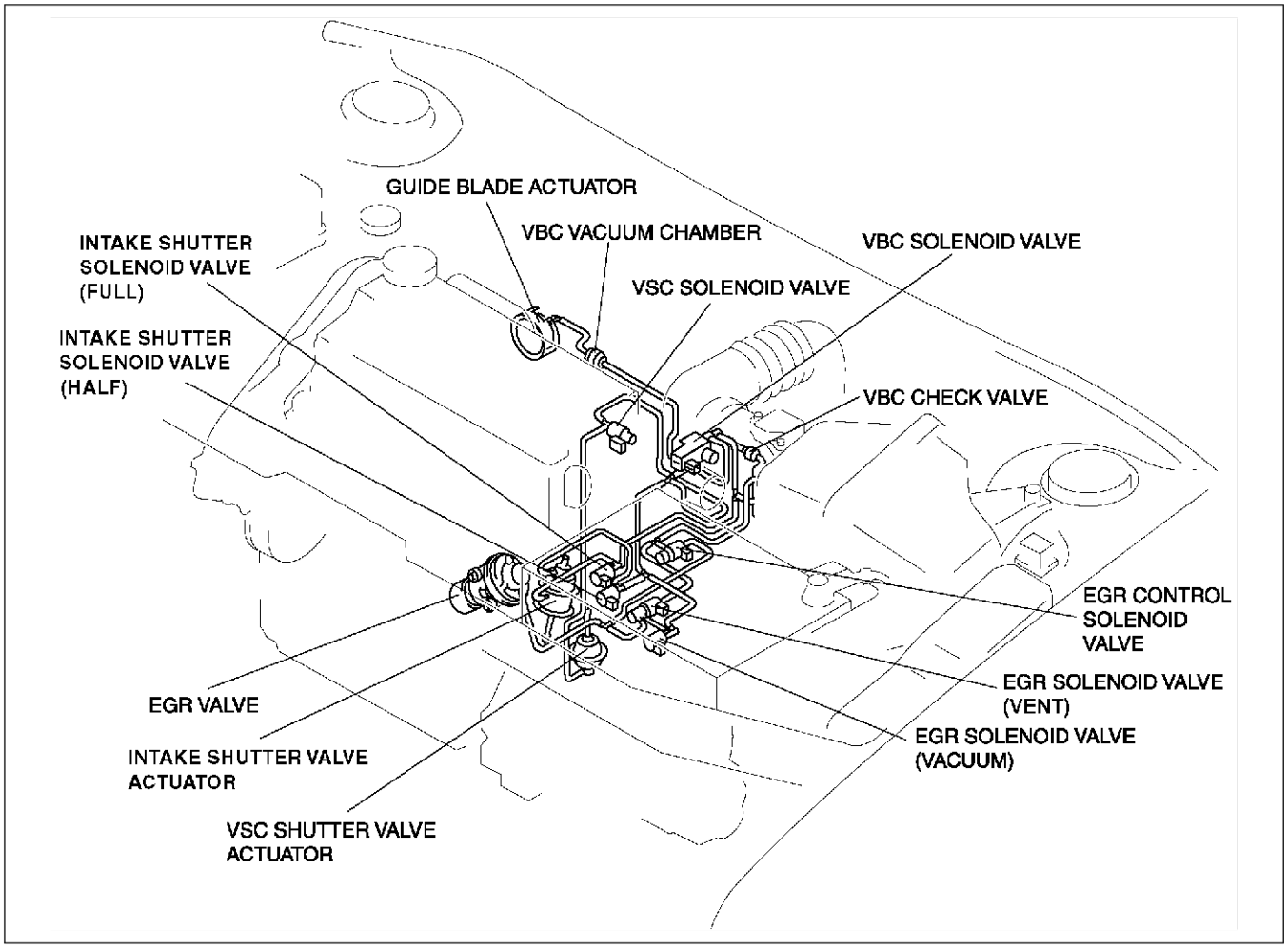

AME4316W020

End Of Sie

INTAKE-AIR SYSTEM REMOVAL/INSTALLATION

AME431001005W01

Warning

- **When the engine and intake-air system are hot, they can cause severe burns or injury. Turn off the engine and wait until they are cool before removing or installing the intake-air system.**
- **Fuel vapor is hazardous. It can easily ignite, causing serious injury and damage. Always keep sparks and flames away from fuel.**
- **Fuel line spills and leakage are dangerous. Fuel can ignite and cause serious injuries or death and damage, Fuel can also irritate skin and eyes. To prevent this, always complete the following "Fuel Line Safety Procedure". (See F5–75 Fuel Line Safety Procedures.)**

Note

- Perform "Correction after Parts Installation" after replacing the MAF IAT sensor. (See F5–65 MAF Correction.)

1. Disconnect the negative battery cable.

2. Remove in the order indicated in the table.
3. Install in the reverse order of removal.

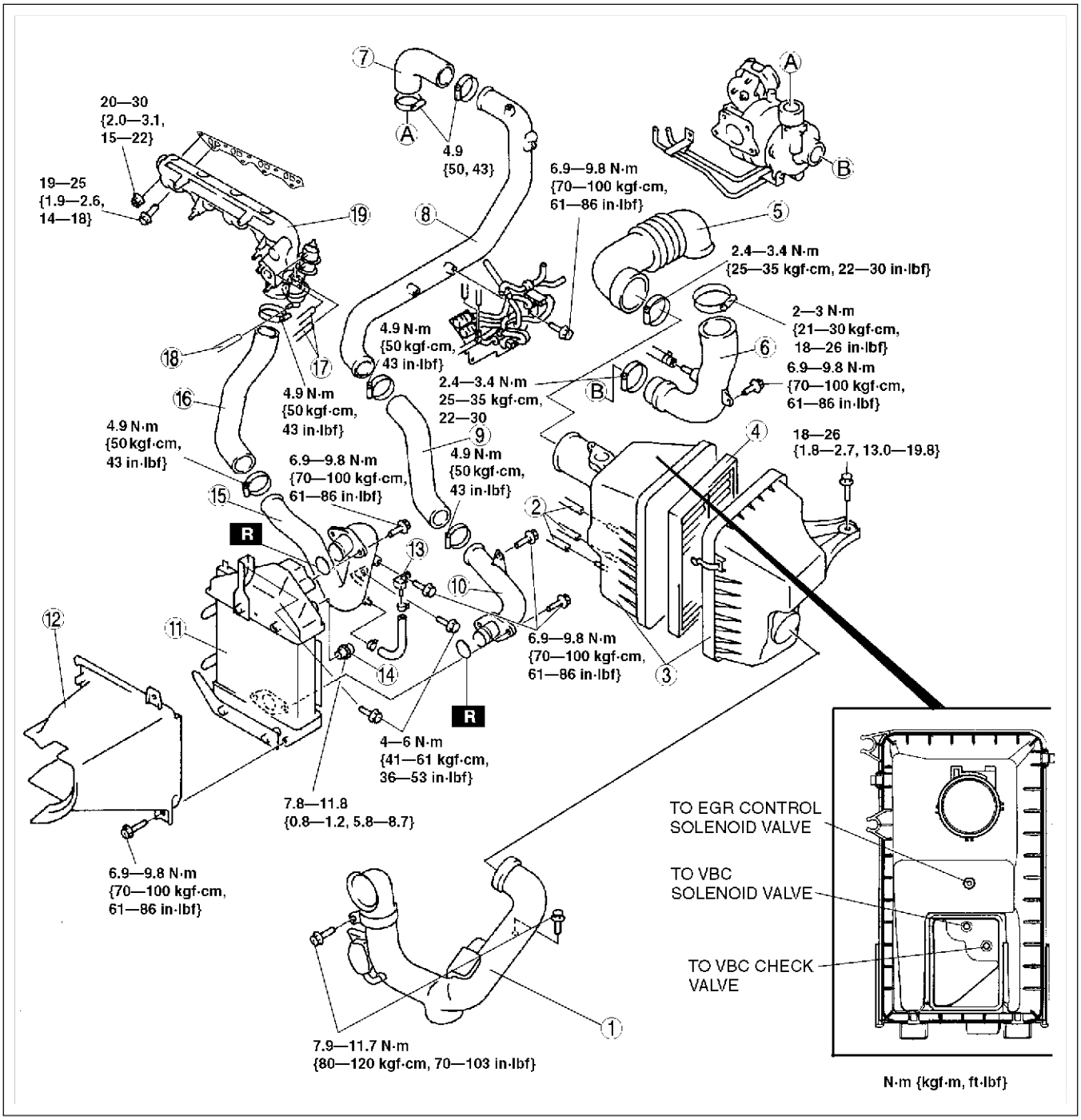

AME4310W018

1	Fresh-air duct
2	Vacuum hose
3	Air cleaner
4	Air cleaner element
5	Air hose
6	Air pipe
7	Air hose
8	Air pipe (See F5–68 Air Pipe Removal Note)
9	Air hose
10	Air pipe

11	Charge air cooler
12	Air duct
13	Boost sensor
14	IAT sensor No. 2
15	Air pipe
16	Air hose
17	Vacuum hose (VSC valve actuator)
18	Vacuum hose (Intake shutter valve actuator)
19	Intake manifold (See F5–68 Intake Manifold Removal Note)

Air Pipe Removal Note

1. Remove the battery and the battery tray before removing the air pipe. (See G–9 BATTERY REMOVAL/INSTALLATION.)

Intake Manifold Removal Note

1. Remove the supply pump before removing the intake manifold. (See F5–82 SUPPLY PUMP REMOVAL/INSTALLATION.)
2. Remove the EGR valve before removing the intake manifold. (See F5–88 EGR VALVE REMOVAL/INSTALLATION.)

End Of Sta

TURBOCHARGER INSPECTION

AME431013700W02

Note

- If the following problems exist, diagnosis the turbocharger using the following symptom troubleshooting procedures.

1. Lack of power: perform “NO.12 LACK/LOSS OF POWER”. (See F5–225 NO.12 LACK/LOSS OF POWER-ACCELERATION/CRUISE.)
2. Oil leak: perform “NO.16 HIGH OIL CONSUMPTION/LEAKAGE”. (See F5–237 NO.16 HIGH OIL CONSUMPTION/LEAKAGE.)
3. Noise: perform “NO. 21 ENGINE NOISE”. (See F5–244 NO.21 ENGINE NOISE.)

Compressor Wheel Inspection

1. Remove the air pipe between the air cleaner and the turbocharger. (See F5–66 INTAKE-AIR SYSTEM REMOVAL/INSTALLATION.)
2. Visually inspect the compressor wheel from view A and verify that all fins are free from damage, cracks or bends.
   - If there are damaged fins, cracks or bends, replace the turbocharger.

Note

- To make the inspection easier, set a small mirror as shown in the figure and use a penlight.
- If the compressor wheel is interfering with the compressor housing, it is likely that the fin edges are cracked, damaged, or bent.
- If the compressor wheel is damaged, check the following before replacing the turbocharger to avoid reoccurrence of the problem.
  - — Foreign material in intake air/exhaust system.
  - — Oil pipe clogging.

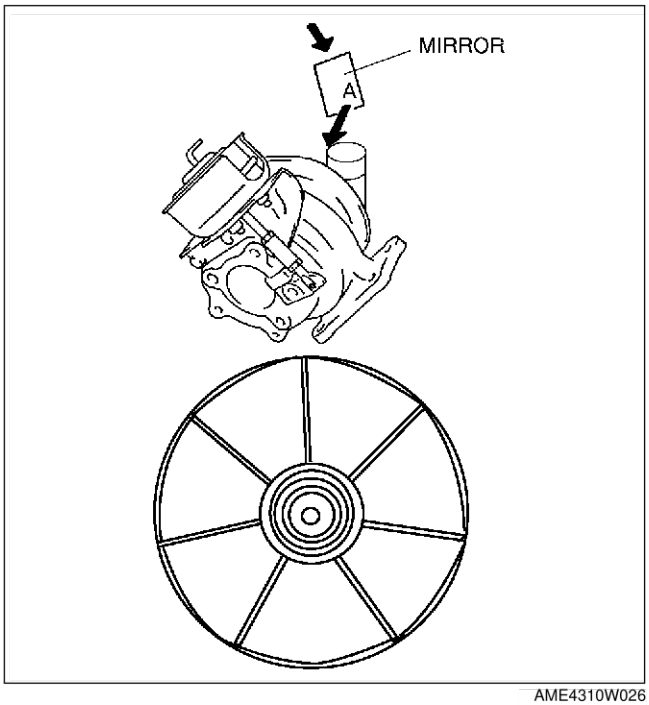

AME4310W026

Turbine Wheel Inspection

1. Remove the joint pipe between the air cleaner and the turbocharger. (See F5–86 EXHAUST SYSTEM REMOVAL/INSTALLATION.)
2. Visually inspect the turbine wheel from view B and verify that all fins are free from damage, cracks or bends.
   - If there are damaged fins, cracks or bends, replace the turbocharger.

Note

- To make the inspection easier, set a small mirror as shown in the figure and use a penlight.
- If the turbine wheel is interfering with the turbine housing, it is likely that the fin edges are cracked, damaged, or bent.
- If the turbine wheel is damaged, check the following before replacing the turbocharger to avoid reoccurrence of the problem.
  — Foreign material in intake air/exhaust system.
  — Oil pipe clogging.

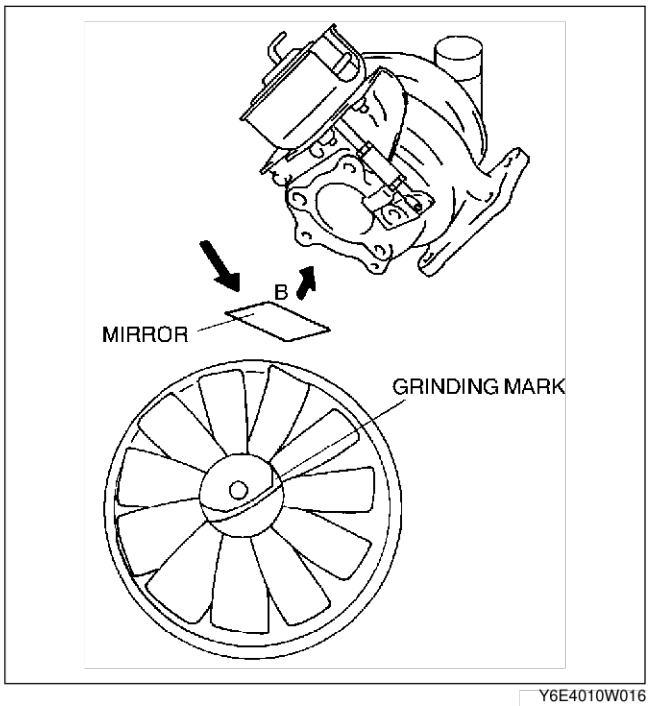

Y6E4010W016

End Of Sie

GUIDE BLADE ACTUATOR INSPECTION

AME431013700W06

1. Disconnect the vacuum hose from the guide blade actuator.
2. Connect the vacuum pump to the guide blade actuator.
3. Apply vacuum and verify that the rod moves as specified.
   - If not as specified, replace the turbocharger.

Specification

Vacuum (kPa {mmHg, inHg})	Rod movement
Below –14.5 {–108, –4.27}	Starts to move
Above –44.9 {–337, –13.3}	Fully pulled

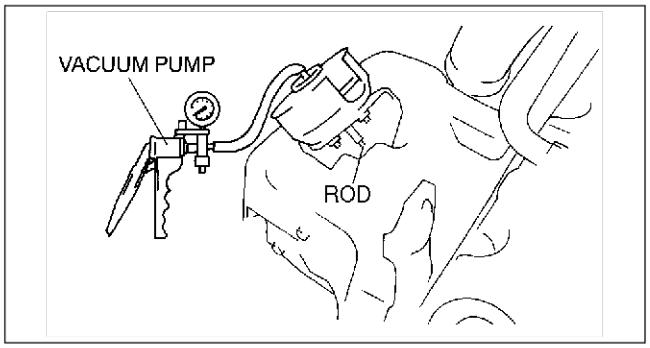

AME4310W010

End Of Sie

VARIABLE BOOST CONTROL (VBC) SOLENOID VALVE INSPECTION

AME431013710W08

Air Tightness Inspection

1. Connect a vacuum pump to the VBC solenoid valve port A, and apply vacuum.

   Note
   - Even if there is vacuum leakage, the VBC solenoid valve is okay if vacuum increases to **–47 kPa {–353 mmHg, –14 inHg} or more**.

2. Verify that the vacuum increases to **–47 kPa {–353 mmHg, –14 inHg} or more**.
   - If not as specified, replace the VBC solenoid valve.
   - If VBC solenoid valve is okay, perform the “Operation Inspection”.

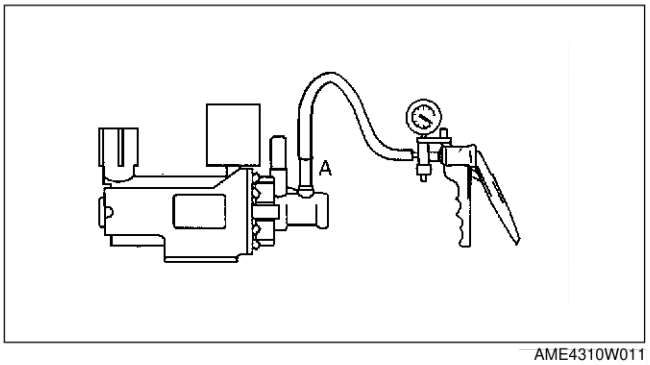

AME4310W011

Operation Inspection

1. Connect a vacuum pump to the VBC solenoid valve port A, and apply vacuum.
2. Turn the engine switch to ON.
3. Simulate the VBCV PID to **100 %** using the WDS or equivalent.
4. Verify that the vacuum is decreased.
   - If not as specified, replace the VBC solenoid valve.
   - If VBC solenoid valve is okay, perform the “Resistance Inspection”.

Resistance Inspection

Note
- Perform the following test only when directed.

1. Measure the resistance between the VBC solenoid valve terminals using an ohmmeter.
   - If not as specified, replace the VBC solenoid valve.
   - If VBC solenoid valve is okay, perform the “Circuit Open/Short Inspection”.

   Specification
   11—13 kilohms [20°C {68°F}]

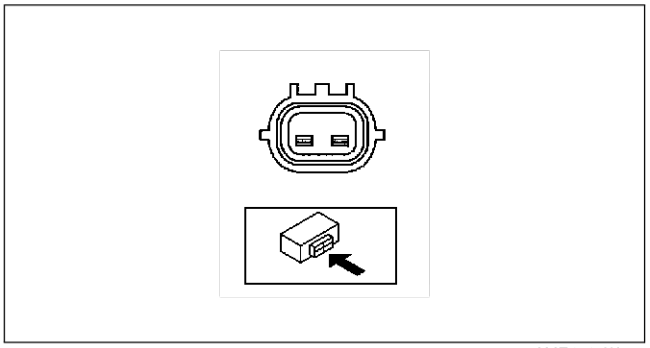

AME4310W022

Circuit Open/Short Inspection

1. Inspect for open/short circuit in the following wiring harnesses.
   - If there is open/short circuit, repair or replace wiring harnesses.

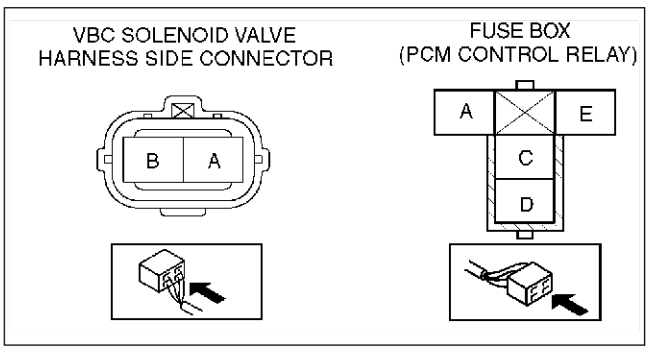

AME4310W023

Open circuit

- If there is no continuity, the circuit is open. Repair or replace the harness.
  - — VBC solenoid valve terminal A (harness-side) and PCM control relay terminal C
  - — VBC solenoid valve terminal B (harness-side) and PCM connector terminal 67

Short circuit

- If there is continuity, the circuit is shorted. Repair or replace the harness.
  - — VBC solenoid valve terminal A (harness-side) and GND
  - — VBC solenoid valve terminal B (harness-side) and power supply

End Of Sub

VARIABLE BOOST CONTROL (VBC) CHECK VALVE INSPECTION

AME431013710W10

1. Remove the VBC check valve. (See F5–66 VACUUM TUBE ROUTING DIAGRAM.)
2. Blow through port A and verify that the air flows from port B.
   - If not as specified, replace the VBC check valve.
3. Blow through port B and verify that the air does not flow from port A.
   - If not as specified, replace the VBC check valve.

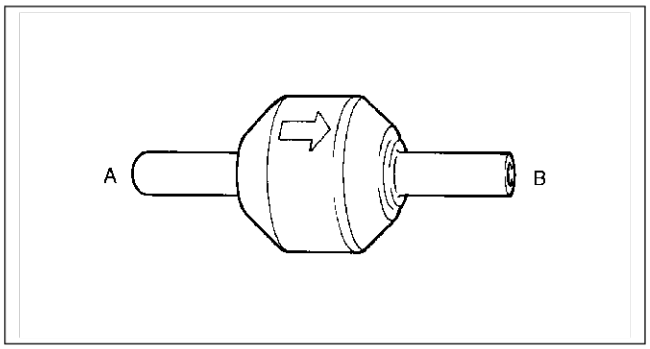

Y6E4010W034

End Of Sub

VARIABLE SWIRL CONTROL (VSC) VALVE ACTUATOR INSPECTION

AME431013110W06

1. Disconnect the vacuum hose from the VSC solenoid valve.
2. Connect a vacuum pump to the vacuum hose.

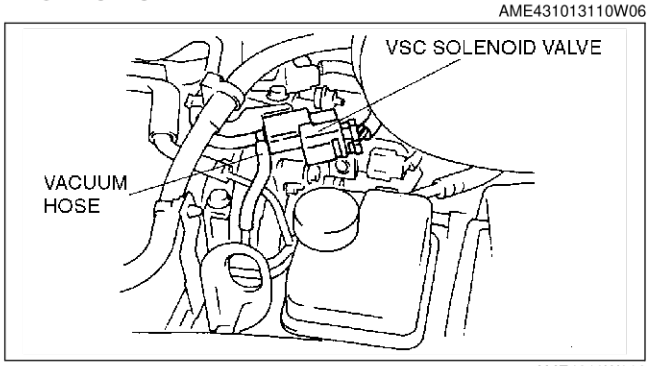

AME4310W012

3. Apply vacuum and verify that the rod moves as specified.
   - If not as specified, replace the intake manifold.

Specification

Vacuum (kPa {mmHg, inHg})	Rod movement
Below –20 {–150, –5.9}	Starts to move
Above –69.4 {–521, –20.5}	Fully pulled

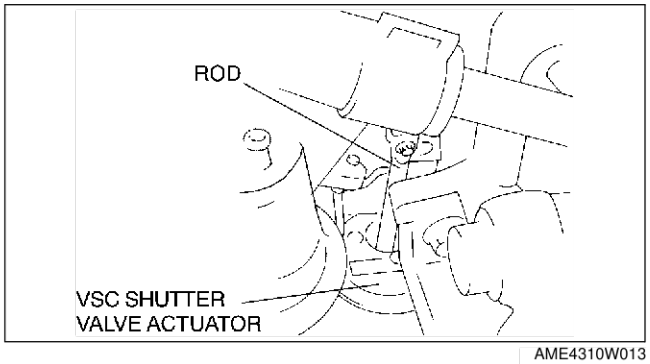

AME4310W013

End Of Sub

F5

VARIABLE SWIRL CONTROL (VSC) SOLENOID VALVE INSPECTION

AME431013110W08

Note
- Perform the following test only when directed.

1. Inspect airflow between the ports under the following conditions.
   - If not as specified, replace the VSC solenoid valve.
   - If VSC solenoid valve is okay, perform the “Circuit Open/Short Inspection”.

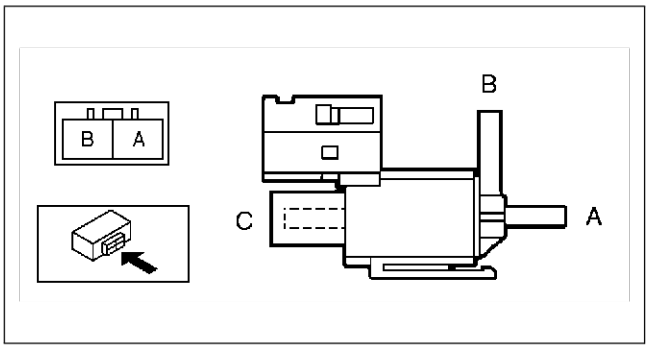

AME4310W005

: Airflow

Step	Terminal		Port		
	A	B	A	B	C
1				○—○	
2	B+	GND	○—○		

YTA4114W105

Circuit Open/Short Inspection

1. Inspect for open/short circuit in the following wiring harnesses.
   - If there is open/short circuit, repair or replace wiring harnesses.

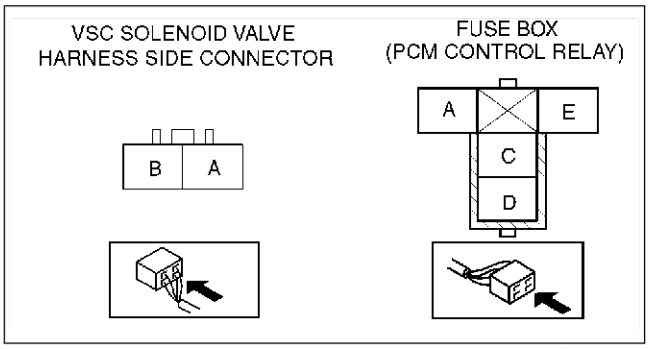

AME4310W024

Open circuit
- If there is no continuity, the circuit is open. Repair or replace the harness.
  - — VSC solenoid valve terminal A (harness-side) and PCM control relay terminal C
  - — VSC solenoid valve terminal B (harness-side) and PCM terminal 101

Short circuit
- If there is continuity, the circuit is short. Repair of replace the harness.
  - — VSC solenoid valve terminal A (harness-side) and GND.
  - — VSC solenoid valve terminal B (harness-side) and power supply

End Of Sec

GLOW PLUG REMOVAL/INSTALLATION

AME431018601W01

Caution
- **Do not damage the heated section of the glow plug.**
- **Do not reuse a glow plug that has been dropped over a height of 10 cm, even when there are no scratches and resistance is normal (approx. 0.6 ohms [20°C {68°F}]).**
- **Do not remove the glow plug unless you are replacing it.**

1. Disconnect the negative battery cable.
2. Remove in the order indicated in the table.

1	Glow plug lead
2	Glow plug (See F5–73 Glow Plug Removal Note) (See F5–73 Glow Plug Installation Note)

3. Install in the reverse order of removal.

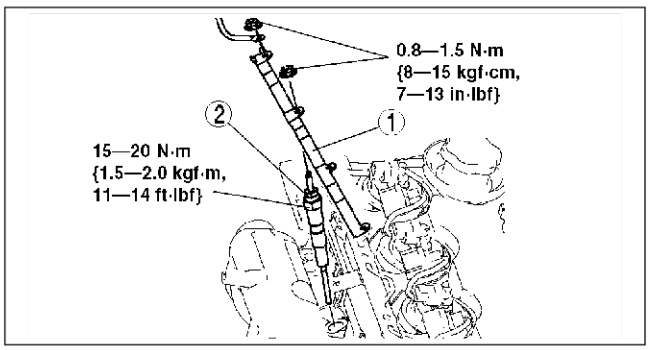

AME4310W014

Glow Plug Removal Note
1. When removing the glow plug, first loosen it at least one pitch using a tool, then loosen by hand.

Glow Plug Installation Note
1. Tighten the glow plug at least one pitch by hand, and continue tightening with a tool.

End Of Sie

GLOW PLUG INSPECTION

AME431018601W02

Note
- Perform the following test only when directed.

1. Remove the glow plug lead. (See F5–73 GLOW PLUG REMOVAL/INSTALLATION.)
2. Inspect for continuity between the glow plug terminal and the cylinder head using an ohmmeter.
   - If there is no continuity, replace the glow plug.

   Resistance
   Approx. 0.6 ohms [20°C {68°F}]

3. Install the glow plug lead.

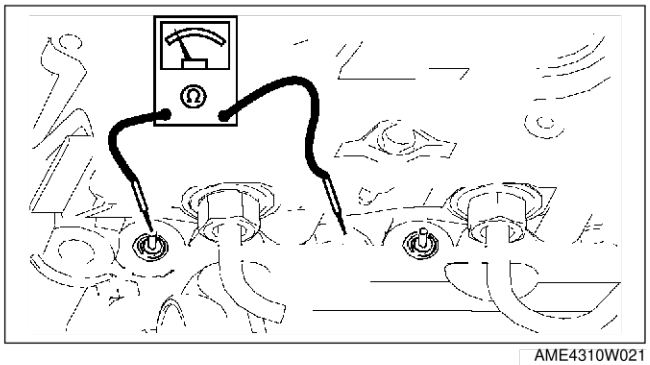

AME4310W021

End Of Sie

GLOW PLUG LEAD INSPECTION

AME431018611W01

1. Remove the glow plug lead from the glow plug. (See F5–73 GLOW PLUG REMOVAL/INSTALLATION.)
2. Verify that the glow plug lead is not broken or bent.
3. Verify there is continuity at both ends of the glow plug lead.
   - If there is no continuity, replace the glow plug lead.

   Note
   - When inspecting for continuity in the glow plug lead, do not let the uncovered parts (A) come into contact with other parts and be shorted.

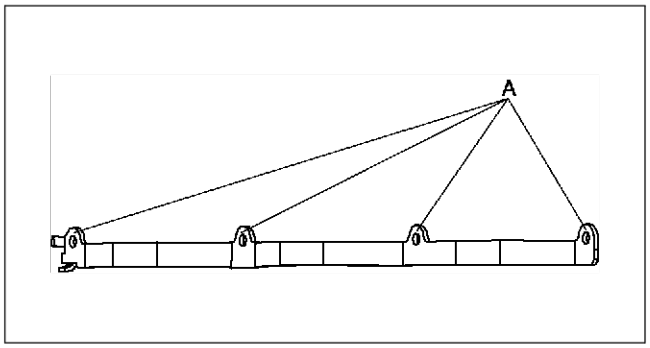

AME4310W020

F5

ACCELERATOR PEDAL COMPONENT REMOVAL/INSTALLATION

AME431041600W01

1. Disconnect the negative battery cable.
2. Remove in the order indicated in the table.

1	Accelerator position sensor connector
2	Idle switch connector
3	Pedal component

3. Install in the reverse order of removal.

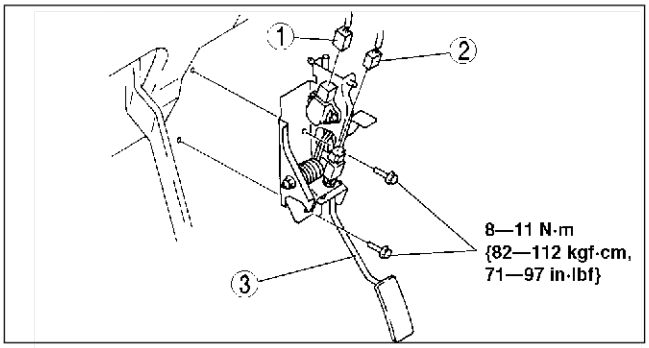

AME4310W015

End Of Sie

ACCELERATOR PEDAL COMPONENT DISASSEMBLY/ASSEMBLY

AME431041600W02

1. Remove the accelerator pedal component. (See F5–74 ACCELERATOR PEDAL COMPONENT REMOVAL/INSTALLATION.)
2. Disassemble in the order indicated in the table.

1	Idle switch
2	Accelerator position sensor
3	Accelerator pedal

3. Assemble in the reverse order of removal.
4. Install the accelerator pedal component. (See F5–74 ACCELERATOR PEDAL COMPONENT REMOVAL/INSTALLATION.)
5. Adjust the accelerator position sensor. (See F5–103 ACCELERATOR POSITION SENSOR ADJUSTMENT.)
6. Adjust the idle switch. (See F5–101 IDLE SWITCH ADJUSTMENT.)

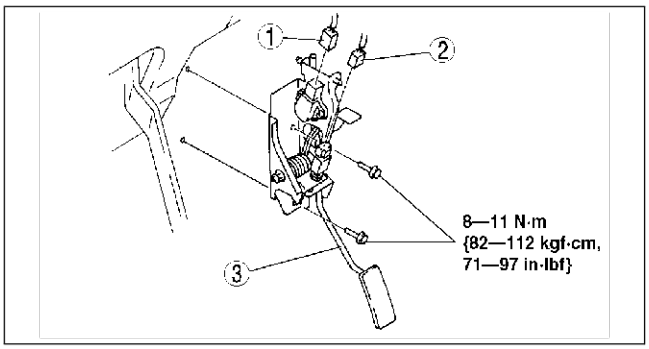

AME4310W025

End Of Sie

FUEL SYSTEM

BEFORE REPAIR PROCEDURE

AME431201006W03

Warning
- **Fuel vapor is hazardous. It can easily ignite, causing serious injury and damage. Always keep sparks and flames away from fuel.**
- **Fuel line spills and leads are dangerous. Fuel can ignite and cause serious injuries or death and damage. Fuel can also irritate skin and eyes. To prevent this, always complete the following "Fuel Line Safety Procedures".**

Fuel Line Safety Procedures

Note
- Fuel in the fuel system is under high pressure when the engine is not running.

1. Avoid fuel line spills and leaks by completing the following procedures.
   (1) Remove the fuel-filler cap and release the pressure in the fuel tank.
   (2) When disconnecting a fuel line hose, wrap a rag around it to protect against fuel leakage.
   (3) Plug the hose after removal.

End Of Sie

AFTER REPAIR PROCEDURE

AME431201006W04

Warning
- **Fuel line spills and leakage are dangerous. Fuel can ignite and cause serious injuries or death and damage. When installing the fuel hose, observe "Fuel Hose Installation" described below.**

Fuel Line Air Bleeding

Caution
- **Continuously cranking the engine for over 30 seconds can damage the battery and the starter.**

1. Continue cranking the engine for **30 seconds** and stop for **5—10 seconds** until the engine starts.

Fuel Hose Installation

1. Verify that there is no damage or deformation on the fuel hose and fuel pipe when installing.

End Of Sie

FUEL TANK REMOVAL/INSTALLATION

AME431242110W01

Warning

- **Repairing a fuel tank that has not been properly steam cleaned can be dangerous. Explosion or fire may cause death or serious injury. Always properly steam clean a fuel tank before repairing it.**
- **Fuel line spills and leakage are dangerous. Fuel can also irritate skin and eyes. To prevent this, do not damage the sealing surface of the fuel gauge sender unit when removing or installing.**

1. Verify that vehicle is level.
2. Complete the “BEFORE REPAIR PROCEDURE”. (See F5–75 BEFORE REPAIR PROCEDURE.)
3. Disconnect the negative battery cable.
4. Remove the front seats.
5. Remove the front scuff plates.
6. Remove the rear scuff plates.
7. Remove the console lower cover.
8. Loosen the parking brake lever installation bolts.
9. Partially peel back the floor covering until the service hole cover appears.
10. Remove the fuel gauge sender unit. (See T–54 FUEL GAUGE SENDER UNIT REMOVAL/INSTALLATION.)
11. Siphon the fuel from the fuel tank.
12. Remove in the order indicated in the table.
13. Install in the reverse order of removal.
14. Complete the “AFTER REPAIR PROCEDURE”. (See F5–75 AFTER REPAIR PROCEDURE.)

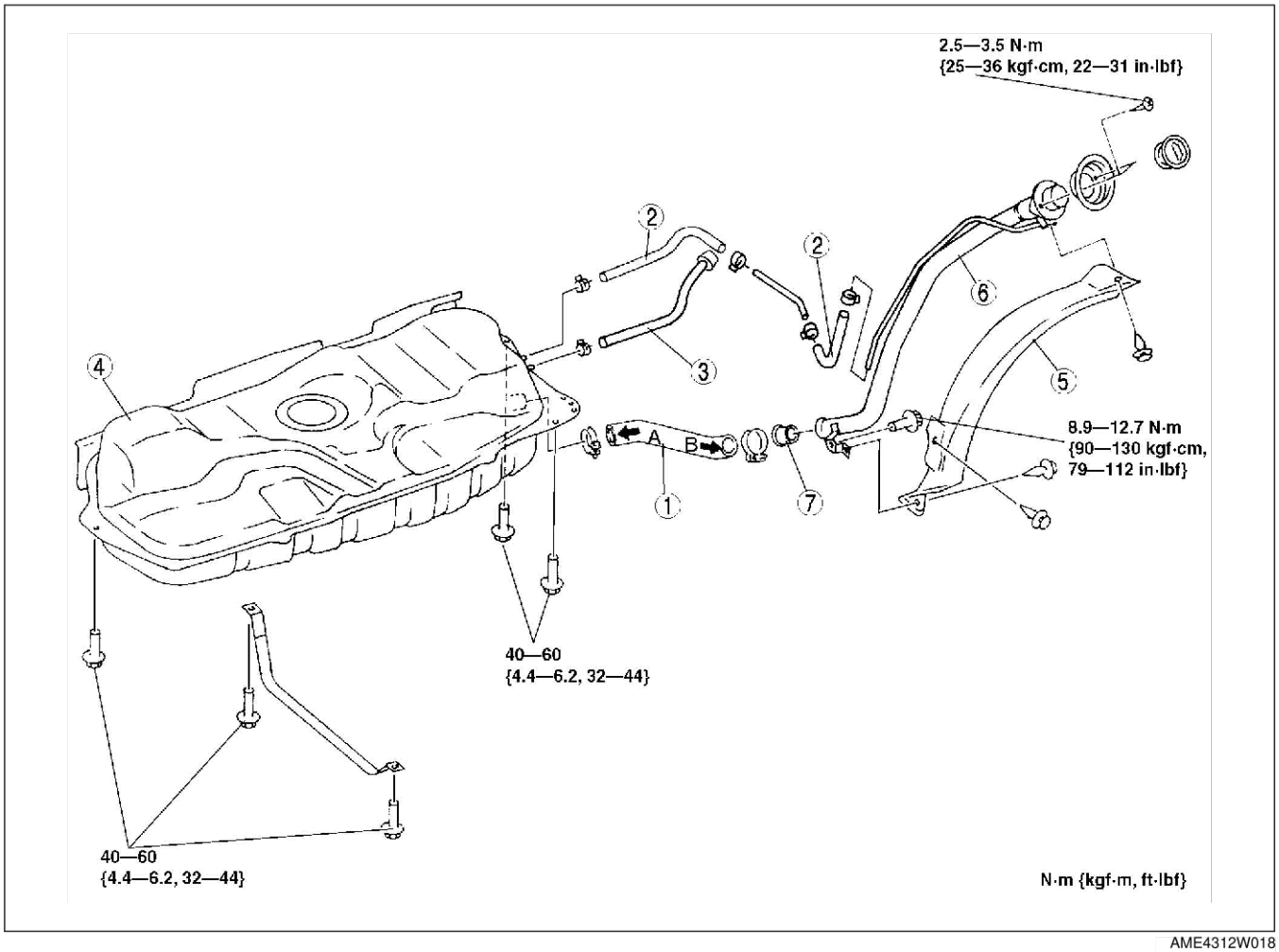

AME4312W018

1	Joint hose (See F5–77 Joint Hose Installation Note)
2	Breather hose (See F5–77 Breather Hose Installation Note)
3	Evaporative hose (See F5–77 Evaporative Hose Installation Note)

4	Fuel tank
5	Fuel-filler pipe protector
6	Fuel-filler pipe
7	Nonreturn valve

Evaporative Hose Installation Note

1. Fit evaporative hose onto the respective fittings, and install clamps as shown.

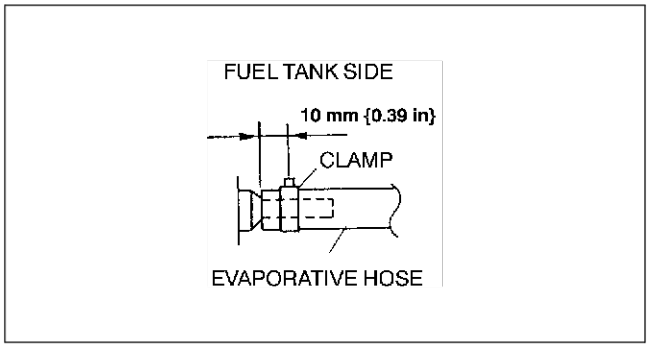

AME4312W019

Breather Hose Installation Note

1. Fit the breather hose onto the respective fittings, and install clamps as shown.

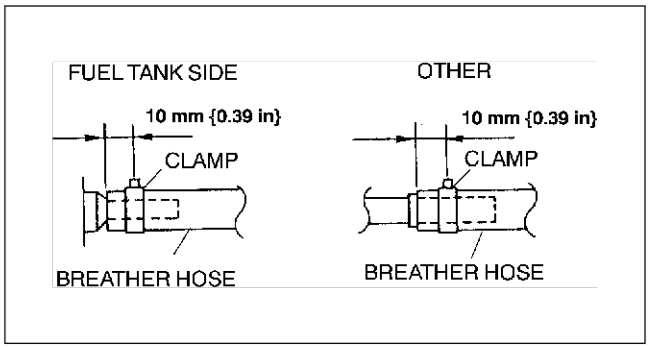

YMU114WAA

Joint Hose Installation Note

1. Fit the joint hose onto the respective fittings, and install clamps as shown.

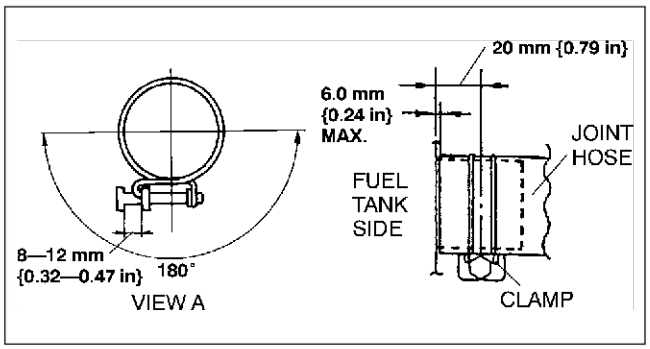

YMU114WAB

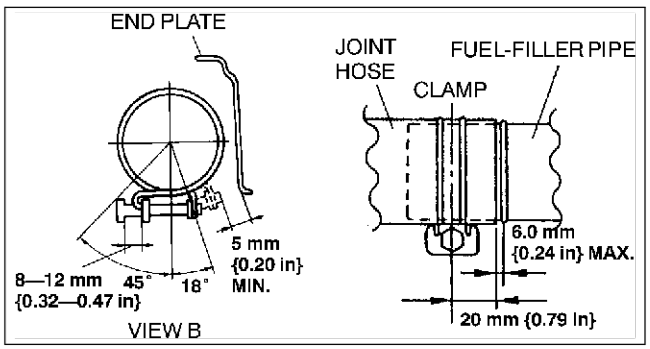

YMU114WAC

End Of Sta

FUEL TANK INSPECTION

AME431242110W02

Caution
- **Disconnecting/connecting the quick release connector without cleaning it may possibly cause damage to the fuel pipe and quick release connector. Always clean the quick release connector joint area before disconnecting/connecting using a cloth or soft brush, and make sure that it is free of foreign material.**

Note
- This inspection is for two rollover valves integrated in the fuel tank.

1. Disconnect the fuel hose and the fuel gauge sender unit connector.
2. Remove the fuel tank with the fuel pump unit. (See F5–76 FUEL TANK REMOVAL/INSTALLATION.)
3. Plug the fuel pipe of the fuel pump unit.
4. Plug port C.
5. Level the fuel tank.
6. Blow through port B and verify that there is airflow from port A.
   - If there is no airflow, replace the fuel tank.
   - If there is airflow, turn the fuel tank upside-down, and proceed to Step 7.

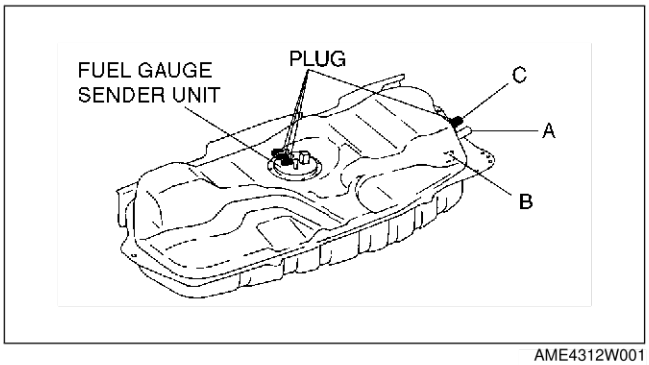

AME4312W001

7. Blow through port B and verify that there is no airflow from port A.
   - If there is airflow, replace the fuel tank.

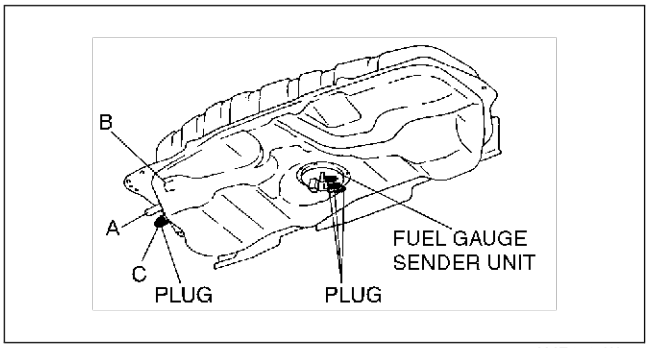

AME4312W002

End Of Sie

NONRETURN VALVE INSPECTION

AME431242270W01

1. Remove the nonreturn valve. (See F5–76 FUEL TANK REMOVAL/INSTALLATION.)
2. Verify that the nonreturn valve opens up to **90 degrees** when it is pushed from the fuel-filler pipe side, and it returns to the normal position by the spring force.
   - If the nonreturn valve does not open up to **90 degrees** or does not return to the normal position, replace the nonreturn valve.

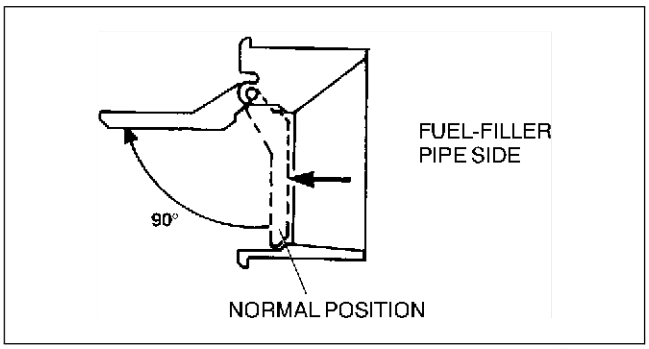

AME4312W034

End Of Sie

FUEL FILTER COMPONENT REMOVAL/INSTALLATION

AME431234802W01

1. Disconnect the negative battery cable.
2. Complete the “BEFORE REPAIR PROCEDURE”. (See F5–75 BEFORE REPAIR PROCEDURE.)
3. Remove in the order indicated in the table.

1	Connector
2	Installation nut
3	Fuel hose
4	Fuel filter body

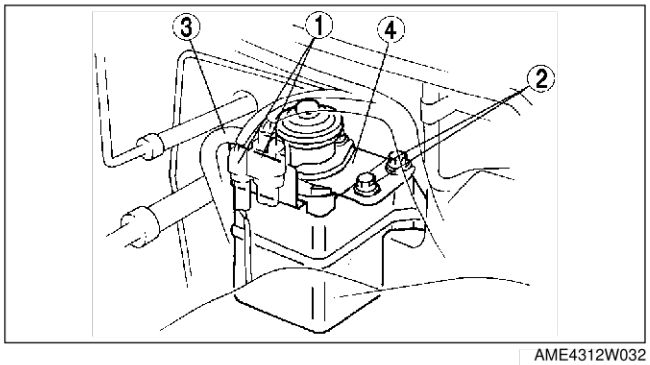

AME4312W032

4. Install in the reverse order of removal.
5. Complete the “AFTER REPAIR PROCEDURE”. (See F5–75 AFTER REPAIR PROCEDURE.)
6. Start the engine and verify that fuel does not leak from the fuel system.
   - If fuel leaks, reinstall the fuel filter.

End Of Ste

FUEL FILTER COMPONENT DISASSEMBLY/ASSEMBLY

AME431234802W02

1. Disconnect the negative battery cable.
2. Complete the “BEFORE REPAIR PROCEDURE”. (See F5–75 BEFORE REPAIR PROCEDURE.)
3. Remove in the order indicated in the table.

1	Connector
2	Fuel hose
3	Priming pump
4	Fuel filter (See F5–79 Fuel Filter Installation Note)
5	Sedimentor switch (See F5–79 Sedimentor Switch Installation Note)
6	Drain plug
7	Fuel warmer

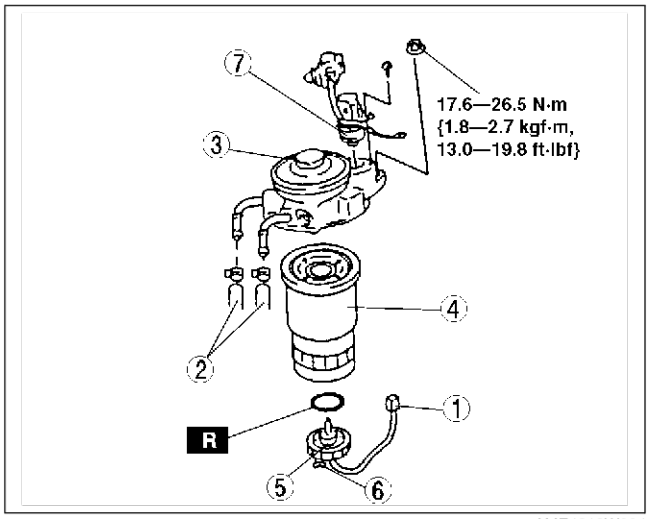

AME4312W004

4. Install in the reverse order of removal.
5. Complete the “AFTER REPAIR PROCEDURE”. (See F5–75 AFTER REPAIR PROCEDURE.)
6. Start the engine and verify that fuel does not leak from the fuel system.
   - If fuel leaks, reassemble the fuel filter.

Sedimentor Switch Installation Note

1. Apply a small amount of fuel to a new O-ring.
   - Tighten the sedimentor switch enough to the fuel filter by hand.

Fuel Filter Installation Note

1. Apply a small amount of fuel to the fuel filter O-ring.
2. Tighten the fuel filter **approx. 3/4** by hand after the O-ring contacts the priming pump.

End Of Ste

FUEL WARMER INSPECTION

AME431234802W03

For Cold Areas

1. Remove the fuel warmer. (See F5–79 FUEL FILTER COMPONENT DISASSEMBLY/ASSEMBLY.)
2. Verify that the resistance between terminal A and the fuel warmer body is within the specification when vacuum of **–31.3— –38.0 kPa {–235— –285 mmHg, –9.2— –11.2 inHg}** is applied to port A of the fuel warmer.
   - If as specified, inspect the following and carry out the “Circuit Open/Short Inspection”.
   - If not as specified, replace the fuel warmer.

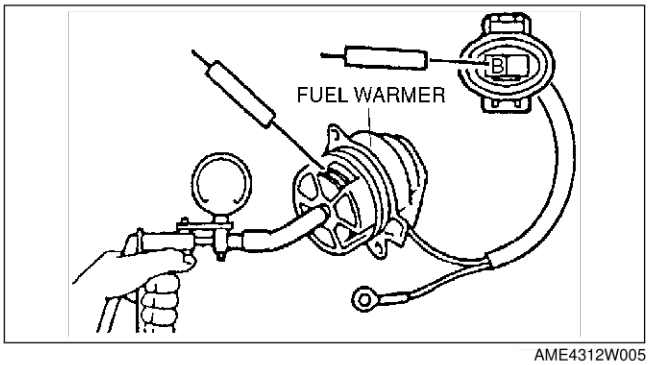

AME4312W005

Specification

Ambient temperature (°C {°F})	Resistance (ohms)
20 {68}	0.5—1.5

Circuit Open/Short Inspection

1. Inspect for open/short circuit in the following wiring harnesses.
   - If there is open/short circuit, repair or replace wiring harnesses.

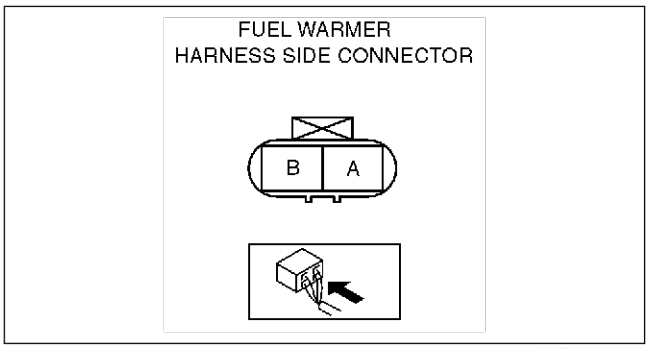

AME4312W033

Open circuit

- If there is no continuity, the circuit is open. Repair or replace the harness.
  - — Fuel warmer terminal A (harness-side) and GND
  - — Fuel warmer terminal B (harness-side) and power supply

Short circuit

- If there is continuity, the circuit is shorted. Repair or replace the harness.
  - — Fuel warmer terminal B (harness-side) and GND

End Of Sie

SEDIMENTOR WATER DRAINING

AME431234802W04

1. Disconnect the negative battery cable.
2. Complete the “BEFORE REPAIR PROCEDURE”. (See F5–75 BEFORE REPAIR PROCEDURE.)
3. Loosen the drain plug located at the bottom of the fuel filter.
4. Pump the priming pump and drain the water.
5. After all the water has been drained, tighten the drain plug.
6. Complete the “AFTER REPAIR PROCEDURE”. (See F5–75 AFTER REPAIR PROCEDURE.)
7. Reconnect the negative battery cable.

End Of Sie

SEDIMENTOR SWITCH INSPECTION

AME431213840W01

Note
- Perform the following test only when directed.

1. Disconnect the negative battery cable.
2. Complete the “BEFORE REPAIR PROCEDURE”. (See F5–75 BEFORE REPAIR PROCEDURE.)
3. Drain fuel from the fuel filter. (See F5–80 SEDIMENTOR WATER DRAINING.)
4. Remove the sedimentor switch.
5. Inspect for continuity of the sedimentor switch using an ohmmeter.
   - If as specified, inspect the following and carry out the “Circuit Open/Short Inspection.”
   - If not as specified, replace the sedimentor switch.

Specification

Float	Continuity
Up	Yes
Down	No

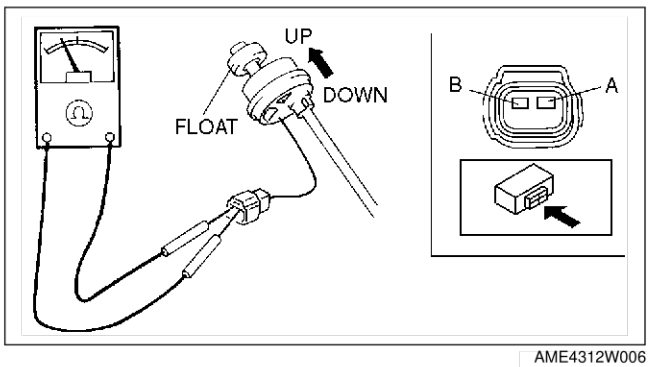

AME4312W006

6. Install the sedimentor switch.
7. Reconnect the negative battery cable.
8. Complete the “AFTER REPAIR PROCEDURE”. (See F5–75 AFTER REPAIR PROCEDURE.)

Circuit Open/Short Inspection

1. Inspect the following wiring harnesses for open or short (continuity check).

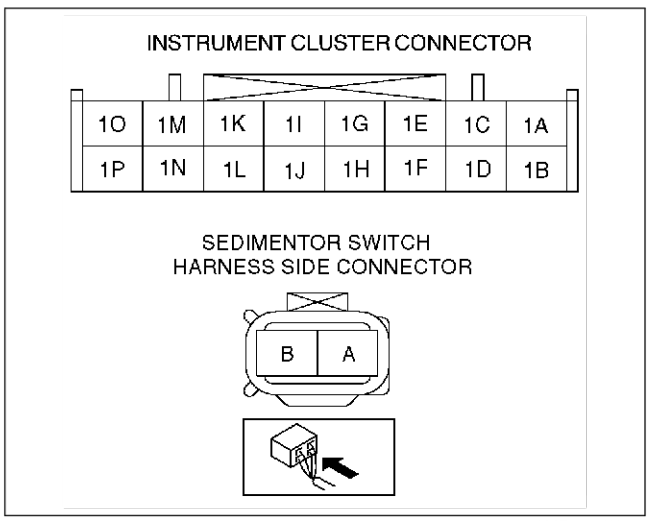

AME4312W008

Open circuit
- If there is no continuity, the circuit is open. Repair or replace the harness.
  - — Sedimentor switch terminal B (harness-side) and GND.
  - — Sedimentor switch terminal A (harness-side) and instrument cluster terminal 1H.

Short circuit
- If there is continuity, the circuit is shorted. Repair of replace the harness.
  - — Sedimentor switch terminal A (harness-side) and GND.
  - — Sedimentor switch terminal B (harness-side) and power supply.

End Of Ste

SUPPLY PUMP REMOVAL/INSTALLATION

AME431213350W02

Caution
- **Fuel line spills and leakage on the parts are dangerous. Fuel can ignite and also deteriorate the parts. To prevent this, always cover the mouths of the removed parts in the fuel system with rags to soak up the fuel.**
- **To prevent the fuel injection pipe from clogging, be careful that foreign material has not entered the pipe. Also, be sure to tighten the bolts with the specified tightening torque when installing the fuel injection pipe.**
- **To prevent fuel leakage, follow the procedure indicated in the workshop manual when removing and installing the fuel injector.**
- **The fuel injection pipe can be removed and reinstalled up to five times. Be sure to record in the service record when removing and installing the fuel injection pipe. If removing it for the sixth time, be sure to replace it with a new one.**

1. Disconnect the negative battery cable.
2. Complete the “BEFORE REPAIR PROCEDURE”. (See F5–75 BEFORE REPAIR PROCEDURE.)
3. Remove in the order indicated in the table.

1	Injection pipe
2	Nozzle seal
3	Return fuel hose
4	Common rail (See F5–82 Common Rail Installation Note)
5	Supply pump (See B4–24 Injection Pump Pulley Removal Note)

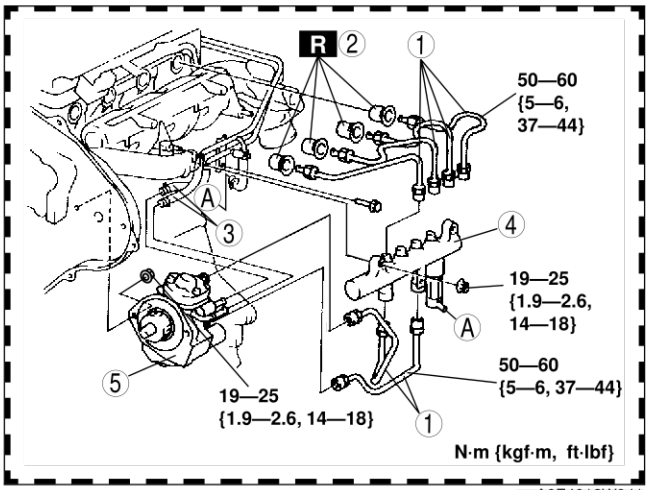

A6E4012W041

4. Install in the reverse order of removal.
5. Complete the “AFTER REPAIR PROCEDURE”. (See F5–75 AFTER REPAIR PROCEDURE.)

Common Rail Installation Note
1. Temporarily tighten the common rail.
2. Temporarily tighten the injection pipes.
3. Fully tighten the injector side injection pipes, then tighten the common rail side.

Tightening torque
50—60 N·m {5—6 kgf·m, 37—44 ft·lbf}

4. Fully tighten the supply pump side and common rail side injection pipes.

Tightening torque
50—60 N·m {5—6 kgf·m, 37—44 ft·lbf}

5. Fully tighten the common rail.

Tightening torque
20—30 N·m {2.0—3.1 kgf·m, 15—22 ft·lbf}

End Of Sec

SUPPLY PUMP INSPECTION

AME431213350W03

Caution
- **The supply pump is sealed to maintain proper function. Special tools and testers are required when disassembling the supply pump. Disassembling the supply pump without special tools and testers will cause a malfunction.**
- **Consult an authorized DENSO parts distributor for repair if any of the following supply pump parts are possibly malfunctioning.**

1. Supply pump inner parts.
2. Suction control valve.
3. Fuel temperature sensor.

SUCTION CONTROL VALVE INSPECTION

AME431213350W04

Caution

- **The supply pump is sealed to maintain proper function. Special tools and testers are required when disassembling the supply pump. Disassembling the supply pump without special tools and testers will cause a malfunction.**
- **Consult an authorized DENSO parts distributor for repair if suction control valve is possibly malfunctioning.**

Resistance Inspection

1. Disconnect the negative battery cable.
2. Disconnect the suction control valve connector.
3. Measure the resistance between the suction control valve terminals using an ohmmeter.
   - If not as specified, repair the supply pump. (See F5–82 SUPPLY PUMP INSPECTION.)
   - If as specified, carry out the “Circuit Open/ Short Inspection”.

Specification

Ambient temperature (°C {°F})	Resistance (ohms)
20 {68}	approx,10.6

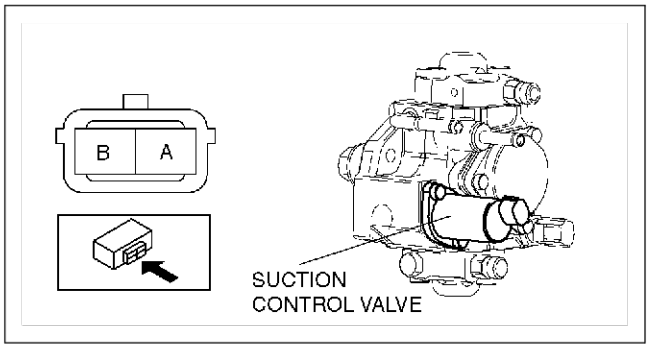

AME4312W021

Circuit Open/Short Inspection

1. Disconnect the PCM connector. (See F5–94 PCM REMOVAL/INSTALLATION.)
2. Inspect the following wiring harnesses for open or short (continuity check)

Open circuit

- If there is no continuity, the circuit is open. Repair of replace the harness.
  - — Suction control valve terminal A (harness-side) and PCM terminal 93
  - — Suction control valve terminal B (harness-side) and PCM terminal 94

Short circuit

- If there is continuity, the circuit is shorted. Repair or replace the harness.
  - — Suction control valve terminal A (harness-side) and power supply
  - — Suction control valve terminal A (harness-side) and GND
  - — Suction control valve terminal B (harness-side) and power supply
  - — Suction control valve terminal B (harness-side) and GND

End Of Sub

COMMON RAIL INSPECTION

AME431213015W03

Caution

- **Do not remove the fuel pressure sensor nor the fuel pressure limiter from the common rail. Since fuel pressure in the common rail is extremely high, the fuel pressure sensor, fuel pressure limiter, or the common rail can be damaged, leading to fuel leakage if any of them are removed.**

1. Visually inspect the common rail for damage and cracks. Also verify that there is no extreme rust which will cause fuel leakage.
   - If either is observed, replace the common rail.

End Of Sub

FUEL INJECTOR REMOVAL/INSTALLATION

AME431213250W02

Caution

- **Fuel line spills and leakage on the parts are dangerous. Fuel can ignite and also deteriorate the parts. To prevent this, always cover the mouths of the removed parts in the fuel system with rags to soak up the fuel.**
- **To prevent the fuel injection pipe from clogging, be careful that foreign material has not entered the pipe. Also, be sure to tighten the bolts with the specified tightening torque when installing the fuel injection pipe.**
- **To prevent fuel leakage, follow the procedure indicated in the workshop manual when removing and installing the fuel injector.**
- **The fuel injection pipe can be removed and reinstalled up to five times. Be sure to record in the service record when removing and installing the fuel injection pipe. If removing it for the sixth time, be sure to replace it with a new one.**

Note

- Perform “Correction after Parts Installation” after replacing fuel injector. (See F5–65 Correction after Parts Installation.)

1. Disconnect the negative battery cable.
2. Complete the “BEFORE REPAIR PROCEDURE”. (See F5–75 BEFORE REPAIR PROCEDURE.)
3. Remove in the order indicated in the table..

1	Injection pipe
2	Calibration register
3	Cylinder head cover
4	Nozzle seal
5	Side wall
6	Injector bracket
7	Fuel injector (See F5–84 Fuel Injector Installation Note)

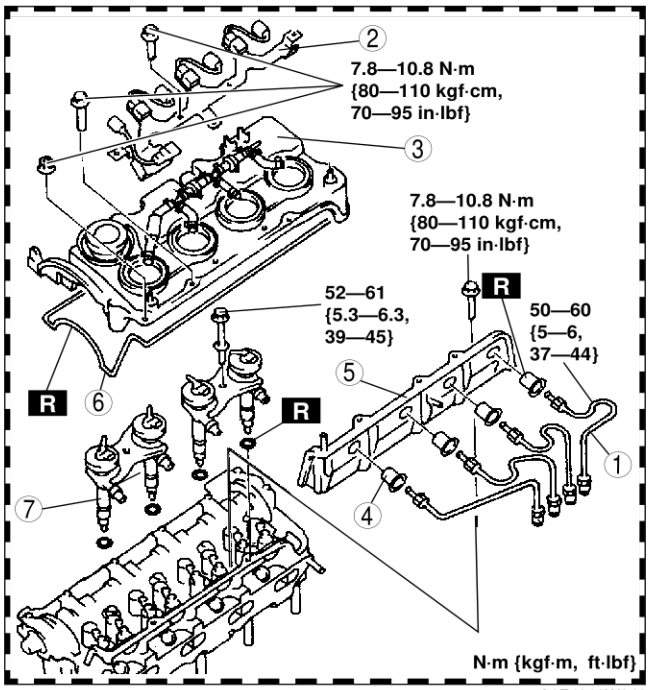

A6E4012W040

4. Install in the reverse order of removal.
5. Complete the “AFTER REPAIR PROCEDURE”. (See F5–75 AFTER REPAIR PROCEDURE.)

Fuel Injector Installation Note

1. Temporarily tighten the injector bracket.

   Tightening torque
   10—20 N·m {1.1—2.0 kgf·m, 7.4—14.8 ft·lbf}

2. Temporarily tighten the injection pipes.
3. Tighten the injector side injection pipes, then tighten the common rail side.

   Tightening torque
   50—60 N·m {5—6 kgf·m, 37—44 ft·lbf}

4. Fully tighten the injector bracket.

   Tightening torque
   52—62 N·m {5.3—6.3 kgf·m, 39—45 ft·lbf}

End Of Sec

FUEL INJECTOR INSPECTION

AME431213250W03

Resistance Inspection

Note
- Perform the following test only when directed.
- Perform “Correction after Parts Installation” after replacing the fuel injector. (See F5–65 Correction after Parts Installation.)

1. Disconnect the negative battery cable.
2. Disconnect the fuel injector connectors.
3. Measure the resistance of the fuel injector using an ohmmeter.
   - If not as specified, replace the fuel injector. (See F5–84 FUEL INJECTOR REMOVAL/INSTALLATION.)
   - If as specified, carry out the “Circuit Open/Short Inspection”.

Resistance
approx. 0.45 ohm

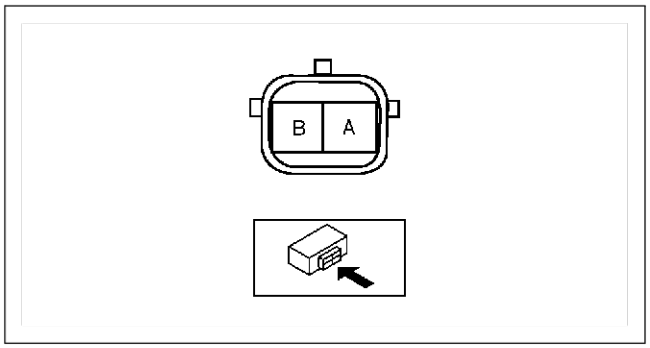

AME4312W030

Circuit Open/Short Inspection

1. Disconnect the IDM connector.
2. Inspect the following wiring harnesses for open or short (continuity check).

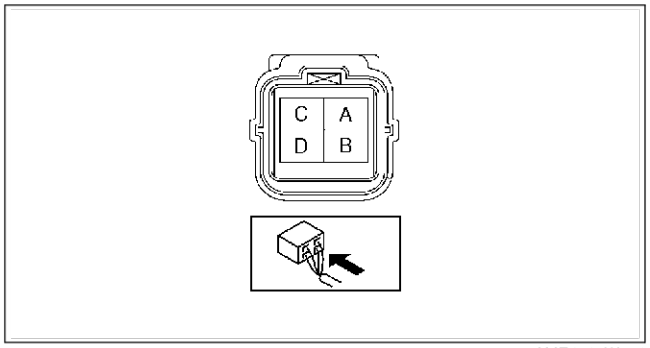

AME4312W031

Open circuit
- If there is no continuity, the circuit is open. Repair or replace the harness.
  - No.1 cylinder fuel injector terminal B (harness-side) and IDM terminal 1E.
  - No.2 cylinder fuel injector terminal B (harness-side) and IDM terminal 1G.
  - No.3 cylinder fuel injector terminal B (harness-side) and IDM terminal 1H.
  - No.4 cylinder fuel injector terminal B (harness-side) and IDM terminal 1F.
  - No.1 cylinder fuel injector terminal D (harness-side) and IDM terminal 1D.
  - No.2 cylinder fuel injector terminal D (harness-side) and IDM terminal 1C.
  - No.3 cylinder fuel injector terminal D (harness-side) and IDM terminal 1D.
  - No.4 cylinder fuel injector terminal D (harness-side) and IDM terminal 1C

Short circuit
- If there is continuity, the circuit is short. Repair or replace the harness.
  - No.1 cylinder fuel injector terminal B (harness-side) and GND.
  - No.2 cylinder fuel injector terminal B (harness-side) and GND.
  - No.3 cylinder fuel injector terminal B (harness-side) and GND.
  - No.4 cylinder fuel injector terminal B (harness-side) and GND.
  - No.1 cylinder fuel injector terminal D (harness-side) and power supply.
  - No.2 cylinder fuel injector terminal D (harness-side) and power supply.
  - No.3 cylinder fuel injector terminal D (harness-side) and power supply.
  - No.4 cylinder fuel injector terminal D (harness- side) and power supply.

End Of Sta

EXHAUST SYSTEM

EXHAUST SYSTEM INSPECTION

AME431440000W03

1. Start the engine and inspect each exhaust system component for exhaust gas leakage.
   - If leakage is found, repair or replace as necessary.

End Of Sub

EXHAUST SYSTEM REMOVAL/INSTALLATION

AME431440000W04

Warning

- **When the engine and exhaust system are hot, they can cause severe burns or injury. Turn off the engine and wait until they are cool before removing the exhaust system.**

1. Disconnect the negative battery cable.
2. Remove in the order indicated in the table.
3. Install in the reverse order of removal.

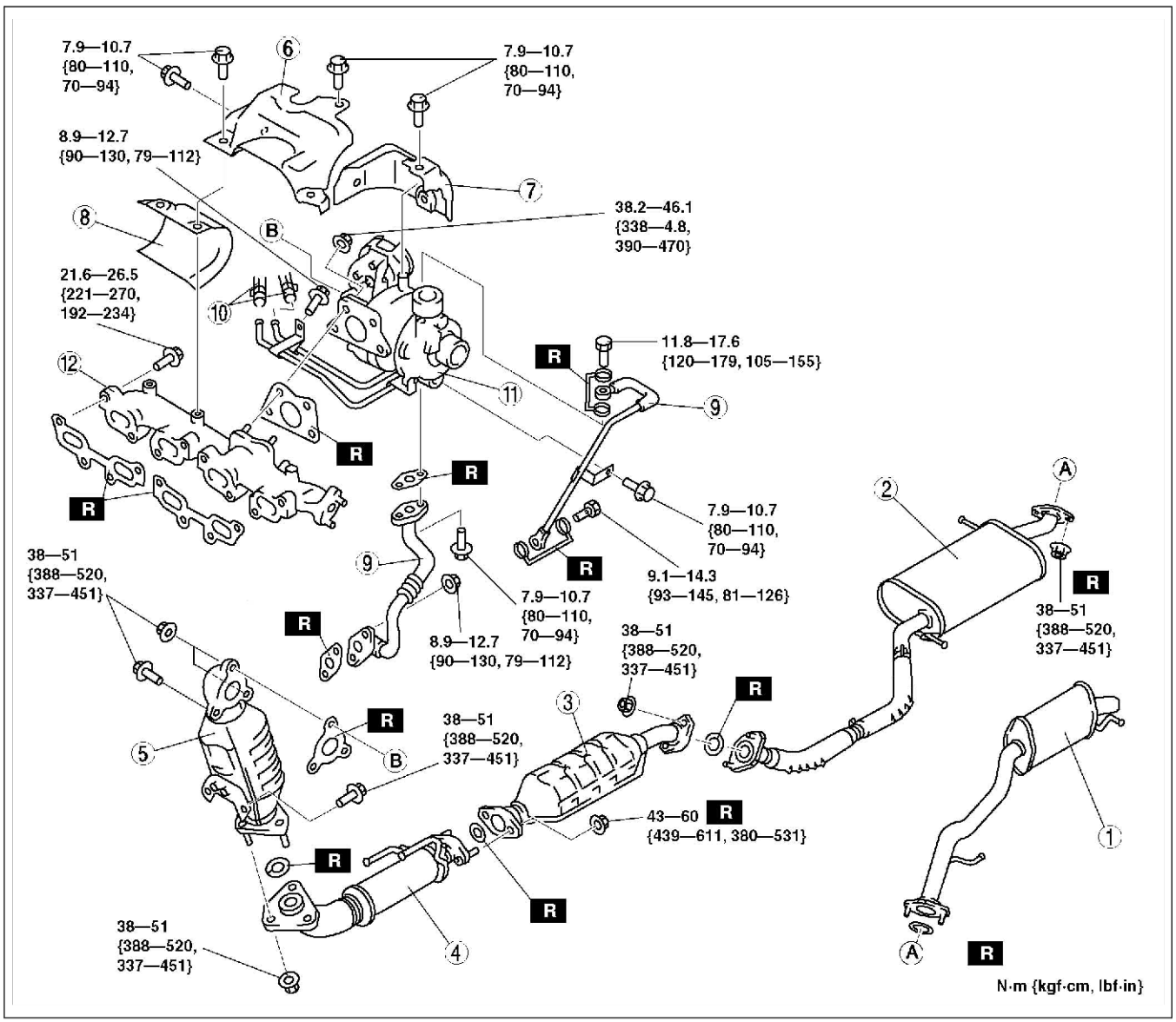

AME4314W002

1	After silencer
2	Main silencer
3	Oxidation catalytic converter
4	Flexible pipe
5	Warm up oxidation catalytic converter (See F5–87 Warm Up Oxidation Catalytic Converter Removal Note)
6	Turbocharger insulator No. 1
7	Turbocharger insulator No. 2

8	Exhaust manifold insulator
9	Oil pipe
10	Water hose (See F5–87 Water Hose Removal Note)
11	Turbocharger (See F5–87 Turbo Charger Removal Note)
12	Exhaust manifold (See F5–87 Exhaust Manifold Removal Note) (See F5–87 Exhaust Manifold Installation Note)

Warm Up Oxidation Catalytic Converter Removal Note

1. Remove the joint shaft before removing the warm up oxidation catalytic converter. (See M–9 JOINT SHAFT (MZR-CD (RF TURBO)) REMOVAL/INSTALLATION.)

Water Hose Removal Note

Drain the engine coolant. (See E–10 ENGINE COOLANT REPLACEMENT.)

Turbo Charger Removal Note

1. Remove the air pipe and the air hose before removing the turbocharger. (See F5–66 INTAKE-AIR SYSTEM REMOVAL/INSTALLATION.)

Exhaust Manifold Removal Note

1. Remove the EGR pipe before removing the exhaust manifold. (See F5–88 EGR VALVE REMOVAL/INSTALLATION.)

Exhaust Manifold Installation Note

1. Tighten the exhaust manifold installation nuts in the order shown.

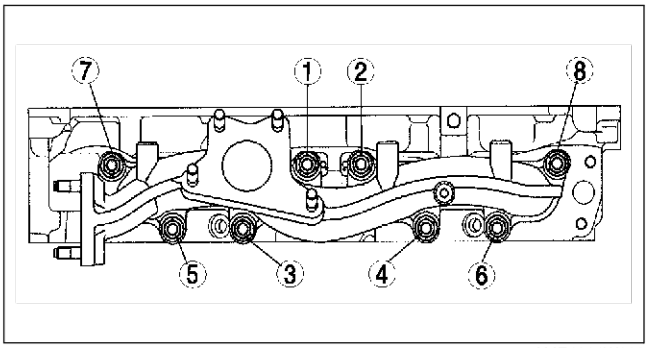

AME4314W003

End Of Ste

EMISSION SYSTEM

EGR VALVE REMOVAL/INSTALLATION

AME431620300W02

1. Disconnect the negative battery cable.
2. Remove the air cleaner. (See F5–66 INTAKE-AIR SYSTEM REMOVAL/INSTALLATION.)
3. Remove the common rail. (See F5–82 SUPPLY PUMP REMOVAL/INSTALLATION.)
4. Remove in the order indicated in the table.

1	Air pipe (See F5–66 INTAKE-AIR SYSTEM REMOVAL/INSTALLATION)
2	EGR pipe
3	EGR water cooler
4	EGR valve

5. Install in the reverse order of removal.

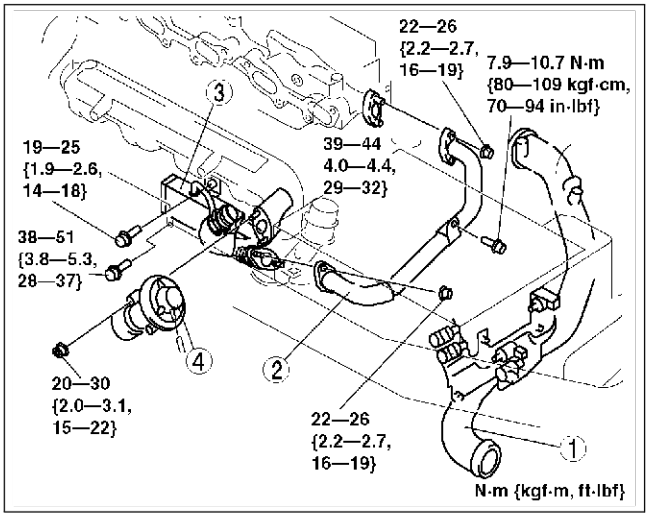

AME4316W023

End Of Se

EGR VALVE INSPECTION

AME431620300W01

Note
- Perform the following test only when directed.

1. Remove the EGR valve. (See F5–66 INTAKE-AIR SYSTEM REMOVAL/INSTALLATION.)
2. Inspect for airflow between 1 and 2 when vacuum is applied using a vacuum pump as shown in the figure.
   - If not as specified, replace the EGR valve.

Specification

Vacuum kPa {mmHg, inHg}	Airflow
Below –25.0— –41.6 {–188— –312,–7.4 — –12.3}	Yes
Except above	No

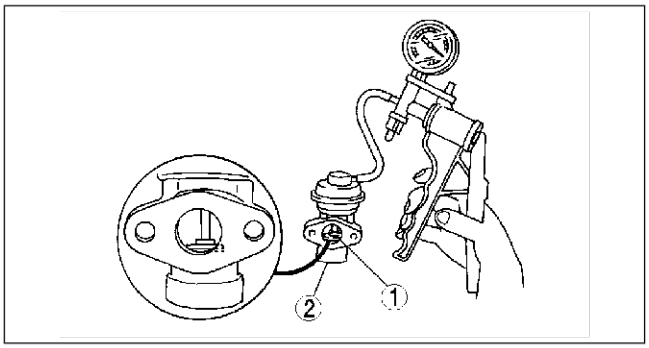

AME4316W001

End Of Se

EGR SOLENOID VALVE (VACUUM) INSPECTION

AME431618741W01

Note
- Perform the following inspection only when directed.

1. Inspect airflow between the ports under the following conditions.
   - If not as specified, replace the EGR solenoid valve (vacuum).
   - If as specified, carry out the “Circuit Open/ Short Inspection”.

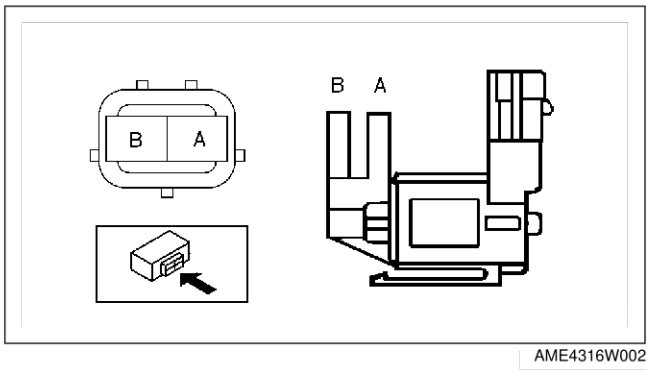

AME4316W002

: Airflow

Step	Terminal		Port	
	A	B	A	B
1				
2	B+	GND		

AME4316W003

Circuit Open/Short Inspection

1. Disconnect the PCM connector. (See F5–94 PCM REMOVAL/INSTALLATION.)
2. Inspect the following wiring harness for open or short (continuity check).

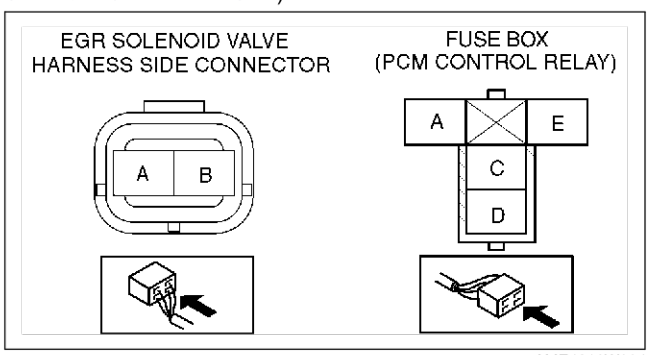

AME4316W004

Open circuit
- If there is no continuity, the circuit is open. Repair or replace the harness.
  - — EGR solenoid valve (vacuum) terminal A (harness-side) and PCM control relay terminal C (harness-side)
  - — EGR solenoid valve (vacuum) terminal B (harness-side) and PCM terminal 99

Short circuit
- If there is continuity, the circuit is shorted. Repair or replace the harness.
  - — EGR solenoid valve (vacuum) terminal A (harness-side) and GND
  - — EGR solenoid valve (vacuum) terminal B (harness-side) and power supply

End Of Sie

F5

EGR SOLENOID VALVE (VENT) INSPECTION

AME431618741W02

Note
- Perform the following inspection only when directed.

1. Inspect airflow between the ports under the following conditions.
   - If not as specified, replace the EGR solenoid valve.
   - If as specified, carry out the “Circuit Open/ Short Inspection”.

: Airflow

Step	Terminal		Port		
	A	B	A	B	C
1			○	○	○
2	B+	GND	○	○	

AME4316W005

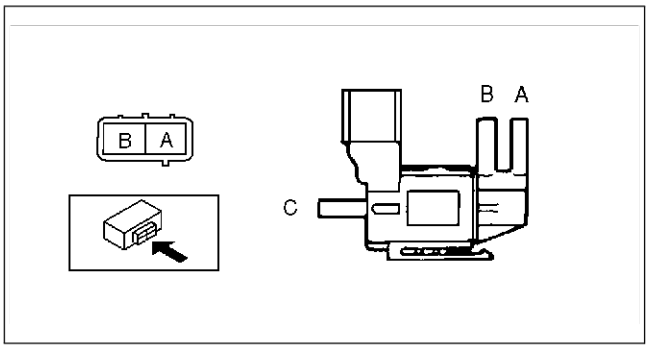

AME4316W006

Circuit open/Short Inspection

1. Disconnect the PCM connector. (See F5–94 PCM REMOVAL/INSTALLATION.)
2. Inspect the following wiring harness for open or short (continuity check).

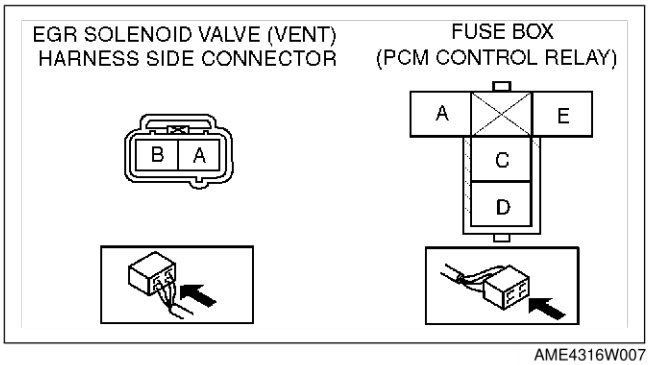

AME4316W007

Open circuit
- If there is no continuity, the circuit is open, Repair or replace the harness.
  - — EGR solenoid valve (vent) terminal A (harness-side) and PCM control relay terminal C (harness-side)
  - — EGR solenoid valve (vent) terminal B (harness-side) and PCM terminal 72

Short circuit
- If there is continuity, the circuit is shorted. Repair or replace the harness.
  - — EGR solenoid valve (vent) terminal A (harness-side) and GND
  - — EGR solenoid valve (vent) terminal B (harness-side) and power supply

End Of Sie

EGR CONTROL SOLENOID VALVE INSPECTION

AME431618741W03

Note
- Perform the following inspection only when directed.

1. Remove the EGR control solenoid valve.
2. Inspect airflow between the ports under the following conditions.
   - If not as specified, replace the EGR control solenoid valve.
   - If as specified, carry out the “Circuit Open/ Short Inspection”.

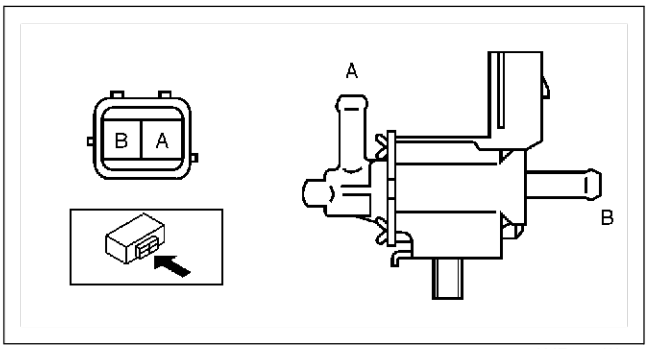

AME4316W009

: Airflow

Step	Terminal		Port	
	A	B	A	B
1			○—○	
2	B+	GND		

AME4316W010

Circuit Open/Short inspection

1. Disconnect the PCM connector. (See F5–94 PCM REMOVAL/INSTALLATION.)
2. Inspect the following wiring harness for open or short (continuity check).

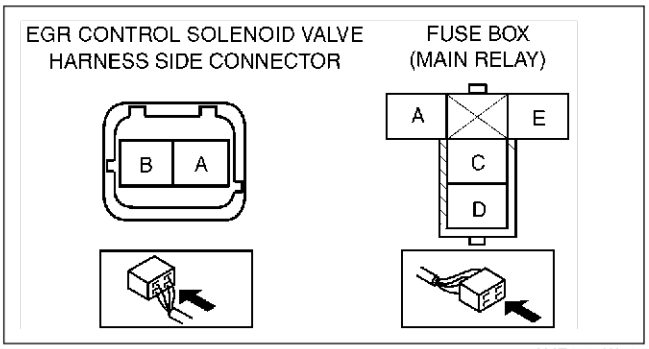

AME4316W011

Open circuit

- If there is no continuity, the circuit is open. Repair or replace the harness.
  - — EGR control solenoid valve terminal A (harness-side) and PCM control relay terminal C (harness-side)
  - — EGR control solenoid valve terminal B (harness-side) and PCM terminal 77

Short circuit

- If there is continuity, the circuit is shorted. Repair or replace the harness.
  - — EGR control solenoid valve terminal A (harness-side) and GND
  - — EGR control solenoid valve terminal B (harness-side) and power supply

End Of Sto

INTAKE SHUTTER VALVE ACTUATOR INSPECTION

AME431620100W01

1. Disconnect the vacuum hose from the intake shutter valve actuator.
2. Connect a vacuum pump to port A.
3. Apply vacuum and verify that the rod moves.
   - If the rod does not move, replace the intake manifold.

Specification

Vacuum kPa {mmHg, inHg}	Rod movement
Below –20 {–150, –5.9}	Starts to move
Above –66 {–495, –19}	Fully pulled

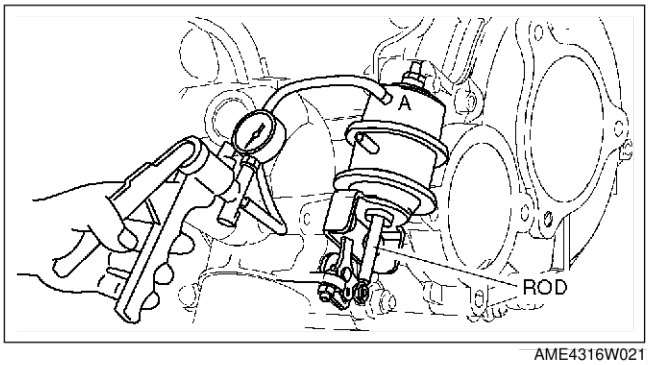

AME4316W021

4. Connect a vacuum pump to port A and B.
5. Apply vacuum and verify that the rod moves.
   - If the rod does not move, replace the intake manifold.

Specification

Vacuum kPa {mmHg, inHg}	Rod movement
Above –69.4 {–520, –21}	Fully pulled

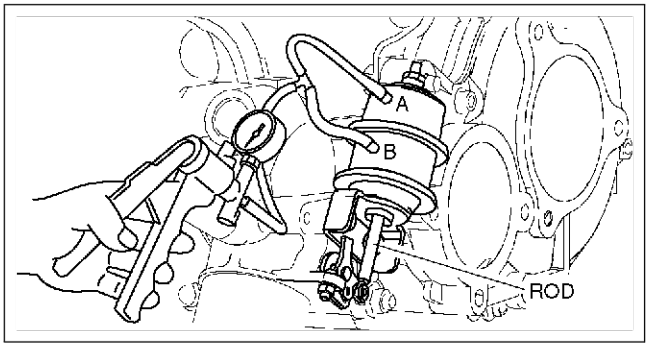

AME4316W022

End Of Sie

INTAKE SHUTTER SOLENOID VALVE INSPECTION

AME431613937W06

Note
- Perform the following inspection only when directed.
- The inspection includes both intake shutter solenoid valve (half) and intake shutter solenoid valve (full).

1. Inspect airflow between the ports under the following conditions.
   - If not as specified, replace the intake shutter solenoid valve.
   - If as specified, carry out the “Circuit open/ Short Inspection”.

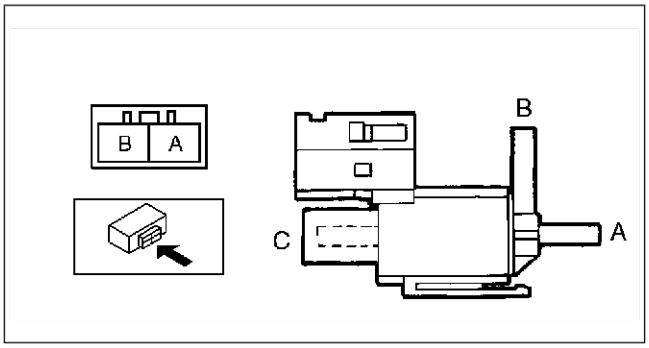

AME4316W012

○—○ : Airflow

Step	Terminal		Port		
	A	B	A	B	C
1				○—○	○—○
2	B+	GND	○—○	○—○	

YTA4114W105

Intake Shutter Solenoid Valve (Half) Circuit Open/Short Inspection

1. Disconnect the PCM connector. (See F5–94 PCM REMOVAL/INSTALLATION.)
2. Inspect the following wiring harness for open or short (continuity check).

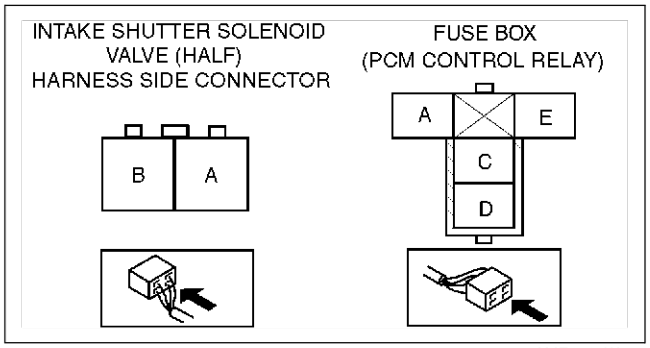

AME4316W013

Open circuit

- If there is no continuiry, the circuit is open. Repair or replace the harness.
  - — Intake shutter solenoid valve (half) terminal A (harness-side) and PCM control relay terminal C (harness-side)
  - — Intake shutter solenoid valve (half) terminal B (harness-side) and PCM terminal 74

Short circuit

- If there is continuity, the circuit is shorted. Repair or replace the harness.
  - — Intake shutter solenoid valve (half) terminal A (harness-side) and GND
  - — Intake shutter solenoid valve (half) terminal B (harness-side) and power supply

Intake Shutter Solenoid Valve (Full) Circuit Open/Short Inspection

1. Disconnect the PCM connector. (See F5–94 PCM REMOVAL/INSTALLATION.)
2. Inspect the following wiring harness for open or short (continuity check).

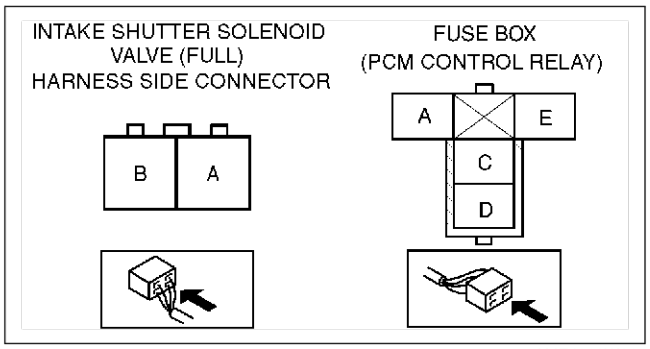

AME4316W017

Open circuit

- If there is no continuiry, the circuit is open. Repair or replace the harness.
  - — Intake shutter solenoid valve (full) terminal A (harness-side) and PCM control relay terminal C (harness-side)
  - — Intake shutter solenoid valve (full) terminal B (harness-side) and PCM terminal 100

Short circuit

- If there is continuity, the circuit is shorted. Repair or replace the harness.
  - — Intake shutter solenoid valve (full) terminal A (harness-side) and GND
  - — Intake shutter solenoid valve (full) terminal B (harness-side) and power supply

End Of Ste

CONTROL SYSTEM

PCM REMOVAL/INSTALLATION

AME434018881W06

Note
- Perform “Correction after Parts Installation” after replacing the PCM. (See F5–65 Correction after Parts Installation.)

European (L.H.D.) Specs.
1. Disconnect the negative battery cable.
2. Remove the glove compartment.
3. Remove the air duct.
4. Remove in the order indicated in the table.

1	PCM panel
2	PCM connector
3	PCM

5. Install in the reverse order of removal.

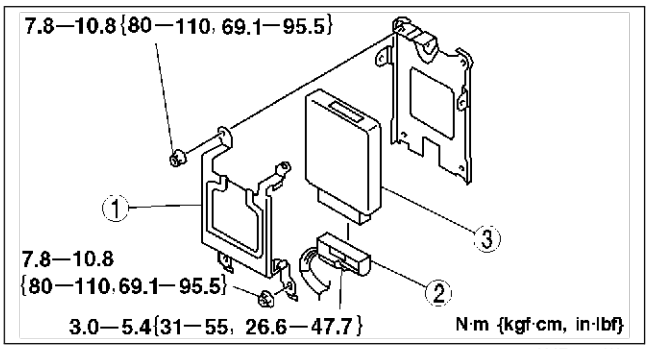

AME4340W067

U.K. Specs.
1. Disconnect the negative battery cable.
2. Remove the glove compartment.
3. Remove the air duct.
4. Remove in the order indicated in the table.

1	Set nut (See F5–94 Set nut/bolt removal note) (See F5–95 Set nut/bolt installation note)
2	Nut
3	PCM connector
4	Set bolt (See F5–94 Set nut/bolt removal note) (See F5–95 Set nut/bolt installation note)
5	PCM cover
6	PCM

5. Install in the reverse order of removal.

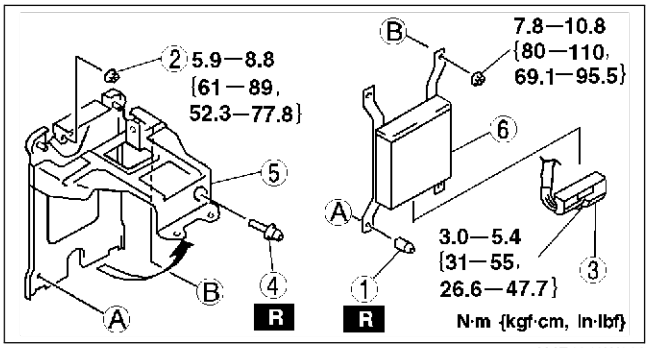

AME4340W068

Set nut/bolt removal note
1. Using a chisel and a hammer, cut a groove on the head of the set nut/bolt so that a screwdriver can be inserted.
2. Loose the set nut/bolt using an impact screwdriver or pliers.

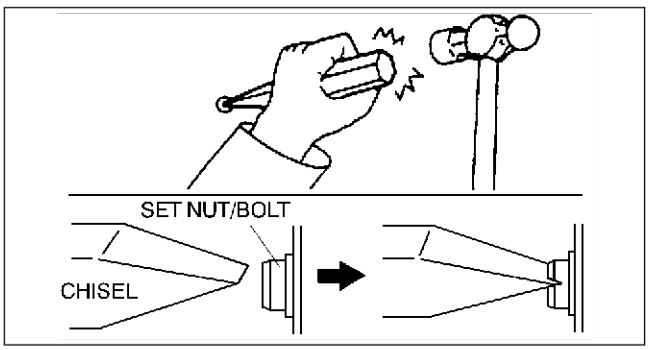

AME4340W070

Set nut/bolt installation note

1. Install a new set nut/bolt and tighten it until the neck of the nut/bolt is cut.

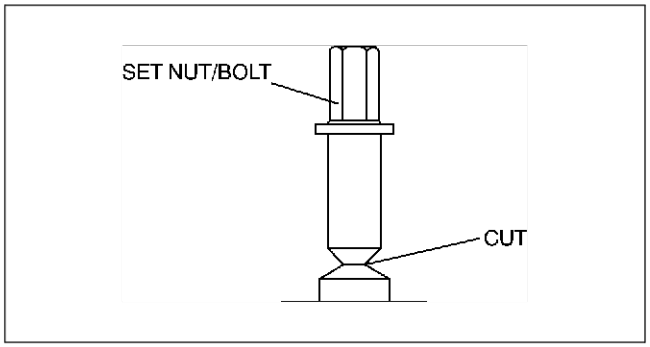

AME4340W069

End Of Sie

PCM INSPECTION

AME434018881W07

Using WDS or Equivalent

Caution

- **The PCM terminal voltages vary with change in measuring conditions and vehicle conditions. Always carry out a total inspection of the input systems, output systems, and PCM to determine the cause of trouble. Otherwise, diagnosis will be incorrect.**

Note

- Perform “Correction after Parts Installation” after replacing the PCM. (See F5–65 Correction after Parts Installation.)

F5

1. Connect the WDS or equivalent to the DLC-2. (See F5–115 ON-BOARD DIAGNOSTIC TEST.)
2. Turn the engine switch to ON.
3. Measure the PID value.
   - If PID value is not within the specification, follow the instructions in ACTION column.

PID Monitor Table

Monitor item (Definition)	Unit/ Condition		Condition/Specification (Reference)	Action	PCM terminal
ACCS (A/C relay)	ON/OFF		• A/C operating: ON • Engine switch is on: OFF	Inspect A/C relay. (See T–28 RELAY INSPECTION)	73
ACSW (A/C switch)	ON/OFF		• A/C switch is on: ON • A/C switch is off: OFF	Inspect A/C switch.	84
BARO (BARO)	kPa	inHg	• Elevation 0—400 m {0—1310 ft}: 100—103 kPa {29.5—30.4 inHg}	Replace PCM. (See F5–94 PCM REMOVAL/INSTALLATION)	–
BARO (BARO signal voltage)	V		• Elevation 0—400 m {0—1310 ft}: approx. 4.0 V		
BOO (Brake switch)	ON/OFF		• Brake pedal depressed: ON • Brake pedal released: OFF	Inspect brake switch.	7
CPP (Clutch switch)	ON/OFF		• Clutch pedal depressed: ON • Clutch pedal released: OFF	Inspect clutch switch. (See F5–98 CLUTCH SWITCH INSPECTION)	33
CPP/PNP (neutral switch)	Neutral/Drive		• Gear is neutral position: Neutral • Gear is not neutral position: Drive	Inspect neutral switch. (See F5–99 NEUTRAL SWITCH INSPECTION)	56
DTCCNT (DTC count)	–		• Number of output DTC	Follow DTC inspection. (See F5–117 DTC TABLE)	–
ECT (ECT)	°C	°F	• ECT is 20°C {68°F}: 20°C {68°F} • ECT is 85°C {185°F}: 85°C {185°F}	Inspect ECT sensor. (See F5–106 ENGINE COOLANT TEMPERATURE (ECT) SENSOR INSPECTION)	87
ECT (ECT signal voltage)	V		• ECT is 20°C {68°F}: 3.0—3.2 V • ECT is 85°C {185°F}: 0.7—0.9 V		
FAN_DUTY (Variable fan duty cycle)	%		• ECT is less than 100°C {212°F}: 0% • ECT is above 100°C {212°F}: 30—90%	Inspect fan control module.	22

Monitor item (Definition)	Unit/ Condition		Condition/Specification (Reference)	Action	PCM terminal
IAT (IAT)	°C	°F	• IAT is 20°C {68°F}: 20°C {68°F} • IAT is 30°C {86°F}: 30°C {86°F}	Inspect IAT sensor No.1. (See F5–104 MASS AIR FLOW (MAF)/INTAKE AIR TEMPERATURE (IAT) SENSOR INSPECTION)	60
IAT (IAT signal voltage)	V		• IAT is 20°C {68°F}: 2.2—2.5 V • IAT is 30°C {86°F}: 1.7—1.9 V		
IMRC (VSC solenoid valve)	ON/OFF		• Idle: ON • Engine speed is above approx. 2,500 rpm: OFF	Inspect following PIDs: BARO, ECT, IAT, RPM, VSS	101
INGEAR (In gear)	ON/OFF		• Gear is not neutral position and clutch pedal released: ON • Gear is neutral position: OFF • Clutch pedal depressed: OFF	Inspect following PIDs: CPP, CPP/PNP	33, 56
MAF (Mass air flow amount)	g/s		• Engine switch is on: approx. 0 g/s • Idle: 1.4—2.0 g/s	Inspect MAF/IAT sensor. (See F5–104 MASS AIR FLOW (MAF)/INTAKE AIR TEMPERATURE (IAT) SENSOR INSPECTION)	9
MAF (Mass air flow signal voltage)	V		• Engine switch is on: 0.0—1.0 V • Idle: 1.5—2.1 V		
MAINRLY (PCM control relay)	ON/OFF		• Engine switch is on: ON	Inspect PCM control relay. (See T–28 RELAY INSPECTION)	69
MAP (MAP)	kPa	inHg	• Engine switch is on: 100—103 kPa {29.5—30.4 inHg} • Idle: 100—103 kPa {29.5—30.4 inHg}	Inspect boost sensor. (See F5–108 BOOST SENSOR INSPECTION)	36
MAP (MAP signal voltage)	V		• Engine switch is on: 2.5—2.8 V • Idle: 2.5—2.8 V		
MIL (MIL)	ON/OFF		• Engine switch is on: ON • DTC output: ON • Others: OFF	Inspect MIL.	71
RPM (Engine speed)	rpm		• Idle: 725—825 rpm	Inspect CKP sensor. (See F5–110 CAMSHAFT POSITION (CMP) SENSOR INSPECTION)	3, 29
VPWR (Battery positive voltage)	V		• Engine switch is ON: B+	Inspect Battery. (See G–10 BATTERY INSPECTION)	27
VSS (Vehicle speed)	km/h	mph	• Vehicle speed is 20 km/h {12.5 mph}: 20 km/h {12.5 mph} • Vehicle speed is 40 km/h {25 mph}: 40 km/h {25 mph}	Inspect VSS.	6

Not Using WDS or Equivalent
Constant voltage terminal inspection

1. Turn the engine switch to ON.
2. Measure the voltage between the accelerator position sensor terminal A (vehicle side) and body GND using a voltmeter.
   (1) Measurement voltage is **below 1.0 V**.
      1) Turn the engine switch to OFF.
      2) Disconnect the accelerator position sensor connector.
      3) Verify there is no continuity between the accelerator position sensor terminal A (vehicle side) and body GND using an ohmmeter.
         • If there is continuity, repair or replace the related harness.

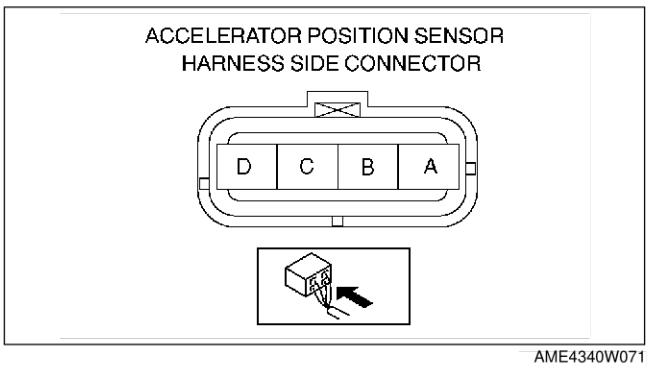

AME4340W071

      4) Inspect for continuity between the PCM terminal 90 (vehicle side) and accelerator position sensor terminal A (vehicle side) using an ohmmeter.
         • If there is no continuity, repair or replace the related harness.

(2) Measurement voltage is **B+**.
   1) Turn the engine switch to OFF.
   2) Disconnect the battery negative cable and battery positive cable.
   3) Verify there is no continuity between the accelerator position sensor terminal A (vehicle side) and battery positive cable using an ohmmeter.
      • If there is continuity, repair or replace the related harness.
(3) Measurement voltage is **approx. 5 V**.
   • Constant voltage terminal of PCM is okay.

GND terminal inspection
1. Turn the engine switch to OFF.
2. Disconnect the PCM connector.
3. Inspect for continuity between the PCM GND terminals and body GND using an ohmmeter.
   • If there is no continuity, repair or replace the related harness.

PCM GND terminal
65
85
103
104

Power supply terminal inspection
1. Turn the engine switch to ON.
2. Disconnect the PCM connector.
3. Measure the voltage between the PCM battery power terminals and body GND using a voltmeter.
   • If not as specified, repair or replace the related harness.

Specification
B+

PCM power supply terminal
27

Serial communication terminal inspection
1. Turn the engine switch to OFF.
2. Disconnect the PCM connector.
3. Verify there is continuity between the PCM terminal 2 and DLC KLN terminal.
   • If no continuity, repair or replace the related harness.

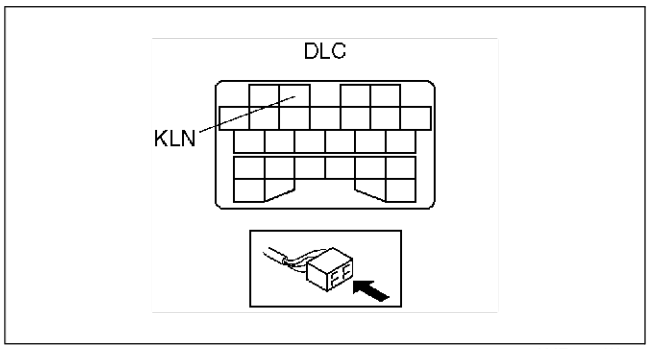

AME4340W066

End Of Sie

CLUTCH SWITCH INSPECTION

AME434018660W09

Note
- Perform the following test only when directed.

Continuity Inspection

1. Inspect continuity between the clutch switch terminals using an ohmmeter.
   - If the clutch switch is okay, but the CPP PID is out of specification, perform the “Circuit Open/Short Inspection”
   - If not as specified, replace the clutch switch.

Specification

O—O : Continuity

Condition	Clutch pedal	Terminal	
		C	E
Rod pushed	Released		
Except above	Depressed	O	O

AME4340W001

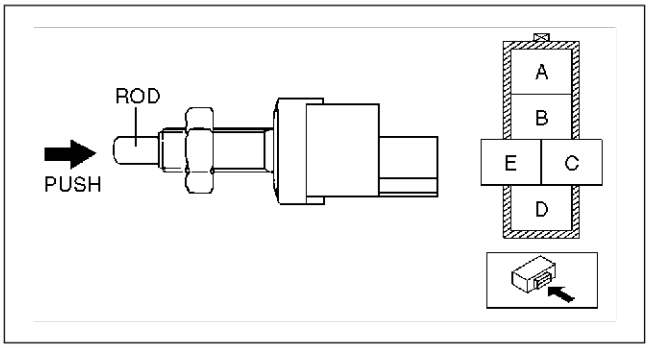

AME4340W004

Circuit Open/Short Inspection

1. Inspect for open/short circuit in the following wiring harnesses.
   - If there is open/short circuit, repair or replace wiring harnesses.

Open circuit
- Signal circuit
  — Clutch switch terminal C and PCM terminal 33
- GND circuit
  — Clutch switch terminal E and GND

Short circuit
- Signal circuit
  — Clutch switch terminal C and PCM terminal 33 to GND.

End Of Ste

NEUTRAL SWITCH INSPECTION

AME434017640W07

Note
- Perform the following test only when directed.

Continuity Inspection
1. Inspect for continuity between the neutral switch terminals using an ohmmeter.
   - If the neutral switch is okay, but the CPP/PNP PID is out of specification, perform the “Circuit Open/Short Inspection”
   - If not as specified, replace the neutral switch.

Specification

○—○ : Continuity

Condition	Transmission	Terminal	
		A	B
Rod pushed	In neutral	○	○
Except above	Other		

AME4340W072

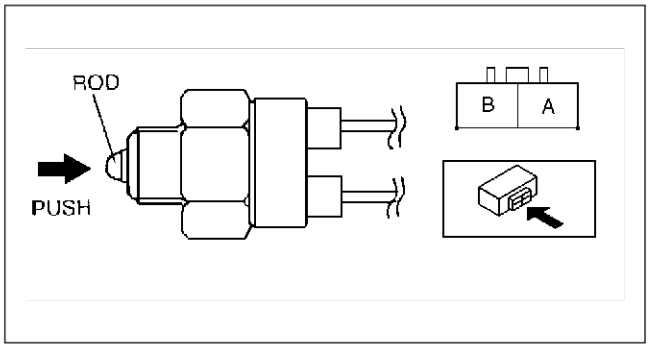

AME4340W005

Circuit Open/Short Inspection
1. Inspect for open/short circuit in the following wiring harnesses.
   - If there is open/short circuit, repair or replace wiring harnesses.

Open circuit
- Signal circuit
  — Neutral switch terminal A and PCM terminal 56
- GND circuit
  — Neutral switch terminal B and GND

Short circuit
- Signal circuit
  — Neutral switch terminal A and PCM terminal 56 to GND

End Of Step

F5

IDLE SWITCH INSPECTION

AME434041600W02

Note
- Perform the following test only when directed.

1. Verify that the accelerator position sensor is normal.
2. Visually inspect all accelerator pedal components for looseness.
3. Verify that the idle switch is installed to the accelerator pedal properly.
4. Verify that the power circuit voltage.
   (1) Verify that the voltage between the PCM terminals 90 (power circuit) and 91(GND circuit) is **4.75—5.25 V**.

Note
- Voltage at the PCM terminal 10 may deviate when the power circuit voltage is abnormal.

5. Verify that the voltage at the PCM terminal 31 (idle signal) is 1 V or less with the accelerator pedal fully released.
6. Depress the accelerator pedal gradually and hold the pedal when the PCM terminal 31 voltage changes to approximately **10 V**.
7. Verify that the voltage between the PCM terminals 10 (accelerator position detection signal) and 91 is within the specification.
   - If the circuit is okay, replace the idle switch.

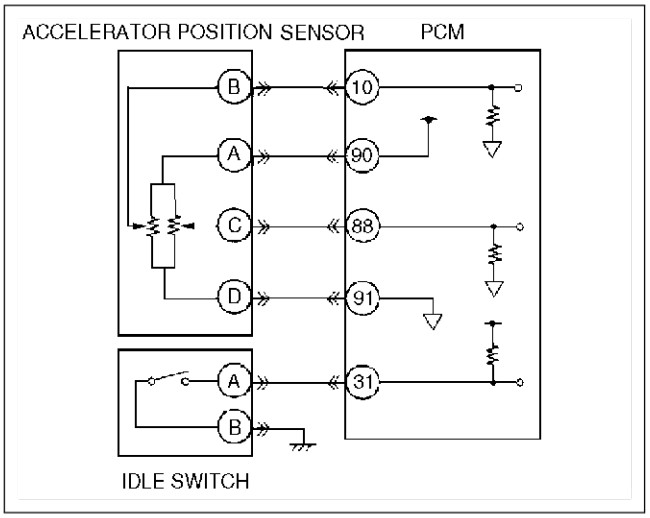

AME4340W032

Specification
1.0—1.2 V (Target value: 1.1 V)

Circuit Open/Short Inspection

1. Inspect for open/short circuit in the following wiring harnesses.
   - If there is open/short circuit, repair or replace wiring harnesses.

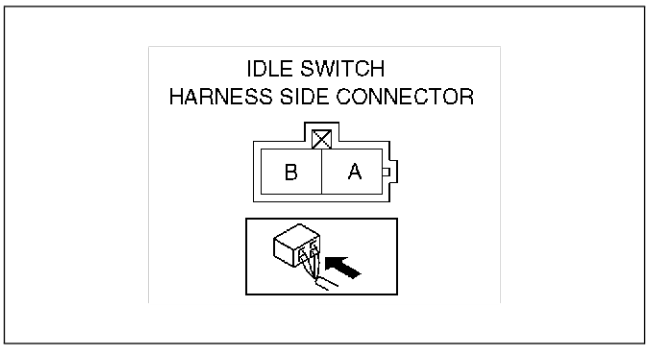

AME4340W039

Open circuit
- Signal circuit
  — Idle switch terminal A and PCM terminal 31
- GND circuit
  — Idle switch terminal B and GND

Short circuit
- Signal circuit
  — Idle switch terminal A and PCM terminal 31 to GND

End Of Sec

IDLE SWITCH ADJUSTMENT

AME434041600W03

Caution
- **Adjusting the idle switch unnecessarily may adversely affect engine control. Therefore, adjust the idle switch only when it is replaced.**

1. Verify that the accelerator position sensor is normal.
2. Visually inspect all accelerator pedal components for looseness.
3. Loosen the locknut that secures the idle switch.
4. Verify that the power circuit voltage.
   (1) Verify that the voltage between the PCM terminals 90 (power circuit) and 91(GND circuit) is **4.75—5.25 V**.

Note
- Voltage at the PCM terminal 10 may deviate when the power circuit voltage is abnormal.

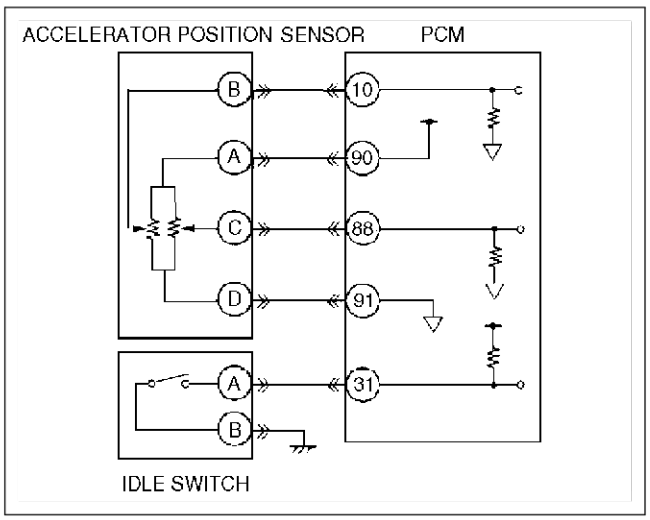

AME4340W032

5. Depress the accelerator pedal by hand and secure it when the voltage between the PCM terminals 10 (accelerator position detection signal) and 91 is within the range specified below.

Voltage range
1.0—1.2V (Target value: 1.1 V)

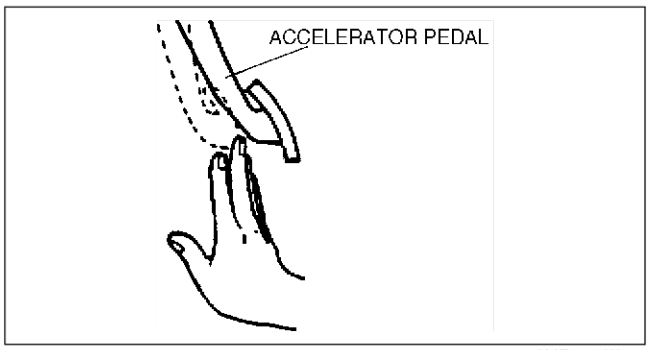

AME4340W073

6. Turn the idle switch under the condition in Step 5. Secure the idle switch when the continuity turns from OFF to ON, and tighten the locknut.
7. Release the accelerator pedal. Depress the accelerator pedal again and verify that the idle switch continuity changes from OFF to ON when the PCM terminal 10 voltage is within **1.0—1.2 V**.
   - If the continuity does not change, repeat Step 6.

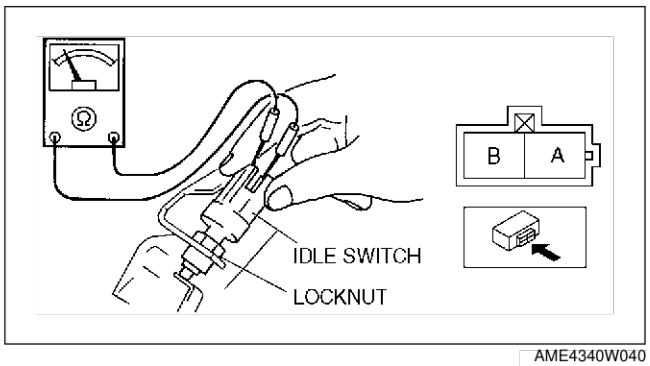

AME4340W040

End Of Sta

ACCELERATOR POSITION SENSOR INSPECTION

AME434041602W06

Note
- Perform the following test only when directed.

1. Visually inspect all accelerator pedal components for looseness.
2. Verify that the accelerator position sensor is installed to the accelerator pedal properly.
3. Verify the power circuit voltage.
   (1) Verify that the voltage between the PCM terminal 90 (power circuit) and 91 (GND circuit) is **4.75—5.25 V**.

Note
- Voltage at the PCM terminal 10 may deviate when the power circuit voltage is abnormal.

4. Verify that the voltage between the PCM terminals 10 (accelerator position detection signal) and 91 is as shown below according to the accelerator pedal conditions.
   - If the circuit is okay, replace the accelerator position sensor.

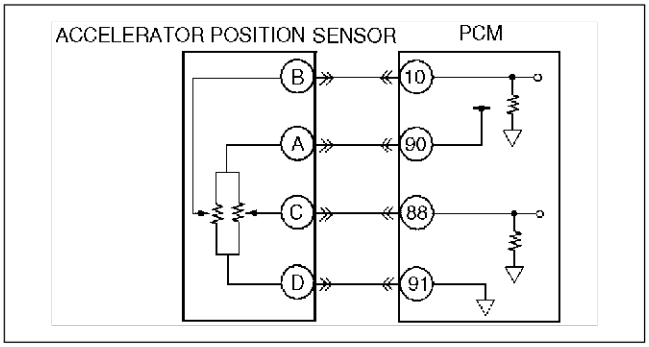

AME4340W031

Specification

Accelerator pedal condition	Output voltage (V)
Fully released	0.4—0.7 (Target value: 0.6)
Gradually depressed	Increases linearly
Fully depressed	3.35—4.03 (Target value: 3.6)

Circuit Open/Short Inspection

1. Inspect for open/short circuit in the following wiring harnesses.
   - If there is open/short circuit, repair or replace wiring harnesses.

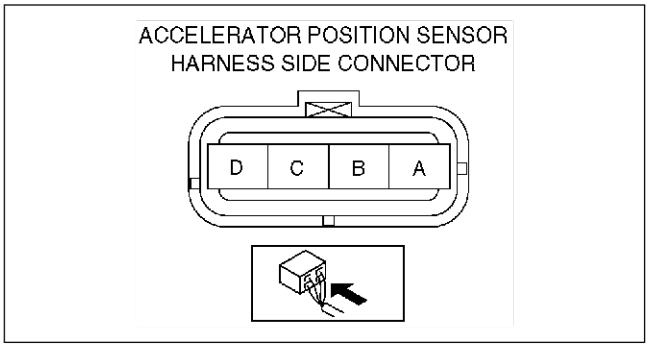

AME4340W041

Open circuit
- Power circuit
  — Accelerator position sensor terminal A and PCM terminal 90
- Signal circuit
  — Accelerator position sensor terminal B and PCM terminal 10
  — Accelerator position sensor terminal C and PCM terminal 88
- GND circuit
  — Accelerator position sensor terminal D and PCM terminal 91

Short circuit
- Power circuit
  — Accelerator position sensor terminal A and PCM terminal 90 to GND
- Signal circuit
  — Accelerator position sensor terminal B and PCM terminal 10 to power circuit
  — Accelerator position sensor terminal B and PCM terminal 10 to GND
  — Accelerator position sensor terminal C and PCM terminal 88 to power circuit
  — Accelerator position sensor terminal C and PCM terminal 88 to GND

End Of Sie

ACCELERATOR POSITION SENSOR ADJUSTMENT

AME434041602W07

Caution

- **Adjusting the accelerator position sensor unnecessarily may adversely affect engine control. Therefore, adjust accelerator position sensor only when it is replaced.**

Note

- Accelerator position sensor adjustment is based on the output voltage with the accelerator pedal fully released. Therefore, be sure to adjust according to the following procedure. (Begin adjustment with the accelerator pedal fully released.)

1. Visually inspect all accelerator pedal components for looseness.
2. Install the accelerator position sensor.
3. Verify the power circuit voltage.
   (1) Verify that the voltage between the PCM terminals 90 (power circuit) and 91 (GND circuit) is **4.75—5.25 V**.

Note

- Voltage at the PCM terminal 10 may deviate when the power circuit voltage is abnormal.

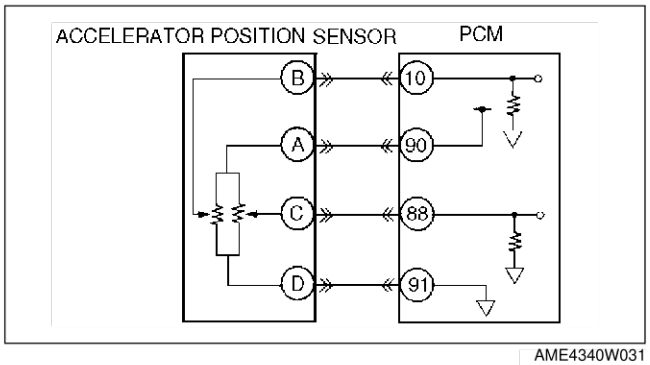

AME4340W031

4. Adjust the output voltage when the accelerator pedal is fully released.
   (1) Verify that the voltage between the PCM terminals 10 (accelerator position detection signal) and 91 is as shown below according to the accelerator pedal conditions.
   - If not as specified, move the accelerator position sensor to adjust the installation position of the accelerator position sensor so that the PCM terminal 10 voltage is within the specification.

Specification

Accelerator pedal condition	Output voltage (V)
Fully released	0.5—0.7 (Target value: 0.6)
Gradually depressed	Increases linearly

5. Verify that the output voltage when the accelerator pedal is fully depressed.
   (1) Depress the accelerator pedal fully and verify that the voltage at the PCM terminal 10 is within the specification.

Specification
3.4—3.8V (Target value: 3.6 V)

6. After completion of Steps 1. through 5, inspect the idle switch.

End Of Ste

F5

MASS AIR FLOW (MAF)/INTAKE AIR TEMPERATURE (IAT) SENSOR INSPECTION

AME434013210W05

Note
- Perform the following test only when directed.
- Perform “MAF Correction” after replacing the MAF/IAT sensor. (See F5–65 MAF Correction.)

MAF Sensor Voltage Inspection

1. Turn the engine switch to ON.
2. Monitor the MAF PID using the WDS or equivalent.
   - If not as specified, perform the “Circuit Open/Short Inspection”.

   MAF PID
   0.0—1.0 V

3. Start the engine and warm up the engine completely.
4. Monitor the MAF PID using the WDS or equivalent at idle.
   - If not as specified, perform the “Circuit Open/Short Inspection”.

   MAF PID
   1.5—2.1 V

MAF Sensor CIrcuit Open/Short Inspection

1. Inspect for open/short circuit in the following wiring harnesses.
   - If there is open/short circuit, repair or replace wiring harnesses.

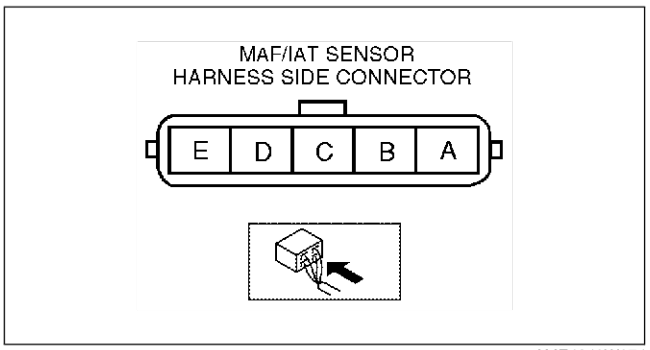

AME4340W074

Open circuit
- Power circuit
  — MAF/IAT sensor terminal A and PCM control relay terminal C
- Signal circuit
  — MAF/IAT sensor terminal C and PCM terminal 9
- GND circuit
  — MAF/IAT sensor terminal B and PCM terminal 14

Short circuit
- Power circuit
  — MAF/IAT sensor terminal A and PCM control relay terminal C to GND
- Signal circuit
  — MAF/IAT sensor terminal C and PCM terminal 9 to power circuit
  — MAF/IAT sensor terminal C and PCM terminal 9 to GND

IAT Sensor No.1 Resistance Inspection

1. Disconnect the MAF/IAT sensor connector.
2. Measure the resistance between MAF/IAT sensor terminals D and E using an ohmmeter.
   - If not as specified, replace the MAF/IAT sensor.

Specification

Ambient temperature (°C {°F})	Resistance (kilohm)
20 {68}	2.21—2.69

IAT Sensor No.1 CIrcuit Open/Short Inspection

1. Inspect for open/short circuit in the following wiring harnesses.
   - If there is open/short circuit, repair or replace wiring harnesses.

Open circuit

- Signal circuit
  — MAF/IAT sensor terminal D and PCM terminal 60
- GND circuit
  — MAF/IAT sensor terminal E and PCM terminal 91

Short circuit

- Signal circuit
  — MAF/IAT sensor terminal D and PCM terminal 60 to power circuit
  — MAF/IAT sensor terminal D and PCM terminal 60 to GND

End Of Ste

INTAKE AIR TEMPERATURE (IAT) SENSOR NO.2 INSPECTION

AME434018845W05

F5

Note

- Perform the following test only when directed.

Resistance Inspection

1. Place the IAT sensor No.2 in water with a thermometer, and heat the water gradually.
2. Measure the resistance between the IAT sensor No.2 terminals using an ohmmeter.
   - If not as specified, replace the IAT sensor No.2.

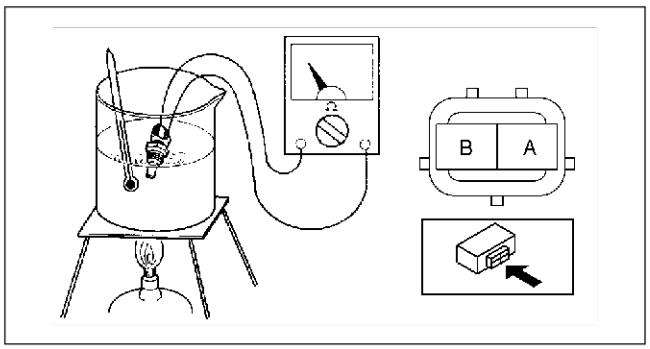

AME4340W045

Specification

Water temperature (°C {°F})	Resistance (kilohm)
20 {68}	2.21—2.69
80 {176}	0.29—0.35

Circuit Open/Short Inspection

1. Inspect for open/short circuit in the following wiring harnesses.
   - If there is open/short circuit, repair or replace wiring harnesses.

Open circuit

- Signal circuit
  — IAT sensor No.2 terminal A and PCM terminal 8
- GND circuit
  — IAT sensor No.2 terminal B and PCM terminal 91

Short circuit

- Signal circuit
  — IAT sensor No.2 terminal A and PCM terminal 8 to power circuit
  — IAT sensor No.2 terminal A and PCM terminal 8 to GND

End Of Ste

ENGINE COOLANT TEMPERATURE (ECT) SENSOR REMOVAL/INSTALLATION

AME434018840W07

Warning

- **When the engine is hot, it can badly burn. Turn off the engine and wait until it is cool before removing the ECT sensor.**

1. Disconnect the negative battery cable.
2. Drain the engine coolant. (See D–16 ENGINE OIL REPLACEMENT.)
3. Remove the common rail. (See F5–82 SUPPLY PUMP REMOVAL/INSTALLATION.)
4. Remove in the order indicated in the table.

1	ECT sensor
2	Gasket

5. Install in the reverse order of removal.

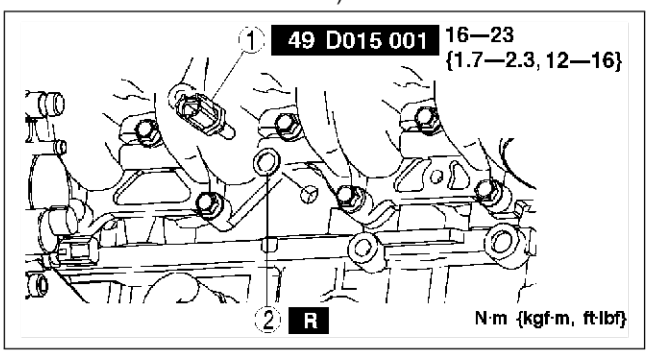

AME4340W081

End Of Sie

ENGINE COOLANT TEMPERATURE (ECT) SENSOR INSPECTION

AME434018840W06

Note

- Perform the following test only when directed.

Resistance Inspection

1. Place the ECT sensor in water with a thermometer, and heat the water gradually.
2. Measure the resistance between the ECT sensor terminals using an ohmmeter.
   - If not as specified, replace the ECT sensor.

Specification

Water temperature (°C {°F})	Resistance (kilohm)
20 {68}	2.21—2.69
80 {176}	0.29—0.34

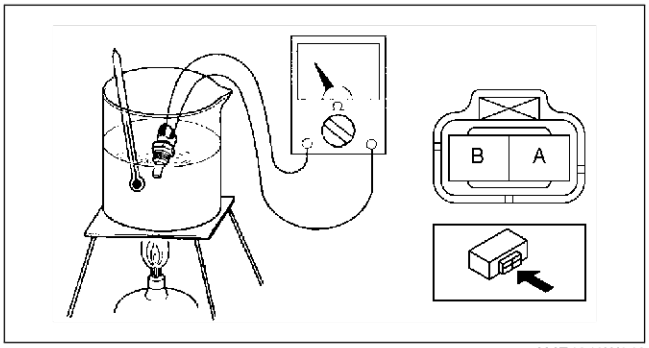

AME4340W043

Circuit Open/Short Inspection

1. Inspect for open/short circuit in the following wiring harnesses.
   - If there is open/short circuit, repair or replace wiring harness.

Open circuit

- Signal circuit
  — ECT sensor terminal A and PCM terminal 87
- GND circuit
  — ECT sensor terminal B and PCM terminal 91

Short circuit

- Signal circuit
  — ECT sensor terminal A and PCM terminal 87 to power circuit
  — ECT sensor terminal A and PCM terminal 87 to GND

End Of Sie

FUEL TEMPERATURE SENSOR INSPECTION

AME434013350W01

Note
- Perform the following test only when directed.

Resistance Inspection

1. Disconnect the negative battery cable.
2. Remove the supply pump. (See F5–82 SUPPLY PUMP REMOVAL/INSTALLATION.)
3. Measure the resistance between the fuel temperature sensor terminals using an ohmmeter.
   - If not as specified, repair the supply pump. (See F5–82 SUPPLY PUMP INSPECTION.)

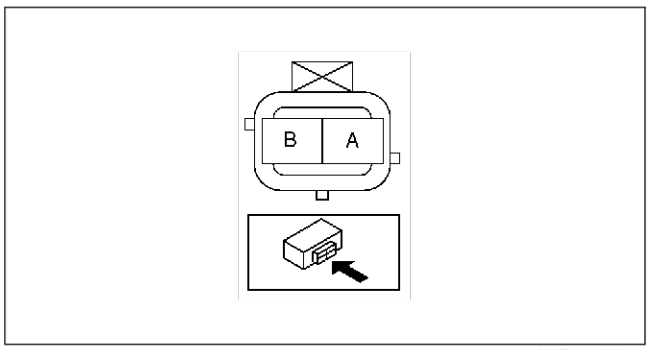

AME4340W044

Specification

Ambient temperature (°C {°F})	Resistance (kilohm)
20 {68}	2.0—3.0

Circuit Open/Short Inspection

1. Inspect for open/short circuit in the following wiring harnesses.
   - If there is open/short circuit, repair or replace wiring harness.

Open circuit
- Signal circuit
  — Fuel temperature sensor terminal A and PCM terminal 35
- GND circuit
  — Fuel temperature sensor terminal B and PCM terminal 91

Short circuit
- Signal circuit
  — Fuel temperature sensor terminal A and PCM terminal 35 to power circuit
  — Fuel temperature sensor terminal A and PCM terminal 35 to GND

End Of Ste

BOOST SENSOR INSPECTION

AME434013214W02

Note
- Perform the following test only when directed.

Visual Inspection
1. Inspect the boost sensor for damage and cracks.
   - If not as specified, replace the boost sensor.
2. Inspect vacuum hose for improper routing, kinks or leakage.
   - If there is any malfunction, repair or replace suspected hose.

Voltage Inspection
1. Turn the engine switch to ON.
2. Monitor the MAP PID using the WDS or equivalent.
   - If not as specified, perform the “Circuit Open/Short Inspection”.

MAP PID
2.5—2.8 V

3. Start the engine and warm up the engine completely.
4. Monitor the MAP PID using the WDS or equivalent at idle.
   - If not as specified, perform the “Circuit Open/Short Inspection”.

MAP PID
2.5—2.8 V

Circuit Open/Short Inspection
1. Inspect for open/short circuit in the following wiring harnesses.
   - If there is open/short circuit, repair or replace wiring harnesses.

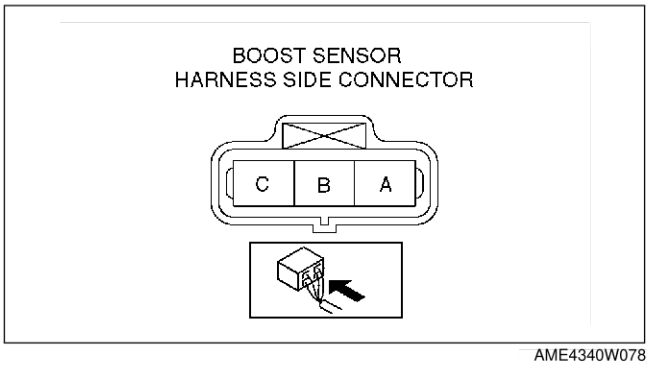

AME4340W078

Open circuit
- Power circuit
  — Boost sensor terminal C and PCM terminal 90
- Signal circuit
  — Boost sensor terminal B and PCM terminal 36
- GND circuit
  — Boost sensor terminal A and PCM terminal 91

Short circuit
- Power circuit
  — Boost sensor terminal C and PCM terminal 90 to GND
- Signal circuit
  — Boost sensor terminal B and PCM terminal 36 to power circuit
  — Boost sensor terminal B and PCM terminal 36 to GND

End Of Sec

FUEL PRESSURE SENSOR INSPECTION

AME434013015W02

Note
- Perform the following test only when directed.

Voltage Inspection
1. Start the engine and warm up the engine completely.
2. Measure the voltage between fuel pressure sensor terminals A and B using a voltmeter at idle.
   - If not as specified, perform the “Circuit Open/ Short Inspection”.
     — If there is no open/short circuit, replace the common rail.

   Specification
   1.4—1.7 V

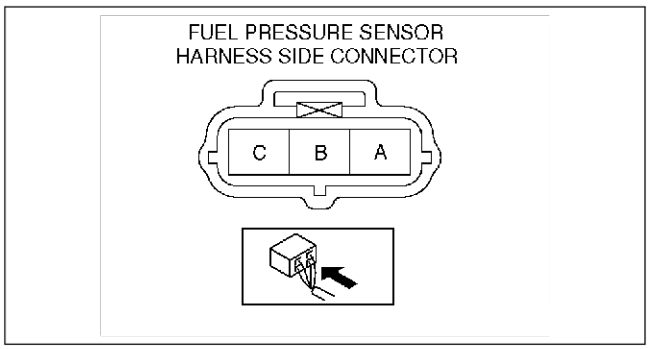

AME4340W011

3. Turn off the engine and wait three minutes.
4. Turn the engine switch to ON.
5. Measure the voltage between fuel pressure sensor terminals A and B using a voltmeter.
   - If not as specified, perform the “Circuit Open/Short Inspection”.
     — If there is no open/short circuit, replace the common rail.

   Specification
   0.9—1.1 V

CIrcuit Open/Short Inspection
1. Inspect for open/short circuit in the following wiring harnesses.
   - If there is open/short circuit, repair or replace wiring harnesses.

Open circuit
- Power circuit
  — Fuel pressure sensor terminal C and PCM terminal 90
- Signal circuit
  — Fuel pressure sensor terminal B and PCM terminal 61
- GND circuit
  — Fuel pressure sensor terminal A and PCM terminal 91

Short circuit
- Power circuit
  — Fuel pressure sensor terminal C and PCM terminal 90 to GND
- Signal circuit
  — Fuel pressure sensor terminal B and PCM terminal 61 to power circuit
  — Fuel pressure sensor terminal B and PCM terminal 61 to GND

End Of Sta

F5

CAMSHAFT POSITION (CMP) SENSOR REMOVAL/INSTALLATION

AME434018200W06

Caution
- **When foreign material, such as iron chips, gets on the CMP sensor, it can cause abnormal output from the sensor because of flux turbulence and adversely affect engine control. Be sure there is no foreign material on the CMP sensor when replacing.**
- **Do not forcefully pull the wiring harness of the CMP sensor. Doing so will break the harness.**

1. Disconnect the negative battery cable.
2. Remove the engine cover.
3. Remove in the order indicated in the table.

1	CMP sensor installation bolt
2	CMP sensor
3	O-ring (See F5–110 O-ring Installation Note)

4. Install in the reverse order of removal.

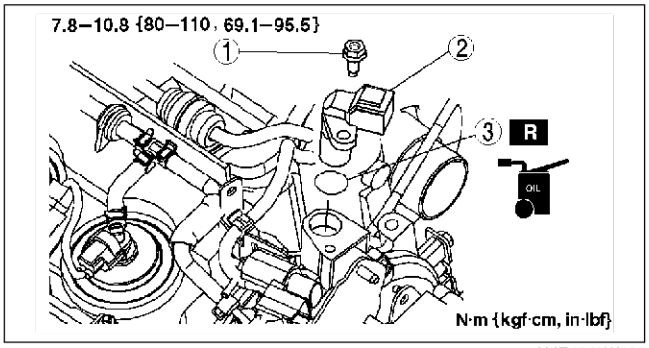

AME4340W082

O-ring Installation Note

1. Apply engine oil to new O-ring thinly and install it as does not damage.

End Of Sie

CAMSHAFT POSITION (CMP) SENSOR INSPECTION

AME434018200W05

Note
- Perform the following test only when directed.

Caution
- **When foreign material, such as iron chips, gets on the CMP sensor, it can cause abnormal output from the sensor because of flux turbulence and adversely affect engine control. Be sure there is no foreign material on the CMP sensor when replacing.**
- **Do not forcefully pull the wiring harness of the CMP sensor. Doing so will break the harness.**

Visual Inspection

1. Verify that the CMP sensor and the pulsar are free of any metallic shavings or particles.
   - If any are found on the CMP sensor and the pulsar, clean them off.

Air Gap Inspection

1. Disconnect the negative battery cable.
2. Remove the gear cover.
3. Verify that clearance A between the CMP sensor and the pulsar is within the specification.
   - If not as specified, replace the CMP sensor.

Clearance A
0.5—1.5 mm {0.020—0.059 in}

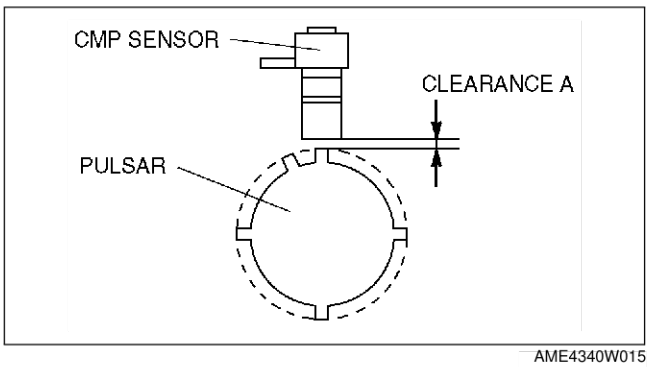

AME4340W015

Resistance Inspection

1. Disconnect the negative battery cable.
2. Remove the engine cover.
3. Disconnect the CMP sensor connector.
4. Inspect the resistance between the terminals under the following condition.
   - If not as specified, replace the CMP sensor.

Specification

Terminal	Atmospheric temperature (°C {°F})	Resistance (kilohm)
A—B	20 {68}	1.85—2.45

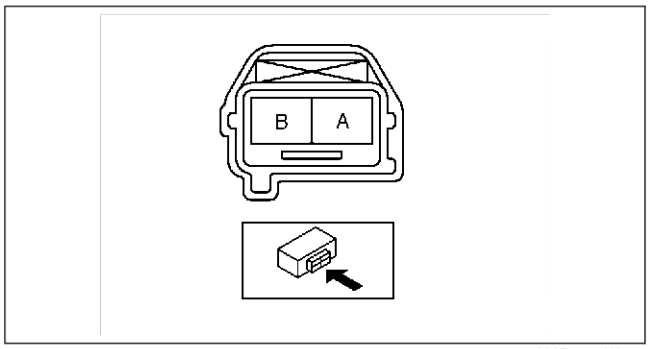

AME4340W009

Circuit Open/Short Inspection

1. Inspect for open/short circuit in the following wiring harnesses.
   - if there is open/short circuit, repair or replace wiring harnesses.

Open circuit

- CMP sensor terminal A and PCM terminal 81
- CMP sensor terminal B and PCM terminal 55

Short circuit

- CMP sensor terminal A and PCM terminal 81 to GND
- CMP sensor terminal B and PCM terminal 55 to GND

End Of Sie

CRANKSHAFT POSITION (CKP) SENSOR REMOVAL/INSTALLATION

AME434018230W06

Caution

- **When foreign material, such as iron chips, gets on the CKP sensor, it can cause abnormal output from the sensor because of flux turbulence and adversely affect engine control. Be sure there is no foreign material on the CKP sensor when replacing.**
- **Do not forcefully pull the wiring harness of the CKP sensor. Doing so will break the harness.**

1. Disconnect the negative battery cable.
2. Remove the crankshaft pulley. (See B4–17 TIMING BELT REMOVAL/INSTALLATION.)
3. Remove the lower timing belt cover. (See B4–17 TIMING BELT REMOVAL/INSTALLATION.)
4. Remove in the order indicated in the table.

1	CKP sensor installation bolt
2	CKP sensor

5. Install in the reverse order of removal.

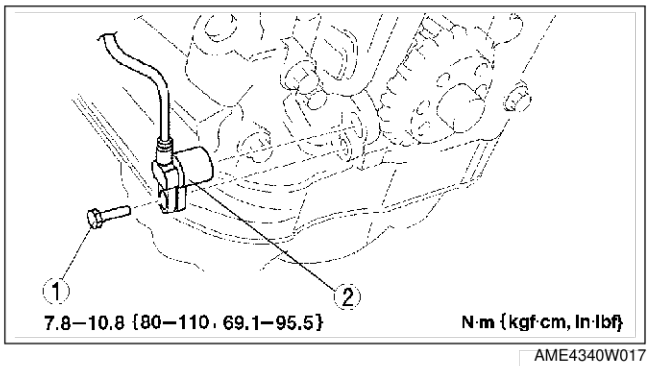

AME4340W017

End Of Sie

F5

CRANKSHAFT POSITION (CKP) SENSOR INSPECTION

AME434018230W07

Note
- Perform the following test only when directed.

Caution
- **When foreign material, such as iron chips, gets on the CKP sensor, it can cause abnormal output from the sensor because of flux turbulence and adversely affect engine control. Be sure there is no foreign material on the CKP sensor when replacing.**
- **Do not forcefully pull the wiring harness of the CKP sensor. Doing so will break the harness.**

Visual Inspection
1. Verify that the CKP sensor and the pulsar are free of any metallic shavings or particles.
   - If any are found on the CKP sensor and the pulsar, clean them off.

Air Gap Inspection
1. Disconnect the negative battery cable.
2. Remove the crankshaft pulley. (See B4–17 TIMING BELT REMOVAL/INSTALLATION.)
3. Remove the crankshaft pulley. (See B4–17 TIMING BELT REMOVAL/INSTALLATION.)
4. Verify that clearance A between the CKP sensor and the pulsar is within the specification.
   - If not as specified, replace the CKP sensor.

Clearance A
1.5—2.5 mm {0.059—0.098 in}

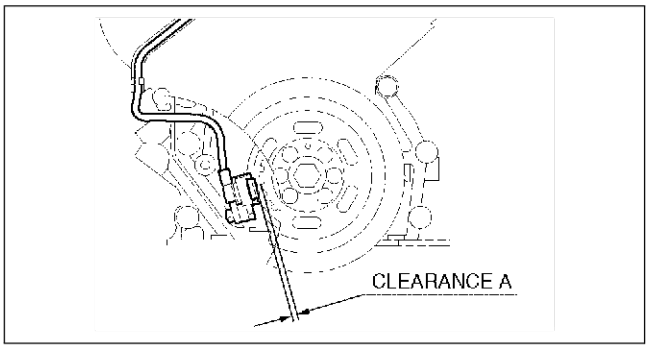

AME4340W018

Resistance Inspection
1. Disconnect the negative battery cable.
2. Disconnect the CKP sensor connector.
3. Measure the resistance between the CKP sensor terminals under the following condition.
   - If not as specified, replace the CKP sensor.

Specification

Terminal	Atmospheric temperature °C {°F}	Resistance (kilohm)
A—B	20 {68}	1.8—2.45

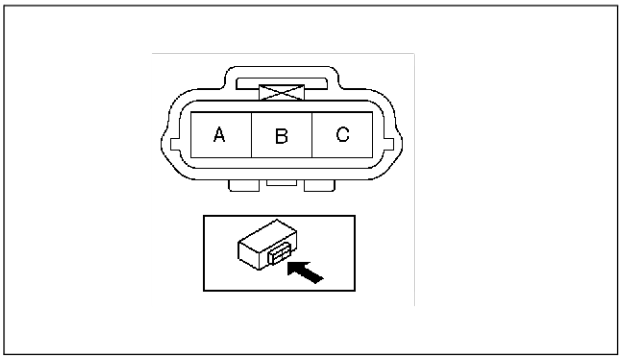

AME4340W003

Circuit Open/Short Inspection
1. Inspect for open/short circuit in the following wiring harnesses.
   - If there is open/short circuit, repair or replace wiring harnesses.

Open circuit
- CKP sensor terminal A and PCM terminal 29
- CKP sensor terminal B and PCM terminal 3

Short circuit
- CKP sensor terminal A and PCM terminal 29 to GND
- CKP sensor terminal B and PCM terminal 3 to GND

End Of Sie

CALIBRATION RESISTOR INSPECTION

AME434013050W05

Note
- Perform the following test only when directed.

Resistance Inspection

1. Remove the calibration resistor.
2. Verify the calibration resistor rank number.
3. Refer to the table below and verify the resistance corresponding to the resistor rank number.

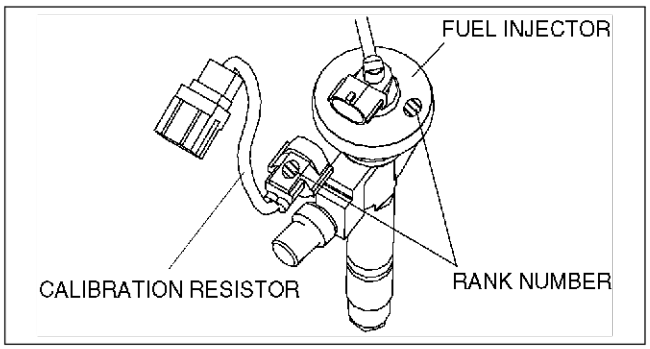

AME4340W088

4. Measure the resistance between the calibration resistor terminals A and C using an ohmmeter.
   - If not as specified, replace the calibration resistor.

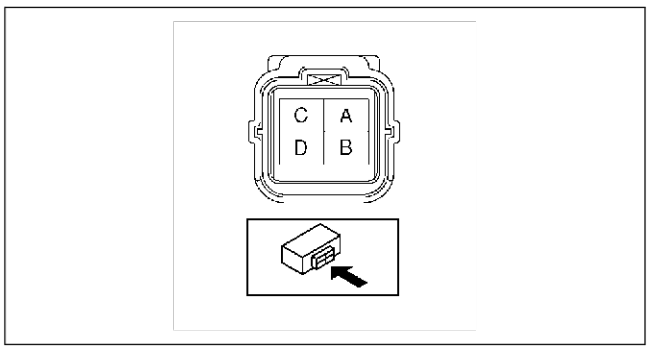

AME4340W029

Specification

Fuel injector rank number	Calibration resistor	
	Rank number	Resistance (ohm)
1	1	30.9
2	2	41.2
3	3	53.6
4	4	68.1
5	5	84.5
6	6	105
7	7	130
8	8	158
9	9	196
10	10	243
11	11	301
12	12	365

Fuel injector rank number	Calibration resistor	
	Rank number	Resistance (ohm)
13	13	442
14	14	549
15	15	665
16	16	825
17	17	1020
18	18	1240
19	19	1540
20	20	1920
21	21	2370
22	22	3010
23	23	4020
24	24	5760
25	25	9530

CIrcuit Open/Short Inspection

1. Inspect for open/short circuit in the following wiring harnesses.
   - If there is open/short circuit, repair or replace wiring harnesses.

Open circuit

- Signal circuit
  - — Calibration resistor No.1 terminal A and PCM terminal 37
  - — Calibration resistor No.2 terminal A and PCM terminal 62
  - — Calibration resistor No.3 terminal A and PCM terminal 89
  - — Calibration resistor No.4 terminal A and PCM terminal 11
- GND circuit
  - — Each calibration resistor terminal C and PCM terminal 91

Short circuit

- Signal circuit
  - — Calibration resistor No.1 terminal A and PCM terminal 37 to power circuit
  - — Calibration resistor No.1 terminal A and PCM terminal 37 to GND
  - — Calibration resistor No.2 terminal A and PCM terminal 62 to power circuit
  - — Calibration resistor No.2 terminal A and PCM terminal 62 to GND
  - — Calibration resistor No.3 terminal A and PCM terminal 89 to power circuit
  - — Calibration resistor No.3 terminal A and PCM terminal 89 to GND
  - — Calibration resistor No.4 terminal A and PCM terminal 11 to power circuit
  - — Calibration resistor No.4 terminal A and PCM terminal 11 to GND

End Of Sie

INJECTOR DRIVER MODULE (IDM) INSPECTION

AME434018701W05

Warning

- **The IDM outputs high voltage and current for fuel injector driving. Do not inspect the IDM terminal voltage, as it may cause an electric shock.**

Note

- Perform the following test only when directed.

1. If any IDM-related failures are suspected, inspect the following:
   - DTCs
   - IDM-related harnesses
   - Fuel injectors

End Of Sie

ON-BOARD DIAGNOSTIC

ON-BOARD DIAGNOSTIC TEST

AME437018881W05

DTCs Retrieving Procedure

1. Perform the necessary vehicle preparation and visual inspection.
2. Connect the WDS or equivalent to the vehicle DLC-2 16-pin connector.
3. Retrieve DTC using the WDS or equivalent.

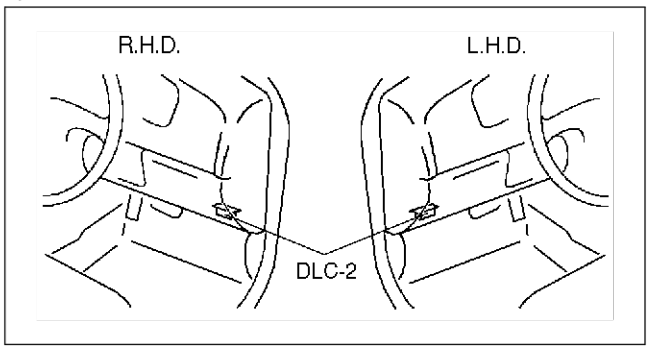

AME4370W013

PID/DATA Monitor and Record Procedure

1. Perform the necessary vehicle preparation and visual inspection.
2. Connect the WDS or equivalent to the vehicle DLC-2 16-pin connector.
3. Access and monitor PIDs using the WDS or equivalent.

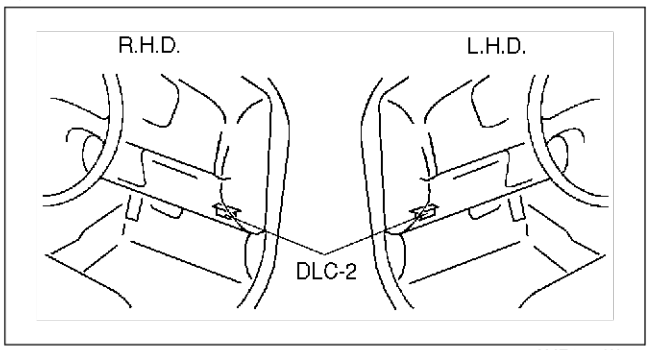

AME4370W013

End Of Sie

DTC CONFIRMATION PROCEDURE

AME437018881W10

STEP	INSPECTION		ACTION
1	**RECORD CONTINUOUS MEMORY DTC** • Turn engine switch to ON (Engine OFF). • Retrieve all stored DTCs using WDS or equivalent. • Are there any DTCs present?	Yes	Record all stored DTCs (continuous memory DTC), then go to next step.
		No	Go to next step.
2	**VERIFY RELATED REPAIR INFORMATION AVAILABILITY** • Check for related Service Information availability. • Is any related repair information available?	Yes	Perform repair or diagnosis according to available Service information. • If vehicle is not repaired, go to next step.
		No	Go to next step.
3	**PERFORM KOEO SELF-TEST** • Start engine. • Warm up engine completely. • Turn off all electrical loads. • Perform KOEO SELF-TEST PROCEDURE. (See F5–116 KOEO/KOER SELF-TEST procedure) • Are there any KOEO DTCs present?	Yes	Repair KOEO DTC. (See F5–117 DTC TABLE)
		No	Go to next step.
4	**PERFORM KOER SELF-TEST** • Start engine. • Perform KOER SELF-TEST PROCEDURE. (See F5–116 KOEO/KOER SELF-TEST procedure) • Are there any KOER DTCs present?	Yes	Repair KOER DTC. (See F5–117 DTC TABLE)
		No	• If continuous memory DTC is present at Step 1, return to applicable DTC troubleshooting procedure step. • If continuous memory DTC is not present at Step 1, go to symptom troubleshooting.

End Of Sie

KOEO/KOER SELF-TEST PROCEDURE

1. Connect the WDS or equivalent to the vehicle DLC-2 16-pin connector.
2. Perform KOEO/KOER self-test.

AME437018881W08

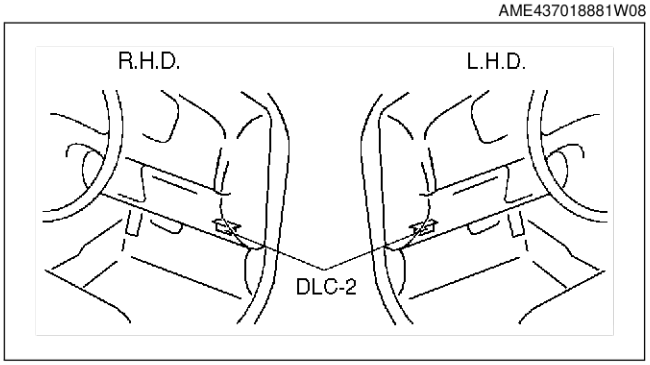

AME4370W013

End Of Sie

AFTER REPAIR PROCEDURE

1. Connect the WDS or equivalent to the vehicle DLC-2 16-pin connector.
2. Turn the engine switch to ON.
3. Record DTC if retrieved.
4. Erase all diagnostic data using WDS or equivalent.

AME437018881W09

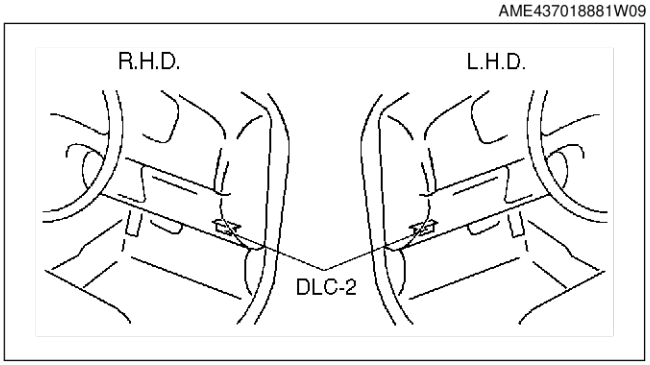

AME4370W013

End Of Sie

DTC TABLE

AME437018881W06

×: Applicable —: Not applicable

DTC	Condition	MIL	Memory function	Page
P0016	Crankshaft position-camshaft position correlation malfunction	×	×	(See F5–118 DTC P0016)
P0088	Fuel pressure system too high	—	×	(See F5–119 DTC P0088)
P0091	Suction control valve circuit low input	×	×	(See F5–120 DTC P0091)
P0092	Suction control valve circuit high input	×	×	(See F5–122 DTC P0092)
P0093	Fuel system leak detection	×	×	(See F5–123 DTC P0093)
P0097	IAT sensor No.1 circuit low input	×	×	(See F5–124 DTC P0097)
P0098	IAT sensor No.1 circuit high input	×	×	(See F5–126 DTC P0098)
P0102	MAF sensor circuit low input	×	×	(See F5–128 DTC P0102)
P0103	MAF sensor circuit high input	×	×	(See F5–130 DTC P0103)
P0107	Boost sensor circuit low input	×	×	(See F5–132 DTC P0107)
P0108	Boost sensor circuit high input	×	×	(See F5–134 DTC P0108)
P0112	IAT sensor No.2 circuit low input	×	×	(See F5–136 DTC P0112)
P0113	IAT sensor No.2 circuit high input	×	×	(See F5–138 DTC P0113)
P0117	ECT sensor circuit low input	×	×	(See F5–140 DTC P0117)
P0118	ECT sensor circuit high input	×	×	(See F5–142 DTC P0118)
P0121	Accelerator position sensor No.1 circuit performance problem	×	×	(See F5–144 DTC P0121)
P0122	Accelerator position sensor No.1 circuit low input	×	×	(See F5–146 DTC P0122)
P0123	Accelerator position sensor No.1 circuit high input	×	×	(See F5–148 DTC P0123)
P0182	Fuel temperature sensor circuit low input	×	×	(See F5–150 DTC P0182)
P0183	Fuel temperature sensor circuit high input	×	×	(See F5–152 DTC P0183)
P0191	Fuel pressure sensor circuit performance problem	×	×	(See F5–153 DTC P0191)
P0192	Fuel pressure sensor circuit low input	×	×	(See F5–154 DTC P0192)
P0193	Fuel pressure sensor circuit high input	×	×	(See F5–156 DTC P0193)
P0200	Fuel injector circuit malfunction	×	×	(See F5–158 DTC P0200)
P0221	Accelerator position sensor No.2 circuit performance problem	×	×	(See F5–160 DTC P0221)
P0222	Accelerator position sensor No.2 circuit low input	×	×	(See F5–161 DTC P0222)
P0223	Accelerator position sensor No.2 circuit high input	×	×	(See F5–163 DTC P0223)
P0300	Random misfire detection	×	×	(See F5–165 DTC P0300)
P0336	CKP sensor circuit performance problem	×	×	(See F5–166 DTC P0336)
P0337	CKP sensor circuit low input	×	×	(See F5–167 DTC P0337)
P0341	CMP sensor circuit performance problem	×	×	(See F5–169 DTC P0341)
P0342	CMP sensor circuit low input	×	×	(See F5–170 DTC P0342)
P0380	Glow plug relay circuit malfunction	×	×	(See F5–172 DTC P0380)
P0500	VSS circuit malfunction	×	×	(See F5–174 DTC P0500)
P0510	Idle switch circuit malfunction	×	×	(See F5–176 DTC P0510)
P0512	Engine switch circuit malfunction	×	×	(See F5–178 DTC P0512)
P0606	PCM malfunction	×	×	(See F5–179 DTC P0606)
P0661	VSC solenoid valve circuit low input	—	×	(See F5–180 DTC P0661)
P0662	VSC solenoid valve circuit high input	—	×	(See F5–182 DTC P0662)
P0850	Neutral switch circuit malfunction	×	×	(See F5–184 DTC P0850)
P1190	Calibration resistor circuit malfunction	×	×	(See F5–186 DTC P1190)
P1602	Immobilizer unit-PCM communication error	—	×	(See F5–188 DTC P1602)
P1603	Key ID number unregistered in PCM	—	×	(See F5–190 DTC P1603)
P1604	Code word unregistered in PCM	—	×	(See F5–191 DTC P1604)
P1621	Code words do not match after engine cranking	—	×	(See F5–191 DTC P1621)
P1622	Key ID number mismatch	—	×	(See F5–192 DTC P1622)
P1623	Cord word or key ID number read/write error in PCM	—	×	(See F5–192 DTC P1623)
P1624	Immobilizer system communication counter = 0	—	×	(See F5–193 DTC P1624)
P2228	BARO sensor circuit low input	×	×	(See F5–193 DTC P2228)
P2229	BARO sensor circuit high input	×	×	(See F5–194 DTC P2229)

End Of Sie

DTC P0016

AME437001082W01

DTC P0016	Crankshaft position-camshaft position correlation malfunction
DETECTION CONDITION	• PCM monitors input signals from CKP sensor and CMP sensor while engine is running. If input signals from CKP sensor and CMP sensor are misaligned, PCM determines crankshaft position-camshaft position correlation malfunction.
POSSIBLE CAUSE	• CKP sensor malfunction • CMP sensor malfunction • Timing belt is loose • PCM malfunction

Diagnostic procedure

STEP	INSPECTION		ACTION
1	**VERIFY RELATED REPAIR INFORMATION AVAILABILITY** • Check for related Service Information availability. • Is any related repair information available?	Yes	Perform repair or diagnosis according to available Service Information. • If vehicle is not repaired, go to next step.
		No	Go to next step.
2	**VERIFY DTC P0016 DETECTED AGAIN** • Clear DTC from PCM memory using WDS or equivalent. • Start engine. • Is same DTC present?	Yes	Go to next step.
		No	Intermittent concern exists. Go to “Intermittent Concern Troubleshooting”. (See F5–195 INTERMITTENT CONCERN TROUBLESHOOTING)
3	**FOLLOW OTHER DETECTED DTC FIRST** • Turn engine switch to OFF. • Start engine. • Have P0336, P0337, P0341, P0342 been detected?	Yes	Go to applicable DTC inspection. (See F5–117 DTC TABLE)
		No	Go to next step.
4	**INSPECT CKP SENSOR** • Inspect CKP sensor. (See F5–112 CRANKSHAFT POSITION (CKP) SENSOR INSPECTION) • Is there any malfunction?	Yes	Replace CKP sensor, go to Step 7. (See F5–111 CRANKSHAFT POSITION (CKP) SENSOR REMOVAL/INSTALLATION)
		No	Go to next step.
5	**INSPECT CMP SENSOR** • Inspect CMP sensor. (See F5–110 CAMSHAFT POSITION (CMP) SENSOR INSPECTION) • Is there any malfunction?	Yes	Replace CMP sensor, go to nStep 7. (See F5–110 CAMSHAFT POSITION (CMP) SENSOR REMOVAL/INSTALLATION)
		No	Go to next step.
6	**INSPECT TIMING BELT** • Inspect timing belt installation. • Is there any malfunction?	Yes	Reinstall timing belt, go to next step.
		No	Go to next step.
7	**VERIFY TROUBLESHOOTING OF DTC P0016 COMPLETED** • Make sure to reconnect all disconnected connectors. • Clear DTC from PCM memory using WDS or equivalent. • Start engine. • Is same DTC present?	Yes	Replace PCM, go to next step. (See F5–94 PCM REMOVAL/INSTALLATION)
		No	Go to next step.
8	**VERIFY AFTER REPAIR PROCEDURE** • Perform “After Repair Procedure”. (See F5–116 AFTER REPAIR PROCEDURE) • Is there any DTC present?	Yes	Go to applicable DTC inspection. (See F5–117 DTC TABLE)
		No	Troubleshooting completed.

End Of Se

DTC P0088

AME437001082W42

DTC P0088	Fuel pressure system too high
DETECTION CONDITION	• PCM monitors fuel pressure in common rail from fuel pressure sensor while engine running. If fuel pressure is higher than preprogrammed criteria, PCM determines fuel pressure system too high.
POSSIBLE CAUSE	• Suction control valve malfunction • Fuel pressure sensor malfunction • Fuel pressure limiter malfunction • PCM malfunction

Diagnostic procedure

STEP	INSPECTION		ACTION
1	**VERIFY RELATED REPAIR INFORMATION AVAILABILITY** • Check for related Service Information availability. • Is any related repair information available?	Yes	Perform repair or diagnosis according to available Service Information. • If vehicle is not repaired, go to next step.
		No	Go to next step.
2	**FOLLOW OTHER DETECTED DTC FIRST** • Turn engine switch to OFF. • Start engine. • Have P0091, P0092, P0191, P0192, P0193 been detected?	Yes	Go to applicable DTC inspection. (See F5–117 DTC TABLE)
		No	Go to next step.
3	**INSPECT SUCTION CONTROL VALVE** • Inspect suction control valve. (See F5–83 SUCTION CONTROL VALVE INSPECTION) • Is there any malfunction?	Yes	Repair supply pump, go to Step 6. (See F5–82 SUPPLY PUMP INSPECTION)
		No	Go to next step.
4	**INSPECT FUEL PRESSURE SENSOR** • Inspect fuel pressure sensor. (See F5–109 FUEL PRESSURE SENSOR INSPECTION) • Is there any malfunction?	Yes	Replace common rail, go to Step 6. (See F5–82 SUPPLY PUMP REMOVAL/INSTALLATION)
		No	Go to next step.
5	**INSPECT COMMON RAIL** • Inspect common rail. (See F5–83 COMMON RAIL INSPECTION) • Is there any malfunction?	Yes	Replace common rail, go to next step. (See F5–82 SUPPLY PUMP REMOVAL/INSTALLATION)
		No	Go to next step.
6	**VERIFY TROUBLESHOOTING OF DTC P0088 COMPLETED** • Make sure to reconnect all disconnected connectors. • Clear DTC from PCM memory using WDS or equivalent. • Start engine. • Is same DTC present?	Yes	Replace PCM, go to next step. (See F5–94 PCM REMOVAL/INSTALLATION)
		No	Go to next step.
7	**VERIFY AFTER REPAIR PROCEDURE** • Perform “After Repair Procedure”. (See F5–116 AFTER REPAIR PROCEDURE) • Is there any DTC present?	Yes	Go to applicable DTC inspection. (See F5–117 DTC TABLE)
		No	Troubleshooting completed.

End Of Ste

DTC P0091

AME437001082W02

DTC P0091	Suction control valve circuit low input
DETECTION CONDITION	• PCM monitors input voltage from suction control valve while engine is running. If input voltage from suction control valve does not change from off to on, PCM determines suction control valve circuit low input.
POSSIBLE CAUSE	• Suction control valve malfunction • Connector or terminal malfunction • Short to GND in wiring between suction control valve terminal A and PCM terminal 93 • Short to GND in wiring between suction control valve terminal B and PCM terminal 94 • Open circuit in wiring between suction control valve terminal A and PCM terminal 93 • Open circuit in wiring between suction control valve terminal B and PCM terminal 94 • PCM malfunction

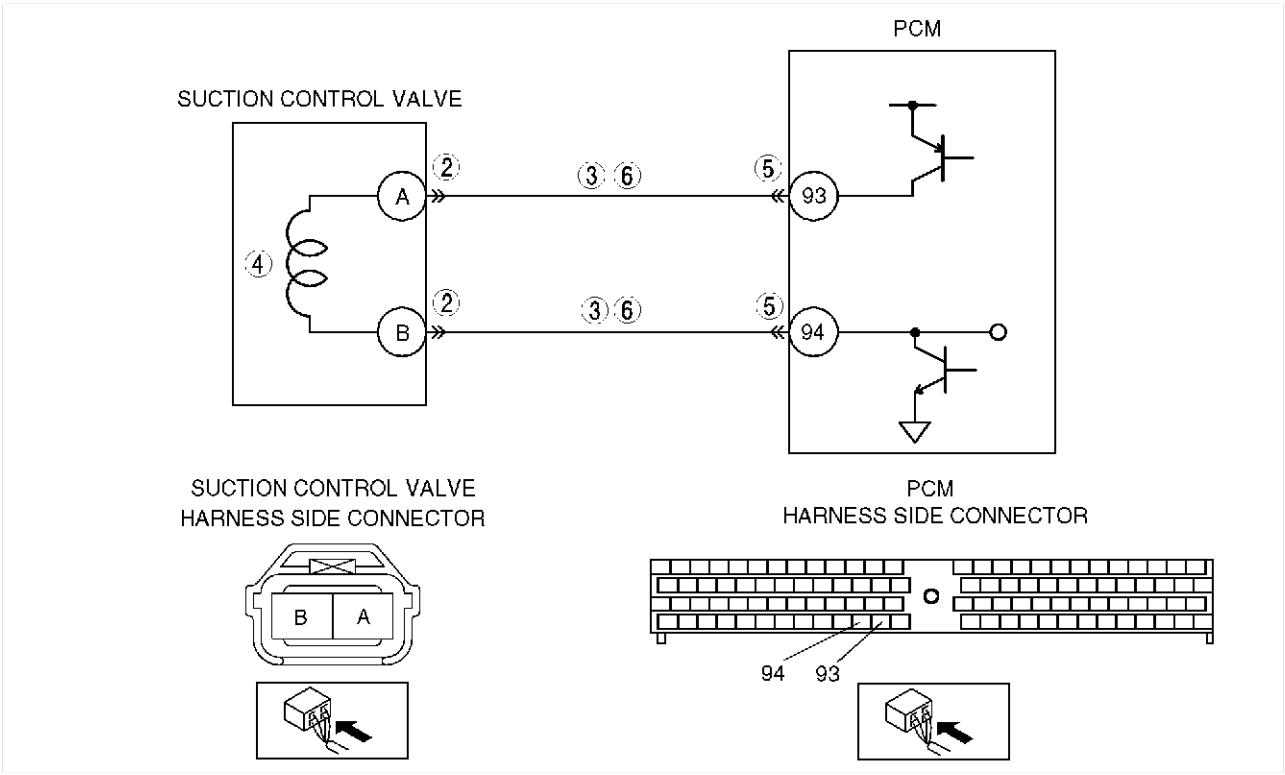

Diagnostic procedure

STEP	INSPECTION		ACTION
1	**VERIFY RELATED REPAIR INFORMATION AVAILABILITY** • Check for related Service Information availability. • Is any related repair information available?	Yes	Perform repair or diagnosis according to available Service Information. • If vehicle is not repaired, go to next step.
		No	Go to next step.
2	**INSPECT POOR CONNECTION OF SUCTION CONTROL VALVE CONNECTOR** • Turn engine switch to OFF. • Inspect for poor connection (damaged, pulled-out terminals, corrosion, etc.). • Is there any malfunction?	Yes	Repair or replace suspected terminal, go to Step 7.
		No	Go to next step.

STEP	INSPECTION		ACTION
3	**INSPECT SUCTION CONTROL VALVE CIRCUIT FOR SHORT TO GND** • Turn engine switch to OFF. • Inspect continuity between following harnesses: — Suction control valve terminal A and body GND. — Suction control valve terminal B and body GND. • Is there continuity?	Yes	Repair or replace harness for short to GND, go to Step 7.
		No	Go to next step.
4	**INSPECT SUCTION CONTROL VALVE** • Inspect suction control valve. (See F5–83 SUCTION CONTROL VALVE INSPECTION) • Is there any malfunction?	Yes	Repair supply pump, go to Step 7. (See F5–82 SUPPLY PUMP INSPECTION)
		No	Go to next step.
5	**INSPECT POOR CONNECTION OF PCM CONNECTOR** • Turn engine switch to OFF. • Inspect for poor connection (damaged, pulled-out terminals, corrosion, etc.). • Is there any malfunction?	Yes	Repair or replace suspected terminal, go to Step 7.
		No	Go to next step.
6	**INSPECT SUCTION CONTROL VALVE CIRCUIT FOR OPEN** • Turn engine switch to OFF. • Inspect continuity between following harnesses: — Suction control valve terminal A and PCM terminal 93. — Suction control valve terminal B and PCM terminal 94. • Is there continuity?	Yes	Go to next step.
		No	Repair or replace harness for open, go to next step.
7	**VERIFY TROUBLESHOOTING OF DTC P0091 COMPLETED** • Make sure to reconnect all disconnected connectors. • Clear DTC from PCM memory using WDS or equivalent. • Start engine. • Is same DTC present?	Yes	Replace PCM, go to next step. (See F5–94 PCM REMOVAL/INSTALLATION)
		No	Go to next step.
8	**VERIFY AFTER REPAIR PROCEDURE** • Perform “After Repair Procedure”. (See F5–116 AFTER REPAIR PROCEDURE) • Is there any DTC present?	Yes	Go to applicable DTC inspection. (See F5–117 DTC TABLE)
		No	Troubleshooting completed.

End Of Ste

DTC P0092

AME437001082W03

DTC P0092	Suction control valve circuit high input
DETECTION CONDITION	• PCM monitors input voltage from suction control valve while engine is running. If input voltage from suction control valve does not change from on to off, PCM determines suction control valve circuit high input.
POSSIBLE CAUSE	• Suction control valve malfunction • Connector or terminal malfunction • Short to power circuit in wiring between suction control valve terminal A and PCM terminal 93 • Short to power circuit in wiring between suction control valve terminal B and PCM terminal 94 • PCM malfunction

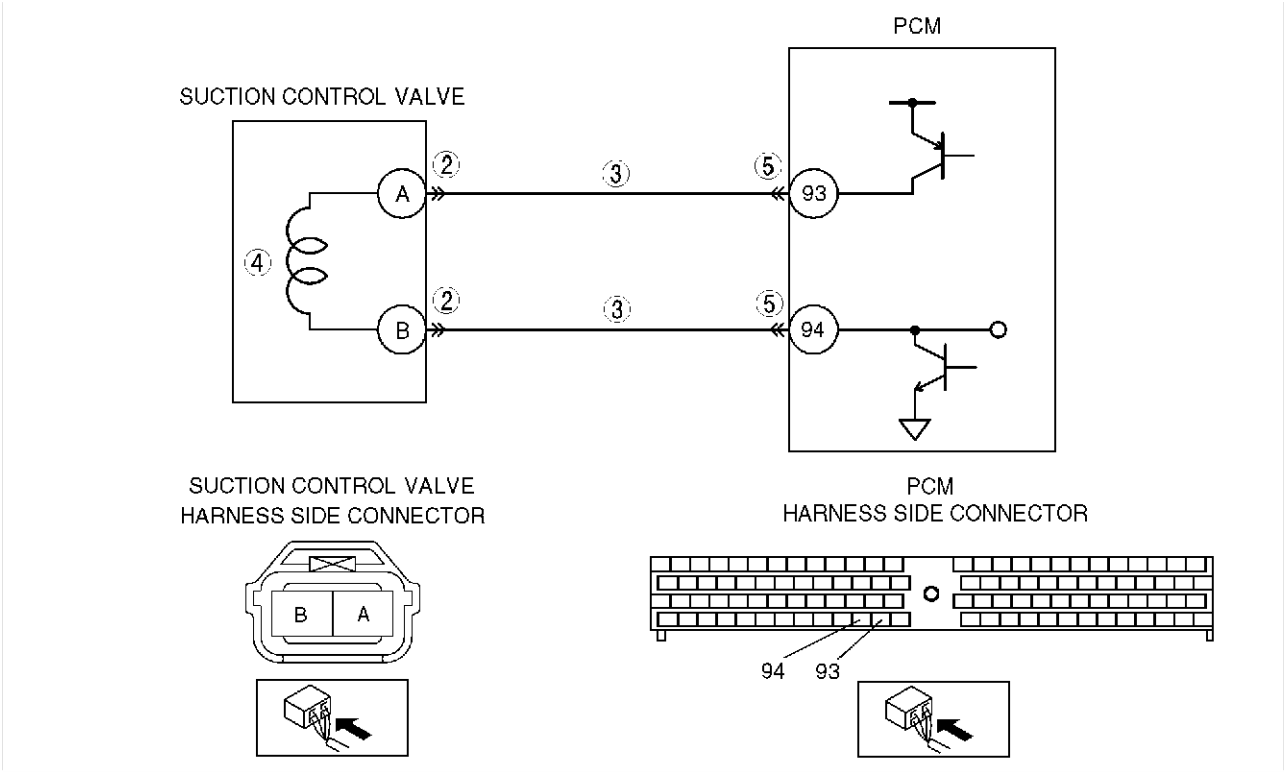

Diagnostic procedure

STEP	INSPECTION		ACTION
1	**VERIFY RELATED REPAIR INFORMATION AVAILABILITY** • Check for related Service Information availability. • Is any related repair information available?	Yes	Perform repair or diagnosis according to available Service Information. • If vehicle is not repaired, go to next step.
		No	Go to next step.
2	**INSPECT POOR CONNECTION OF SUCTION CONTROL VALVE CONNECTOR** • Turn engine switch to OFF. • Inspect for poor connection (damaged, pulled-out terminals, corrosion, etc.). • Is there any malfunction?	Yes	Repair or replace suspected terminal, go to Step 6.
		No	Go to next step.
3	**INSPECT SUCTION CONTROL VALVE CIRCUIT FOR SHORT TO POWER** • Turn engine switch to ON (Engine OFF). • Inspected voltage between following harnesses: — Suction control valve terminal A and body GND. — Suction control valve terminal B and body GND. • Is voltage **below 1.0 V**?	Yes	Go to next step.
		No	Repair or replace harness for short to power, go to Step 6.

STEP	INSPECTION		ACTION
4	**INSPECT SUCTION CONTROL VALVE** • Inspect suction control valve. (See F5–83 SUCTION CONTROL VALVE INSPECTION) • Is there any malfunction?	Yes	Repair supply pump, go to Step 6. (See F5–82 SUPPLY PUMP INSPECTION)
		No	Go to next step.
5	**INSPECT POOR CONNECTION OF PCM CONNECTOR** • Turn engine switch to OFF. • Inspect for poor connection (damaged, pulled-out terminals, corrosion, etc.). • Is there any malfunction?	Yes	Repair or replace suspected terminal, go to Step 6.
		No	Go to next step.
6	**VERIFY TROUBLESHOOTING OF DTC P0092 COMPLETED** • Make sure to reconnect all disconnected connectors. • Clear DTC from PCM memory using WDS or equivalent. • Start engine. • Is same DTC present?	Yes	Replace PCM, go to next step. (See F5–94 PCM REMOVAL/INSTALLATION)
		No	Go to next step.
7	**VERIFY AFTER REPAIR PROCEDURE** • Perform “After Repair Procedure”. (See F5–116 AFTER REPAIR PROCEDURE) • Is there any DTC present?	Yes	Go to applicable DTC inspection. (See F5–117 DTC TABLE)
		No	Troubleshooting completed.

End Of Sta

DTC P0093

AME437001082W04

DTC P0093	Fuel system leak detection
DETECTION CONDITION	• PCM monitors fuel pressure in common rail from fuel pressure sensor while engine running. If fuel pressure is lower after fuel injection than preprogrammed criteria, PCM determines fuel system leak detection.
POSSIBLE CAUSE	• Fuel leakage or clogged fuel line • Suction control valve malfunction • Fuel pressure sensor malfunction • Fuel injector malfunction • PCM malfunction

Diagnostic procedure

STEP	INSPECTION		ACTION
1	**VERIFY RELATED REPAIR INFORMATION AVAILABILITY** • Check for related Service Information availability. • Is any related repair information available?	Yes	Perform repair or diagnosis according to available Service Information. • If vehicle is not repaired, go to next step.
		No	Go to next step.
2	**FOLLOW OTHER DETECTED DTC FIRST** • Turn engine switch to OFF. • Start engine. • Have P0192, P0193, P1190 been detected?	Yes	Go to applicable DTC inspection. (See F5–117 DTC TABLE)
		No	Go to next step.
3	**INSPECT FUEL LINE** • Turn engine switch to OFF. • Inspect for fuel leakage or clogs in following fuel lines for each cylinder: — Supply pump and Common rail. — Common rail and fuel injector. • Is there any malfunction?	Yes	Repair or replace suspected fuel line, go to Step 7.
		No	Go to next step.
4	**INSPECT SUCTION CONTROL VALVE** • Inspect suction control valve. (See F5–83 SUCTION CONTROL VALVE INSPECTION) • Is there any malfunction?	Yes	Repair supply pump, go to Step 7. (See F5–82 SUPPLY PUMP INSPECTION)
		No	Go to next step.
5	**INSPECT FUEL PRESSURE SENSOR** • Inspect fuel pressure sensor. (See F5–109 FUEL PRESSURE SENSOR INSPECTION) • Is there any malfunction?	Yes	Replace common rail, go to Step 7. (See F5–82 SUPPLY PUMP REMOVAL/INSTALLATION)
		No	Go to next step.

STEP	INSPECTION		ACTION
6	**INSPECT FUEL INJECTOR** • Inspect fuel injector. (See F5–85 FUEL INJECTOR INSPECTION) • Is there any malfunction?	Yes	Replace fuel injector, go to next step. (See F5–84 FUEL INJECTOR REMOVAL/INSTALLATION)
		No	Go to next step.
7	**VERIFY TROUBLESHOOTING OF DTC P0093 COMPLETED** • Make sure to reconnect all disconnected connectors. • Clear DTC from PCM memory using WDS or equivalent. • Start engine. • Is same DTC present?	Yes	Replace PCM, go to next step. (See F5–94 PCM REMOVAL/INSTALLATION)
		No	Go to next step.
8	**VERIFY AFTER REPAIR PROCEDURE** • Perform “After Repair Procedure”. (See F5–116 AFTER REPAIR PROCEDURE) • Is there any DTC present?	Yes	Go to applicable DTC inspection. (See F5–117 DTC TABLE)
		No	Troubleshooting completed.

End Of Sie

DTC P0097

AME437001082W05

DTC P0097	IAT sensor No.1 circuit low input
DETECTION CONDITION	• PCM monitors input voltage from IAT sensor No.1 while engine is running. If input voltage from IAT sensor No.1 is **below 0.1 V**, PCM determines IAT sensor No.1 circuit low input.
POSSIBLE CAUSE	• IAT sensor No.1 malfunction • Connector or terminal malfunction • Short to GND in wiring between MAF/IAT sensor terminal D and PCM terminal 60 • IAT sensor No.1 signal and GND circuits short each other • PCM malfunction

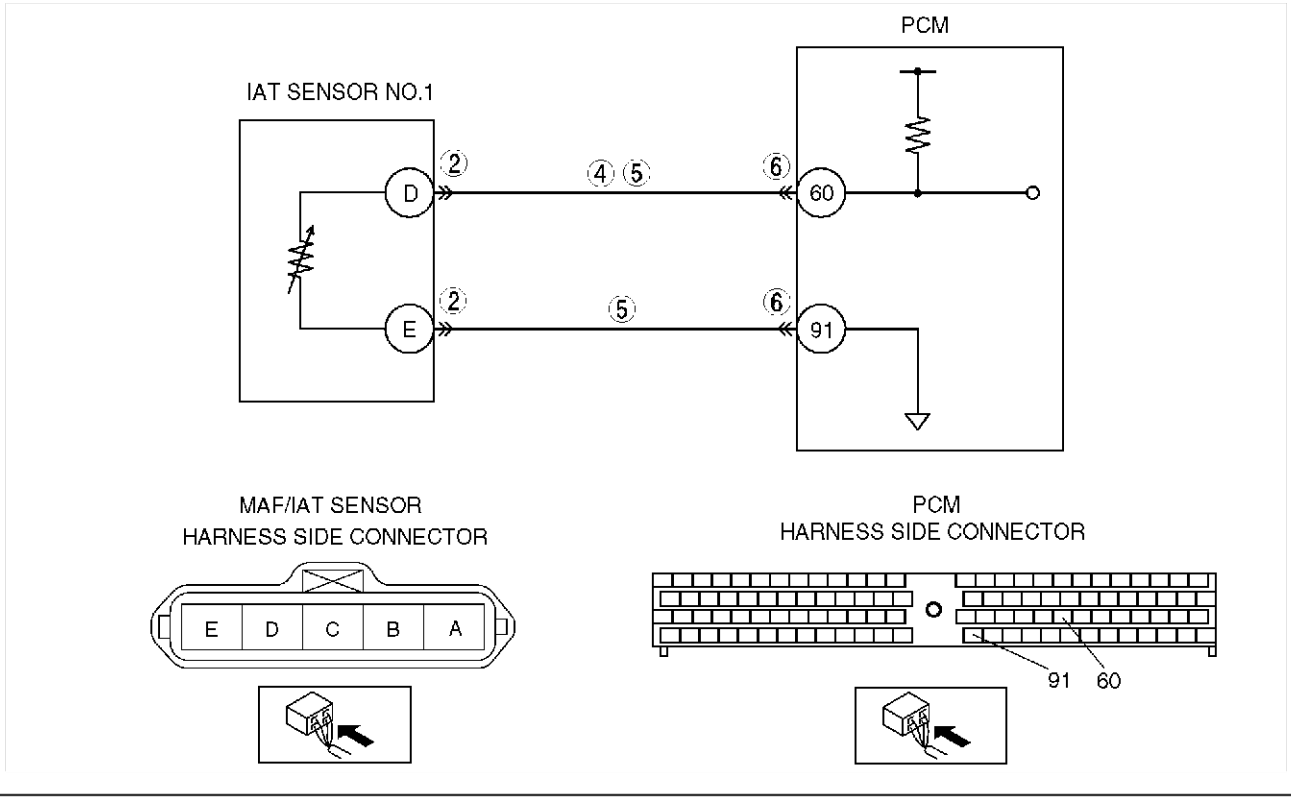

Diagnostic procedure

STEP	INSPECTION		ACTION
1	**PERFORM DTC CONFIRMATION PROCEDURE** • Perform “DTC Confirmation Procedure”. (See F5–115 DTC CONFIRMATION PROCEDURE) • Is same DTC present during KOEO or KOER self-test?	Yes	Go to next step.
		No	Intermittent concern exists. Go to “Intermittent Concern Troubleshooting”. (See F5–195 INTERMITTENT CONCERN TROUBLESHOOTING)
2	**INSPECT POOR CONNECTION OF IAT SENSOR NO.1 CONNECTOR** • Turn engine switch to OFF. • Inspect for poor connection (damaged, pulled-out terminals, corrosion, etc.). • Is there any malfunction?	Yes	Repair or replace suspected terminal, go to Step 7.
		No	Go to next step.
3	**CLASSIFY IAT SENSOR NO.1 MALFUNCTION OR HARNESS MALFUNCTION** • Turn engine switch to ON (Engine OFF). • Disconnect MAF/IAT sensor connector. • Access IAT PID using WDS or equivalent. • Is IAT PID **below 0.1 V**?	Yes	Go to next step.
		No	Replace MAF/IAT sensor, go to Step 7. (See F5–66 INTAKE-AIR SYSTEM REMOVAL/INSTALLATION)
4	**INSPECT IAT SENSOR NO.1 SIGNAL CIRCUIT FOR SHORT TO GND** • Turn engine switch to OFF. • Inspect continuity between MAF/IAT sensor terminal D and body GND. • Is there continuity?	Yes	Repair or replace harness for short to GND, go to Step 7.
		No	Go to next step.
5	**INSPECT IAT SENSOR NO.1 CIRCUIT FOR SHORT WITH EACH OTHER** • Turn engine switch to OFF. • Inspect continuity between MAF/IAT sensor terminals D and E. • Is there continuity?	Yes	Repair or replace harness for short with each other, go to Step 7.
		No	Go to next step.
6	**INSPECT POOR CONNECTION OF PCM CONNECTOR** • Turn engine switch to OFF. • Inspect for poor connection (damaged, pulled-out terminals, corrosion, etc.). • Is there any malfunction?	Yes	Repair or replace suspected terminal, go to next step.
		No	Go to next step.
7	**VERIFY TROUBLESHOOTING OF DTC P0097 COMPLETED** • Make sure to reconnect all disconnected connectors. • Clear DTC from PCM memory using WDS or equivalent. • Perform KOEO/KOER self-test. (See F5–116 KOEO/KOER SELF-TEST procedure) • Is same DTC present?	Yes	Replace PCM, go to next step. (See F5–94 PCM REMOVAL/INSTALLATION)
		No	Go to next step.
8	**VERIFY AFTER REPAIR PROCEDURE** • Perform “After Repair Procedure”. (See F5–116 AFTER REPAIR PROCEDURE) • Is there any DTC present?	Yes	Go to applicable DTC inspection. (See F5–117 DTC TABLE)
		No	Troubleshooting completed.

End Of Ste

DTC P0098

AME437001082W06

DTC P0098	IAT sensor No.1 circuit high input
DETECTION CONDITION	• PCM monitors input voltage from IAT sensor No.1 while engine is running. If input voltage from IAT sensor No.1 is **above 5.0 V**, PCM determines IAT sensor No.1 circuit high input.
POSSIBLE CAUSE	• IAT sensor No.1 malfunction • Connector or terminal malfunction • Short to power circuit in wiring between MAF/IAT sensor terminal D and PCM terminal 60 • Open circuit in wiring between MAF/IAT sensor terminal D and PCM terminal 60 • Open circuit in wiring between MAF/IAT sensor terminal E and PCM terminal 91 • PCM malfunction

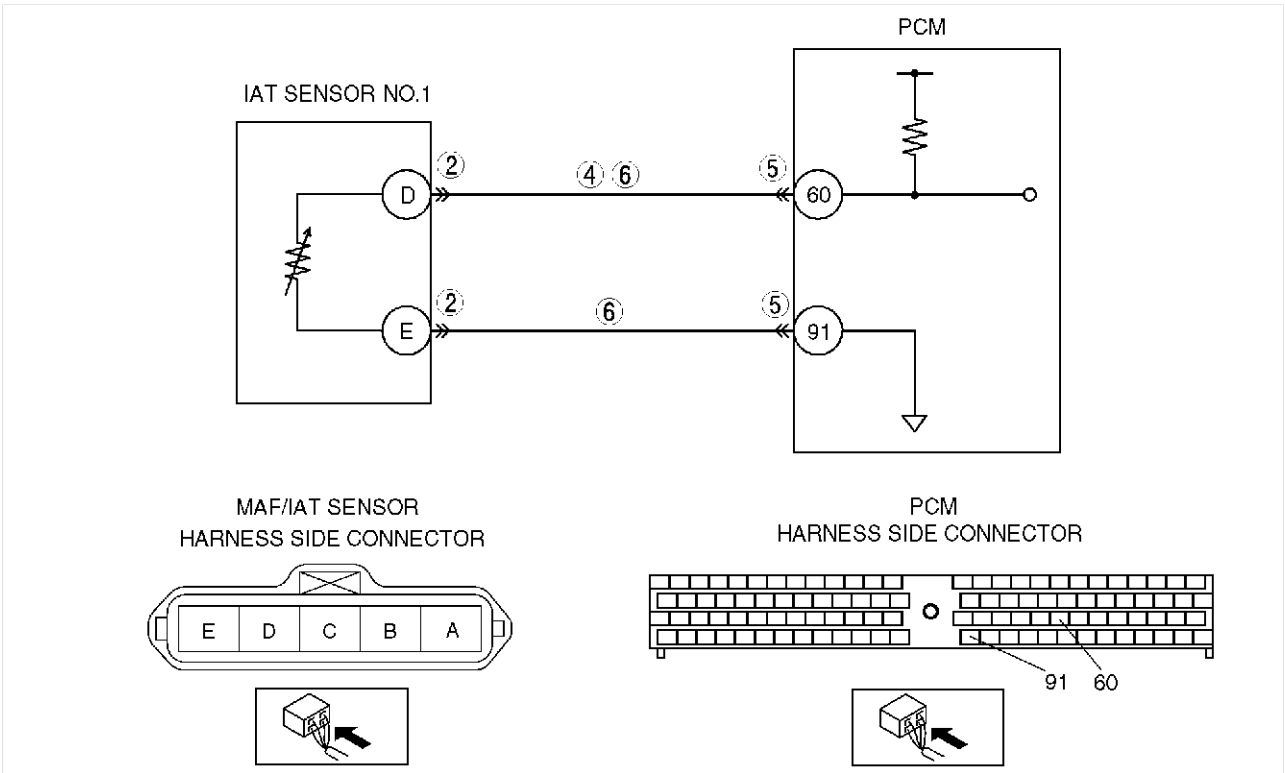

Diagnostic procedure

STEP	INSPECTION		ACTION
1	**PERFORM DTC CONFIRMATION PROCEDURE** • Perform “DTC Confirmation Procedure”. (See F5–115 DTC CONFIRMATION PROCEDURE) • Is same DTC present during KOEO or KOER self-test?	Yes	Go to next step.
		No	Intermittent concern exists. Go to “Intermittent Concern Troubleshooting”. (See F5–195 INTERMITTENT CONCERN TROUBLESHOOTING)
2	**INSPECT POOR CONNECTION OF IAT SENSOR NO.1 CONNECTOR** • Turn engine switch to OFF. • Inspect for poor connection (damaged, pulled-out terminals, corrosion, etc.). • Is there any malfunction?	Yes	Repair or replace suspected terminal, go to Step 7.
		No	Go to next step.

STEP	INSPECTION		ACTION
3	**CLASSIFY IAT SENSOR NO.1 MALFUNCTION OR HARNESS MALFUNCTION** • Turn engine switch to ON (Engine OFF). • Connect jumper wire between MAF/IAT sensor connector terminal D and E. • Access IAT PID using WDS or equivalent. • Is IAT PID **below 1.0 V**?	Yes	Replace MAF/IAT sensor, go to Step 7. (See F5–66 INTAKE-AIR SYSTEM REMOVAL/ INSTALLATION)
		No	Go to next step.
4	**INSPECT IAT SENSOR NO.1 SIGNAL CIRCUIT FOR SHORT TO POWER** • Turn engine switch to ON (Engine OFF). • Inspect voltage between MAF/IAT sensor terminal D and body GND. • Is voltage **below 1.0 V**?	Yes	Go to next step.
		No	Repair or replace harness for short to power, go to Step 7.
5	**INSPECT POOR CONNECTION OF PCM CONNECTOR** • Turn engine switch to OFF. • Inspect for poor connection (damaged, pulled-out terminals, corrosion, etc.). • Is there any malfunction?	Yes	Repair or replace suspected terminal, go to Step 7.
		No	Go to next step.
6	**INSPECT IAT SENSOR NO.1 CIRCUIT FOR OPEN** • Turn engine switch to OFF. • Inspect continuity between following harnesses: — MAF/IAT sensor terminal D and PCM terminal 60. — MAF/IAT sensor terminal E and PCM terminal 91. • Is there continuity?	Yes	Go to next step.
		No	Repair or replace harness for open, go to next step.
7	**VERIFY TROUBLESHOOTING OF DTC P0098 COMPLETED** • Make sure to reconnect all disconnected connectors. • Clear DTC from PCM memory using WDS or equivalent. • Perform KOEO/KOER self-test. (See F5–116 KOEO/KOER SELF-TEST procedure) • Is same DTC present?	Yes	Replace PCM, go to next step. (See F5–94 PCM REMOVAL/INSTALLATION)
		No	Go to next step.
8	**VERIFY AFTER REPAIR PROCEDURE** • Perform “After Repair Procedure”. (See F5–116 AFTER REPAIR PROCEDURE) • Is there any DTC present?	Yes	Go to applicable DTC inspection. (See F5–117 DTC TABLE)
		No	Troubleshooting completed.

End Of Ste

DTC P0102

AME437001082W07

DTC P0102	MAF sensor circuit low input
DETECTION CONDITION	• PCM monitors input voltage from MAF sensor while engine is running. If input voltage from MAF sensor is **below 0.2 V**, PCM determines MAF sensor circuit low input.
POSSIBLE CAUSE	• MAF sensor malfunction • Connector or terminal malfunction • Open circuit in wiring between PCM control relay terminal C and MAF/IAT sensor terminal A • Short to GND in wiring between MAF/IAT sensor terminal C and PCM terminal 9 • MAF sensor signal and GND circuits short each other • Open circuit in wiring between MAF/IAT sensor terminal C and PCM terminal 9 • PCM malfunction

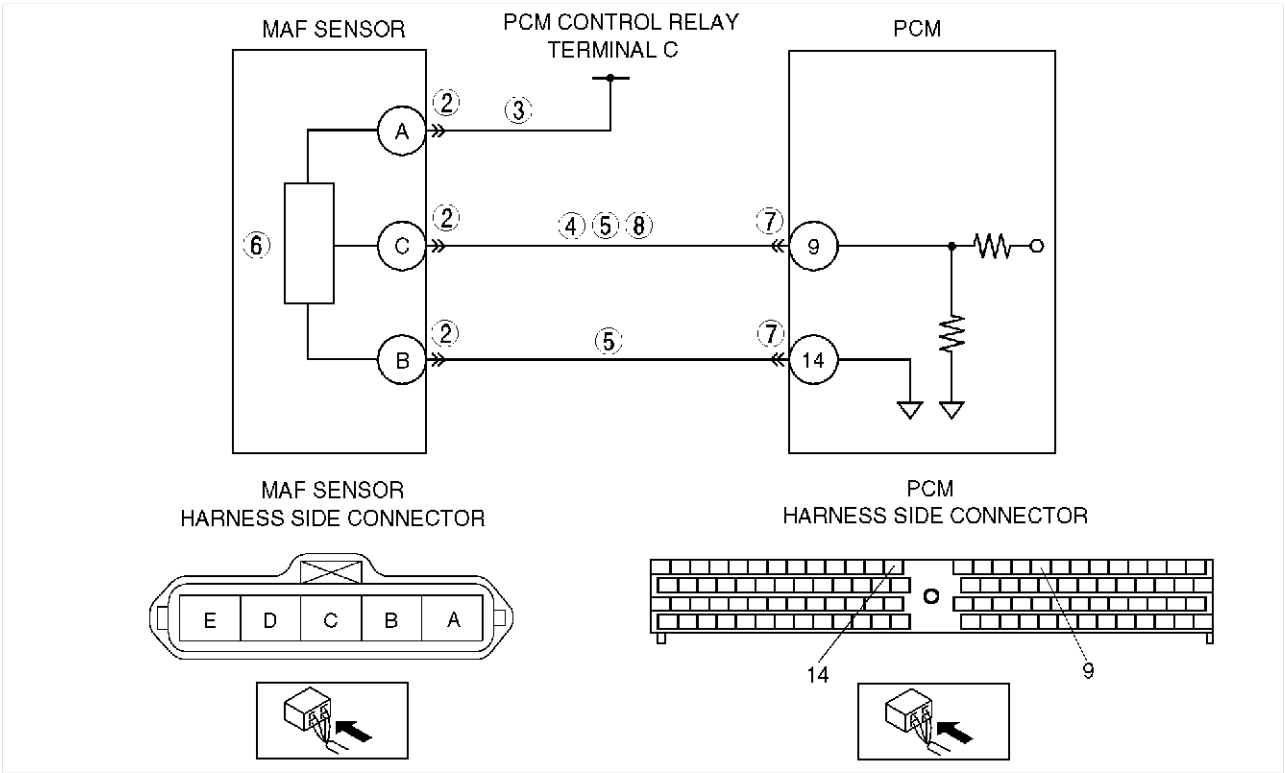

Diagnostic procedure

STEP	INSPECTION		ACTION
1	**PERFORM DTC CONFIRMATION PROCEDURE** • Perform “DTC Confirmation Procedure”. (See F5–115 DTC CONFIRMATION PROCEDURE) • Is same DTC present during KOEO or KOER self-test?	Yes	Go to next step.
		No	Intermittent concern exists. Go to “Intermittent Concern Troubleshooting”. (See F5–195 INTERMITTENT CONCERN TROUBLESHOOTING)
2	**INSPECT POOR CONNECTION OF MAF SENSOR CONNECTOR** • Turn engine switch to OFF. • Inspect for poor connection (damaged, pulled-out terminals, corrosion, etc.). • Is there any malfunction?	Yes	Repair or replace suspected terminal, go to Step 9.
		No	Go to next step.

STEP	INSPECTION		ACTION
3	**INSPECT MAF SENSOR POWER CIRCUIT FOR OPEN** • Turn engine switch to ON. (Engine OFF) • Inspect voltage at MAF/IAT sensor terminal A (harness side). • Is voltage **below 1.0 V**?	Yes	Repair or replace harness for open, go to Step 9.
		No	Go to next step.
4	**INSPECT MAF SENSOR SIGNAL CIRCUIT FOR SHORT TO GND** • Turn engine switch to OFF. • Inspect continuity between MAF/IAT sensor terminal C and body GND. • Is there continuity?	Yes	Repair or replace harness for short to GND, go to Step 9.
		No	Go to next step.
5	**INSPECT MAF SENSOR CIRCUIT FOR SHORT WITH EACH OTHER** • Turn engine switch to OFF. • Inspect continuity between MAF/IAT sensor terminals C and B. • Is there continuity?	Yes	Repair or replace harness for short with each other, go to Step 9.
		No	Go to next step.
6	**INSPECT MAF SENSOR** • Inspect MAF sensor. (See F5–104 MASS AIR FLOW (MAF)/ INTAKE AIR TEMPERATURE (IAT) SENSOR INSPECTION) • Is there any malfunction?	Yes	Replace MAF/IAT sensor, go to Step 9. (See F5–66 INTAKE-AIR SYSTEM REMOVAL/ INSTALLATION)
		No	Go to next step.
7	**INSPECT POOR CONNECTION OF PCM CONNECTOR** • Turn engine switch to OFF. • Inspect for poor connection (damaged, pulled-out terminals, corrosion, etc.). • Is there any malfunction?	Yes	Repair or replace suspected terminal, go to Step 9.
		No	Go to next step.
8	**INSPECT MAF SENSOR SIGNAL CIRCUIT FOR OPEN** • Turn engine switch to OFF. • Inspect continuity between MAF/IAT sensor terminal C and PCM terminal 9. • Is there continuity?	Yes	Go to next step.
		No	Repair or replace harness for open, go to next step.
9	**VERIFY TROUBLESHOOTING OF DTC P0102 COMPLETED** • Make sure to reconnect all disconnected connectors. • Clear DTC from PCM memory using WDS or equivalent. • Perform KOEO/KOER self-test. (See F5–116 KOEO/KOER SELF-TEST procedure) • Is same DTC present?	Yes	Replace PCM, go to next step. (See F5–94 PCM REMOVAL/INSTALLATION)
		No	Go to next step.
10	**VERIFY AFTER REPAIR PROCEDURE** • Perform “After Repair Procedure”. (See F5–116 AFTER REPAIR PROCEDURE) • Is there any DTC present?	Yes	Go to applicable DTC inspection. (See F5–117 DTC TABLE)
		No	Troubleshooting completed.

End Of Sta

DTC P0103

AME437001082W08

DTC P0103	MAF sensor circuit high input
DETECTION CONDITION	• PCM monitors input voltage from MAF sensor while engine is running. If input voltage from MAF sensor is **above 4.9 V**, PCM determines MAF sensor circuit high input.
POSSIBLE CAUSE	• MAF sensor malfunction • Connector or terminal malfunction • Short to power circuit in wiring between MAF/IAT sensor terminal C and PCM terminal 9 • MAF sensor power and signal circuits short each other • Open circuit in wiring between MAF/IAT sensor terminal B and PCM terminal 14 • PCM malfunction

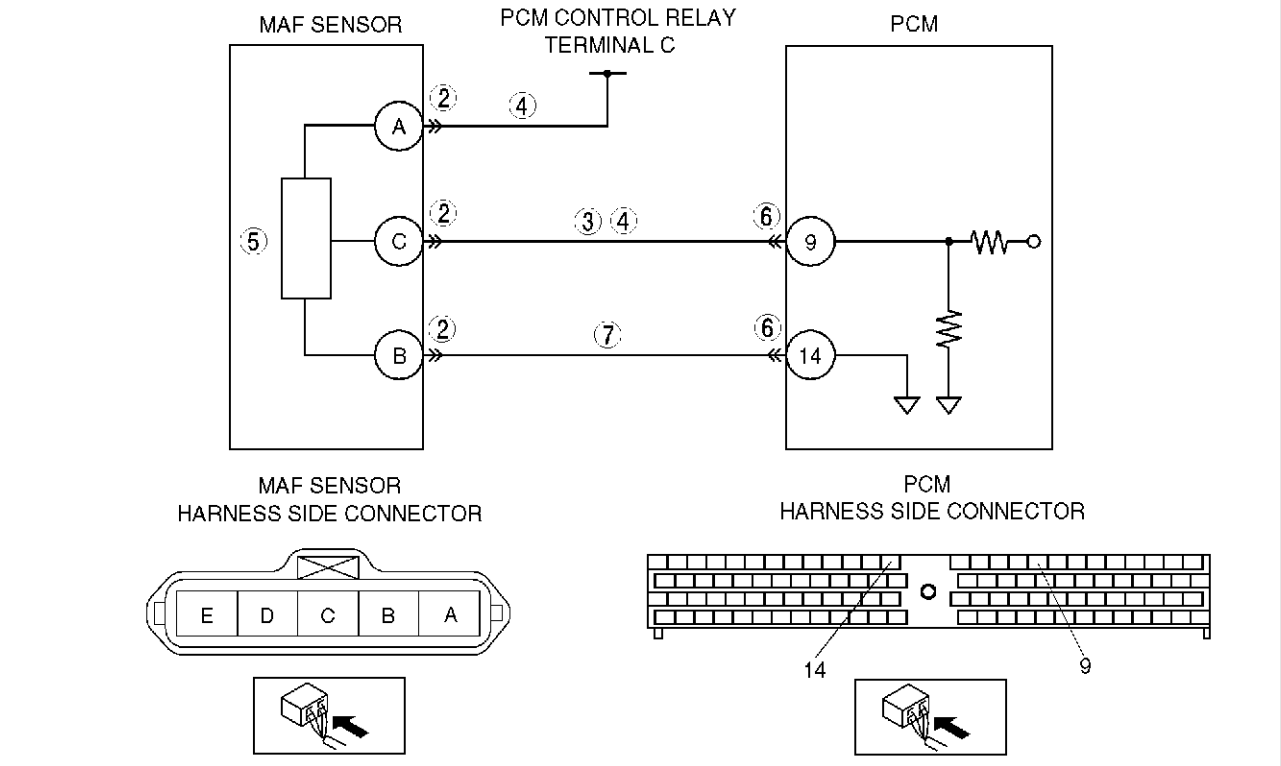

Diagnostic procedure

STEP	INSPECTION		ACTION
1	**PERFORM DTC CONFIRMATION PROCEDURE** • Perform “DTC Confirmation Procedure”. (See F5–115 DTC CONFIRMATION PROCEDURE) • Is same DTC present during KOEO or KOER self-test?	Yes	Go to next step.
		No	Intermittent concern exists. Go to “Intermittent Concern Troubleshooting”. (See F5–195 INTERMITTENT CONCERN TROUBLESHOOTING)
2	**INSPECT POOR CONNECTION OF MAF SENSOR CONNECTOR** • Turn engine switch to OFF. • Inspect for poor connection (damaged, pulled-out terminals, corrosion, etc.). • Is there any malfunction?	Yes	Repair or replace suspected terminal, go to Step 8.
		No	Go to next step.

STEP	INSPECTION		ACTION
3	**INSPECT MAF SENSOR SIGNAL CIRCUIT FOR SHORT TO POWER** • Turn engine switch to ON. (Engine OFF) • Inspect voltage between MAF/IAT sensor terminal C and body GND. • Is voltage **below 1.0 V**?	Yes	Go to next step.
		No	Repair or replace harness for short to power, go to Step 8.
4	**INSPECT MAF SENSOR CIRCUIT FOR SHORT WITH EACH OTHER** • Turn engine switch to OFF. • Inspect continuity between MAF/IAT sensor terminals A and C. • Is there continuity?	Yes	Repair or replace harness for short with each other, go to Step 8.
		No	Go to next step.
5	**INSPECT MAF SENSOR** • Inspect MAF sensor. (See F5–104 MASS AIR FLOW (MAF)/ INTAKE AIR TEMPERATURE (IAT) SENSOR INSPECTION) • Is there any malfunction?	Yes	Replace MAF/IAT sensor, go to Step 8. (See F5–66 INTAKE-AIR SYSTEM REMOVAL/ INSTALLATION)
		No	Go to next step.
6	**INSPECT POOR CONNECTION OF PCM CONNECTOR** • Turn engine switch to OFF. • Inspect for poor connection (damaged, pulled-out terminals, corrosion, etc.). • Is there any malfunction?	Yes	Repair or replace suspected terminal, go to Step 8.
		No	Go to next step.
7	**INSPECT MAF SENSOR GND CIRCUIT FOR OPEN** • Turn engine switch to OFF. • Inspect continuity between MAF/IAT sensor terminal B and PCM terminal 14. • Is there continuity?	Yes	Go to next step.
		No	Repair or replace harness for open, go to next step.
8	**VERIFY TROUBLESHOOTING OF DTC P0103 COMPLETED** • Make sure to reconnect all disconnected connectors. • Clear DTC from PCM memory using WDS or equivalent. • Perform KOEO/KOER self-test. (See F5–116 KOEO/KOER SELF-TEST procedure) • Is same DTC present?	Yes	Replace PCM, go to next step. (See F5–94 PCM REMOVAL/INSTALLATION)
		No	Go to next step.
9	**VERIFY AFTER REPAIR PROCEDURE** • Perform “After Repair Procedure”. (See F5–116 AFTER REPAIR PROCEDURE) • Is there any DTC present?	Yes	Go to applicable DTC inspection. (See F5–117 DTC TABLE)
		No	Troubleshooting completed.

End Of Ste

DTC P0107

AME437001082W09

DTC P0107	Boost sensor circuit low input
DETECTION CONDITION	• PCM monitors input voltage from boost sensor while engine is running. If input voltage from boost sensor is **below 1.9 V** when engine speed is **2,400 rpm or above** and accelerator opening angle is **50% or above**, PCM determines boost sensor circuit low input.
POSSIBLE CAUSE	• Boost sensor malfunction • Connector or terminal malfunction • Short to GND in wiring between boost sensor terminal C and PCM terminal 90 • Open circuit in wiring between boost sensor terminal C and PCM terminal 90 • Short to GND in wiring between boost sensor terminal B and PCM terminal 36 • Boost sensor signal and GND circuits short each other • PCM malfunction

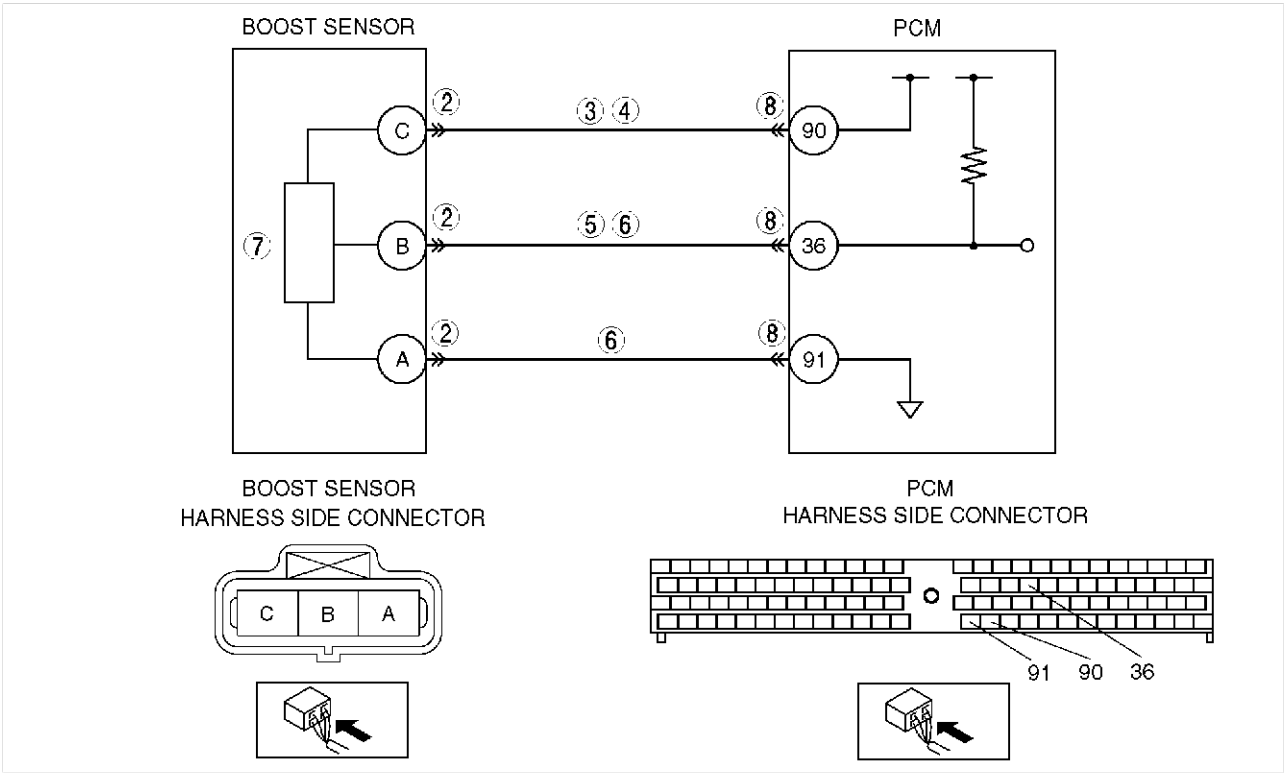

Diagnostic procedure

STEP	INSPECTION		ACTION
1	**PERFORM DTC CONFIRMATION PROCEDURE** • Perform “DTC Confirmation Procedure”. (See F5–115 DTC CONFIRMATION PROCEDURE) • Is same DTC present during KOEO or KOER self-test?	Yes	Go to next step.
		No	Intermittent concern exists. Go to “Intermittent Concern Troubleshooting”. (See F5–195 INTERMITTENT CONCERN TROUBLESHOOTING)
2	**INSPECT POOR CONNECTION OF BOOST SENSOR CONNECTOR** • Turn engine switch to OFF. • Inspect for poor connection (damaged, pulled-out terminals, corrosion, etc.). • Is there any malfunction?	Yes	Repair or replace suspected terminal, go to Step 9.
		No	Go to next step.

STEP	INSPECTION		ACTION
3	**INSPECT BOOST SENSOR SIGNAL CIRCUIT FOR SHORT TO GND** • Turn engine switch to OFF. • Inspect continuity between boost sensor terminal C and body GND. • Is there continuity?	Yes	Repair or replace harness for short to GND, go to Step 9.
		No	Go to next step.
4	**INSPECT BOOST SENSOR POWER CIRCUIT FOR OPEN** • Turn engine switch to ON. (Engine OFF) • Inspect voltage at boost sensor terminal C (harness side). • Is voltage **below 1.0 V**?	Yes	Repair or replace harness for open, go to Step 9.
		No	Go to next step.
5	**INSPECT BOOST SENSOR SIGNAL CIRCUIT FOR SHORT TO GND** • Turn engine switch to OFF. • Inspect continuity between boost sensor terminal B and body GND. • Is there continuity?	Yes	Repair or replace harness for short to GND, go to Step 9.
		No	Go to next step.
6	**INSPECT BOOST SENSOR CIRCUIT FOR SHORT WITH EACH OTHER** • Turn engine switch to OFF. • Inspect continuity between boost sensor terminals B and A. • Is there continuity?	Yes	Repair or replace harness for short with each other, go to Step 9.
		No	Go to next step.
7	**INSPECT BOOST SENSOR** • Inspect boost sensor. (See F5–108 BOOST SENSOR INSPECTION) • Is there any malfunction?	Yes	Replace boost sensor, go to Step 9. (See F5–66 INTAKE-AIR SYSTEM REMOVAL/INSTALLATION)
		No	Go to next step.
8	**INSPECT POOR CONNECTION OF PCM CONNECTOR** • Turn engine switch to OFF. • Inspect for poor connection (damaged, pulled-out terminals, corrosion, etc.). • Is there any malfunction?	Yes	Repair or replace suspected terminal, go to next step.
		No	Go to next step.
9	**VERIFY TROUBLESHOOTING OF DTC P0107 COMPLETED** • Make sure to reconnect all disconnected connectors. • Clear DTC from PCM memory using WDS or equivalent. • Perform KOEO/KOER self-test. (See F5–116 KOEO/KOER SELF-TEST procedure) • Is same DTC present?	Yes	Replace PCM, go to next step. (See F5–94 PCM REMOVAL/INSTALLATION)
		No	Go to next step.
10	**VERIFY AFTER REPAIR PROCEDURE** • Perform “After Repair Procedure”. (See F5–116 AFTER REPAIR PROCEDURE) • Is there any DTC present?	Yes	Go to applicable DTC inspection. (See F5–117 DTC TABLE)
		No	Troubleshooting completed.

End Of Sta

DTC P0108

AME437001082W10

DTC P0108	Boost sensor circuit high input
DETECTION CONDITION	• PCM monitors input voltage from boost sensor while engine is running. If input voltage from boost sensor is **above 4.9 V**, PCM determines boost sensor circuit high input.
POSSIBLE CAUSE	• Boost sensor malfunction • Connector or terminal malfunction • Boost sensor power and signal wiring short each other • Open circuit in wiring between boost sensor terminal B and PCM terminal 36 • Open circuit in wiring between boost sensor terminal A and PCM terminal 91 • PCM malfunction

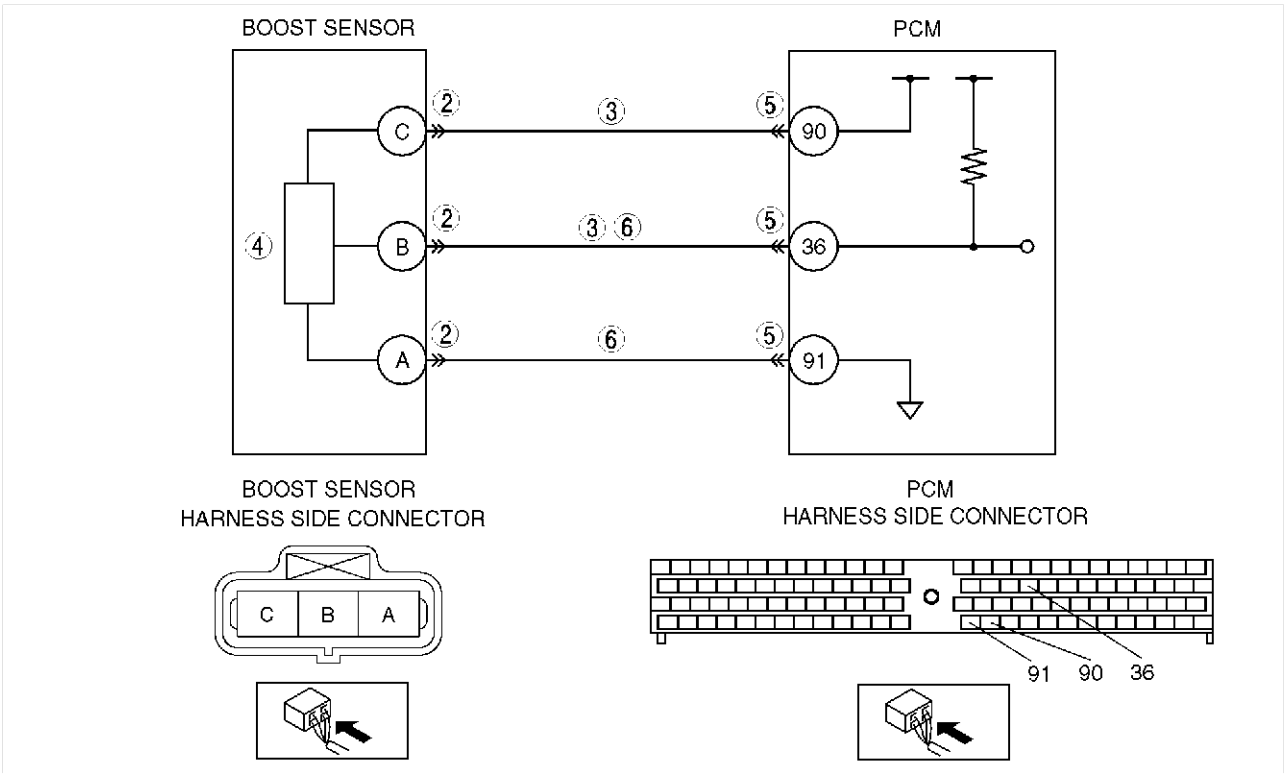

Diagnostic procedure

STEP	INSPECTION		ACTION
1	**PERFORM DTC CONFIRMATION PROCEDURE** • Perform “DTC Confirmation Procedure”. (See F5–115 DTC CONFIRMATION PROCEDURE) • Is same DTC present during KOEO or KOER self-test?	Yes	Go to next step.
		No	Intermittent concern exists. Go to “Intermittent Concern Troubleshooting”. (See F5–195 INTERMITTENT CONCERN TROUBLESHOOTING)

STEP	INSPECTION		ACTION
2	**INSPECT POOR CONNECTION OF BOOST SENSOR CONNECTOR** • Turn engine switch to OFF. • Inspect for poor connection (damaged, pulled-out terminals, corrosion, etc.). • Is there any malfunction?	Yes	Repair or replace suspected terminal, go to Step 7.
		No	Go to next step.
3	**INSPECT BOOST SENSOR CIRCUIT FOR SHORT WITH EACH OTHER** • Turn engine switch to OFF. • Inspect continuity between boost sensor terminals C and B • Is there continuity?	Yes	Repair or replace harness for short with each other, go to Step 7.
		No	Go to next step.
4	**INSPECT BOOST SENSOR** • Inspect boost sensor. (See F5–108 BOOST SENSOR INSPECTION) • Is there any malfunction?	Yes	Replace boost sensor, go to Step 7. (See F5–66 INTAKE-AIR SYSTEM REMOVAL/INSTALLATION)
		No	Go to next step.
5	**INSPECT POOR CONNECTION OF PCM CONNECTOR** • Turn engine switch to OFF. • Inspect for poor connection (damaged, pulled-out terminals, corrosion, etc.). • Is there any malfunction?	Yes	Repair or replace suspected terminal, go to Step 7.
		No	Go to next step.
6	**INSPECT BOOST SENSOR CIRCUIT FOR OPEN** • Turn engine switch to OFF. • Inspect continuity between following harnesses: — Boost sensor terminal B and PCM terminal 36. — Boost sensor terminal A and PCM terminal 91. • Is there continuity?	Yes	Go to next step.
		No	Repair or replace harness for open, go to next step.
7	**VERIFY TROUBLESHOOTING OF DTC P0108 COMPLETED** • Make sure to reconnect all disconnected connectors. • Clear DTC from PCM memory using WDS or equivalent. • Perform KOEO/KOER self-test. (See F5–116 KOEO/KOER SELF-TEST procedure) • Is same DTC present?	Yes	Replace PCM, go to next step. (See F5–94 PCM REMOVAL/INSTALLATION)
		No	Go to next step.
8	**VERIFY AFTER REPAIR PROCEDURE** • Perform “After Repair Procedure”. (See F5–116 AFTER REPAIR PROCEDURE) • Is there any DTC present?	Yes	Go to applicable DTC inspection. (See F5–117 DTC TABLE)
		No	Troubleshooting completed.

End Of Sto

F5

DTC P0112

AME437001082W13

DTC P0112	IAT sensor No.2 circuit low input
DETECTION CONDITION	• PCM monitors input voltage from IAT sensor No.2 while engine is running. If input voltage from IAT sensor No.2 is **below 0.1 V**, PCM determines IAT sensor No.2 circuit low input.
POSSIBLE CAUSE	• IAT sensor No.2 malfunction • Connector or terminal malfunction • Short to GND in wiring between IAT sensor No.2 terminal A and PCM terminal 8 • IAT sensor No.2 signal and GND circuits short each other • PCM malfunction

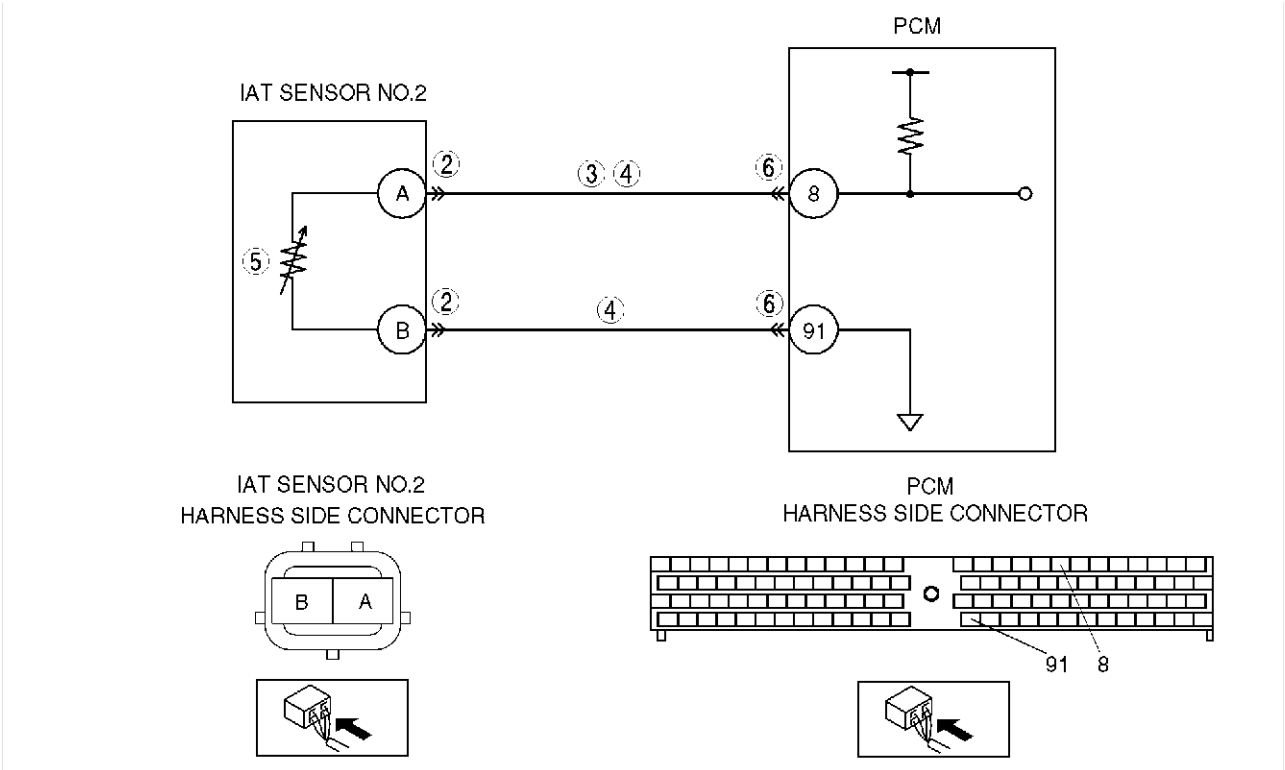

Diagnostic procedure

STEP	INSPECTION		ACTION
1	**PERFORM DTC CONFIRMATION PROCEDURE** • Perform “DTC Confirmation Procedure”. (See F5–115 DTC CONFIRMATION PROCEDURE) • Is same DTC present during KOEO or KOER self-test?	Yes	Go to next step.
		No	Intermittent concern exists. Go to “Intermittent Concern Troubleshooting”. (See F5–195 INTERMITTENT CONCERN TROUBLESHOOTING)

STEP	INSPECTION		ACTION
2	**INSPECT POOR CONNECTION OF IAT SENSOR NO.2 CONNECTOR** • Turn engine switch to OFF. • Inspect for poor connection (damaged, pulled-out terminals, corrosion, etc.). • Is there any malfunction?	Yes	Repair or replace suspected terminal, go to Step 7.
		No	Go to next step.
3	**INSPECT IAT SENSOR NO.2 SIGNAL CIRCUIT FOR SHORT TO GND** • Turn engine switch to OFF. • Inspect continuity between IAT sensor No.2 terminal A and body GND. • Is there continuity?	Yes	Repair or replace harness for short to GND, go to Step 7.
		No	Go to next step.
4	**INSPECT IAT SENSOR NO.2 CIRCUIT FOR SHORT WITH EACH OTHER** • Turn engine switch to OFF. • Inspect continuity between IAT sensor No.2 terminals A and B. • Is there continuity?	Yes	Repair or replace harness for short with each other, go to Step 7.
		No	Go to next step.
5	**INSPECT IAT SENSOR NO.2** • Inspect IAT sensor No.2. (See F5–105 INTAKE AIR TEMPERATURE (IAT) SENSOR NO.2 INSPECTION) • Is there any malfunction?	Yes	Replace IAT sensor No.2, go to next Step 7. (See F5–66 INTAKE-AIR SYSTEM REMOVAL/INSTALLATION)
		No	Go to next step.
6	**INSPECT POOR CONNECTION OF PCM CONNECTOR** • Turn engine switch to OFF. • Inspect for poor connection (damaged, pulled-out terminals, corrosion, etc.). • Is there any malfunction?	Yes	Repair or replace suspected terminal, go to next step.
		No	Go to next step.
7	**VERIFY TROUBLESHOOTING OF DTC P0112 COMPLETED** • Make sure to reconnect all disconnected connectors. • Clear DTC from PCM memory using WDS or equivalent. • Perform KOEO/KOER self-test. (See F5–116 KOEO/KOER SELF-TEST procedure) • Is same DTC present?	Yes	Replace PCM, go to next step. (See F5–94 PCM REMOVAL/INSTALLATION)
		No	Go to next step.
8	**VERIFY AFTER REPAIR PROCEDURE** • Perform “After Repair Procedure”. (See F5–116 AFTER REPAIR PROCEDURE) • Is there any DTC present?	Yes	Go to applicable DTC inspection. (See F5–117 DTC TABLE)
		No	Troubleshooting completed.

End Of Sta

DTC P0113

AME437001082W14

DTC P0113	IAT sensor No.2 circuit high input
DETECTION CONDITION	• PCM monitors input voltage from IAT sensor No.2 while engine is running. If input voltage from IAT sensor No.2 is **above 5.0 V**, PCM determines IAT sensor No.2 circuit high input.
POSSIBLE CAUSE	• IAT sensor No.2 malfunction • Connector or terminal malfunction • Short to power circuit in wiring between IAT sensor No.2 terminal A and PCM terminal 8 • Open circuit in wiring between IAT sensor No.2 terminal A and PCM terminal 8 • Open circuit in wiring between IAT sensor No.2 terminal B and PCM terminal 91 • PCM malfunction

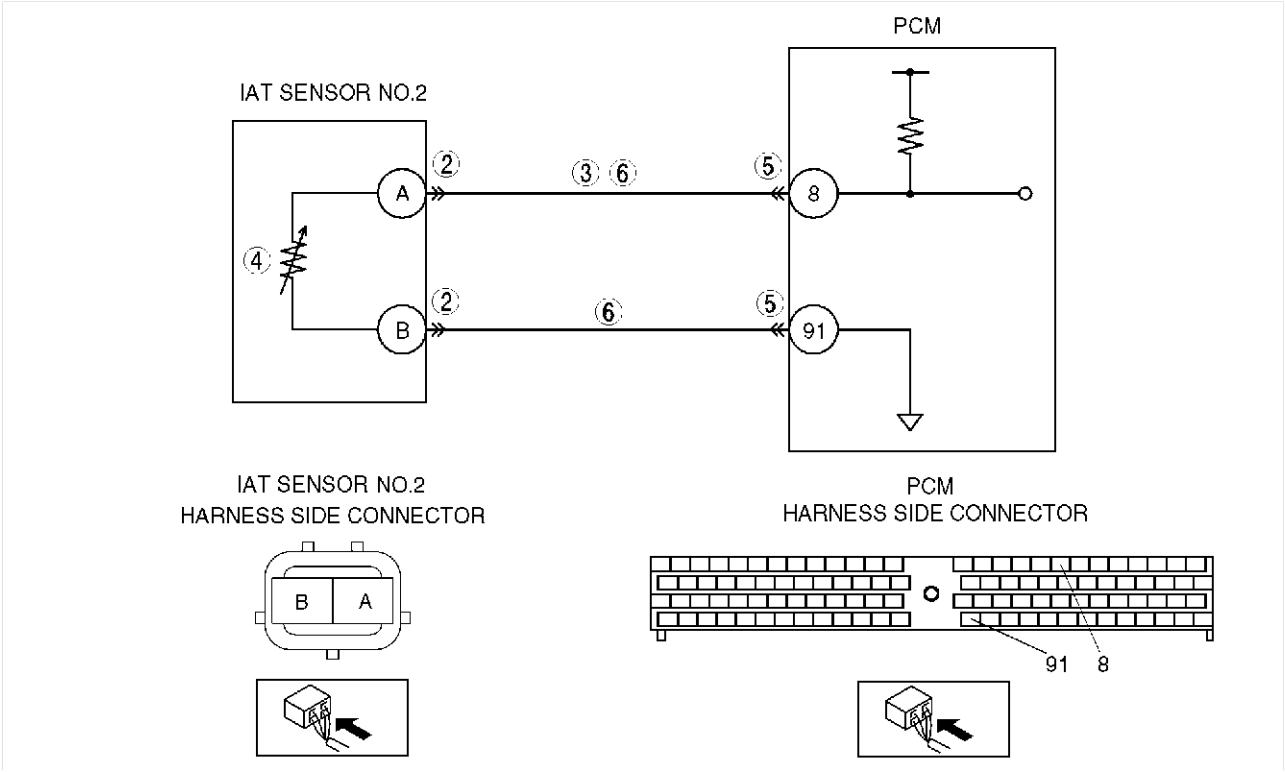

Diagnostic procedure

STEP	INSPECTION		ACTION
1	**PERFORM DTC CONFIRMATION PROCEDURE** • Perform “DTC Confirmation Procedure”. (See F5–115 DTC CONFIRMATION PROCEDURE) • Is same DTC present during KOEO or KOER self-test?	Yes	Go to next step.
		No	Intermittent concern exists. Go to “Intermittent Concern Troubleshooting”. (See F5–195 INTERMITTENT CONCERN TROUBLESHOOTING)

STEP	INSPECTION		ACTION
2	**INSPECT POOR CONNECTION OF IAT SENSOR NO.2 CONNECTOR** • Turn engine switch to OFF. • Inspect for poor connection (damaged, pulled-out terminals, corrosion, etc.). • Is there any malfunction?	Yes	Repair or replace suspected terminal, go to Step 7.
		No	Go to next step.
3	**INSPECT IAT SENSOR NO.2 SIGNAL CIRCUIT FOR SHORT TO POWER** • Turn engine switch to ON (Engine OFF). • Inspect voltage between IAT sensor No.2 terminal A and body GND. • Is voltage **below 1.0 V**?	Yes	Go to next step.
		No	Repair or replace harness for short to power, go to Step 7.
4	**INSPECT IAT SENSOR NO.2** • Inspect IAT sensor No.2. (See F5–105 INTAKE AIR TEMPERATURE (IAT) SENSOR NO.2 INSPECTION) • Is there any malfunction?	Yes	Replace IAT sensor No.2, go to Step 7. (See F5–66 INTAKE-AIR SYSTEM REMOVAL/INSTALLATION)
		No	Go to next step.
5	**INSPECT POOR CONNECTION OF PCM CONNECTOR** • Turn engine switch to OFF. • Inspect for poor connection (damaged, pulled-out terminals, corrosion, etc.). • Is there any malfunction?	Yes	Repair or replace suspected terminal, go to Step 7.
		No	Go to next step.
6	**INSPECT IAT SENSOR NO.2 CIRCUIT FOR OPEN** • Turn engine switch to OFF. • Inspect continuity between following harnesses: — IAT sensor No.2 terminal A and PCM terminal 8. — IAT sensor No.2 terminal B and PCM terminal 91. • Is there continuity?	Yes	Go to next step.
		No	Repair or replace harness for open, go to next step.
7	**VERIFY TROUBLESHOOTING OF DTC P0113 COMPLETED** • Make sure to reconnect all disconnected connectors. • Clear DTC from PCM memory using WDS or equivalent. • Perform KOEO/KOER self-test. (See F5–116 KOEO/KOER SELF-TEST procedure) • Is same DTC present?	Yes	Replace PCM, go to next step. (See F5–94 PCM REMOVAL/INSTALLATION)
		No	Go to next step.
8	**VERIFY AFTER REPAIR PROCEDURE** • Perform “After Repair Procedure”. (See F5–116 AFTER REPAIR PROCEDURE) • Is there any DTC present?	Yes	Go to applicable DTC inspection. (See F5–117 DTC TABLE)
		No	Troubleshooting completed.

End Of Sie

DTC P0117

AME437001082W15

DTC P0117	ECT sensor circuit low input
DETECTION CONDITION	• PCM monitors input voltage from ECT sensor while engine is running. If input voltage from ECT sensor is **below 0.1 V**, PCM determines ECT sensor circuit low input.
POSSIBLE CAUSE	• ECT sensor malfunction • Connector or terminal malfunction • Short to GND in wiring between ECT sensor terminal A and PCM terminal 87 • ECT sensor signal and GND circuits short each other • PCM malfunction

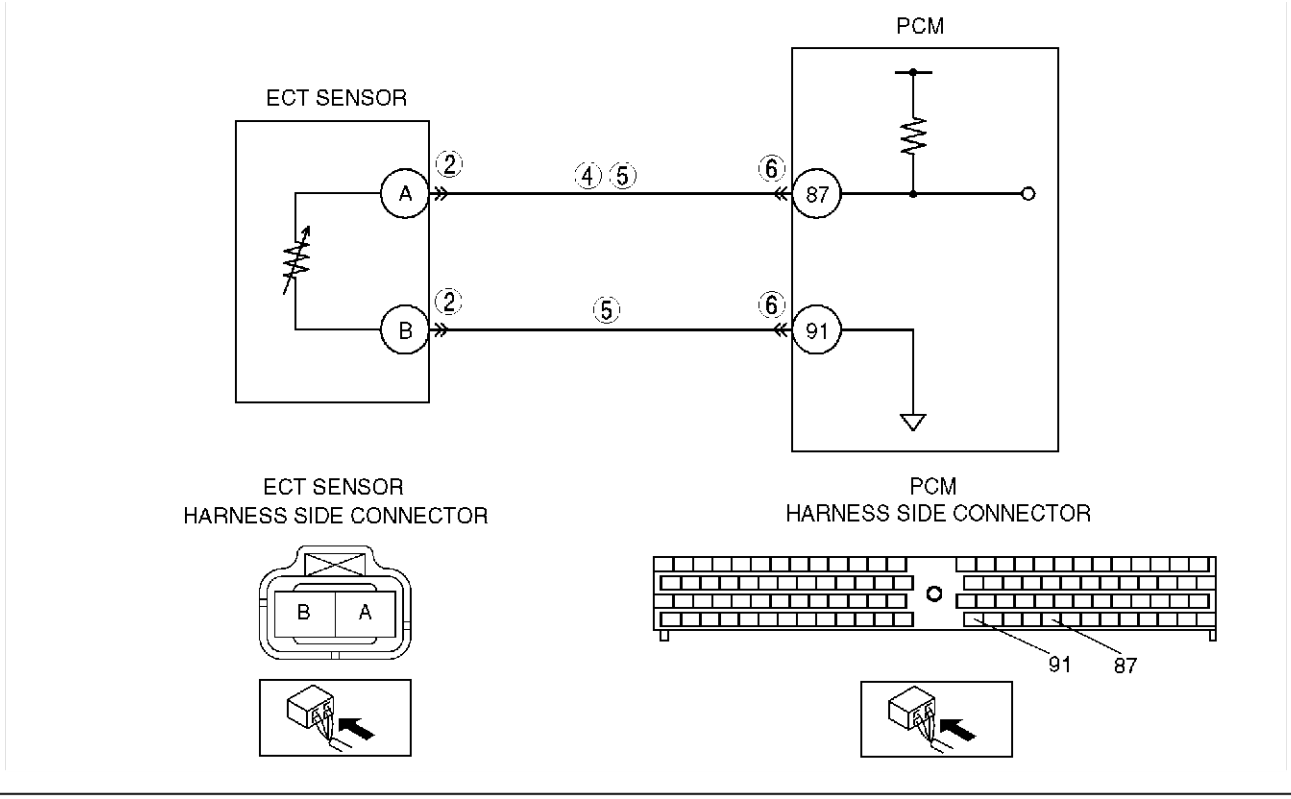

Diagnostic procedure

STEP	INSPECTION		ACTION
1	**PERFORM DTC CONFIRMATION PROCEDURE** • Perform “DTC Confirmation Procedure”. (See F5–115 DTC CONFIRMATION PROCEDURE) • Is same DTC present during KOEO or KOER self-test?	Yes	Go to next step.
		No	Intermittent concern exists. Go to “Intermittent Concern Troubleshooting”. (See F5–195 INTERMITTENT CONCERN TROUBLESHOOTING)

STEP	INSPECTION		ACTION
2	**INSPECT POOR CONNECTION OF ECT SENSOR CONNECTOR** • Turn engine switch to OFF. • Inspect for poor connection (damaged, pulled-out terminals, corrosion, etc.). • Is there any malfunction?	Yes	Repair or replace suspected terminal, go to Step 7.
		No	Go to next step.
3	**CLASSIFY ECT SENSOR MALFUNCTION OR HARNESS MALFUNCTION** • Turn engine switch to ON (Engine OFF). • Disconnect ECT sensor connector. • Access ECT PID using WDS or equivalent. • Is ECT PID **below 0.1 V**?	Yes	Go to next step.
		No	Replace ECT sensor, go to Step 7. (See F5–106 ENGINE COOLANT TEMPERATURE (ECT) SENSOR REMOVAL/INSTALLATION)
4	**INSPECT ECT SENSOR SIGNAL CIRCUIT FOR SHORT TO GND** • Turn engine switch to OFF. • Inspect continuity between ECT sensor terminal A and body GND. • Is there continuity?	Yes	Repair or replace harness for short to GND, go to Step 7.
		No	Go to next step.
5	**INSPECT ECT SENSOR CIRCUIT FOR SHORT WITH EACH OTHER** • Turn engine switch to OFF. • Inspect continuity between ECT sensor terminals A and B. • Is there continuity?	Yes	Repair or replace harness for short with each other, go to Step 7.
		No	Go to next step.
6	**INSPECT POOR CONNECTION OF PCM CONNECTOR** • Turn engine switch to OFF. • Inspect for poor connection (damaged, pulled-out terminals, corrosion, etc.). • Is there any malfunction?	Yes	Repair or replace suspected terminal, go to next step.
		No	Go to next step.
7	**VERIFY TROUBLESHOOTING OF DTC P0117 COMPLETED** • Make sure to reconnect all disconnected connectors. • Clear DTC from PCM memory using WDS or equivalent. • Perform KOEO/KOER self-test. (See F5–116 KOEO/KOER SELF-TEST procedure) • Is same DTC present?	Yes	Replace PCM, go to next step. (See F5–94 PCM REMOVAL/INSTALLATION)
		No	Go to next step.
8	**VERIFY AFTER REPAIR PROCEDURE** • Perform “After Repair Procedure”. (See F5–116 AFTER REPAIR PROCEDURE) • Is there any DTC present?	Yes	Go to applicable DTC inspection. (See F5–117 DTC TABLE)
		No	Troubleshooting completed.

End Of Ste

DTC P0118

AME437001082W16

DTC P0118	ECT sensor circuit high input
DETECTION CONDITION	• PCM monitors input voltage from ECT sensor while engine is running. If input voltage from ECT sensor is **above 5.0 V**, PCM determines ECT sensor circuit high input.
POSSIBLE CAUSE	• ECT sensor malfunction • Connector or terminal malfunction • Short to power circuit in wiring between ECT sensor terminal A and PCM terminal 87 • Open circuit in wiring between ECT sensor terminal A and PCM terminal 87 • Open circuit in wiring between ECT sensor terminal B and PCM terminal 91 • PCM malfunction

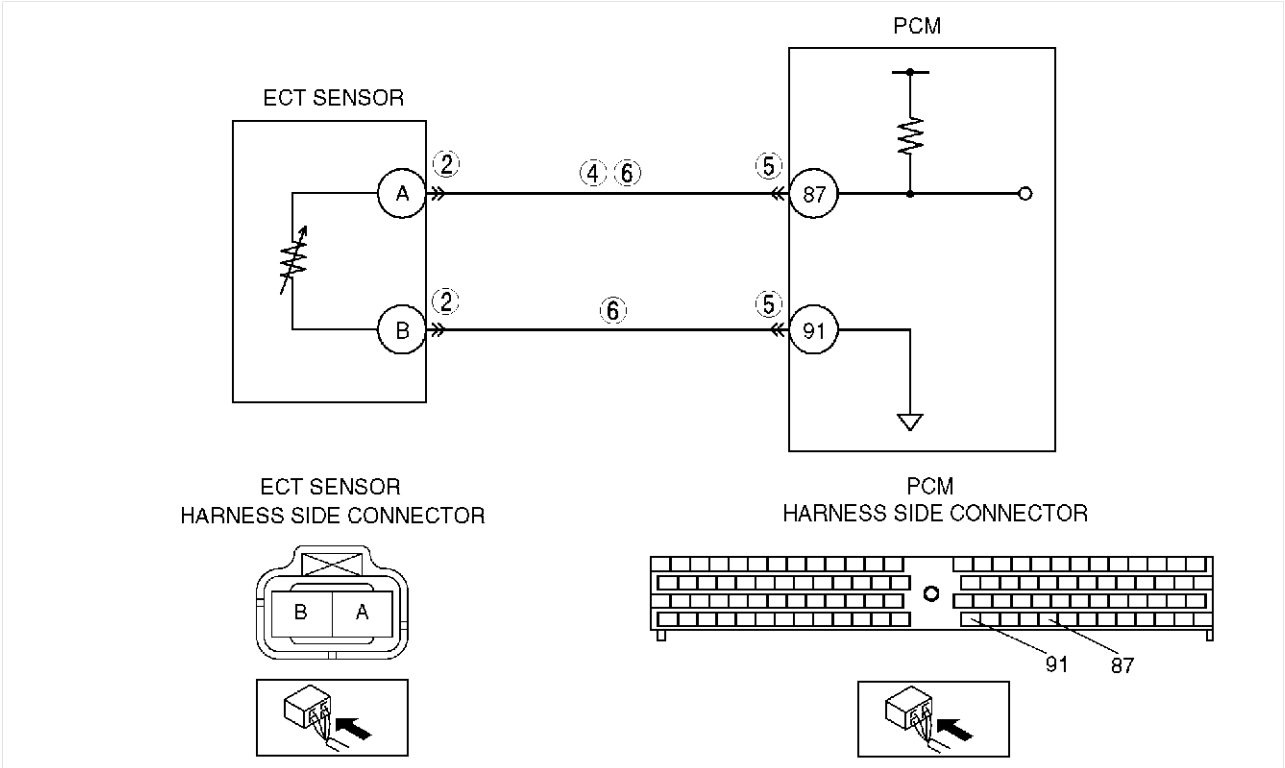

Diagnostic procedure

STEP	INSPECTION		ACTION
1	**PERFORM DTC CONFIRMATION PROCEDURE** • Perform “DTC Confirmation Procedure”. (See F5–115 DTC CONFIRMATION PROCEDURE) • Is same DTC present during KOEO or KOER self-test?	Yes	Go to next step.
		No	Intermittent concern exists. Go to “Intermittent Concern Troubleshooting”. (See F5–195 INTERMITTENT CONCERN TROUBLESHOOTING)
2	**INSPECT POOR CONNECTION OF ECT SENSOR CONNECTOR** • Turn engine switch to OFF. • Inspect for poor connection (damaged, pulled-out terminals, corrosion, etc.). • Is there any malfunction?	Yes	Repair or replace suspected terminal, go to Step 7.
		No	Go to next step.

STEP	INSPECTION		ACTION
3	**CLASSIFY ECT SENSOR MALFUNCTION OR HARNESS MALFUNCTION** • Turn engine switch to ON (Engine OFF). • Connect jumper wire between ECT sensor connector terminals. • Access ECT PID using WDS or equivalent. • Is ECT PID **below 1.0 V**?	Yes	Replace ECT sensor, go to Step 7. (See F5–106 ENGINE COOLANT TEMPERATURE (ECT) SENSOR REMOVAL/INSTALLATION)
		No	Go to next step.
4	**INSPECT ECT SENSOR SIGNAL CIRCUIT FOR SHORT TO POWER** • Turn engine switch to ON (Engine OFF). • Inspect voltage between ECT sensor terminal A and body GND. • Is voltage **below 1.0 V**?	Yes	Go to next step.
		No	Repair or replace harness for short to power, go to Step 7.
5	**INSPECT POOR CONNECTION OF PCM CONNECTOR** • Turn engine switch to OFF. • Inspect for poor connection (damaged, pulled-out terminals, corrosion, etc.). • Is there any malfunction?	Yes	Repair or replace suspected terminal, go to Step 7.
		No	Go to next step.
6	**INSPECT ECT SENSOR CIRCUIT FOR OPEN** • Turn engine switch to OFF. • Inspect continuity between following harnesses: — ECT sensor terminal A and PCM terminal 87. — ECT sensor terminal B and PCM terminal 91. • Is there continuity?	Yes	Go to next step.
		No	Repair or replace harness for open, go to next step.
7	**VERIFY TROUBLESHOOTING OF DTC P0118 COMPLETED** • Make sure to reconnect all disconnected connectors. • Clear DTC from PCM memory using WDS or equivalent. • Perform KOEO/KOER self-test. (See F5–116 KOEO/KOER SELF-TEST procedure) • Is same DTC present?	Yes	Replace PCM, go to next step. (See F5–94 PCM REMOVAL/INSTALLATION)
		No	Go to next step.
8	**VERIFY AFTER REPAIR PROCEDURE** • Perform “After Repair Procedure”. (See F5–116 AFTER REPAIR PROCEDURE) • Is there any DTC present?	Yes	Go to applicable DTC inspection. (See F5–117 DTC TABLE)
		No	Troubleshooting completed.

End Of Ste

DTC P0121

AME437001082W19

DTC P0121	Accelerator position sensor No.1 circuit performance problem
DETECTION CONDITION	• PCM monitors input voltage from accelerator position sensor No.1 while engine is running. If input voltage from accelerator position sensor No.1 is **above 1.3 V** when accelerator pedal is depressed, PCM determines accelerator position sensor No.1 circuit performance problem.
POSSIBLE CAUSE	• Accelerator position sensor No.1 malfunction • Connector or terminal malfunction • Voltage drops in GND circuit • Accelerator position sensor misadjustment • PCM malfunction

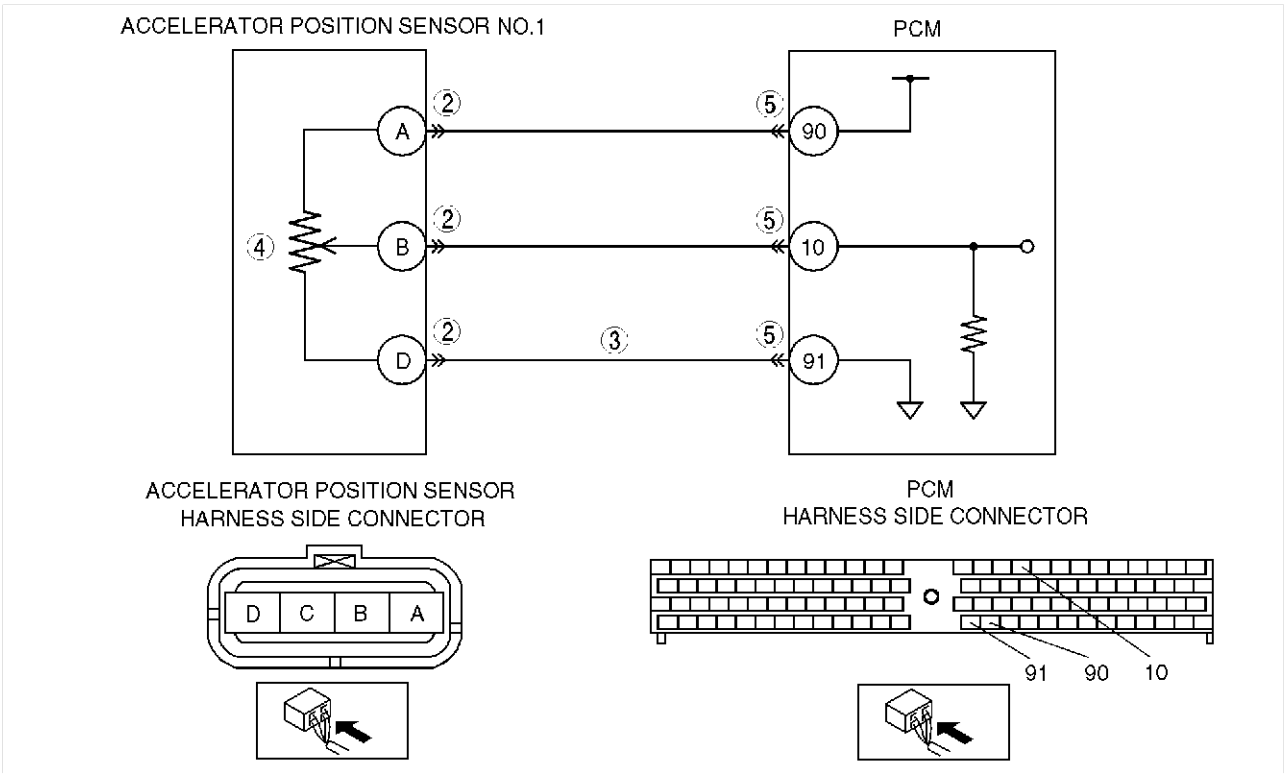

Diagnostic procedure

STEP	INSPECTION		ACTION
1	**VERIFY RELATED REPAIR INFORMATION AVAILABILITY** • Check for related Service Information availability. • Is any related repair information available?	Yes	Perform repair or diagnosis according to available Service Information. • If vehicle is not repaired, go to next step.
		No	Go to next step.

STEP	INSPECTION		ACTION
2	**INSPECT POOR CONNECTION OF ACCELERATOR POSITION SENSOR NO.1 CONNECTOR** • Turn engine switch to OFF. • Inspect for poor connection (damaged, pulled-out terminals, corrosion, etc.). • Is there any malfunction?	Yes	Repair or replace suspected terminal, go to Step 6.
		No	Go to next step.
3	**INSPECT ACCELERATOR POSITION SENSOR NO.1 GND CIRCUIT FOR VOLTAGE DROP** • Turn engine switch to OFF. • Inspect resistance between accelerator position sensor terminal D and body GND. • Is resistance **approx. 0 ohm**?	Yes	Go to next step.
		No	Repair or replace suspected terminal, go to Step 6.
4	**INSPECT ACCELERATOR POSITION SENSOR NO.1** • Inspect accelerator position sensor No.1. (See F5–102 ACCELERATOR POSITION SENSOR INSPECTION) • Is there any malfunction?	Yes	Adjust or replace accelerator position sensor, go to Step 6. (See F5–103 ACCELERATOR POSITION SENSOR ADJUSTMENT) (See F5–74 ACCELERATOR PEDAL COMPONENT DISASSEMBLY/ASSEMBLY)
		No	Go to next step.
5	**INSPECT POOR CONNECTION OF PCM CONNECTOR** • Turn engine switch to OFF. • Inspect for poor connection (damaged, pulled-out terminals, corrosion, etc.). • Is there any malfunction?	Yes	Repair or replace suspected terminal, go to next step.
		No	Go to next step.
6	**VERIFY TROUBLESHOOTING OF DTC P0121 COMPLETED** • Make sure to reconnect all disconnected connectors. • Clear DTC from PCM memory using WDS or equivalent. • Start engine. • Is same DTC present?	Yes	Replace PCM, go to next step. (See F5–94 PCM REMOVAL/INSTALLATION)
		No	Go to next step.
7	**VERIFY AFTER REPAIR PROCEDURE** • Perform “After Repair Procedure”. (See F5–116 AFTER REPAIR PROCEDURE) • Is there any DTC present?	Yes	Go to applicable DTC inspection. (See F5–117 DTC TABLE)
		No	Troubleshooting completed.

End Of Ste

DTC P0122

AME437001082W17

DTC P0122	Accelerator position sensor No.1 circuit low input
DETECTION CONDITION	• PCM monitors input voltage from accelerator position sensor No.1 while engine is running. If input voltage from accelerator position sensor No.1 is **below 0.3 V**, PCM determines accelerator position sensor No.1 circuit low input.
POSSIBLE CAUSE	• Accelerator position sensor No.1 malfunction • Connector or terminal malfunction • Open circuit in wiring between accelerator position sensor terminal A and PCM terminal 90 • Short to GND in wiring between accelerator position sensor terminal B and PCM terminal 10 • Accelerator position sensor No.1 signal and GND circuits short each other • PCM malfunction

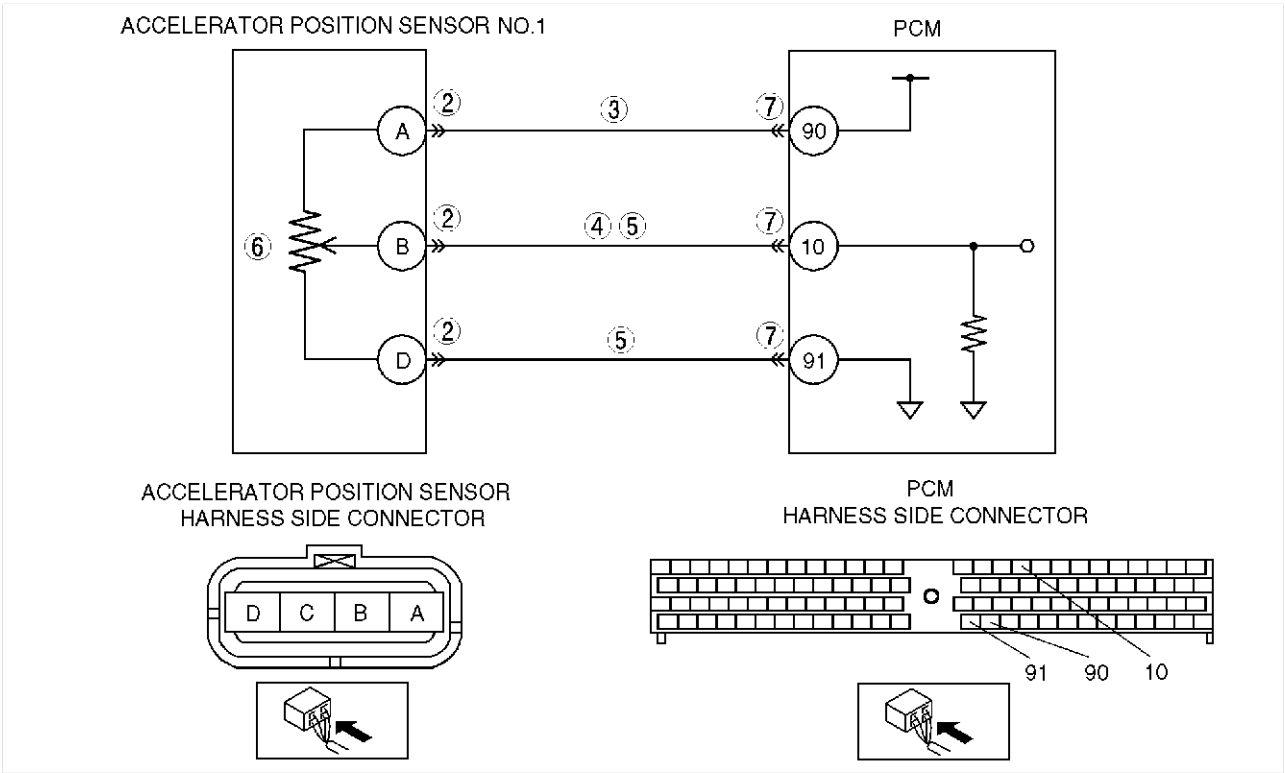

Diagnostic procedure

STEP	INSPECTION		ACTION
1	**PERFORM DTC CONFIRMATION PROCEDURE** • Perform “DTC Confirmation Procedure”. (See F5–115 DTC CONFIRMATION PROCEDURE) • Is same DTC present during KOEO or KOER self-test?	Yes	Go to next step.
		No	Intermittent concern exists. Go to “Intermittent Concern Troubleshooting”. (See F5–195 INTERMITTENT CONCERN TROUBLESHOOTING)
2	**INSPECT POOR CONNECTION OF ACCELERATOR POSITION SENSOR NO.1 CONNECTOR** • Turn engine switch to OFF. • Inspect for poor connection (damaged, pulled-out terminals, corrosion, etc.). • Is there any malfunction?	Yes	Repair or replace suspected terminal, go to Step 8.
		No	Go to next step.

STEP	INSPECTION		ACTION
3	**INSPECT ACCELERATOR POSITION SENSOR NO.1 POWER CIRCUIT FOR OPEN** • Turn engine switch to ON. (Engine OFF) • Inspect voltage at accelerator position sensor terminal A (harness side). • Is voltage **below 1.0 V**?	Yes	Repair or replace harness for open, go to Step 8.
		No	Go to next step.
4	**INSPECT ACCELERATOR POSITION SENSOR NO.1 SIGNAL CIRCUIT FOR SHORT TO GND** • Turn engine switch to OFF. • Inspect continuity between accelerator position sensor terminal B and body GND. • Is there continuity?	Yes	Repair or replace harness for short to GND, go to Step 8.
		No	Go to next step.
5	**INSPECT ACCELERATOR POSITION SENSOR NO.1 CIRCUIT FOR SHORT WITH EACH OTHER** • Turn engine switch to OFF. • Inspect continuity between accelerator position sensor terminals B and D. • Is there continuity?	Yes	Repair or replace harness for short with each other, go to Step 8.
		No	Go to next step.
6	**INSPECT ACCELERATOR POSITION SENSOR NO.1** • Inspect accelerator position sensor No.1. (See F5–102 ACCELERATOR POSITION SENSOR INSPECTION) • Is there any malfunction?	Yes	Replace accelerator position sensor, go to Step 8. (See F5–74 ACCELERATOR PEDAL COMPONENT DISASSEMBLY/ASSEMBLY)
		No	Go to next step.
7	**INSPECT POOR CONNECTION OF PCM CONNECTOR** • Turn engine switch to OFF. • Inspect for poor connection (damaged, pulled-out terminals, corrosion, etc.). • Is there any malfunction?	Yes	Repair or replace suspected terminal, go to next step.
		No	Go to next step.
8	**VERIFY TROUBLESHOOTING OF DTC P0122 COMPLETED** • Make sure to reconnect all disconnected connectors. • Clear DTC from PCM memory using WDS or equivalent. • Perform KOEO/KOER self-test. (See F5–116 KOEO/KOER SELF-TEST procedure) • Is same DTC present?	Yes	Replace PCM, go to next step. (See F5–94 PCM REMOVAL/INSTALLATION)
		No	Go to next step.
9	**VERIFY AFTER REPAIR PROCEDURE** • Perform “After Repair Procedure”. (See F5–116 AFTER REPAIR PROCEDURE) • Is there any DTC present?	Yes	Go to applicable DTC inspection. (See F5–117 DTC TABLE)
		No	Troubleshooting completed.

End Of Sie

DTC P0123

AME437001082W18

DTC P0123	Accelerator position sensor No.1 circuit high input
DETECTION CONDITION	• PCM monitors input voltage from accelerator position sensor No.1 while engine is running. If input voltage from accelerator position sensor No.1 is **above 4.7 V**, PCM determines accelerator position sensor No.1 circuit high input.
POSSIBLE CAUSE	• Accelerator position sensor No.1 malfunction • Connector or terminal malfunction • Accelerator position sensor No.1 power and signal circuits short each other • Open circuit in wiring between accelerator position sensor terminal B and PCM terminal 10 • Open circuit in wiring between accelerator position sensor terminal D and PCM terminal 91 • PCM malfunction

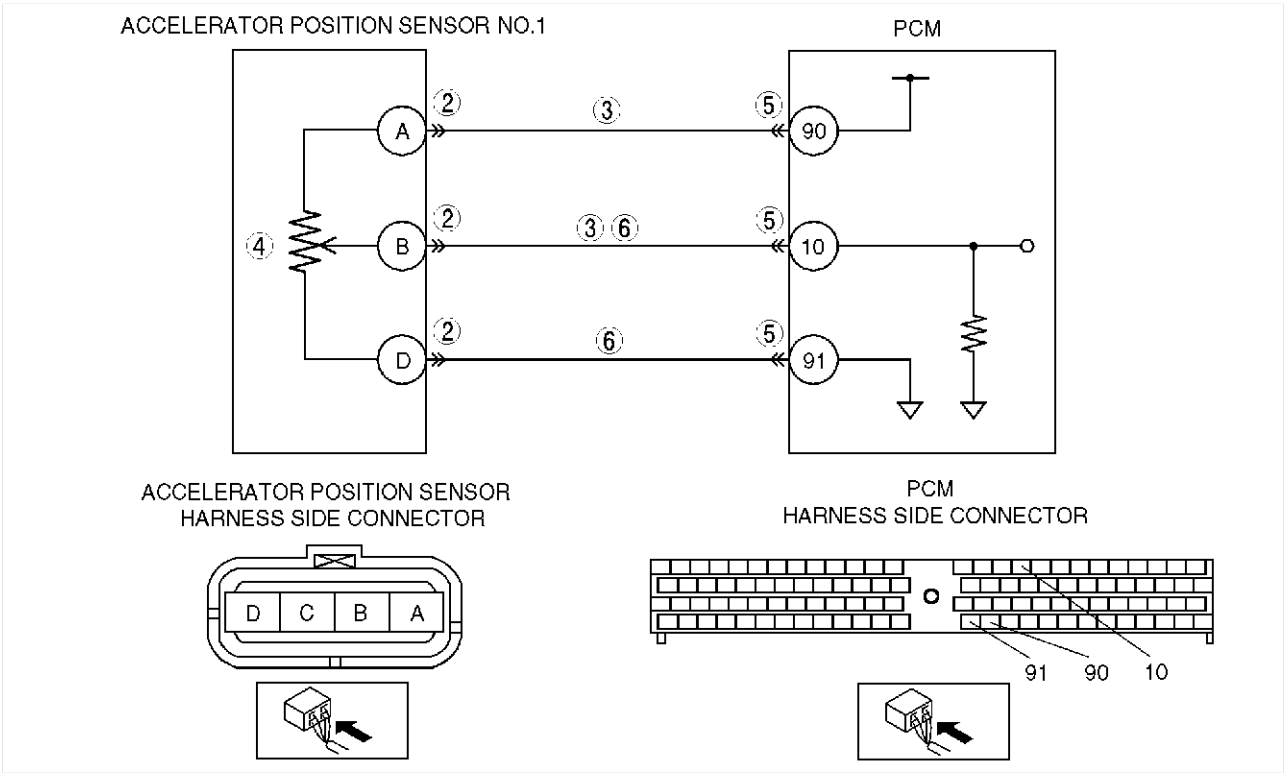

Diagnostic procedure

STEP	INSPECTION		ACTION
1	**PERFORM DTC CONFIRMATION PROCEDURE** • Perform “DTC Confirmation Procedure”. (See F5–115 DTC CONFIRMATION PROCEDURE) • Is same DTC present during KOEO or KOER self-test?	Yes	Go to next step.
		No	Intermittent concern exists. Go to “Intermittent Concern Troubleshooting”. (See F5–195 INTERMITTENT CONCERN TROUBLESHOOTING)
2	**INSPECT POOR CONNECTION OF ACCELERATOR POSITION SENSOR NO.1 CONNECTOR** • Turn engine switch to OFF. • Inspect for poor connection (damaged, pulled-out terminals, corrosion, etc.). • Is there any malfunction?	Yes	Repair or replace suspected terminal, go to Step 7.
		No	Go to next step.

STEP	INSPECTION		ACTION
3	**INSPECT ACCELERATOR POSITION SENSOR NO.1 CIRCUIT FOR SHORT EACH OTHER** • Turn engine switch to OFF. • Inspect continuity between accelerator position sensor terminals A and B • Is there continuity?	Yes	Repair or replace harness for short each other, go to Step 7.
		No	Go to next step.
4	**INSPECT ACCELERATOR POSITION SENSOR NO.1** • Inspect accelerator position sensor No.1. (See F5–102 ACCELERATOR POSITION SENSOR INSPECTION) • Is there any malfunction?	Yes	Replace accelerator position sensor, go to Step 7. (See F5–74 ACCELERATOR PEDAL COMPONENT DISASSEMBLY/ASSEMBLY)
		No	Go to next step.
5	**INSPECT POOR CONNECTION OF PCM CONNECTOR** • Turn engine switch to OFF. • Inspect for poor connection (damaged, pulled-out terminals, corrosion, etc.). • Is there any malfunction?	Yes	Repair or replace suspected terminal, go to Step 7.
		No	Go to next step.
6	**INSPECT ACCELERATOR POSITION SENSOR NO.1 CIRCUIT FOR OPEN** • Turn engine switch to OFF. • Inspect continuity between following harnesses: — Accelerator position sensor terminal B and PCM terminal 10. — Accelerator position sensor terminal D and PCM terminal 91. • Is there continuity?	Yes	Go to next step.
		No	Repair or replace harness for open, go to next step.
7	**VERIFY TROUBLESHOOTING OF DTC P0123 COMPLETED** • Make sure to reconnect all disconnected connectors. • Clear DTC from PCM memory using WDS or equivalent. • Perform KOEO/KOER self-test. (See F5–116 KOEO/KOER SELF-TEST procedure) • Is same DTC present?	Yes	Replace PCM, go to next step. (See F5–94 PCM REMOVAL/INSTALLATION)
		No	Go to next step.
8	**VERIFY AFTER REPAIR PROCEDURE** • Perform “After Repair Procedure”. (See F5–116 AFTER REPAIR PROCEDURE) • Is there any DTC present?	Yes	Go to applicable DTC inspection. (See F5–117 DTC TABLE)
		No	Troubleshooting completed.

End Of Ste

DTC P0182

AME437001082W20

DTC P0182	Fuel temperature sensor circuit low input
DETECTION CONDITION	• PCM monitors input voltage from fuel temperature sensor while engine is running. If input voltage from fuel temperature sensor is **below 0.1 V**, PCM determines fuel temperature sensor circuit low input.
POSSIBLE CAUSE	• Fuel temperature sensor malfunction • Connector or terminal malfunction • Short to GND in wiring between fuel temperature sensor terminal A and PCM terminal 35 • Fuel temperature sensor signal and GND circuits short each other • PCM malfunction

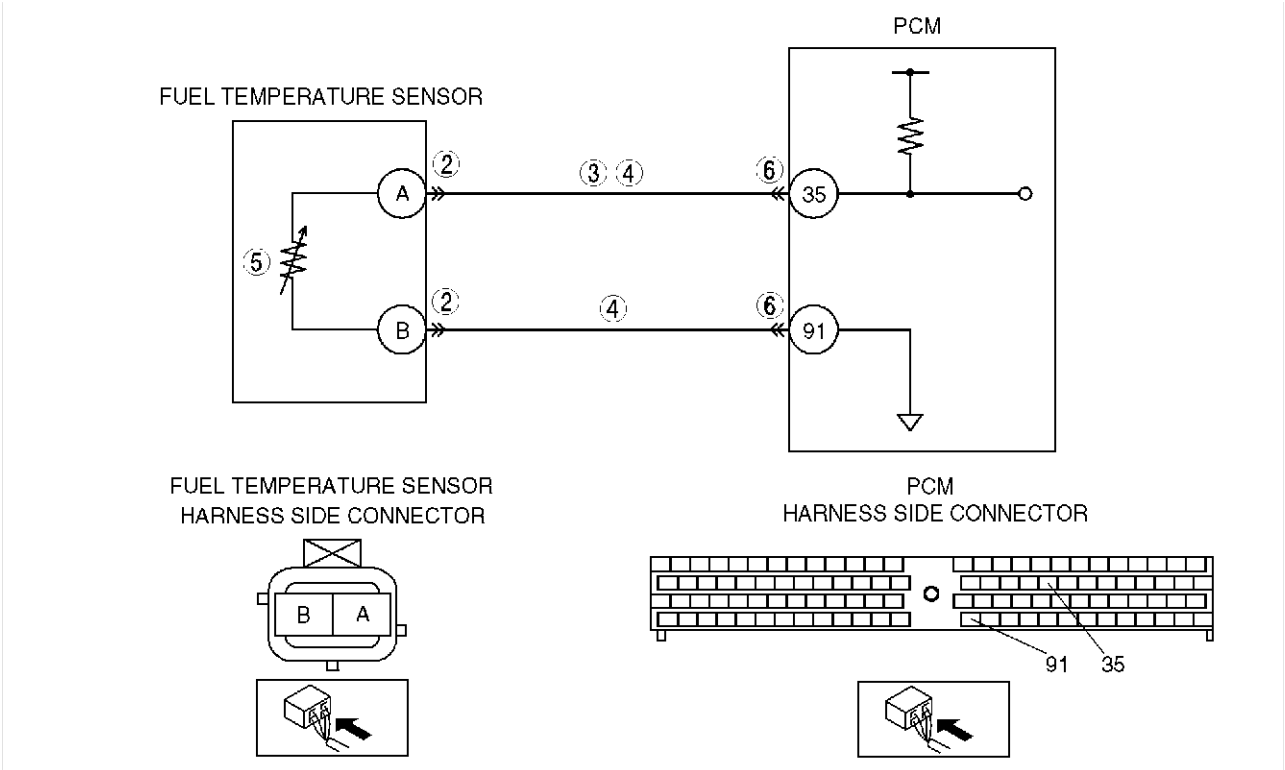

Diagnostic procedure

STEP	INSPECTION		ACTION
1	**VERIFY RELATED REPAIR INFORMATION AVAILABILITY** • Check for related Service Information availability. • Is any related repair information available?	Yes	Perform repair or diagnosis according to available Service Information. • If vehicle is not repaired, go to next step.
		No	Go to next step.

STEP	INSPECTION		ACTION
2	**INSPECT POOR CONNECTION OF FUEL TEMPERATURE SENSOR CONNECTOR** • Turn engine switch to OFF. • Inspect for poor connection (damaged, pulled-out terminals, corrosion, etc.). • Is there any malfunction?	Yes	Repair or replace suspected terminal, go to Step 7.
		No	Go to next step.
3	**INSPECT FUEL TEMPERATURE SENSOR SIGNAL CIRCUIT FOR SHORT TO GND** • Turn engine switch to OFF. • Inspect continuity between fuel temperature sensor terminal A and body GND. • Is there continuity?	Yes	Repair or replace harness for short to GND, go to Step 7.
		No	Go to next step.
4	**INSPECT FUEL TEMPERATURE SENSOR CIRCUIT FOR SHORT WITH EACH OTHER** • Turn engine switch to OFF. • Inspect continuity between fuel temperature sensor terminals A and B. • Is there continuity?	Yes	Repair or replace harness for short with each other, go to Step 7.
		No	Go to next step.
5	**INSPECT FUEL TEMPERATURE SENSOR** • Inspect fuel temperature sensor. (See F5–107 FUEL TEMPERATURE SENSOR INSPECTION) • Is there any malfunction?	Yes	Repair supply pump, go to Step 7. (See F5–82 SUPPLY PUMP INSPECTION)
		No	Go to next step.
6	**INSPECT POOR CONNECTION OF PCM CONNECTOR** • Turn engine switch to OFF. • Inspect for poor connection (damaged, pulled-out terminals, corrosion, etc.). • Is there any malfunction?	Yes	Repair or replace suspected terminal, go to next step.
		No	Go to next step.
7	**VERIFY TROUBLESHOOTING OF DTC P0182 COMPLETED** • Make sure to reconnect all disconnected connectors. • Clear DTC from PCM memory using WDS or equivalent. • Start engine. • Is same DTC present?	Yes	Replace PCM, go to next step. (See F5–94 PCM REMOVAL/INSTALLATION)
		No	Go to next step.
8	**VERIFY AFTER REPAIR PROCEDURE** • Perform “After Repair Procedure”. (See F5–116 AFTER REPAIR PROCEDURE) • Is there any DTC present?	Yes	Go to applicable DTC inspection. (See F5–117 DTC TABLE)
		No	Troubleshooting completed.

End Of Sie

DTC P0183

AME437001082W21

DTC P0183	Fuel temperature sensor circuit high input
DETECTION CONDITION	• PCM monitors input voltage from fuel temperature sensor while engine is running. If input voltage from fuel temperature sensor is **above 5.0 V**, PCM determines fuel temperature sensor circuit high input.
POSSIBLE CAUSE	• Fuel temperature sensor malfunction • Connector or terminal malfunction • Short to power circuit in wiring between fuel temperature sensor terminal A and PCM terminal 35 • Open circuit in wiring between fuel temperature sensor terminal A and PCM terminal 35 • Open circuit in wiring between fuel temperature sensor terminal B and PCM terminal 91 • PCM malfunction

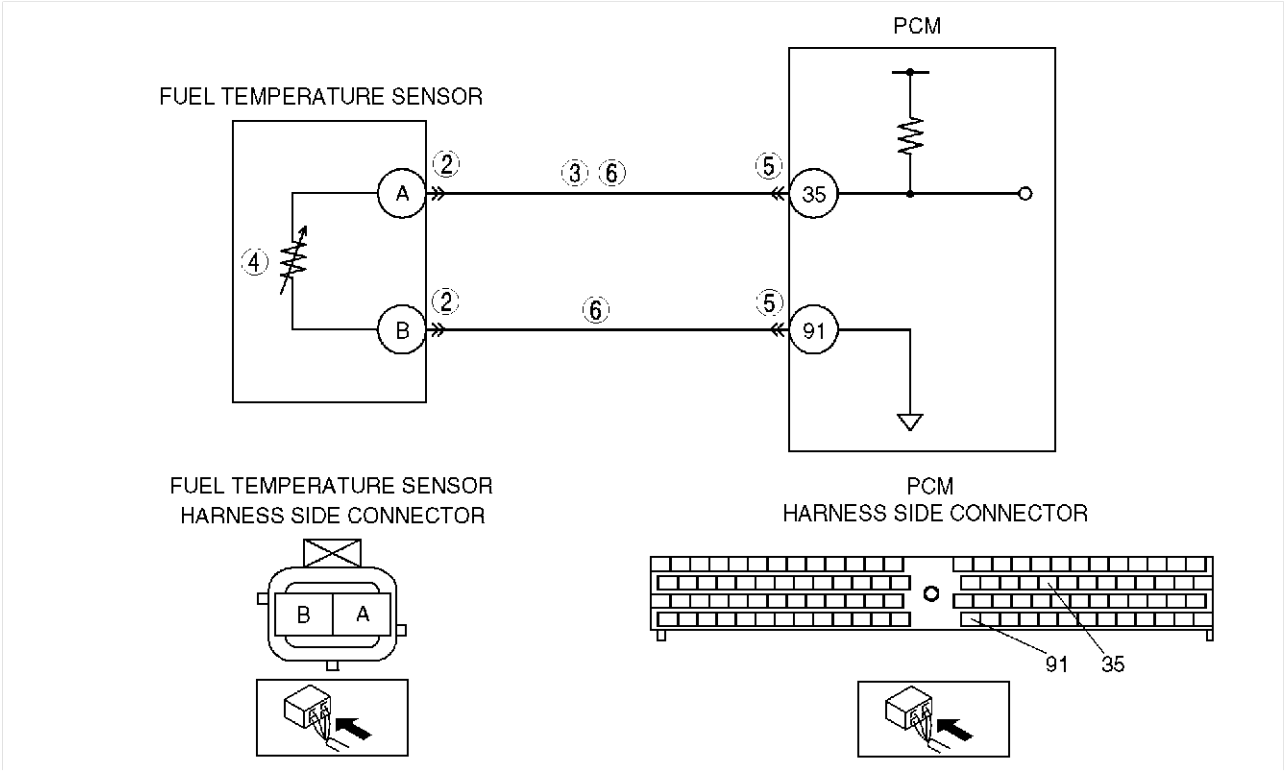

Diagnostic procedure

STEP	INSPECTION		ACTION
1	**VERIFY RELATED REPAIR INFORMATION AVAILABILITY** • Check for related Service Information availability. • Is any related repair information available?	Yes	Perform repair or diagnosis according to available Service Information. • If vehicle is not repaired, go to next step.
		No	Go to next step.
2	**INSPECT POOR CONNECTION OF FUEL TEMPERATURE SENSOR CONNECTOR** • Turn engine switch to OFF. • Inspect for poor connection (damaged, pulled-out terminals, corrosion, etc.). • Is there any malfunction?	Yes	Repair or replace suspected terminal, go to Step 7.
		No	Go to next step.
3	**INSPECT FUEL TEMPERATURE SENSOR SIGNAL CIRCUIT FOR SHORT TO POWER** • Turn engine switch to ON (Engine OFF). • Inspect voltage between fuel temperature sensor terminal A and body GND. • Is voltage below 1.0 V?	Yes	Go to next step.
		No	Repair or replace harness for short to power, go to Step 7.
4	**INSPECT FUEL TEMPERATURE SENSOR** • Inspect fuel temperature sensor. (See F5–107 FUEL TEMPERATURE SENSOR INSPECTION) • Is there any malfunction?	Yes	Repair supply pump, go to Step 7. (See F5–82 SUPPLY PUMP INSPECTION)
		No	Go to next step.

STEP	INSPECTION		ACTION
5	**INSPECT POOR CONNECTION OF PCM CONNECTOR** • Turn engine switch to OFF. • Inspect for poor connection (damaged, pulled-out terminals, corrosion, etc.). • Is there any malfunction?	Yes	Repair or replace suspected terminal, go to Step 7.
		No	Go to next step.
6	**INSPECT FUEL TEMPERATURE SENSOR CIRCUIT FOR OPEN** • Turn engine switch to OFF. • Inspect continuity between following harnesses: — Fuel temperature sensor terminal A and PCM terminal 35. — Fuel temperature sensor terminal B and PCM terminal 91. • Is there continuity?	Yes	Go to next step.
		No	Repair or replace harness for open, go to next step.
7	**VERIFY TROUBLESHOOTING OF DTC P0183 COMPLETED** • Make sure to reconnect all disconnected connectors. • Clear DTC from PCM memory using WDS or equivalent. • Start engine. • Is same DTC present?	Yes	Replace PCM, go to next step. (See F5–94 PCM REMOVAL/INSTALLATION)
		No	Go to next step.
8	**VERIFY AFTER REPAIR PROCEDURE** • Perform “After Repair Procedure”. (See F5–116 AFTER REPAIR PROCEDURE) • Is there any DTC present?	Yes	Go to applicable DTC inspection. (See F5–117 DTC TABLE)
		No	Troubleshooting completed.

End Of Ste

DTC P0191

AME437001082W22

DTC P0191	Fuel pressure sensor circuit performance problem
DETECTION CONDITION	• PCM monitors fuel pressure in common rail from fuel pressure sensor while engine is running. PCM calculates difference between actual fuel pressure and target fuel pressure. If pressure difference exceeds preprogrammed criteria, PCM determines fuel pressure sensor circuit performance problem.
POSSIBLE CAUSE	• Fuel pressure sensor malfunction • Suction control valve malfunction • Clogged fuel line • PCM malfunction

Diagnostic procedure

STEP	INSPECTION		ACTION
1	**VERIFY RELATED REPAIR INFORMATION AVAILABILITY** • Check for related Service Information availability. • Is any related repair information available?	Yes	Perform repair or diagnosis according to available Service Information. • If vehicle is not repaired, go to next step.
		No	Go to next step.
2	**FOLLOW OTHER DETECTED DTC FIRST** • Turn engine switch to OFF. • Start engine. • Have P0091, P0092, P0192, P0193 been detected?	Yes	Go to applicable DTC inspection. (See F5–117 DTC TABLE)
		No	Go to next step.
3	**INSPECT FUEL PRESSURE SENSOR** • Inspect fuel pressure sensor. (See F5–109 FUEL PRESSURE SENSOR INSPECTION) • Is there any malfunction?	Yes	Replace common rail, go to Step 6. (See F5–82 SUPPLY PUMP REMOVAL/INSTALLATION)
		No	Go to next step.
4	**INSPECT SUCTION CONTROL VALVE** • Inspect suction control valve. (See F5–83 SUCTION CONTROL VALVE INSPECTION) • Is there any malfunction?	Yes	Repair supply pump, go to Step 6. (See F5–82 SUPPLY PUMP INSPECTION)
		No	Go to next step.

F5

STEP	INSPECTION		ACTION
5	**INSPECT FUEL LINE** • Turn engine switch to OFF. • Inspect for clogs in following fuel lines for each cylinder: — Common rail and fuel injector. — Common rail and fuel tank. • Is there any malfunction?	Yes	Repair or replace suspected fuel line, go to next step.
		No	Go to next step.
6	**VERIFY TROUBLESHOOTING OF DTC P0016 COMPLETED** • Make sure to reconnect all disconnected connectors. • Clear DTC from PCM memory using WDS or equivalent. • Start engine. • Is same DTC present?	Yes	Replace PCM, go to next step. (See F5–94 PCM REMOVAL/INSTALLATION)
		No	Go to next step.
7	**VERIFY AFTER REPAIR PROCEDURE** • Perform “After Repair Procedure”. (See F5–116 AFTER REPAIR PROCEDURE) • Is there any DTC present?	Yes	Go to applicable DTC inspection. (See F5–117 DTC TABLE)
		No	Troubleshooting completed.

End Of Sie

DTC P0192

AME437001082W23

DTC P0192	Fuel pressure sensor circuit low input
DETECTION CONDITION	• PCM monitors input voltage from fuel pressure sensor while engine is running. If input voltage from fuel pressure sensor is **below 0.4 V**, PCM determines fuel pressure sensor circuit low input.
POSSIBLE CAUSE	• Fuel pressure sensor malfunction • Connector or terminal malfunction • Short to GND in wiring between fuel pressure sensor terminal C and PCM terminal 90 • Open circuit in wiring between fuel pressure sensor terminal C and PCM terminal 90 • Short to GND in wiring between fuel pressure sensor terminal B and PCM terminal 61 • Fuel pressure sensor signal and GND circuits short each other • PCM malfunction

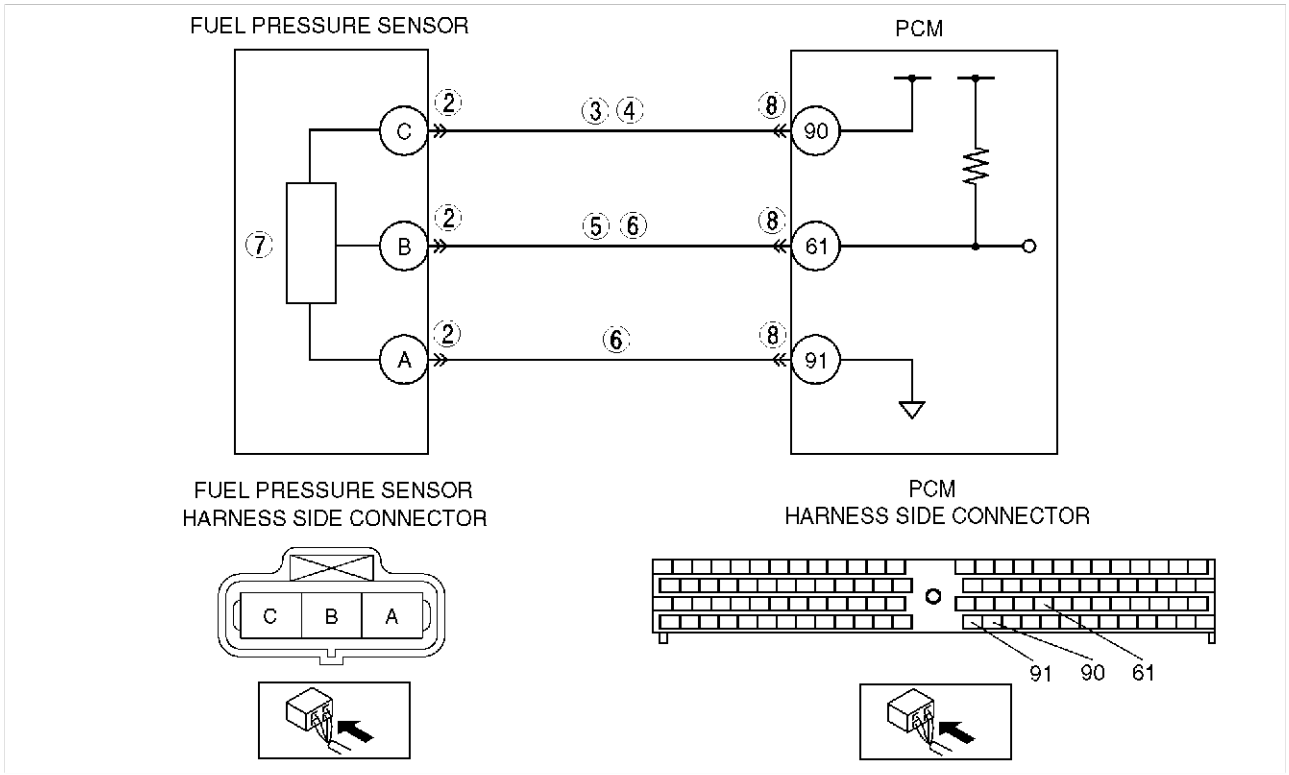

Diagnostic procedure

STEP	INSPECTION		ACTION
1	**VERIFY RELATED REPAIR INFORMATION AVAILABILITY** • Check for related Service Information availability. • Is any related repair information available?	Yes	Perform repair or diagnosis according to available Service Information. • If vehicle is not repaired, go to next step.
		No	Go to next step.
2	**INSPECT POOR CONNECTION OF FUEL PRESSURE SENSOR CONNECTOR** • Turn engine switch to OFF. • Inspect for poor connection (damaged, pulled-out terminals, corrosion, etc.). • Is there any malfunction?	Yes	Repair or replace suspected terminal, go to Step 9.
		No	Go to next step.
3	**INSPECT FUEL PRESSURE SENSOR SIGNAL CIRCUIT FOR SHORT TO GND** • Turn engine switch to OFF. • Inspect continuity between fuel pressure sensor terminal C and body GND. • Is there continuity?	Yes	Repair or replace harness for short to GND, go to Step 9.
		No	Go to next step.
4	**INSPECT FUEL PRESSURE SENSOR POWER CIRCUIT FOR OPEN** • Turn engine switch to ON. (Engine OFF) • Inspect voltage at fuel pressure sensor terminal C (harness side). • Is voltage **below 1.0 V**?	Yes	Repair or replace harness for open, go to Step 9.
		No	Go to next step.
5	**INSPECT FUEL PRESSURE SENSOR SIGNAL CIRCUIT FOR SHORT TO GND** • Turn engine switch to OFF. • Inspect continuity between fuel pressure sensor terminal B and body GND. • Is there continuity?	Yes	Repair or replace harness for short to GND, go to Step 9.
		No	Go to next step.
6	**INSPECT FUEL PRESSURE SENSOR CIRCUIT FOR SHORT WITH EACH OTHER** • Turn engine switch to OFF. • Inspect continuity between fuel pressure sensor terminals B and A. • Is there continuity?	Yes	Repair or replace harness for short with each other, go to Step 9.
		No	Go to next step.
7	**INSPECT FUEL TEMPERATURE SENSOR** • Inspect fuel temperature sensor. (See F5–109 FUEL PRESSURE SENSOR INSPECTION) • Is there any malfunction?	Yes	Repair supply pump, go to Step 9. (See F5–82 SUPPLY PUMP INSPECTION)
		No	Go to next step.
8	**INSPECT POOR CONNECTION OF PCM CONNECTOR** • Turn engine switch to OFF. • Inspect for poor connection (damaged, pulled-out terminals, corrosion, etc.). • Is there any malfunction?	Yes	Repair or replace suspected terminal, go to next step.
		No	Go to next step.
9	**VERIFY TROUBLESHOOTING OF DTC P0192 COMPLETED** • Make sure to reconnect all disconnected connectors. • Clear DTC from PCM memory using WDS or equivalent. • Start engine. • Is same DTC present?	Yes	Replace PCM, go to next step. (See F5–94 PCM REMOVAL/INSTALLATION)
		No	Go to next step.
10	**VERIFY AFTER REPAIR PROCEDURE** • Perform “After Repair Procedure”. (See F5–116 AFTER REPAIR PROCEDURE) • Is there any DTC present?	Yes	Go to applicable DTC inspection. (See F5–117 DTC TABLE)
		No	Troubleshooting completed.

End Of Ste

DTC P0193

AME437001082W29

DTC P0193	Fuel pressure sensor circuit high input
DETECTION CONDITION	• PCM monitors input voltage from fuel pressure sensor while engine is running. If input voltage from fuel pressure sensor is **above 4.8 V**, PCM determines fuel pressure sensor circuit high input.
POSSIBLE CAUSE	• Fuel pressure sensor malfunction • Connector or terminal malfunction • Fuel pressure sensor power and signal circuits short each other • Open circuit in wiring between fuel pressure sensor terminal B and PCM terminal 61 • Open circuit in wiring between fuel pressure sensor terminal A and PCM terminal 91 • PCM malfunction

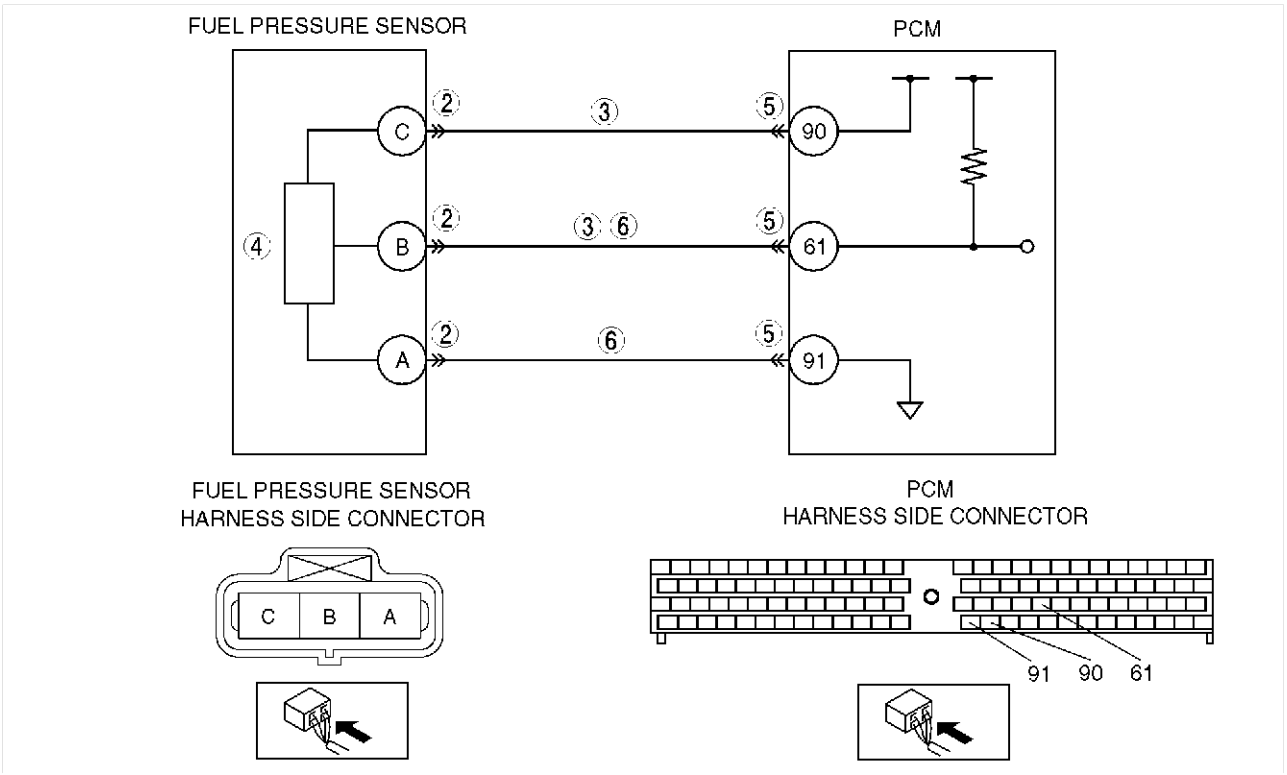

Diagnostic procedure

STEP	INSPECTION		ACTION
1	**VERIFY RELATED REPAIR INFORMATION AVAILABILITY** • Check for related Service Information availability. • Is any related repair information available?	Yes	Perform repair or diagnosis according to available Service Information. • If vehicle is not repaired, go to next step.
		No	Go to next step.

STEP	INSPECTION		ACTION
2	**INSPECT POOR CONNECTION OF FUEL PRESSURE SENSOR CONNECTOR** • Turn engine switch to OFF. • Inspect for poor connection (damaged, pulled-out terminals, corrosion, etc.). • Is there any malfunction?	Yes	Repair or replace suspected terminal, go to Step 7.
		No	Go to next step.
3	**INSPECT FUEL PRESSURE SENSOR CIRCUIT FOR SHORT WITH EACH OTHER** • Turn engine switch to OFF. • Inspect continuity between fuel pressure sensor terminals C and B • Is there continuity?	Yes	Repair or replace harness for short with each other, go to Step 7.
		No	Go to next step.
4	**INSPECT FUEL TEMPERATURE SENSOR** • Inspect fuel temperature sensor. (See F5–107 FUEL TEMPERATURE SENSOR INSPECTION) • Is there any malfunction?	Yes	Repair supply pump, go to Step 7. (See F5–82 SUPPLY PUMP INSPECTION)
		No	Go to next step.
5	**INSPECT POOR CONNECTION OF PCM CONNECTOR** • Turn engine switch to OFF. • Inspect for poor connection (damaged, pulled-out terminals, corrosion, etc.). • Is there any malfunction?	Yes	Repair or replace suspected terminal, go to Step 7.
		No	Go to next step.
6	**INSPECT FUEL PRESSURE SENSOR CIRCUIT FOR OPEN** • Turn engine switch to OFF. • Inspect continuity between following harnesses: — Fuel pressure sensor terminal B and PCM terminal 61. — Fuel pressure sensor terminal A and PCM terminal 91. • Is there continuity?	Yes	Go to next step.
		No	Repair or replace harness for open, go to next step.
7	**VERIFY TROUBLESHOOTING OF DTC P0193 COMPLETED** • Make sure to reconnect all disconnected connectors. • Clear DTC from PCM memory using WDS or equivalent. • Start engine. • Is same DTC present?	Yes	Replace PCM, go to next step. (See F5–94 PCM REMOVAL/INSTALLATION)
		No	Go to next step.
8	**VERIFY AFTER REPAIR PROCEDURE** • Perform “After Repair Procedure”. (See F5–116 AFTER REPAIR PROCEDURE) • Is there any DTC present?	Yes	Go to applicable DTC inspection. (See F5–117 DTC TABLE)
		No	Troubleshooting completed.

End Of Ste

DTC P0200

AME437001082W24

DTC P0200	Fuel injector circuit malfunction
DETECTION CONDITION	• PCM monitors injection confirmation signal from IDM while engine is running. If injection confirmation signal is not input normally, PCM determines fuel injector circuit malfunction.
POSSIBLE CAUSE	• IDM • Connector or terminal malfunction • Short to GND in wiring between IDM terminal 2B and PCM terminal 30 • Short to GND in wiring between IDM terminal 2C and PCM terminal 42 • Short to GND in wiring between IDM terminal 2D and PCM terminal 44 • Short to GND in wiring between IDM terminal 2E and PCM terminal 45 • Short to GND in wiring between IDM terminal 2F and PCM terminal 43 • Short to power circuit in wiring between IDM terminal 2B and PCM terminal 30 • Short to power circuit in wiring between IDM terminal 2C and PCM terminal 42 • Short to power circuit in wiring between IDM terminal 2D and PCM terminal 44 • Short to power circuit in wiring between IDM terminal 2E and PCM terminal 45 • Short to power circuit in wiring between IDM terminal 2F and PCM terminal 43 • Open circuit in wiring between IDM terminal 2B and PCM terminal 30 • Open circuit in wiring between IDM terminal 2C and PCM terminal 42 • Open circuit in wiring between IDM terminal 2D and PCM terminal 44 • Open circuit in wiring between IDM terminal 2E and PCM terminal 45 • Open circuit in wiring between IDM terminal 2F and PCM terminal 43 • PCM malfunction

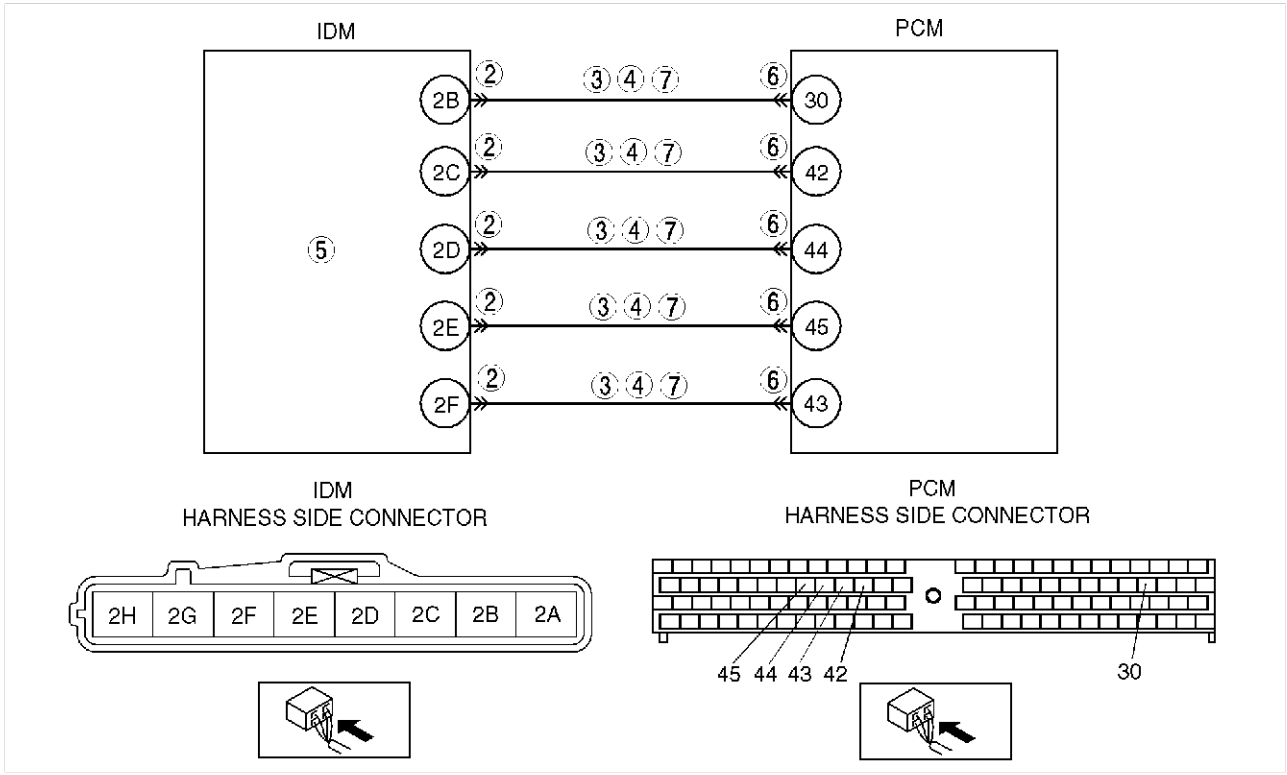

Diagnostic procedure

STEP	INSPECTION		ACTION
1	**VERIFY RELATED REPAIR INFORMATION AVAILABILITY** • Check for related Service Information availability. • Is any related repair information available?	Yes	Perform repair or diagnosis according to available Service Information. • If vehicle is not repaired, go to next step.
		No	Go to next step.
2	**FOLLOW OTHER DETECTED DTC FIRST** • Turn engine switch to OFF. • Start engine. • Has P0300 been detected?	Yes	Go to DTC P0300 inspection. (See F5–165 DTC P0300)
		No	Go to next step.

STEP	INSPECTION		ACTION
3	**INSPECT POOR CONNECTION OF IDM CONNECTOR** • Turn engine switch to OFF. • Inspect for poor connection (damaged, pulled-out terminals, corrosion, etc.). • Is there any malfunction?	Yes	Repair or replace suspected terminal, go to Step 9.
		No	Go to next step.
4	**INSPECT IDM CIRCUIT FOR SHORT TO GND** • Turn engine switch to OFF. • Inspect continuity between following harnesses: — IDM terminal 2B and body GND. — IDM terminal 2C and body GND. — IDM terminal 2D and body GND. — IDM terminal 2E and body GND. — IDM terminal 2F and body GND. • Is there continuity?	Yes	Repair or replace harness for short to GND, go to Step 9.
		No	Go to next step.
5	**INSPECT IDM CIRCUIT FOR SHORT TO POWER** • Turn engine switch to ON (Engine OFF). • Inspect voltage between following harnesses: — IDM terminal 2B and body GND. — IDM terminal 2C and body GND. — IDM terminal 2D and body GND. — IDM terminal 2E and body GND. — IDM terminal 2F and body GND. • Is voltage **below 1.0 V**?	Yes	Go to next step.
		No	Repair or replace harness for short to power, go to Step 9.
6	**INSPECT IDM** • Inspect IDM. (See F5–114 INJECTOR DRIVER MODULE (IDM) INSPECTION) • Is there any malfunction?	Yes	Replace IDM, go to Step 9.
		No	Go to next step.
7	**INSPECT POOR CONNECTION OF PCM CONNECTOR** • Turn engine switch to OFF. • Inspect for poor connection (damaged, pulled-out terminals, corrosion, etc.). • Is there any malfunction?	Yes	Repair or replace suspected terminal, go to Step 9.
		No	Go to next step.
8	**INSPECT IDM CIRCUIT FOR OPEN** • Turn engine switch to OFF. • Inspect continuity between following harnesses: — IDM terminal 2B and PCM terminal 30. — IDM terminal 2C and PCM terminal 42. — IDM terminal 2D and PCM terminal 44. — IDM terminal 2E and PCM terminal 45. — IDM terminal 2F and PCM terminal 43. • Is there continuity?	Yes	Go to next step.
		No	Repair or replace harness for open, go to next step.
9	**VERIFY TROUBLESHOOTING OF DTC P0200 COMPLETED** • Make sure to reconnect all disconnected connectors. • Clear DTC from PCM memory using WDS or equivalent. • Start engine. • Is same DTC present?	Yes	Replace PCM, go to next step. (See F5–94 PCM REMOVAL/INSTALLATION)
		No	Go to next step.
10	**VERIFY AFTER REPAIR PROCEDURE** • Perform “After Repair Procedure”. (See F5–116 AFTER REPAIR PROCEDURE) • Is there any DTC present?	Yes	Go to applicable DTC inspection. (See F5–117 DTC TABLE)
		No	Troubleshooting completed.

End Of Sta

DTC P0221

AME437001082W25

DTC P0221	Accelerator position sensor No.2 circuit performance problem
DETECTION CONDITION	• PCM monitors input voltage from accelerator position sensor No.1 and accelerator position sensor No.2 while engine is running. If voltage difference exceeds **0.9 V**, PCM determines accelerator position sensor No.2 circuit performance problem.
POSSIBLE CAUSE	• Accelerator position sensor malfunction • Connector or terminal malfunction • Accelerator position sensor misadjustment • PCM malfunction

Diagnostic procedure

STEP	INSPECTION		ACTION
1	**VERIFY RELATED REPAIR INFORMATION AVAILABILITY** • Check for related Service Information availability. • Is any related repair information available?	Yes	Perform repair or diagnosis according to available Service Information. • If vehicle is not repaired, go to next step.
		No	Go to next step.
2	**INSPECT POOR CONNECTION OF ACCELERATOR POSITION SENSOR CONNECTOR** • Turn engine switch to OFF. • Inspect for poor connection (damaged, pulled-out terminals, corrosion, etc.). • Is there any malfunction?	Yes	Repair or replace suspected terminal, go to Step 5.
		No	Go to next step.
3	**INSPECT ACCELERATOR POSITION SENSOR** • Turn engine switch to OFF. • Inspect accelerator position sensor. (See F5–102 ACCELERATOR POSITION SENSOR INSPECTION) • Is there any malfunction?	Yes	Adjust or replace accelerator position sensor, go to Step 5. (See F5–103 ACCELERATOR POSITION SENSOR ADJUSTMENT) (See F5–74 ACCELERATOR PEDAL COMPONENT DISASSEMBLY/ASSEMBLY)
		No	Go to next step.
4	**INSPECT POOR CONNECTION OF PCM CONNECTOR** • Turn engine switch to OFF. • Inspect for poor connection (damaged, pulled-out terminals, corrosion, etc.). • Is there any malfunction?	Yes	Repair or replace suspected terminal, go to next step.
		No	Go to next step.
5	**VERIFY TROUBLESHOOTING OF DTC P0221 COMPLETED** • Make sure to reconnect all disconnected connectors. • Clear DTC from PCM memory using WDS or equivalent. • Start engine. • Is same DTC present?	Yes	Replace PCM, go to next step. (See F5–94 PCM REMOVAL/INSTALLATION)
		No	Go to next step.
6	**VERIFY AFTER REPAIR PROCEDURE** • Perform “After Repair Procedure”. (See F5–116 AFTER REPAIR PROCEDURE) • Is there any DTC present?	Yes	Go to applicable DTC inspection. (See F5–117 DTC TABLE)
		No	Troubleshooting completed.

End Of Sie

DTC P0222

AME437001082W27

DTC P0222	Accelerator position sensor No.2 circuit low input
DETECTION CONDITION	• PCM monitors input voltage from accelerator position sensor No.2 while engine is running. If input voltage from accelerator position sensor No.2 is **below 0.3 V**, PCM determines accelerator position sensor No.2 circuit low input.
POSSIBLE CAUSE	• Accelerator position sensor No.2 malfunction • Connector or terminal malfunction • Open circuit in wiring between accelerator position sensor terminal A and PCM terminal 90 • Short to GND in wiring between accelerator position sensor terminal C and PCM terminal 88 • Accelerator position sensor No.2 signal and GND circuits short each other • PCM malfunction

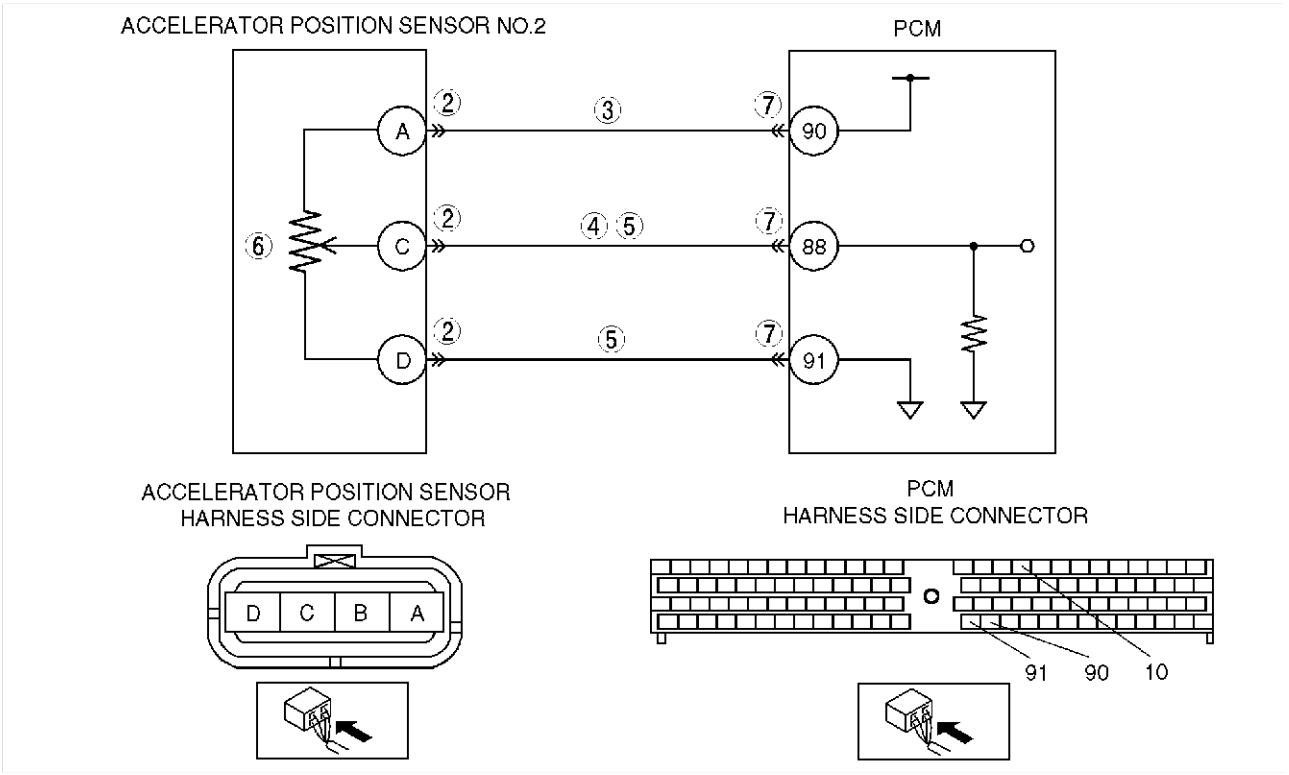

Diagnostic procedure

STEP	INSPECTION		ACTION
1	**PERFORM DTC CONFIRMATION PROCEDURE** • Perform “DTC Confirmation Procedure”. (See F5–115 DTC CONFIRMATION PROCEDURE) • Is same DTC present during KOEO or KOER self-test?	Yes	Go to next step.
		No	Intermittent concern exists. Go to “Intermittent Concern Troubleshooting”. (See F5–195 INTERMITTENT CONCERN TROUBLESHOOTING)
2	**INSPECT POOR CONNECTION OF ACCELERATOR POSITION SENSOR NO.2 CONNECTOR** • Turn engine switch to OFF. • Inspect for poor connection (damaged, pulled-out terminals, corrosion, etc.). • Is there any malfunction?	Yes	Repair or replace suspected terminal, go to Step 8.
		No	Go to next step.
3	**INSPECT ACCELERATOR POSITION SENSOR NO.2 POWER CIRCUIT FOR OPEN** • Turn engine switch to ON. (Engine OFF). • Inspect voltage at accelerator position sensor terminal A (harness side). • Is voltage **below 1.0 V**?	Yes	Repair or replace harness for open, go to Step 8.
		No	Go to next step.

STEP	INSPECTION		ACTION
4	**INSPECT ACCELERATOR POSITION SENSOR NO.2 SIGNAL CIRCUIT FOR SHORT TO GND** • Turn engine switch to OFF. • Inspect continuity between accelerator position sensor terminal C and body GND. • Is there continuity?	Yes	Repair or replace harness for short to GND, go to Step 8.
		No	Go to next step.
5	**INSPECT ACCELERATOR POSITION SENSOR NO.2 CIRCUIT FOR SHORT WITH EACH OTHER** • Turn engine switch to OFF. • Inspect continuity between accelerator position sensor terminals C and D. • Is there continuity?	Yes	Repair or replace harness for short with each other, go to Step 8.
		No	Go to next step.
6	**INSPECT ACCELERATOR POSITION SENSOR NO.2** • Inspect accelerator position sensor No.2. (See F5–102 ACCELERATOR POSITION SENSOR INSPECTION) • Is there any malfunction?	Yes	Replace accelerator position sensor, go to Step 8. (See F5–74 ACCELERATOR PEDAL COMPONENT DISASSEMBLY/ASSEMBLY)
		No	Go to next step.
7	**INSPECT POOR CONNECTION OF PCM CONNECTOR** • Turn engine switch to OFF. • Inspect for poor connection (damaged, pulled-out terminals, corrosion, etc.). • Is there any malfunction?	Yes	Repair or replace suspected terminal, go to next step.
		No	Go to next step.
8	**VERIFY TROUBLESHOOTING OF DTC P0222 COMPLETED** • Make sure to reconnect all disconnected connectors. • Clear DTC from PCM memory using WDS or equivalent. • Perform KOEO/KOER self-test. (See F5–116 KOEO/KOER SELF-TEST procedure) • Is same DTC present?	Yes	Replace PCM, go to next step. (See F5–94 PCM REMOVAL/INSTALLATION)
		No	Go to next step.
9	**VERIFY AFTER REPAIR PROCEDURE** • Perform “After Repair Procedure”. (See F5–116 AFTER REPAIR PROCEDURE) • Is there any DTC present?	Yes	Go to applicable DTC inspection. (See F5–117 DTC TABLE)
		No	Troubleshooting completed.

End Of Sie

DTC P0223

AME437001082W28

DTC P0223	Accelerator position sensor No.2 circuit high input
DETECTION CONDITION	• PCM monitors input voltage from accelerator position sensor No.2 while engine is running. If input voltage from accelerator position sensor No.2 is **above 4.7 V**, PCM determines accelerator position sensor No.2 circuit high input.
POSSIBLE CAUSE	• Accelerator position sensor No.2 malfunction • Connector or terminal malfunction • Accelerator position sensor No.2 power and signal circuits short each other • Open circuit in wiring between accelerator position sensor terminal C and PCM terminal 88 • Open circuit in wiring between accelerator position sensor terminal D and PCM terminal 91 • PCM malfunction

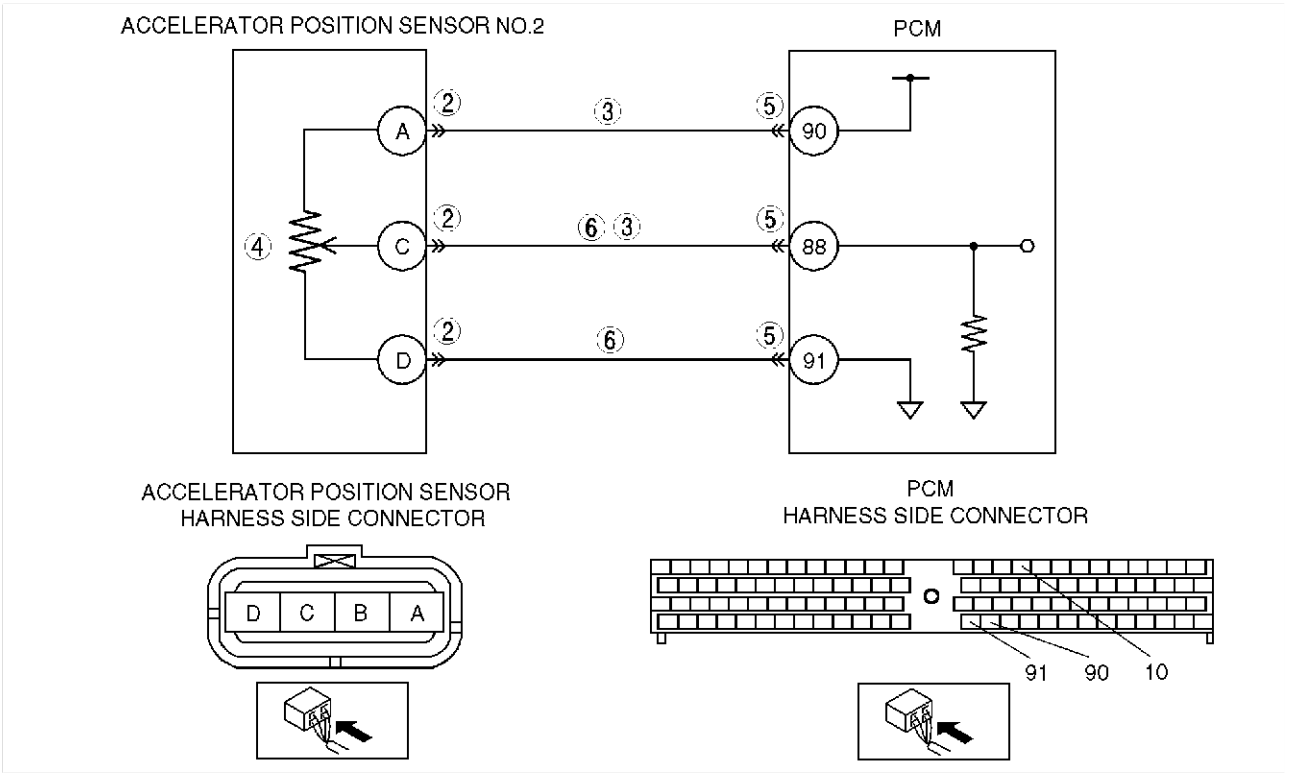

Diagnostic procedure

STEP	INSPECTION		ACTION
1	**PERFORM DTC CONFIRMATION PROCEDURE** • Perform “DTC Confirmation Procedure”. (See F5–115 DTC CONFIRMATION PROCEDURE) • Is same DTC present during KOEO or KOER self-test?	Yes	Go to next step.
		No	Intermittent concern exists. Go to “Intermittent Concern Troubleshooting”. (See F5–195 INTERMITTENT CONCERN TROUBLESHOOTING)
2	**INSPECT POOR CONNECTION OF ACCELERATOR POSITION SENSOR NO.2 CONNECTOR** • Turn engine switch to OFF. • Inspect for poor connection (damaged, pulled-out terminals, corrosion, etc.). • Is there any malfunction?	Yes	Repair or replace suspected terminal, go to Step 7.
		No	Go to next step.
3	**INSPECT ACCELERATOR POSITION SENSOR NO.2 CIRCUIT FOR SHORT WITH EACH OTHER** • Turn engine switch to OFF. • Inspect continuity between accelerator position sensor terminals A and C • Is there continuity?	Yes	Repair or replace harness for short with each other, go to Step 7.
		No	Go to next step.

STEP	INSPECTION		ACTION
4	**INSPECT ACCELERATOR POSITION SENSOR NO.2** • Inspect accelerator position sensor No.2. (See F5–102 ACCELERATOR POSITION SENSOR INSPECTION) • Is there any malfunction?	Yes	Replace accelerator position sensor, go to Step 7. (See F5–74 ACCELERATOR PEDAL COMPONENT DISASSEMBLY/ASSEMBLY)
		No	Go to next step.
5	**INSPECT POOR CONNECTION OF PCM CONNECTOR** • Turn engine switch to OFF. • Inspect for poor connection (damaged, pulled-out terminals, corrosion, etc.). • Is there any malfunction?	Yes	Repair or replace suspected terminal, go to Step 7.
		No	Go to next step.
6	**INSPECT ACCELERATOR POSITION SENSOR NO.2 CIRCUIT FOR OPEN** • Turn engine switch to OFF. • Inspect continuity between following harnesses: — Accelerator position sensor terminal C and PCM terminal 88. — Accelerator position sensor terminal D and PCM terminal 91. • Is there continuity?	Yes	Go to next step.
		No	Repair or replace harness for open, go to Step 7.
7	**VERIFY TROUBLESHOOTING OF DTC P0223 COMPLETED** • Make sure to reconnect all disconnected connectors. • Clear DTC from PCM memory using WDS or equivalent. • Perform KOEO/KOER self-test. (See F5–116 KOEO/KOER SELF-TEST procedure) • Is same DTC present?	Yes	Replace PCM, go to next step. (See F5–94 PCM REMOVAL/INSTALLATION)
		No	Go to next step.
8	**VERIFY AFTER REPAIR PROCEDURE** • Perform “After Repair Procedure”. (See F5–116 AFTER REPAIR PROCEDURE) • Is there any DTC present?	Yes	Go to applicable DTC inspection. (See F5–117 DTC TABLE)
		No	Troubleshooting completed.

End Of Sie

DTC P0300

AME437001082W26

DTC P0300	Random misfire detection
DETECTION CONDITION	• PCM monitors CKP sensor input signal interval time. PCM calculates change of interval time for each cylinder. If the interval time exceeds preprogrammed criteria, PCM determines random misfire detection.
POSSIBLE CAUSE	• Fuel leakage or clogged in fuel line • Fuel injector malfunction • CKP sensor malfunction • CMP sensor malfunction • Inadequate engine compression • PCM malfunction

Diagnostic procedure

STEP	INSPECTION		ACTION
1	**VERIFY RELATED REPAIR INFORMATION AVAILABILITY** • Check for related Service Information availability. • Is any related repair information available?	Yes	Perform repair or diagnosis according to available Service Information. • If vehicle is not repaired, go to next step.
		No	Go to next step.
2	**FOLLOW OTHER DETECTED DTC FIRST** • Turn engine switch to OFF. • Start engine. • Has P0200 been detected?	Yes	Go to DTC P0200 inspection. (See F5–158 DTC P0200)
		No	Go to next step.
3	**INSPECT FUEL LINE** • Turn engine switch to OFF. • Inspect for fuel leakage or clogs in following fuel lines for each cylinder: — Common rail and fuel injector. — Fuel injector and fuel tank. • Is there any malfunction?	Yes	Repair or replace suspected fuel line, go to Step 8.
		No	Go to next step.
4	**INSPECT FUEL INJECTOR** • Inspect fuel injector. (See F5–85 FUEL INJECTOR INSPECTION) • Is there any malfunction?	Yes	Replace fuel injector, go to Step 8. (See F5–84 FUEL INJECTOR REMOVAL/INSTALLATION)
		No	Go to next step.
5	**INSPECT CKP SENSOR** • Inspect CKP sensor. (See F5–112 CRANKSHAFT POSITION (CKP) SENSOR INSPECTION) • Is there any malfunction?	Yes	Replace CKP sensor, go to Step 8. (See F5–111 CRANKSHAFT POSITION (CKP) SENSOR REMOVAL/INSTALLATION)
		No	Go to next step.
6	**INSPECT CMP SENSOR** • Inspect CMP sensor. (See F5–110 CAMSHAFT POSITION (CMP) SENSOR INSPECTION) • Is there any malfunction?	Yes	Replace CMP sensor, go to Step 8. (See F5–110 CAMSHAFT POSITION (CMP) SENSOR REMOVAL/INSTALLATION)
		No	Go to next step.
7	**INSPECT ENGINE COMPRESSION** • Inspect engine compression. (See B4–16 COMPRESSION INSPECTION) • Is there any malfunction?	Yes	Implement engine overhaul for repairs, go to next step.
		No	Go to next step.
8	**VERIFY TROUBLESHOOTING OF DTC P0300 COMPLETED** • Make sure to reconnect all disconnected connectors. • Clear DTC from PCM memory using WDS or equivalent. • Start engine. • Is same DTC present?	Yes	Replace PCM, go to next step. (See F5–94 PCM REMOVAL/INSTALLATION)
		No	Go to next step.
9	**VERIFY AFTER REPAIR PROCEDURE** • Perform “After Repair Procedure”. (See F5–116 AFTER REPAIR PROCEDURE) • Is there any DTC present?	Yes	Go to applicable DTC inspection. (See F5–117 DTC TABLE)
		No	Troubleshooting completed.

End Of Sie

DTC P0336

AME437001082W30

DTC P0336	CKP sensor circuit performance problem
DETECTION CONDITION	• PCM monitors input signal from CKP sensor while engine is running. If input signal from CKP sensor is not proper pulse number, PCM determines CKP sensor circuit performance problem.
POSSIBLE CAUSE	• CKP sensor malfunction • Connector or terminal malfunction • PCM malfunction

Diagnostic procedure

STEP	INSPECTION		ACTION
1	**VERIFY RELATED REPAIR INFORMATION AVAILABILITY** • Check for related Service Information availability. • Is any related repair information available?	Yes	Perform repair or diagnosis according to available Service Information. • If vehicle is not repaired, go to next step.
		No	Go to next step.
2	**VERIFY DTC P0336 DETECTED AGAIN** • Clear DTC from PCM memory using WDS or equivalent. • Start engine. • Is same DTC present?	Yes	Go to next step.
		No	Intermittent concern exists. Go to “Intermittent Concern Troubleshooting”. (See F5–195 INTERMITTENT CONCERN TROUBLESHOOTING)
3	**INSPECT POOR CONNECTION OF CKP SENSOR CONNECTOR** • Turn engine switch to OFF. • Inspect for poor connection (damaged, pulled-out terminals, corrosion, etc.). • Is there any malfunction?	Yes	Repair or replace suspected terminal, go to Step 6.
		No	Go to next step.
4	**INSPECT CKP SENSOR** • Inspect CKP sensor. (See F5–112 CRANKSHAFT POSITION (CKP) SENSOR INSPECTION) • Is there any malfunction?	Yes	Replace CKP sensor, go to Step 6. (See F5–111 CRANKSHAFT POSITION (CKP) SENSOR REMOVAL/INSTALLATION)
		No	Go to next step.
5	**INSPECT POOR CONNECTION OF PCM CONNECTOR** • Turn engine switch to OFF. • Inspect for poor connection (damaged, pulled-out terminals, corrosion, etc.). • Is there any malfunction?	Yes	Repair or replace suspected terminal, go to next step.
		No	Go to next step.
6	**VERIFY TROUBLESHOOTING OF DTC P0336 COMPLETED** • Make sure to reconnect all disconnected connectors. • Clear DTC from PCM memory using WDS or equivalent. • Start engine. • Is same DTC present?	Yes	Replace PCM, go to next step. (See F5–94 PCM REMOVAL/INSTALLATION)
		No	Go to next step.
7	**VERIFY AFTER REPAIR PROCEDURE** • Perform “After Repair Procedure”. (See F5–116 AFTER REPAIR PROCEDURE) • Is there any DTC present?	Yes	Go to applicable DTC inspection. (See F5–117 DTC TABLE)
		No	Troubleshooting completed.

End Of Sie

DTC P0337

AME437001082W31

DTC P0337	CKP sensor circuit low input
DETECTION CONDITION	• PCM monitors input signal from CKP sensor while engine is running. If input signal from CKP sensor is not input at **12 crankshaft revolutions**, PCM determines CKP sensor circuit low input.
POSSIBLE CAUSE	• CKP sensor malfunction • Connector or terminal malfunction • Short to GND in wiring between CKP sensor terminal A and PCM terminal 29 • Short to GND in wiring between CKP sensor terminal B and PCM terminal 3 • Open circuit in wiring between CKP sensor terminal A and PCM terminal 29 • Open circuit in wiring between CKP sensor terminal B and PCM terminal 3 • PCM malfunction

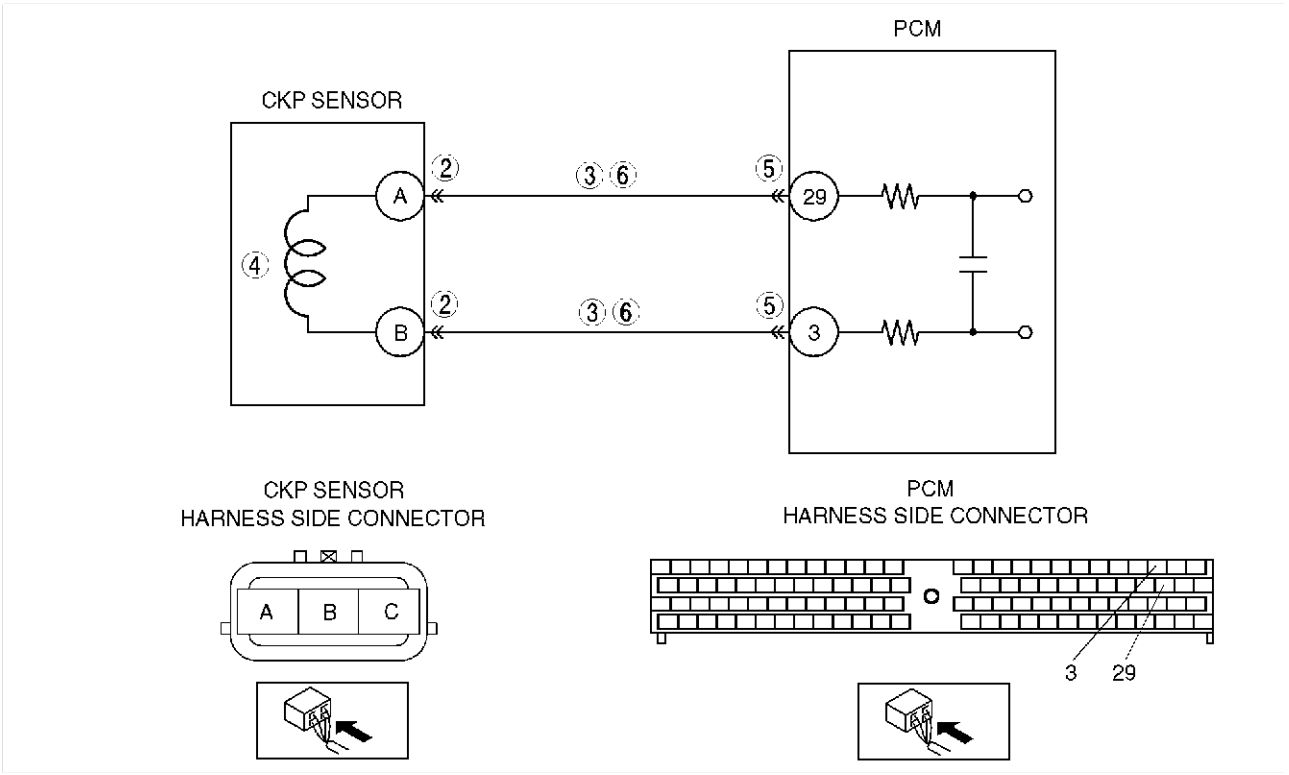

F5

Diagnostic procedure

STEP	INSPECTION		ACTION
1	**VERIFY RELATED REPAIR INFORMATION AVAILABILITY** • Check for related Service Information availability. • Is any related repair information available?	Yes	Perform repair or diagnosis according to available Service Information. • If vehicle is not repaired, go to next step.
		No	Go to next step.
2	**INSPECT POOR CONNECTION OF CKP SENSOR CONNECTOR** • Turn engine switch to OFF. • Inspect for poor connection (damaged, pulled-out terminals, corrosion, etc.). • Is there any malfunction?	Yes	Repair or replace suspected terminal, go to Step 7.
		No	Go to next step.
3	**INSPECT CKP SENSOR CIRCUIT FOR SHORT TO GND** • Turn engine switch to OFF. • Inspect continuity between following harnesses: — CKP sensor terminal A and body GND. — CKP sensor terminal B and body GND. • Is there continuity?	Yes	Repair or replace harness for short to GND, go to Step 7.
		No	Go to next step.

STEP	INSPECTION		ACTION
4	**INSPECT CKP SENSOR** • Inspect CKP sensor. (See F5–112 CRANKSHAFT POSITION (CKP) SENSOR INSPECTION) • Is there any malfunction?	Yes	Replace CKP sensor, go to Step 7. (See F5–111 CRANKSHAFT POSITION (CKP) SENSOR REMOVAL/INSTALLATION)
		No	Go to next step.
5	**INSPECT POOR CONNECTION OF PCM CONNECTOR** • Turn engine switch to OFF. • Inspect for poor connection (damaged, pulled-out terminals, corrosion, etc.). • Is there any malfunction?	Yes	Repair or replace suspected terminal, go to Step 7.
		No	Go to next step.
6	**INSPECT CKP SENSOR CIRCUIT FOR OPEN** • Turn engine switch to OFF. • Inspect continuity between following harnesses: — CKP sensor terminal A and PCM terminal 29. — CKP sensor terminal B and PCM terminal 3. • Is there continuity?	Yes	Go to next step.
		No	Repair or replace harness for open, go to next step.
7	**VERIFY TROUBLESHOOTING OF DTC P0337 COMPLETED** • Make sure to reconnect all disconnected connectors. • Clear DTC from PCM memory using WDS or equivalent. • Start engine. • Is same DTC present?	Yes	Replace PCM, go to next step. (See F5–94 PCM REMOVAL/INSTALLATION)
		No	Go to next step.
8	**VERIFY AFTER REPAIR PROCEDURE** • Perform “After Repair Procedure”. (See F5–116 AFTER REPAIR PROCEDURE) • Is there any DTC present?	Yes	Go to applicable DTC inspection. (See F5–117 DTC TABLE)
		No	Troubleshooting completed.

End Of Sie

DTC P0341

AME437001082W32

DTC P0341	CMP sensor circuit performance problem
DETECTION CONDITION	• PCM monitors input signal from CMP sensor while engine is running. If input signal from CMP sensor is not proper pulse number, PCM determines CMP sensor circuit performance problem.
POSSIBLE CAUSE	• CMP sensor malfunction • Connector or terminal malfunction • PCM malfunction

Diagnostic procedure

STEP	INSPECTION		ACTION
1	**VERIFY RELATED REPAIR INFORMATION AVAILABILITY** • Check for related Service Information availability. • Is any related repair information available?	Yes	Perform repair or diagnosis according to available Service Information. • If vehicle is not repaired, go to next step.
		No	Go to next step.
2	**VERIFY DTC P0341 DETECTED AGAIN** • Clear DTC from PCM memory using WDS or equivalent. • Start engine. • Is same DTC present?	Yes	Go to next step.
		No	Intermittent concern exists. Go to “Intermittent Concern Troubleshooting”. (See F5–195 INTERMITTENT CONCERN TROUBLESHOOTING)
3	**INSPECT POOR CONNECTION OF CMP SENSOR CONNECTOR** • Turn engine switch to OFF. • Inspect for poor connection (damaged, pulled-out terminals, corrosion, etc.). • Is there any malfunction?	Yes	Repair or replace suspected terminal, go to Step 6.
		No	Go to next step.
4	**INSPECT CMP SENSOR** • Inspect CMP sensor. (See F5–110 CAMSHAFT POSITION (CMP) SENSOR INSPECTION) • Is there any malfunction?	Yes	Replace CMP sensor, go to Step 6. (See F5–110 CAMSHAFT POSITION (CMP) SENSOR REMOVAL/INSTALLATION)
		No	Go to next step.
5	**INSPECT POOR CONNECTION OF PCM CONNECTOR** • Turn engine switch to OFF. • Inspect for poor connection (damaged, pulled-out terminals, corrosion, etc.). • Is there any malfunction?	Yes	Repair or replace suspected terminal, go to next step.
		No	Go to next step.
6	**VERIFY TROUBLESHOOTING OF DTC P0341 COMPLETED** • Make sure to reconnect all disconnected connectors. • Clear DTC from PCM memory using WDS or equivalent. • Start engine. • Is same DTC present?	Yes	Replace PCM, go to next step. (See F5–94 PCM REMOVAL/INSTALLATION)
		No	Go to next step.
7	**VERIFY AFTER REPAIR PROCEDURE** • Perform “After Repair Procedure”. (See F5–116 AFTER REPAIR PROCEDURE) • Is there any DTC present?	Yes	Go to applicable DTC inspection. (See F5–117 DTC TABLE)
		No	Troubleshooting completed.

End Of Sie

DTC P0342

AME437001082W34

DTC P0342	CMP sensor circuit low input
DETECTION CONDITION	• PCM monitors input signal from CMP sensor while engine is running. If input signal from CMP sensor is not input at **12 crankshaft revolutions**, PCM determines CMP sensor circuit low input.
POSSIBLE CAUSE	• CMP sensor malfunction • Connector or terminal malfunction • Short to GND in wiring between CMP sensor terminal A and PCM terminal 81 • Short to GND in wiring between CMP sensor terminal B and PCM terminal 55 • Open circuit in wiring between CMP sensor terminal A and PCM terminal 81 • Open circuit in wiring between CMP sensor terminal B and PCM terminal 55 • PCM malfunction

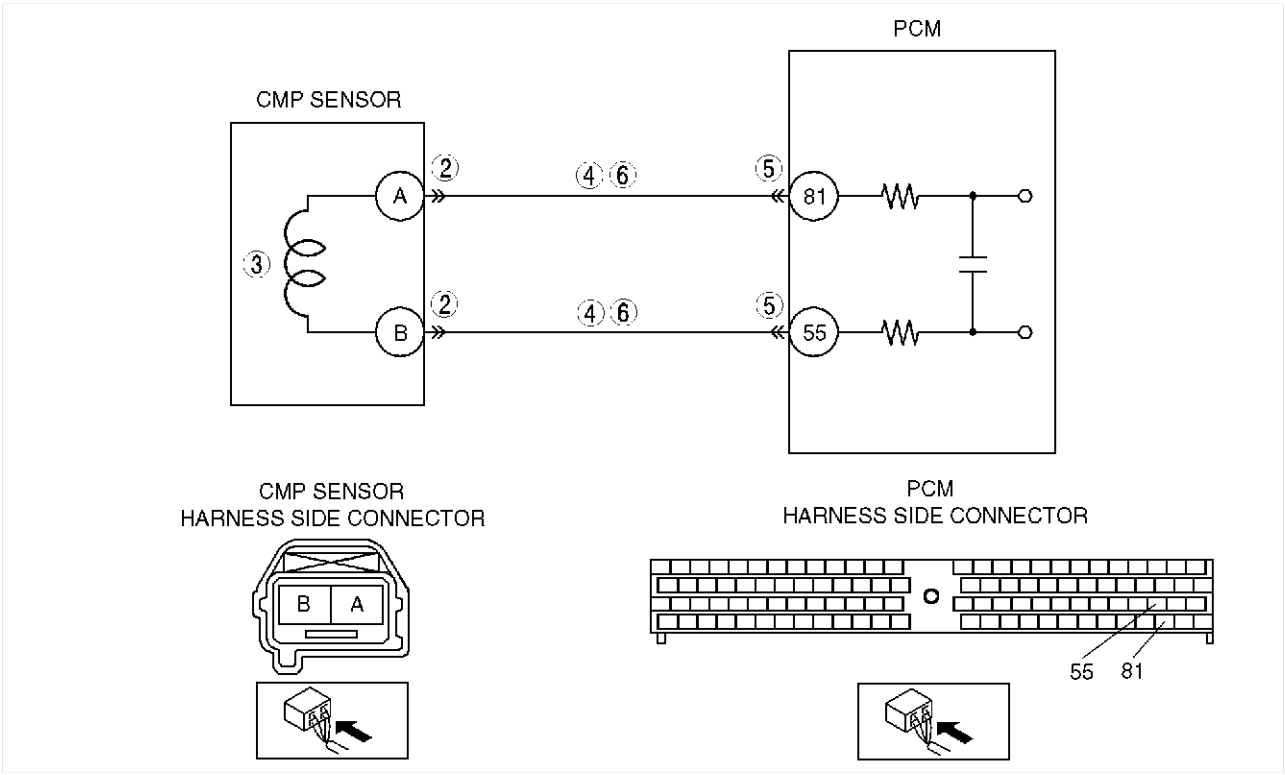

Diagnostic procedure

STEP	INSPECTION		ACTION
1	**VERIFY RELATED REPAIR INFORMATION AVAILABILITY** • Check for related Service Information availability. • Is any related repair information available?	Yes	Perform repair or diagnosis according to available Service Information. • If vehicle is not repaired, go to next step.
		No	Go to next step.

STEP	INSPECTION		ACTION
2	**INSPECT POOR CONNECTION OF CMP SENSOR CONNECTOR** • Turn engine switch to OFF. • Inspect for poor connection (damaged, pulled-out terminals, corrosion, etc.). • Is there any malfunction?	Yes	Repair or replace suspected terminal, go to Step 7.
		No	Go to next step.
3	**INSPECT CMP SENSOR CIRCUIT FOR SHORT TO GND** • Turn engine switch to OFF. • Inspect continuity between following harnesses: — CMP sensor terminal A and body GND. — CMP sensor terminal B and body GND. • Is there continuity?	Yes	Repair or replace harness for short to GND, go to Step 7.
		No	Go to next step.
4	**INSPECT CMP SENSOR** • Inspect CMP sensor. (See F5–110 CAMSHAFT POSITION (CMP) SENSOR INSPECTION) • Is there any malfunction?	Yes	Replace CMP sensor, go to Step 7. (See F5–110 CAMSHAFT POSITION (CMP) SENSOR REMOVAL/INSTALLATION)
		No	Go to next step.
5	**INSPECT POOR CONNECTION OF PCM CONNECTOR** • Turn engine switch to OFF. • Inspect for poor connection (damaged, pulled-out terminals, corrosion, etc.). • Is there any malfunction?	Yes	Repair or replace suspected terminal, go to Step 7.
		No	Go to next step.
6	**INSPECT CMP SENSOR CIRCUIT FOR OPEN** • Turn engine switch to OFF. • Inspect continuity between following harnesses: — CMP sensor terminal A and PCM terminal 81. — CMP sensor terminal B and PCM terminal 55. • Is there continuity?	Yes	Go to next step.
		No	Repair or replace harness for open, go to next step.
7	**VERIFY TROUBLESHOOTING OF DTC P0342 COMPLETED** • Make sure to reconnect all disconnected connectors. • Clear DTC from PCM memory using WDS or equivalent. • Start engine. • Is same DTC present?	Yes	Replace PCM, go to next step. (See F5–94 PCM REMOVAL/INSTALLATION)
		No	Go to next step.
8	**VERIFY AFTER REPAIR PROCEDURE** • Perform “After Repair Procedure”. (See F5–116 AFTER REPAIR PROCEDURE) • Is there any DTC present?	Yes	Go to applicable DTC inspection. (See F5–117 DTC TABLE)
		No	Troubleshooting completed.

End Of Ste

DTC P0380

AME437001082W35

DTC P0380	Glow plug relay circuit malfunction
DETECTION CONDITION	• PCM monitors input voltage from glow plug relay while engine is running. PCM determines glow plug relay circuit malfunction if input voltage from glow plug relay is as following: — **1.0 V or below** when glow plug relay is on. — **4.0 V or above** when glow plug relay is off.
POSSIBLE CAUSE	• Glow plug relay malfunction • Connector or terminal malfunction • Short to GND in wiring between glow plug relay terminal D and PCM terminal 68 • Short to GND in wiring between glow plug fuse and glow plug relay terminal A • Short to GND in wiring between glow plug relay terminal C and PCM terminal 86 • Short to power circuit in wiring between glow plug relay terminal D and PCM terminal 68 • Short to power circuit in wiring between glow plug relay terminal C and PCM terminal 86 • Glow plug relay power and signal circuits short each other • Open circuit in wiring between glow plug fuse and glow plug relay terminal A • Open circuit in wiring between glow plug relay terminal B and GND • Open circuit in wiring between glow plug relay terminal D and PCM terminal 68 • Open circuit in wiring between glow plug relay terminal C and PCM terminal 86 • PCM malfunction

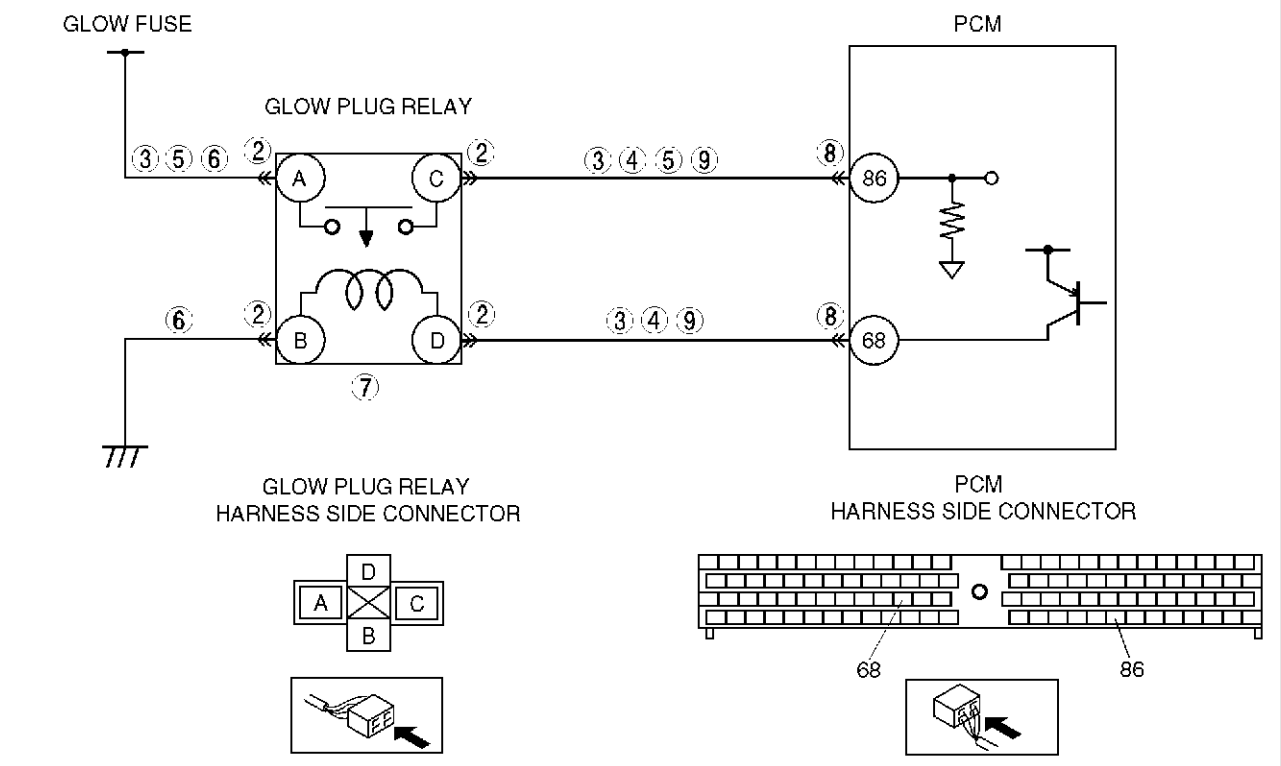

Diagnostic procedure

STEP	INSPECTION		ACTION
1	**VERIFY RELATED REPAIR INFORMATION AVAILABILITY** • Check for related Service Information availability. • Is any related repair information available?	Yes	Perform repair or diagnosis according to available Service Information. • If vehicle is not repaired, go to next step.
		No	Go to next step.
2	**INSPECT POOR CONNECTION OF GLOW PLUG RELAY CONNECTOR** • Turn engine switch to OFF. • Inspect for poor connection (damaged, pulled-out terminals, corrosion, etc.). • Is there any malfunction?	Yes	Repair or replace suspected terminal, go to Step 9.
		No	Go to next step.

STEP	INSPECTION		ACTION
3	**INSPECT GLOW PLUG RELAY CIRCUIT FOR SHORT TO GND** • Turn engine switch to OFF. • Inspect continuity between following harnesses: — Glow plug relay terminal A and body GND. — Glow plug relay terminal C and body GND. — Glow plug relay terminal D and body GND. • Is there continuity?	Yes	Repair or replace harness for short to GND, go to Step 9.
		No	Go to next step.
4	**INSPECT GLOW PLUG RELAY CIRCUIT FOR SHORT TO POWER** • Turn engine switch to ON (Engine OFF). • Inspect voltage between following harnesses: — Glow plug relay terminal C and body GND. — Glow plug relay terminal D and body GND. • Is voltage **below 1.0 V**?	Yes	Go to next step.
		No	Repair or replace harness for short to power, go to Step 9.
5	**INSPECT GLOW PLUG RELAY CIRCUIT FOR SHORT WITH EACH OTHER** • Turn engine switch to OFF. • Inspect continuity between glow plug relay terminals A and C. • Is there continuity?	Yes	Repair or replace harness for short with each other, go to Step 7.
		No	Go to next step.
6	**INSPECT GLOW PLUG RELAY CIRCUIT FOR OPEN** • Turn engine switch to OFF. • Inspect continuity between following harnesses: — Glow plug fuse and glow plug relay terminal A. — Glow plug relay terminal B and body GND. • Is there continuity?	Yes	Go to next step.
		No	Repair or replace harness for open, go to Step 9.
7	**INSPECT GLOW PLUG RELAY** • Inspect glow plug relay. (See T–28 RELAY INSPECTION) • Is there any malfunction?	Yes	Replace glow plug relay, go to Step 9.
		No	Go to next step.
8	**INSPECT POOR CONNECTION OF PCM CONNECTOR** • Turn engine switch to OFF. • Inspect for poor connection (damaged, pulled-out terminals, corrosion, etc.). • Is there any malfunction?	Yes	Repair or replace suspected terminal, go to Step 9.
		No	Go to next step.
9	**INSPECT GLOW PLUG RELAY CIRCUIT FOR OPEN** • Turn engine switch to OFF. • Inspect continuity between following harnesses: — Glow plug relay terminal D and PCM terminal 68. — Glow plug relay terminal C and PCM terminal 86. • Is there continuity?	Yes	Go to next step.
		No	Repair or replace harness for open, go to next step.
10	**VERIFY TROUBLESHOOTING OF DTC P0380 COMPLETED** • Make sure to reconnect all disconnected connectors. • Clear DTC from PCM memory using WDS or equivalent. • Start engine. • Is same DTC present?	Yes	Replace PCM, go to next step. (See F5–94 PCM REMOVAL/INSTALLATION)
		No	Go to next step.
11	**VERIFY AFTER REPAIR PROCEDURE** • Perform “After Repair Procedure”. (See F5–116 AFTER REPAIR PROCEDURE) • Is there any DTC present?	Yes	Go to applicable DTC inspection. (See F5–117 DTC TABLE)
		No	Troubleshooting completed.

End Of Ste

DTC P0500

AME437001082W33

DTC P0500	VSS circuit malfunction
DETECTION CONDITION	• PCM monitors input vehicle speed signal from instrument cluster while engine is running. If input vehicle speed signal from instrument cluster is **0 km/h {0 mph}** when gear is in position other than neutral, clutch pedal is depressed and engine speed is **2,800 rpm or above**, PCM determines VSS circuit malfunction.
POSSIBLE CAUSE	• ABS HU/CM malfunction • Instrument cluster malfunction • Connector or terminal malfunction • Short to GND in wiring between instrument cluster terminal 2O and PCM terminal 6 • Open circuit in wiring between instrument cluster terminal 2O and PCM terminal 6 • Short to GND in wiring between ABS HU/CM terminal Q and instrument cluster terminal 2G • Open circuit in wiring between ABS HU/CM terminal Q and instrument cluster terminal 2G • PCM malfunction

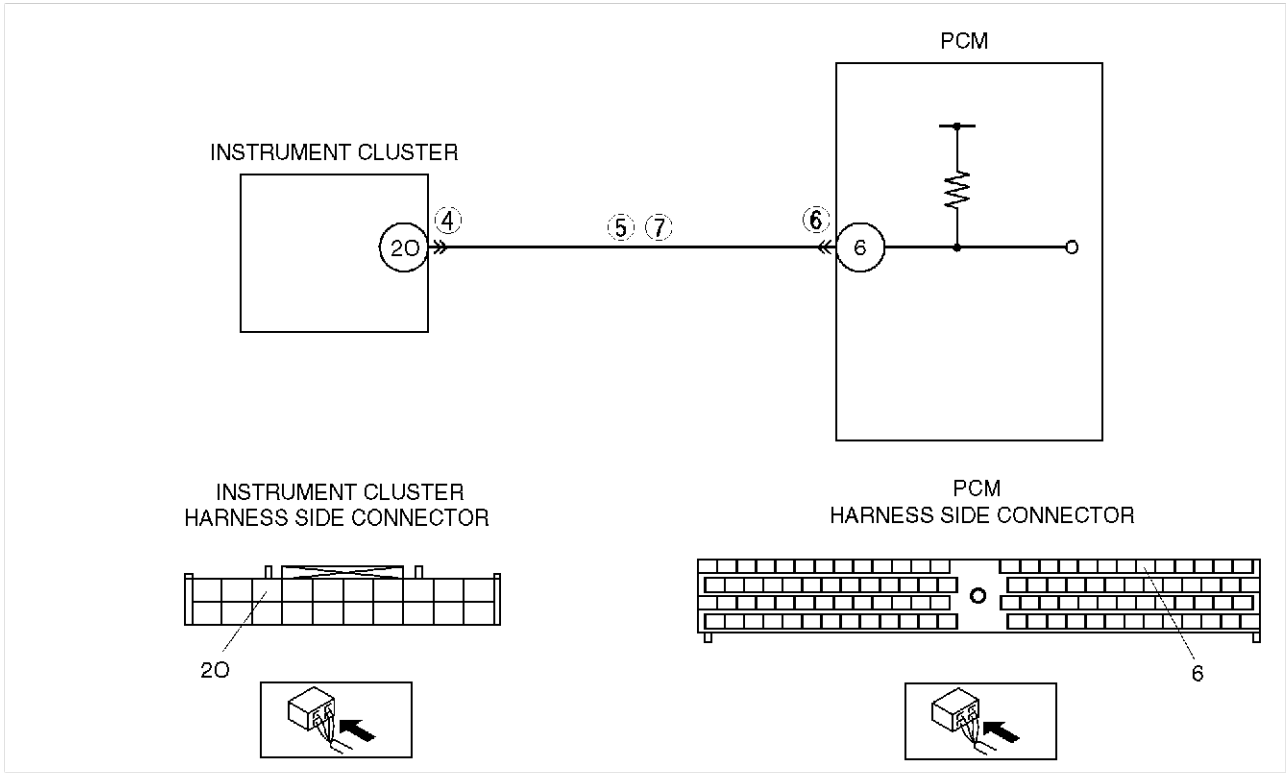

Diagnostic procedure

STEP	INSPECTION		ACTION
1	**VERIFY RELATED REPAIR INFORMATION AVAILABILITY** • Check for related Service Information availability. • Is any related repair information available?	Yes	Perform repair or diagnosis according to available Service Information. • If vehicle is not repaired, go to next step.
		No	Go to next step.
2	**VERIFY CURRENT INPUT SIGNAL STATUS-IS CONCERN INTERMITTENT OR CONSTANT** • Start engine. • Access VSS PID using WDS or equivalent. — Vehicle speed **20 km/h {12.5 mph}**: **20 km/h {12.5 mph}** — Vehicle speed **40 km/h {25 mph}**: **40 km/h {25 mph}** • Is VSS PID readings within specification?	Yes	Intermittent concern exists. Go to “Intermittent Concern Troubleshooting”. (See F5–195 INTERMITTENT CONCERN TROUBLESHOOTING)
		No	Go to next step.

STEP	INSPECTION		ACTION
3	**CHECK INPUT/OUTPUT CHECK MODE** • Turn engine switch to ON (Engine OFF). • Is instrument cluster DTC 10 or 12 detected? (See T–37 INSTRUMENT CLUSTER INPUT/ OUTPUT CHECK MODE)	Yes	DTC 10 and/or 12 displayed: inspect instrument cluster. (See T–37 INSTRUMENT CLUSTER INPUT/OUTPUT CHECK MODE)
		No	Go to next step.
4	**INSPECT POOR CONNECTION OF INSTRUMENT CLUSTER CONNECTOR** • Turn engine switch to OFF. • Inspect for poor connection (damaged, pulled-out terminals, corrosion, etc.). • Is there any malfunction?	Yes	Repair or replace suspected terminal, go to Step 8.
		No	Go to next step.
5	**INSPECT VEHICLE SPEED SIGNAL CIRCUIT FOR SHORT TO GND** • Turn engine switch to OFF. • Inspect continuity between instrument cluster terminal 2O and body GND. • Is there continuity?	Yes	Repair or replace harness for short to GND, go to Step 8.
		No	Go to next step.
6	**INSPECT POOR CONNECTION OF PCM CONNECTOR** • Turn engine switch to OFF. • Inspect for poor connection (damaged, pulled-out terminals, corrosion, etc.). • Is there any malfunction?	Yes	Repair or replace suspected terminal, go to Step 8.
		No	Go to next step.
7	**INSPECT VEHICLE SPEED SIGNAL CIRCUIT FOR OPEN** • Turn engine switch to OFF. • Inspect continuity between instrument cluster terminal 2O and PCM terminal 6. • Is there continuity?	Yes	Go to next step.
		No	Repair or replace harness for open, go to next step.
8	**VERIFY TROUBLESHOOTING OF DTC P0500 COMPLETED** • Make sure to reconnect all disconnected connectors. • Clear DTC from PCM memory using WDS or equivalent. • Start engine. • Is same DTC present?	Yes	Replace PCM, go to next step. (See F5–94 PCM REMOVAL/INSTALLATION)
		No	Go to next step.
9	**VERIFY AFTER REPAIR PROCEDURE** • Perform “After Repair Procedure”. (See F5–116 AFTER REPAIR PROCEDURE) • Is there any DTC present?	Yes	Go to applicable DTC inspection. (See F5–117 DTC TABLE)
		No	Troubleshooting completed.

End Of Sie

F5

DTC P0510

AME437001082W36

DTC P0510	Idle switch circuit malfunction
DETECTION CONDITION	• PCM monitors input voltage from idle switch while engine is running. If input voltage from idle switch is **B+** when accelerator position sensor No.1 voltage is **below 0.7 V**, PCM determines idle switch circuit malfunction.
POSSIBLE CAUSE	• Idle switch malfunction • Connector or terminal malfunction • Open circuit in wiring between idle switch terminal B and GND • Open circuit in wiring between idle switch terminal A and PCM terminal 31 • PCM malfunction

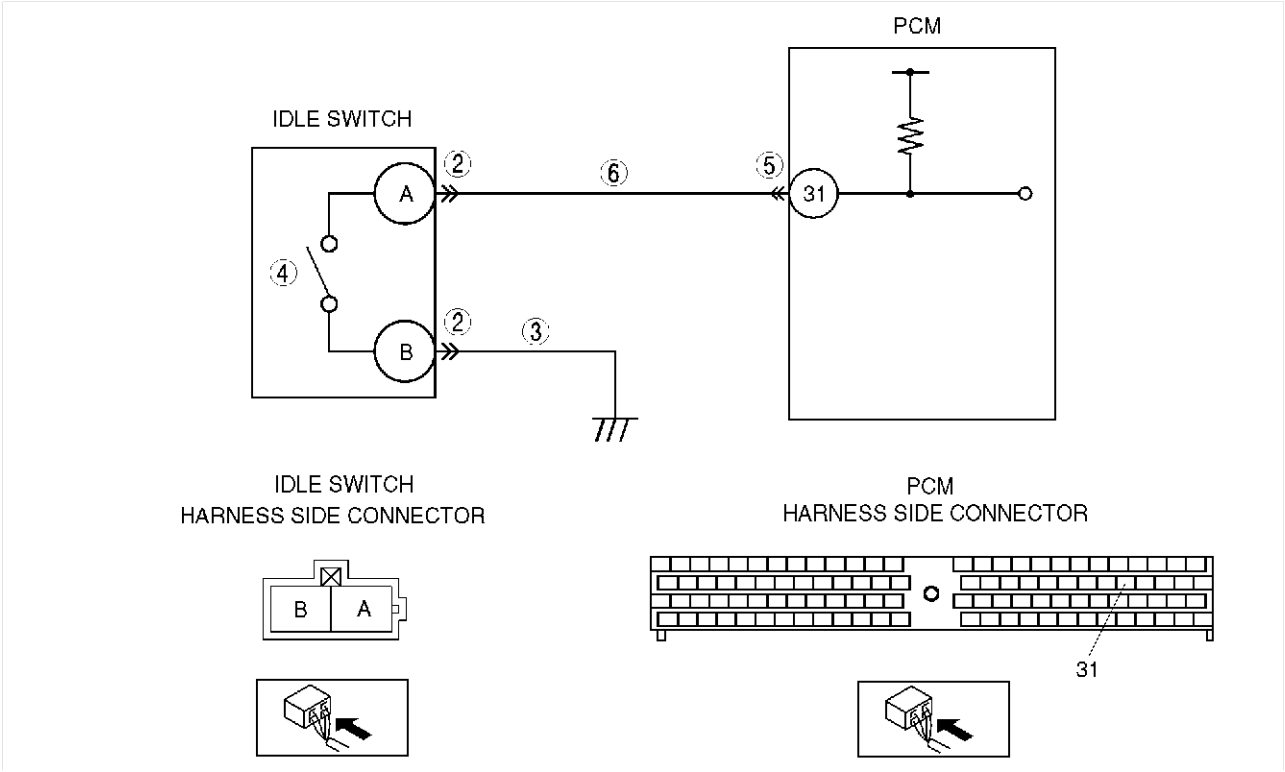

Diagnostic procedure

STEP	INSPECTION		ACTION
1	**VERIFY RELATED REPAIR INFORMATION AVAILABILITY** • Check for related Service Information availability. • Is any related repair information available?	Yes	Perform repair or diagnosis according to available Service Information. • If vehicle is not repaired, go to next step.
		No	Go to next step.

STEP	INSPECTION		ACTION
2	**INSPECT POOR CONNECTION OF IDLE SWITCH CONNECTOR** • Turn engine switch to OFF. • Inspect for poor connection (damaged, pulled-out terminals, corrosion, etc.). • Is there any malfunction?	Yes	Repair or replace suspected terminal, go to Step 7.
		No	Go to next step.
3	**INSPECT IDLE SWITCH GND CIRCUIT FOR OPEN** • Turn engine switch to OFF. • Inspect continuity between idle switch terminal B and body GND. • Is there continuity?	Yes	Go to next step.
		No	Repair or replace harness for open, go to Step 7.
4	**INSPECT IDLE SWITCH** • Inspect idle switch. (See F5–100 IDLE SWITCH INSPECTION) • Is there any malfunction?	Yes	Replace idle switch, go to Step 7. (See F5–74 ACCELERATOR PEDAL COMPONENT DISASSEMBLY/ASSEMBLY)
		No	Go to next step.
5	**INSPECT POOR CONNECTION OF PCM CONNECTOR** • Turn engine switch to OFF. • Inspect for poor connection (damaged, pulled-out terminals, corrosion, etc.). • Is there any malfunction?	Yes	Repair or replace suspected terminal, go to Step 7.
		No	Go to next step.
6	**INSPECT IDLE SWITCH SIGNAL CIRCUIT FOR OPEN** • Turn engine switch to OFF. • Inspect continuity between idle switch terminal A and PCM terminal 31. • Is there continuity?	Yes	Go to next step.
		No	Repair or replace harness for open, go to next step.
7	**VERIFY TROUBLESHOOTING OF DTC P0510 COMPLETED** • Make sure to reconnect all disconnected connectors. • Clear DTC from PCM memory using WDS or equivalent. • Start engine. • Is same DTC present?	Yes	Replace PCM, go to next step. (See F5–94 PCM REMOVAL/INSTALLATION)
		No	Go to next step.
8	**VERIFY AFTER REPAIR PROCEDURE** • Perform “After Repair Procedure”. (See F5–116 AFTER REPAIR PROCEDURE) • Is there any DTC present?	Yes	Go to applicable DTC inspection. (See F5–117 DTC TABLE)
		No	Troubleshooting completed.

End Of Ste

DTC P0512

AME437001082W37

DTC P0512	Engine switch circuit malfunction
DETECTION CONDITION	• PCM monitors input voltage from engine switch while engine is running. If input voltage from engine switch is **B+** when engine speed is **1,200 rpm or above**, PCM determines engine switch circuit malfunction.
POSSIBLE CAUSE	• Engine switch malfunction • Connector or terminal malfunction • Short to power circuit in wiring between engine switch terminal A and PCM terminal 57 • PCM malfunction

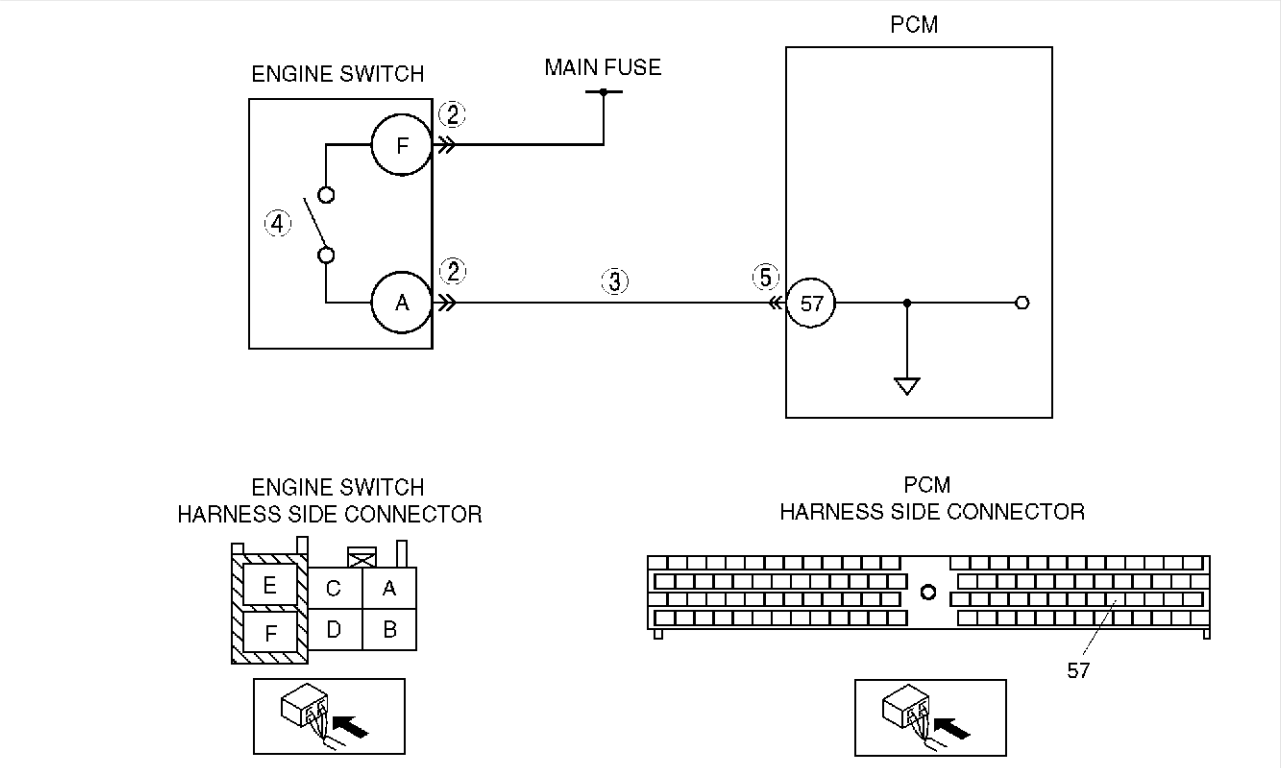

Diagnostic procedure

STEP	INSPECTION		ACTION
1	**VERIFY RELATED REPAIR INFORMATION AVAILABILITY** • Check for related Service Information availability. • Is any related repair information available?	Yes	Perform repair or diagnosis according to available Service Information. • If vehicle is not repaired, go to next step.
		No	Go to next step.
2	**INSPECT POOR CONNECTION OF ENGINE SWITCH CONNECTOR** • Turn engine switch to OFF. • Inspect for poor connection (damaged, pulled-out terminals, corrosion, etc.). • Is there any malfunction?	Yes	Repair or replace suspected terminal, go to Step 6.
		No	Go to next step.

STEP	INSPECTION		ACTION
3	**INSPECT ENGINE SWITCH SIGNAL CIRCUIT FOR SHORT TO POWER** • Turn engine switch to ON (Engine OFF). • Inspect voltage between engine switch terminal A and body GND. • Is voltage **below 1.0 V**?	Yes	Go to next step.
		No	Repair or replace harness for short to power, go to Step 6.
4	**INSPECT ENGINE SWITCH** • Inspect engine switch. • Is there any malfunction?	Yes	Replace engine switch, go to Step 6.
		No	Go to next step.
5	**INSPECT POOR CONNECTION OF PCM CONNECTOR** • Turn engine switch to OFF. • Inspect for poor connection (damaged, pulled-out terminals, corrosion, etc.). • Is there any malfunction?	Yes	Repair or replace suspected terminal, go to next step.
		No	Go to next step.
6	**VERIFY TROUBLESHOOTING OF DTC P0512 COMPLETED** • Make sure to reconnect all disconnected connectors. • Clear DTC from PCM memory using WDS or equivalent. • Start engine. • Is same DTC present?	Yes	Replace PCM, go to next step. (See F5–94 PCM REMOVAL/INSTALLATION)
		No	Go to next step.
7	**VERIFY AFTER REPAIR PROCEDURE** • Perform “After Repair Procedure”. (See F5–116 AFTER REPAIR PROCEDURE) • Is there any DTC present?	Yes	Go to applicable DTC inspection. (See F5–117 DTC TABLE)
		No	Troubleshooting completed.

End Of Ste

DTC P0606

AME437001082W38

DTC P0606	PCM malfunction
DETECTION CONDITION	• PCM does not read DTC from output devices.
POSSIBLE CAUSE	• PCM internal malfunction

Diagnostic procedure

STEP	INSPECTION		ACTION
1	–	–	Replace PCM and reprogram immobilizer system. (See F5–94 PCM REMOVAL/INSTALLATION) (See T–58 IMMOBILIZER SYSTEM REPROGRAM PROCEDURE)

End Of Ste

DTC P0661

AME437001082W43

DTC P0661	VSC solenoid valve circuit low input
DETECTION CONDITION	• PCM monitors input voltage from VSC solenoid valve while engine is running. If input voltage from VSC solenoid valve is **below 0.1 V**, PCM determines suction control valve circuit low input.
POSSIBLE CAUSE	• VSC solenoid valve malfunction • Connector or terminal malfunction • Short to GND in wiring between VSC solenoid valve terminal A and PCM control relay terminal C • Short to GND in wiring between VSC solenoid valve terminal B and PCM terminal 101 • Open circuit in wiring between VSC solenoid valve terminal PCM control relay terminal C • Open circuit in wiring between VSC solenoid valve terminal B and PCM terminal 101 • PCM malfunction

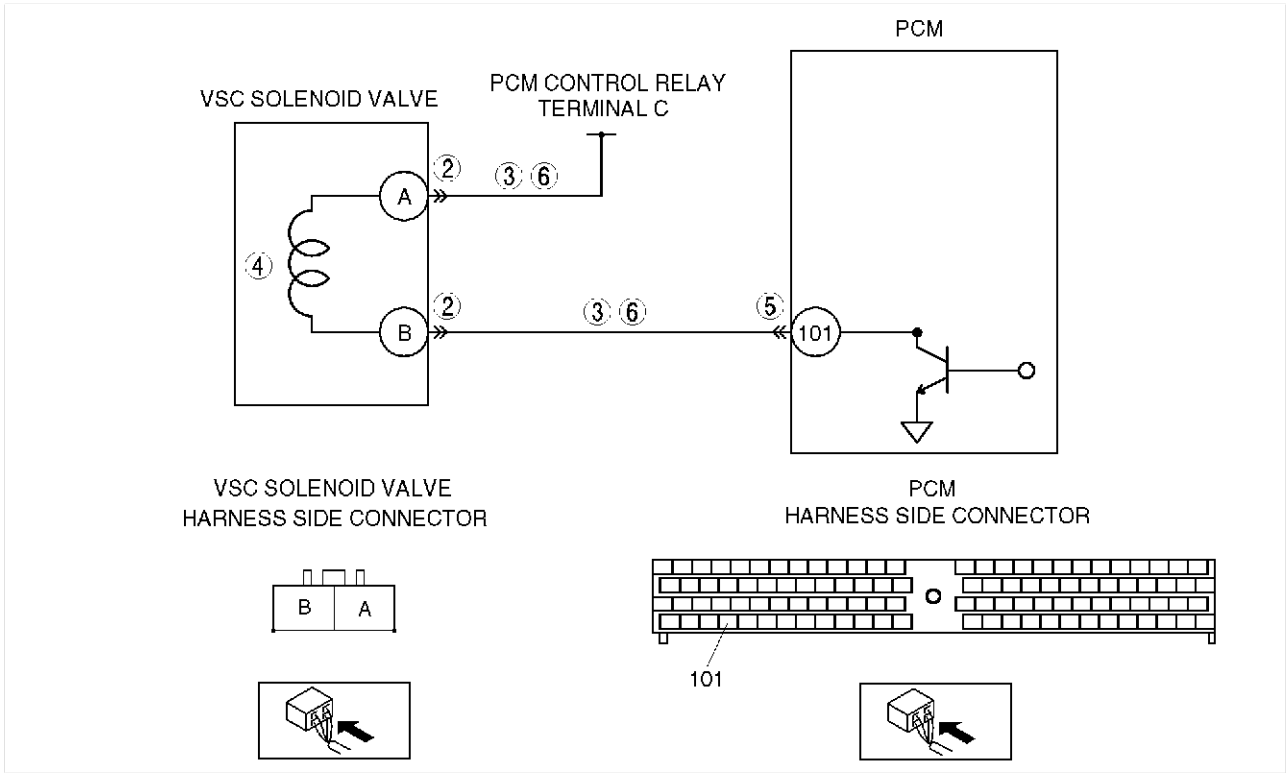

Diagnostic procedure

STEP	INSPECTION		ACTION
1	**PERFORM DTC CONFIRMATION PROCEDURE** • Perform “DTC Confirmation Procedure”. (See F5–115 DTC CONFIRMATION PROCEDURE) • Is same DTC present during KOEO or KOER self-test?	Yes	Go to next step.
		No	Intermittent concern exists. Go to “Intermittent Concern Troubleshooting”. (See F5–195 INTERMITTENT CONCERN TROUBLESHOOTING)
2	**INSPECT POOR CONNECTION OF VSC SOLENOID VALVE CONNECTOR** • Turn engine switch to OFF. • Inspect for poor connection (damaged, pulled-out terminals, corrosion, etc.). • Is there any malfunction?	Yes	Repair or replace suspected terminal, go to Step 7.
		No	Go to next step.

STEP	INSPECTION		ACTION
3	**INSPECT VSC SOLENOID VALVE CIRCUIT FOR SHORT TO GND** • Turn engine switch to OFF. • Inspect continuity between following harnesses: — VSC solenoid valve terminal A and PCM control relay terminal C. — VSC solenoid valve terminal B and PCM terminal 101. • Is there continuity?	Yes	Repair or replace harness for short to GND, go to Step 7.
		No	Go to next step.
4	**INSPECT VSC SOLENOID VALVE** • Inspect VSC solenoid valve. (See F5–72 VARIABLE SWIRL CONTROL (VSC) SOLENOID VALVE INSPECTION) • Is there any malfunction?	Yes	Replace VSC solenoid valve, go to Step 7.
		No	Go to next step.
5	**INSPECT POOR CONNECTION OF PCM CONNECTOR** • Turn engine switch to OFF. • Inspect for poor connection (damaged, pulled-out terminals, corrosion, etc.). • Is there any malfunction?	Yes	Repair or replace suspected terminal, go to Step 7.
		No	Go to next step.
6	**INSPECT VSC SOLENOID VALVE CIRCUIT FOR OPEN** • Turn engine switch to OFF. • Inspect continuity between following harnesses: — VSC solenoid valve terminal A and PCM control relay terminal C. — VSC solenoid valve terminal B and PCM terminal 101. • Is there continuity?	Yes	Go to next step.
		No	Repair or replace harness for open, go to next step.
7	**VERIFY TROUBLESHOOTING OF DTC P0661 COMPLETED** • Make sure to reconnect all disconnected connectors. • Clear DTC from PCM memory using WDS or equivalent. • Start engine. • Is same DTC present?	Yes	Replace PCM, go to next step. (See F5–94 PCM REMOVAL/INSTALLATION)
		No	Go to next step.
8	**VERIFY AFTER REPAIR PROCEDURE** • Perform “After Repair Procedure”. (See F5–116 AFTER REPAIR PROCEDURE) • Is there any DTC present?	Yes	Go to applicable DTC inspection. (See F5–117 DTC TABLE)
		No	Troubleshooting completed.

End Of Ste

DTC P0662

AME437001082W44

DTC P0662	VSC solenoid valve circuit high input
DETECTION CONDITION	• PCM monitors input voltage from VSC solenoid valve while engine is running. If input voltage from VSC solenoid valve is **above B+**, PCM determines suction control valve circuit high input.
POSSIBLE CAUSE	• VSC solenoid valve malfunction • Connector or terminal malfunction • Short to power circuit in wiring between VSC solenoid valve terminal B and PCM terminal 101 • PCM malfunction

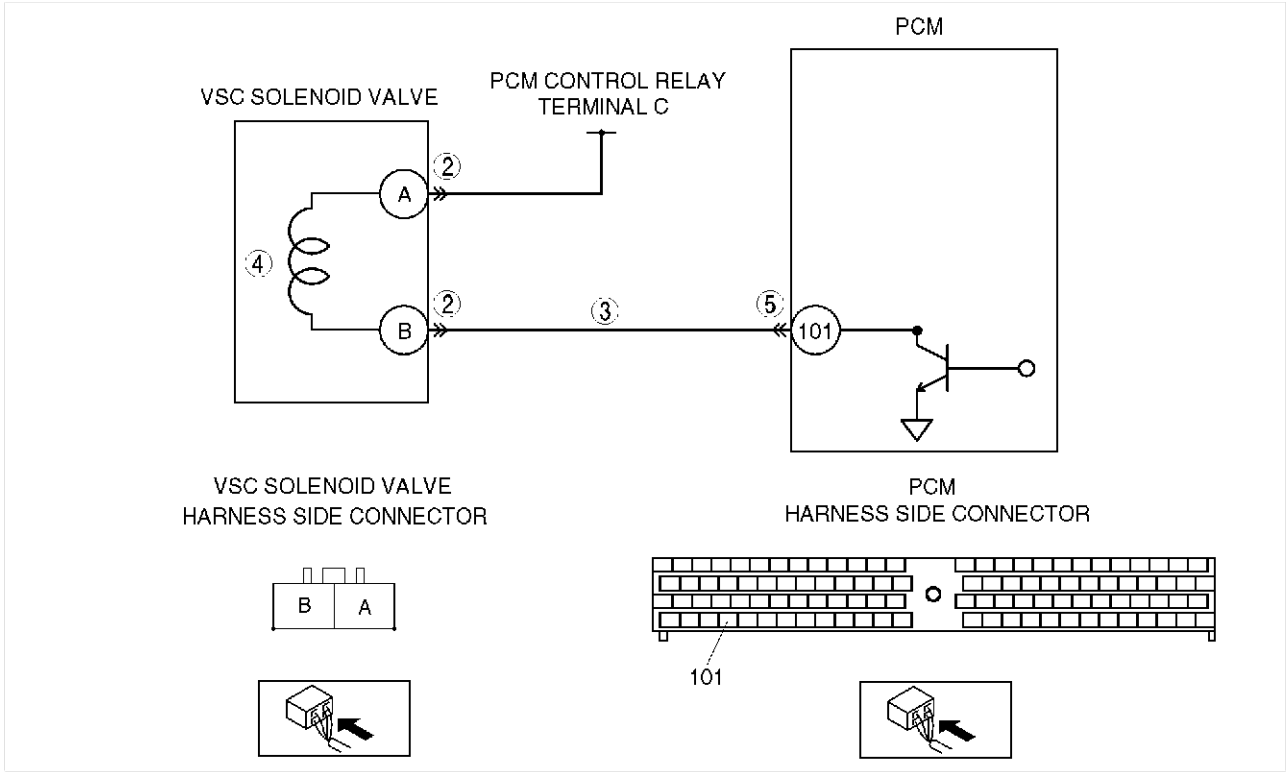

Diagnostic procedure

STEP	INSPECTION		ACTION
1	**PERFORM DTC CONFIRMATION PROCEDURE** • Perform “DTC Confirmation Procedure”. (See F5–115 DTC CONFIRMATION PROCEDURE) • Is same DTC present during KOEO or KOER self-test?	Yes	Go to next step.
		No	Intermittent concern exists. Go to “Intermittent Concern Troubleshooting”. (See F5–195 INTERMITTENT CONCERN TROUBLESHOOTING)

STEP	INSPECTION		ACTION
2	**INSPECT POOR CONNECTION OF VSC SOLENOID VALVE CONNECTOR** • Turn engine switch to OFF. • Inspect for poor connection (damaged, pulled-out terminals, corrosion, etc.). • Is there any malfunction?	Yes	Repair or replace suspected terminal, go to Step 6.
		No	Go to next step.
3	**INSPECT VSC SOLENOID VALVE CIRCUIT FOR SHORT TO POWER** • Turn engine switch to ON (Engine switch OFF). • Inspect voltage between VSC solenoid valve terminal B and body GND. • Is voltage **below 1.0 V**?	Yes	Go to next step.
		No	Repair or replace harness for short to power, go to Step 6.
4	**INSPECT VSC SOLENOID VALVE** • Inspect VSC solenoid valve. (See F5–72 VARIABLE SWIRL CONTROL (VSC) SOLENOID VALVE INSPECTION) • Is there any malfunction?	Yes	Replace VSC solenoid valve, go to Step 5.
		No	Go to next step.
5	**INSPECT POOR CONNECTION OF PCM CONNECTOR** • Turn engine switch to OFF. • Inspect for poor connection (damaged, pulled-out terminals, corrosion, etc.). • Is there any malfunction?	Yes	Repair or replace suspected terminal, go to next step.
		No	Go to next step.
6	**VERIFY TROUBLESHOOTING OF DTC P0662 COMPLETED** • Make sure to reconnect all disconnected connectors. • Clear DTC from PCM memory using WDS or equivalent. • Start engine. • Is same DTC present?	Yes	Replace PCM, go to next step. (See F5–94 PCM REMOVAL/INSTALLATION)
		No	Go to next step.
7	**VERIFY AFTER REPAIR PROCEDURE** • Perform “After Repair Procedure”. (See F5–116 AFTER REPAIR PROCEDURE) • Is there any DTC present?	Yes	Go to applicable DTC inspection. (See F5–117 DTC TABLE)
		No	Troubleshooting completed.

End Of Sie

DTC P0850

AME437001082W39

DTC P0850	Neutral switch circuit malfunction
DETECTION CONDITION	• PCM monitors input voltage from neutral switch while engine is running. If input voltage from neutral switch does not change when vehicle stops after accelerating to **above 60 km/h {37 mph}** and decelerating to 0 km/h {0 mph} two times, PCM determines neutral switch circuit malfunction.
POSSIBLE CAUSE	• Neutral switch malfunction • Connector or terminal malfunction • Short to GND in wiring between neutral switch terminal A and PCM terminal 56 • Open circuit in wiring between neutral switch terminal B and GND • Open circuit in wiring between neutral switch terminal A and PCM terminal 56 • PCM malfunction

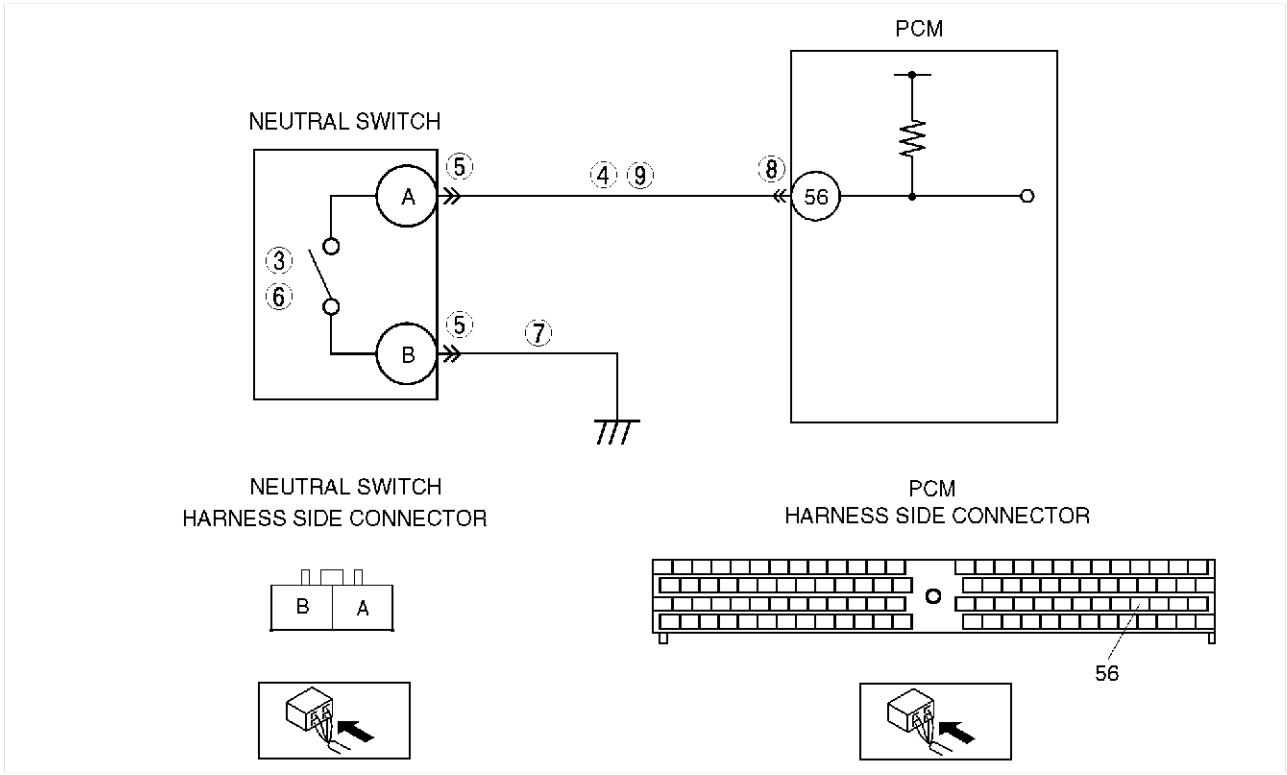

Diagnostic procedure

STEP	INSPECTION		ACTION
1	**VERIFY RELATED REPAIR INFORMATION AVAILABILITY** • Check for related Service Information availability. • Is any related repair information available?	Yes	Perform repair or diagnosis according to available Service Information. • If vehicle is not repaired, go to next step.
		No	Go to next step.
2	**CLASSIFY MALFUNCTION OF SHORT TO GND OR OPEN** • Turn engine switch to ON (Engine OFF). • Engage gear. • Access CPP/PNP PID using WDS or equivalent. • Is CPP/PNP PID OFF?	Yes	Go to Step 5.
		No	Go to next step.
3	**INSPECT NEUTRAL SWITCH FOR CLOSE STUCK** • Turn engine switch to ON (Engine OFF). • Disconnect neutral switch connector. • Access CPP/PNP PID using WDS or equivalent. • Is CPP/PNP PID OFF?	Yes	Replace neutral switch, go to Step 10.
		No	Go to next step.

STEP	INSPECTION		ACTION
4	**INSPECT NEUTRAL SWITCH SIGNAL CIRCUIT FOR SHORT TO GND** • Turn engine switch to OFF. • Inspect continuity between neutral switch terminal A and body GND. • Is there continuity?	Yes	Repair or replace harness for short to GND, go to Step 10.
		No	Go to next step.
5	**INSPECT POOR CONNECTION OF NEUTRAL SWITCH CONNECTOR** • Turn engine switch to OFF. • Inspect for poor connection (damaged, pulled-out terminals, corrosion, etc.). • Is there any malfunction?	Yes	Repair or replace suspected terminal, go to Step 10.
		No	Go to next step.
6	**INSPECT NEUTRAL SWITCH FOR OPEN STUCK** • Turn engine switch to ON (Engine OFF). • Disconnect neutral switch connector. • Connect jumper wire between neutral switch connector terminals. • Access CPP/PNP PID using WDS or equivalent. • Is CPP/PNP PID ON?	Yes	Replace neutral switch, go to Step 10.
		No	Go to next step.
7	**INSPECT NEUTRAL SWITCH GND CIRCUIT FOR OPEN** • Turn engine switch to OFF. • Inspect continuity between neutral switch terminal B and body GND. • Is there continuity?	Yes	Go to next step.
		No	Repair or replace harness for open, go to Step 10.
8	**INSPECT POOR CONNECTION OF PCM CONNECTOR** • Turn engine switch to OFF. • Inspect for poor connection (damaged, pulled-out terminals, corrosion, etc.). • Is there any malfunction?	Yes	Repair or replace suspected terminal, go to Step 10.
		No	Go to next step.
9	**INSPECT NEUTRAL SWITCH SIGNAL CIRCUIT FOR OPEN** • Turn engine switch to OFF. • Inspect continuity between neutral switch terminal A and PCM terminal 56. • Is there continuity?	Yes	Go to next step.
		No	Repair or replace harness for open, go to next step.
10	**VERIFY TROUBLESHOOTING OF DTC P0850 COMPLETED** • Make sure to reconnect all disconnected connectors. • Clear DTC from PCM memory using WDS or equivalent. • Start engine. • Is same DTC present?	Yes	Replace PCM, go to next step. (See F5–94 PCM REMOVAL/INSTALLATION)
		No	Go to next step.
11	**VERIFY AFTER REPAIR PROCEDURE** • Perform “After Repair Procedure”. (See F5–116 AFTER REPAIR PROCEDURE) • Is there any DTC present?	Yes	Go to applicable DTC inspection. (See F5–117 DTC TABLE)
		No	Troubleshooting completed.

End Of Ste

DTC P1190

AME437001083W16

DTC P1190	Calibration resistor circuit malfunction
DETECTION CONDITION	• PCM monitors input voltage from calibration resistor while engine is running. If input voltage from calibration resistor is **below 0.2 V** or above 4.8 V, PCM determines calibration resistor circuit malfunction.
POSSIBLE CAUSE	• Calibration resistor malfunction • Connector or terminal malfunction • Short to GND in wiring between calibration resistor terminal A and PCM terminal 37, 62, 89, 11 • Short to power circuit in wiring between calibration resistor terminal A and PCM terminal 37, 62, 89, 11 • Open circuit in wiring between calibration resistor terminal A and PCM terminal 37, 62, 89, 11 • Open circuit in wiring between calibration resistor terminal C and PCM terminal 91 • PCM malfunction

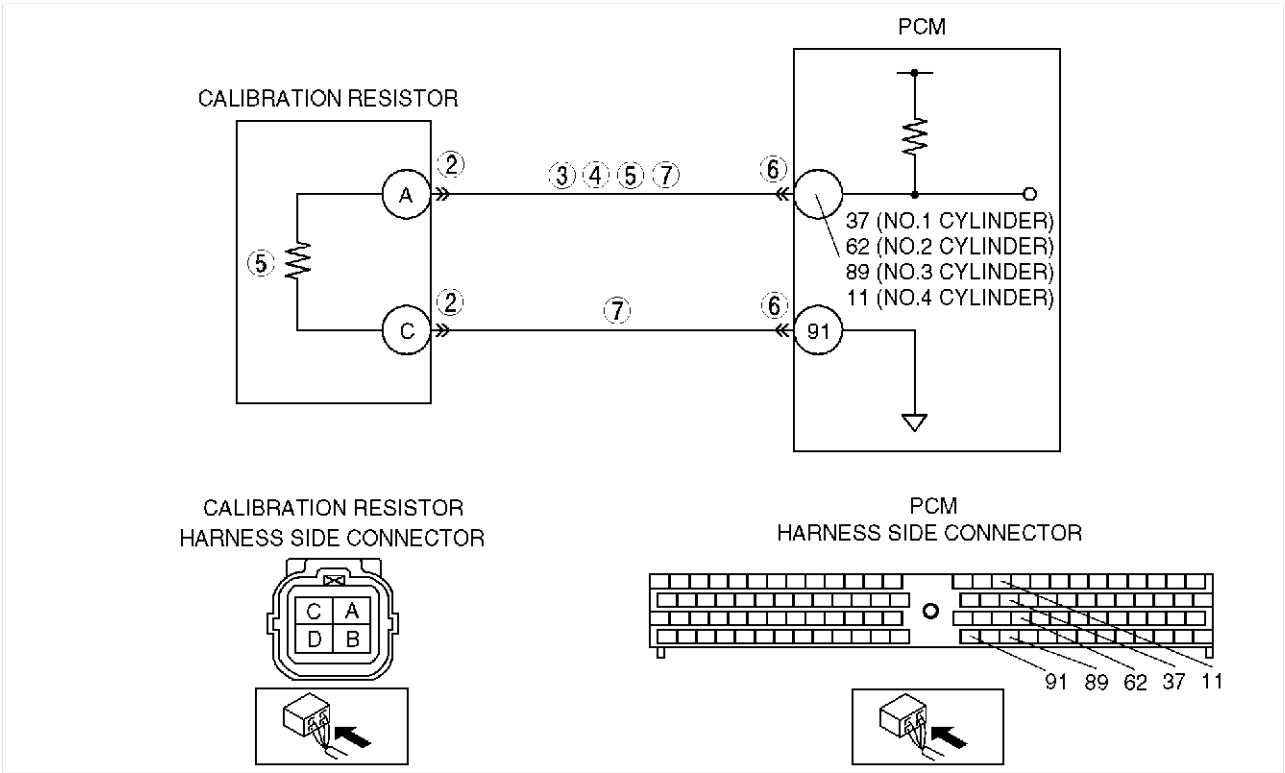

Diagnostic procedure

STEP	INSPECTION		ACTION
1	**VERIFY RELATED REPAIR INFORMATION AVAILABILITY** • Check for related Service Information availability. • Is any related repair information available?	Yes	Perform repair or diagnosis according to available Service Information. • If vehicle is not repaired, go to next step.
		No	Go to next step.
2	**INSPECT POOR CONNECTION OF CALIBRATION RESISTOR CONNECTOR** • Turn engine switch to OFF. • Inspect for poor connection (damaged, pulled-out terminals, corrosion, etc.). • Is there any malfunction?	Yes	Repair or replace suspected terminal, go to Step 8.
		No	Go to next step.

STEP	INSPECTION		ACTION
3	**INSPECT CALIBRATION RESISTOR SIGNAL CIRCUIT FOR SHORT TO GND** • Turn engine switch to OFF. • Inspect continuity between calibration resistor terminal A and body GND. • Is there continuity?	Yes	Repair or replace harness for short to GND, go to Step 8.
		No	Go to next step.
4	**INSPECT CALIBRATION RESISTOR SIGNAL CIRCUIT FOR SHORT TO POWER** • Turn engine switch to ON (Engine OFF). • Inspect voltage between calibration resistor terminal A and body GND. • Is voltage **below 1.0V**?	Yes	Go to next step.
		No	Repair or replace harness for short to power, go to Step 8.
5	**INSPECT CALIBRATION RESISTOR** • Inspect calibration resistor. (See F5–113 CALIBRATION RESISTOR INSPECTION) • Is there any malfunction?	Yes	Replace calibration resistor, go to Step 8.
		No	Go to next step.
6	**INSPECT POOR CONNECTION OF PCM CONNECTOR** • Turn engine switch to OFF. • Inspect for poor connection (damaged, pulled-out terminals, corrosion, etc.). • Is there any malfunction?	Yes	Repair or replace suspected terminal, go to Step 8.
		No	Go to next step.
7	**INSPECT CALIBRATION RESISTOR CIRCUIT FOR OPEN** • Turn engine switch to OFF. • Inspect continuity between following harnesses: — Calibration resistor terminal A and PCM terminal 37, 62, 89, 11. — Calibration resistor terminal C and PCM terminal 91. • Is there continuity?	Yes	Go to next step.
		No	Repair or replace harness for open, go to next step.
8	**VERIFY TROUBLESHOOTING OF DTC P1190 COMPLETED** • Make sure to reconnect all disconnected connectors. • Clear DTC from PCM memory using WDS or equivalent. • Start engine. • Is same DTC present?	Yes	Replace PCM, go to next step. (See F5–94 PCM REMOVAL/INSTALLATION)
		No	Go to next step.
9	**VERIFY AFTER REPAIR PROCEDURE** • Perform “After Repair Procedure”. (See F5–116 AFTER REPAIR PROCEDURE) • Is there any DTC present?	Yes	Go to applicable DTC inspection. (See F5–117 DTC TABLE)
		No	Troubleshooting completed.

End Of Ste

DTC P1602

AME437001083W17

DTC P1602	Immobilizer unit-PCM communication error
DETECTION CONDITION	• Command transmission from PCM to immobilizer unit exceeds limit. • No response from immobilizer unit
POSSIBLE CAUSE	• Immobilizer unit malfunction • Coil (immobilizer system) malfunction • Key (transponder) malfunction • Connector or terminal malfunction • Open circuit in wiring between immobilizer unit terminal A and PCM terminal 54 • Open circuit in wiring between immobilizer unit terminal C and body GND • Open circuit in wiring between immobilizer unit terminal D and coil terminal C • Open circuit in wiring between immobilizer unit terminal F and coil terminal A • Short to GND in wiring between immobilizer unit terminal A and PCM terminal 54 • Short to GND in wiring between immobilizer unit terminal D and coil terminal C • Short to GND in wiring between immobilizer unit terminal F and coil terminal A • PCM malfunction

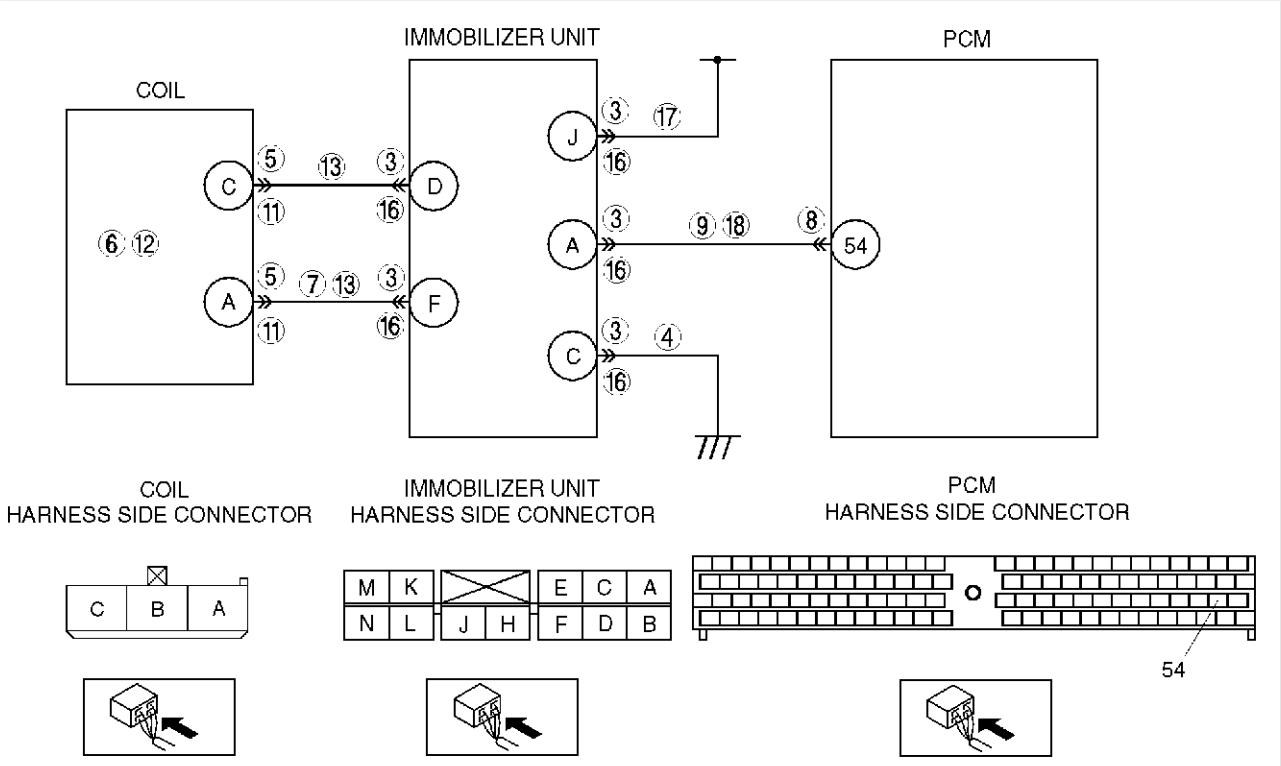

Diagnostic procedure

STEP	INSPECTION		ACTION
1	**VERIFY RELATED REPAIR INFORMATION AVAILABILITY** • Check for related Service Information availability. • Is any related repair information available?	Yes	Perform repair or diagnosis according to available Service Information. • If vehicle is not repaired, go to next step.
		No	Go to next step.
2	**VERIFY DTC P1602 DETECTED AGAIN** • Clear DTC from PCM memory using WDS or equivalent. • Start engine. • Is same DTC present?	Yes	Go to Step 10.
		No	Go to next step.
3	**INSPECT POOR CONNECTION OF IMMOBILIZER UNIT CONNECTOR** • Turn engine switch to OFF. • Inspect for poor connection (damaged, pulled-out terminals, corrosion, etc.). • Is there any malfunction?	Yes	Repair or replace suspected terminal, go to Step 19.
		No	Go to next step.

STEP	INSPECTION		ACTION
4	**INSPECT IMMOBILIZER UNIT GND CIRCUIT FOR OPEN** • Turn engine switch to OFF. • Inspect continuity between immobilizer unit terminal C and body GND. • Is there continuity?	Yes	Go to next step.
		No	Repair or replace harness for open, go to Step 19.
5	**INSPECT POOR CONNECTION OF COIL CONNECTOR** • Turn engine switch to OFF. • Inspect for poor connection (damaged, pulled-out terminals, corrosion, etc.). • Is there any malfunction?	Yes	Repair or replace suspected terminal, go to Step 19.
		No	Go to next step.
6	**INSPECT COIL FOR SHORT TO GND** • Turn engine switch to OFF. • Inspect continuity between coil terminal A and body GND. • Is there continuity?	Yes	Replace coil, go to Step 19.
		No	Go to next step.
7	**INSPECT COIL CIRCUIT FOR SHORT TO GND** • Turn engine switch to OFF. • Inspect continuity between immobilizer unit terminal F and body GND. • Is there continuity?	Yes	Repair or replace harness for short to GND, go to Step 19.
		No	Go to next step.
8	**INSPECT POOR CONNECTION OF PCM CONNECTOR** • Turn engine switch to OFF. • Inspect for poor connection (damaged, pulled-out terminals, corrosion, etc.). • Is there any malfunction?	Yes	Repair or replace suspected terminal, go to Step 19.
		No	Go to next step.
9	**INSPECT IMMOBILIZER UNIT SIGNAL CIRCUIT FOR OPEN** • Turn engine switch to OFF. • Inspect continuity between immobilizer unit terminal A and PCM terminal 54. • Is there continuity?	Yes	Go to step 19.
		No	Repair or replace harness for open, go to Step 19.
10	**CLASSIFY MALFUNCTION BY ANOTHER DETECTED DTCS** • Has DTC P1602 present?	Yes	Go to Step 14.
		No	Go to next step.
11	**INSPECT POOR CONNECTION OF COIL CONNECTOR** • Turn engine switch to OFF. • Inspect for poor connection (damaged, pulled-out terminals, corrosion, etc.). • Is there any malfunction?	Yes	Repair or replace suspected terminal, go to Step 19.
		No	Go to next step.
12	**INSPECT COIL FOR OPEN** • Turn engine switch to OFF. • Inspect continuity between coil terminals A and C. • Is there continuity?	Yes	Go to next step.
		No	Replace coil, go to Step 19.
13	**INSPECT COIL CIRCUIT FOR OPEN** • Turn engine switch to OFF. • Inspect continuity between immobilizer unit terminals D and F. • Is there continuity?	Yes	Go to Step 19.
		No	Repair or replace harness for open, go to Step 19.
14	**CLASSIFY MALFUNCTION BY OTHER DETECTED DTCS.** • Is immobilizer unit DTC 03 present?	Yes	Key does not have transponder, change to registered key. Go to Step 19.
		No	Go to next step.
15	**CLASSIFY MALFUNCTION BY OTHER DETECTED DTCS.** • Is immobilizer unit DTC 01 present?	Yes	Key is not registered. Reprogram key or use another registered key, go to next step.
		No	Go to next step.

STEP	INSPECTION		ACTION
16	**INSPECT POOR CONNECTION OF IMMOBILIZER UNIT CONNECTOR** • Turn engine switch to OFF. • Inspect for poor connection (damaged, pulled-out terminals, corrosion, etc.). • Is there any malfunction?	Yes	Repair or replace suspected terminal, go to next step.
		No	Go to next step.
17	**INSPECT IMMOBILIZER UNIT POWER CIRCUIT FOR OPEN** • Turn engine switch to OFF. • Inspect voltage between immobilizer unit terminal J and body GND. • Is voltage **B+**?	Yes	Go to next step.
		No	Repair or replace harness for open, go to Step 19.
18	**INSPECT IMMOBILIZER UNIT SIGNAL CIRCUIT FOR SHORT TO GND** • Turn engine switch to OFF. • Inspect continuity between immobilizer unit terminal A and body GND. • Is there continuity?	Yes	Repair or replace harness for short to GND, go to next step.
		No	Go to next step.
19	**VERIFY TROUBLESHOOTING OF DTC P1602 COMPLETED** • Make sure to reconnect all disconnected connectors. • Clear DTC from PCM memory using WDS or equivalent. • Start engine. • Is same DTC present?	Yes	Replace PCM, go to next step. (See F5–94 PCM REMOVAL/INSTALLATION)
		No	Go to next step.
20	**VERIFY AFTER REPAIR PROCEDURE** • Perform “After Repair Procedure”. (See F5–116 AFTER REPAIR PROCEDURE) • Is there any DTC present?	Yes	Go to applicable DTC inspection. (See F5–117 DTC TABLE)
		No	Troubleshooting completed.

End Of Sie

DTC P1603

AME437001083W18

DTC P1603	Key ID number unregistered in PCM
DETECTION CONDITION	• Key ID numbers are not registered in PCM.
POSSIBLE CAUSE	• Immobilizer system reprogram procedure (key IDs) was not performed after replacing PCM

Diagnostic procedure

STEP	INSPECTION		ACTION
1	**VERIFY RELATED REPAIR INFORMATION AVAILABILITY** • Check for related Service Information availability. • Is any repair information available?	Yes	Perform repair or diagnosis according to available Service Information. • If vehicle is not repaired, go to next step.
		No	Go to next step.
2	**VERIFY DTC P1603 DETECTED AGAIN** • Clear DTC from PCM memory using WDS or equivalent. • Start engine. • Is same DTC present?	Yes	Perform key ID number reprogram procedure.
		No	Go to next step.
3	**VERIFY TROUBLESHOOTING OF DTC P1603 COMPLETED** • Clear DTC from PCM memory using WDS or equivalent. • Start engine. • Is same DTC present?	Yes	Replace PCM, go to next step. (See F5–94 PCM REMOVAL/INSTALLATION)
		No	Go to next step.
4	**VERIFY AFTER REPAIR PROCEDURE** • Perform “After Repair Procedure”. (See F5–116 AFTER REPAIR PROCEDURE) • Is there any DTC present?	Yes	Go to applicable DTC inspection. (See F5–117 DTC TABLE)
		No	Troubleshooting completed.

End Of Sie

DTC P1604

AME437001083W19

DTC P1604	Code word unregistered in PCM
DETECTION CONDITION	• Code word is not registered in PCM.
POSSIBLE CAUSE	• Immobilizer system reprogram procedure (code word) was not performed after replacing PCM

Diagnostic procedure

STEP	INSPECTION		ACTION
1	**VERIFY RELATED REPAIR INFORMATION AVAILABILITY** • Check for related Service Information availability. • Is any repair information available?	Yes	Perform repair or diagnosis according to available Service Information. • If vehicle is not repaired, go to next step.
		No	Go to next step.
2	**VERIFY DTC P1604 DETECTED AGAIN** • Clear DTC from PCM memory using WDS or equivalent. • Start engine. • Is same DTC present?	Yes	Perform code word reprogram procedure. (See T–64 CODE WORD INPUT PROCEDURE)
		No	Go to next step.
3	**VERIFY TROUBLESHOOTING OF DTC P1604 COMPLETED** • Clear DTC from PCM memory using WDS or equivalent. • Start engine. • Is same DTC present?	Yes	Replace PCM, go to next step. (See F5–94 PCM REMOVAL/INSTALLATION)
		No	Go to next step.
4	**VERIFY AFTER REPAIR PROCEDURE** • Perform “After Repair Procedure”. (See F5–116 AFTER REPAIR PROCEDURE) • Is there any DTC present?	Yes	Go to applicable DTC inspection. (See F5–117 DTC TABLE)
		No	Troubleshooting completed.

End Of Sie

DTC P1621

AME437001083W21

DTC P1621	Code words do not match after engine cranking
DETECTION CONDITION	• Code words stored in PCM and immobilizer unit do not match.
POSSIBLE CAUSE	• Immobilizer system reprogram procedure (code word) was not performed correctly after replacing immobilizer unit or PCM

Diagnostic procedure

STEP	INSPECTION		ACTION
1	**VERIFY RELATED REPAIR INFORMATION AVAILABILITY** • Check for related Service Information availability. • Is any repair information available?	Yes	Perform repair or diagnosis according to available Service Information. • If vehicle is not repaired, go to next step.
		No	Go to next step.
2	**VERIFY DTC P1621 DETECTED AGAIN** • Clear DTC from PCM memory using WDS or equivalent. • Start engine. • Is same DTC present?	Yes	Perform code word reprogram procedure. (See T–64 CODE WORD INPUT PROCEDURE)
		No	Go to next step.
3	**VERIFY TROUBLESHOOTING OF DTC P1603 COMPLETED** • Clear DTC from PCM memory using WDS or equivalent. • Start engine. • Is same DTC present?	Yes	Replace PCM, go to next step. (See F5–94 PCM REMOVAL/INSTALLATION)
		No	Go to next step.
4	**VERIFY AFTER REPAIR PROCEDURE** • Perform “After Repair Procedure”. (See F5–116 AFTER REPAIR PROCEDURE) • Is there any DTC present?	Yes	Go to applicable DTC inspection. (See F5–117 DTC TABLE)
		No	Troubleshooting completed.

End Of Sie

DTC P1622

AME437001083W22

DTC P1622	Key ID number mismatch
DETECTION CONDITION	• ID numbers stored in immobilizer unit and PCM do not match. This DTC is indicated only after immobilizer unit is replaced and system is reprogrammed.
POSSIBLE CAUSE	• Transformation of key ID number stored in PCM

Diagnostic procedure

STEP	INSPECTION		ACTION
1	**VERIFY RELATED REPAIR INFORMATION AVAILABILITY** • Check for related Service Information availability. • Is any repair information available?	Yes	Perform repair or diagnosis according to available Service Information. • If vehicle is not repaired, go to next step.
		No	Go to next step.
2	**VERIFY DTC P1622 DETECTED AGAIN** • Clear DTC from PCM memory using WDS or equivalent. • Start engine. • Is same DTC present?	Yes	Go to next step.
		No	Go to Step 4.
3	**CHECK IF ENGINE STARTS NORMALLY USING ANOTHER REGISTERED KEY** • Does engine start with another registered key?	Yes	Previous key is defective. Discard it.
		No	Go to next step.
4	**VERIFY TROUBLESHOOTING OF DTC P1603 COMPLETED** • Clear DTC from PCM memory using WDS or equivalent. • Start engine. • Is same DTC present?	Yes	Replace PCM, go to next step. (See F5–94 PCM REMOVAL/INSTALLATION)
		No	Go to next step.
5	**VERIFY AFTER REPAIR PROCEDURE** • Perform “After Repair Procedure” (See F5–116 AFTER REPAIR PROCEDURE) • Is there any DTC present?	Yes	Go to applicable DTC inspection. (See F5–117 DTC TABLE)
		No	Troubleshooting completed.

End Of Ste

DTC P1623

AME437001083W23

DTC P1623	Code word or key ID number read/write error in PCM
DETECTION CONDITION	• PCM internal EEPROM damaged.
POSSIBLE CAUSE	• PCM internal EEPROM damaged

Diagnostic procedure

STEP	INSPECTION		ACTION
1	**VERIFY RELATED REPAIR INFORMATION AVAILABILITY** • Check for related Service Information availability. • Is any repair information available?	Yes	Perform repair or diagnosis according to available Service Information. • If vehicle is not repaired, go to next step.
		No	Go to next step.
2	**VERIFY DTC P1623 DETECTED AGAIN** • Clear DTC from PCM memory using WDS or equivalent. • Start engine. • Is same DTC present?	Yes	Replace PCM, go to next step. (See F5–94 PCM REMOVAL/INSTALLATION)
		No	Go to next step.
3	**VERIFY AFTER REPAIR PROCEDURE** • Perform “After Repair Procedure”. (See F5–116 AFTER REPAIR PROCEDURE) • Is there any DTC present?	Yes	Go to applicable DTC inspection. (See F5–117 DTC TABLE)
		No	Troubleshooting completed.

End Of Ste

DTC P1624

AME437001083W24

DTC P1624	Immobilizer system communication counter = 0
DETECTION CONDITION	• PCM detected immobilizer system communication malfunction more than three times.
POSSIBLE CAUSE	• Engine start was attempted more than three times under malfunction • Code word mismatch

Diagnostic procedure

STEP	INSPECTION		ACTION
1	**VERIFY RELATED REPAIR INFORMATION AVAILABILITY** • Check for related Service Information availability. • Is any repair information available?	Yes	Perform repair or diagnosis according to available Service Information. • If vehicle is not repaired, go to next step.
		No	Go to next step.
2	**FOLLOW OTHER DETECTED DTC FIRST** • Turn engine switch to OFF. • Start engine. • Has P1602 been detected?	Yes	Go to DTC P1602 inspection. (See F5–188 DTC P1602)
		No	Go to next step.
2	**INSPECT POOR CONNECTION OF IMMOBILIZER UNIT CONNECTOR** • Has P1621 been detected?	Yes	Go to DTC P1621 inspection. (See F5–191 DTC P1621)
		No	Go to next step.
3	**VERIFY TROUBLESHOOTING OF DTC P1624 COMPLETED** • Clear DTC from PCM memory using WDS or equivalent. • Start engine. • Is same DTC present?	Yes	Replace PCM, go to next step. (See F5–94 PCM REMOVAL/INSTALLATION)
		No	Go to next step.
4	**VERIFY AFTER REPAIR PROCEDURE** • Perform “After Repair Procedure”. (See F5–116 AFTER REPAIR PROCEDURE) • Is there any DTC present?	Yes	Go to applicable DTC inspection. (See F5–117 DTC TABLE)
		No	Troubleshooting completed.

End Of Sie

DTC P2228

DTC P2228	BARO sensor circuit low input
DETECTION CONDITION	• PCM monitors input voltage from BARO sensor while engine is running. If input voltage from BARO sensor is **below 0.7 V**, PCM determines BARO sensor circuit low input.
POSSIBLE CAUSE	• BARO sensor malfunction • PCM malfunction

Diagnostic procedure

STEP	INSPECTION		ACTION
1	**PERFORM DTC CONFIRMATION PROCEDURE** • Perform “DTC Confirmation Procedure”. (See F5–115 DTC CONFIRMATION PROCEDURE) • Is same DTC present during KOEO or KOER self-test?	Yes	Go to next step.
		No	Intermittent concern exists. Go to “Intermittent Concern Troubleshooting”. (See F5–195 INTERMITTENT CONCERN TROUBLESHOOTING)
2	**VERIFY TROUBLESHOOTING OF DTC P2228 COMPLETED** • Clear DTC from PCM memory using WDS or equivalent. • Perform KOEO/KOER self-test. (See F5–55 KOEO/KOER SELF-TEST) • Is same DTC present?	Yes	Replace PCM, go to next step. (See F5–94 PCM REMOVAL/INSTALLATION)
		No	Go to next step.
3	**VERIFY AFTER REPAIR PROCEDURE** • Perform “After Repair Procedure”. (See F5–116 AFTER REPAIR PROCEDURE) • Is there any DTC present?	Yes	Go to applicable DTC inspection. (See F5–117 DTC TABLE)
		No	Troubleshooting completed.

End Of Sie

DTC P2229

DTC P2229	BARO sensor circuit high input
DETECTION CONDITION	• PCM monitors input voltage from BARO sensor while engine is running. If input voltage from BARO sensor is **above 4.5 V**, PCM determines BARO sensor circuit high input.
POSSIBLE CAUSE	• BARO sensor malfunction • PCM malfunction

Diagnostic procedure

STEP	INSPECTION		ACTION
1	**PERFORM DTC CONFIRMATION PROCEDURE** • Perform “DTC Confirmation Procedure”. (See F5–115 DTC CONFIRMATION PROCEDURE) • Is same DTC present during KOEO or KOER self-test?	Yes	Go to next step.
		No	Intermittent concern exists. Go to “Intermittent Concern Troubleshooting”. (See F5–195 INTERMITTENT CONCERN TROUBLESHOOTING)
2	**VERIFY TROUBLESHOOTING OF DTC P2229 COMPLETED** • Clear DTC from PCM memory using WDS or equivalent. • Perform KOEO/KOER self-test. (See F5–55 KOEO/KOER SELF-TEST) • Is same DTC present?	Yes	Replace PCM, go to next step. (See F5–94 PCM REMOVAL/INSTALLATION)
		No	Go to next step.
3	**VERIFY AFTER REPAIR PROCEDURE** • Perform “After Repair Procedure”. (See F5–116 AFTER REPAIR PROCEDURE) • Is there any DTC present?	Yes	Go to applicable DTC inspection. (See F5–117 DTC TABLE)
		No	Troubleshooting completed.

End Of Se

TROUBLESHOOTING

INTERMITTENT CONCERN TROUBLESHOOTING

AME438018881W35

Vibration Method

1. If a malfunction occurs or becomes worse while driving on a rough road, or due to engine vibration, perform the steps below.

Note

- There are several reasons vehicle or engine vibration could cause an electrical malfunction. Some of the things to check for are:
  - — Connectors not fully seated.
  - — Wire harnesses not having full play.
  - — Wires laying across brackets or moving parts.
  - — Wires routed too close to hot parts.
- An improperly routed, improperly clamped, or loose harness can cause wiring to become pinched between parts.
- The connector joints, points of vibration, and places where wire harnesses pass through the fire wall, body panels, etc. are the major areas to be checked.

Inspection Method for Switch Connectors or Wires

1. Connect the WDS or equivalent to the DLC-2.
2. Turn the engine switch to ON (Engine OFF).

Note

- If engine starts and runs, perform the following steps at idle.

3. Access PIDs for the switch you are inspecting.
4. Turn switch on manually.
5. Shake each connector or wire harness a bit vertically and horizontally while monitoring the PID.
   - If the PID value is unstable, check for poor connection.

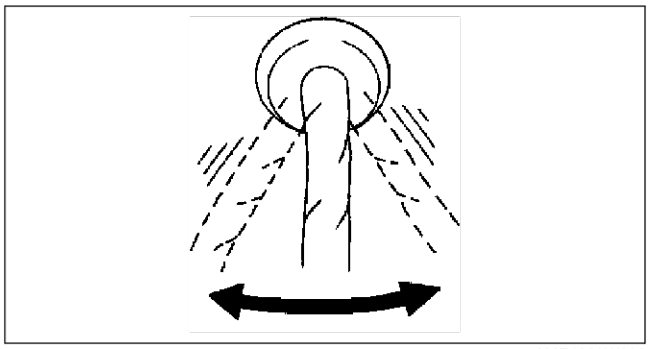

AME4380W008

Inspection Method for Sensor Connectors or Wires

1. Connect the WDS or equivalent to the DLC-2.
2. Turn the engine switch to ON (Engine OFF).

Note
- If engine starts and runs, perform the following steps at idle.

3. Access PIDs for the switch you are inspecting.
4. Shake each connector or wire harness a bit vertically and horizontally while monitoring the PID.
   - If the PID value is unstable, check for poor connection.

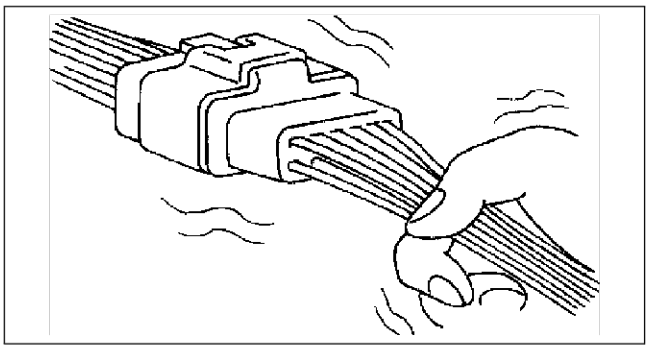

AME4380W009

Inspection Method for Sensors

1. Connect the WDS or equivalent to the DLC-2.
2. Turn the engine switch to ON (Engine OFF).

Note
- If the engine starts and runs, perform the following steps at idle.

3. Access PIDs for the switch you are inspecting.
4. Vibrate the sensor slightly with your finger.
   - If the PID value is unstable or malfunction occurs, check for poor connection and/or poorly mounted sensor.

Inspection Method for Actuators or Relays

1. Connect the WDS or equivalent to the DLC-2.
2. Turn the engine switch to ON (Engine OFF).

Note
- If the engine starts and runs, perform the following steps at idle.

3. Prepare the Output State Control for actuators or relays that you are inspecting.
4. Vibrate the actuator or relay with your finger for **3 seconds** after Output State Control is activated.
   - If a variable click sound is heard, check for poor connection and/or poorly mounted actuator or relay.

Note
- Vibrating relays too strongly may result in open relays.

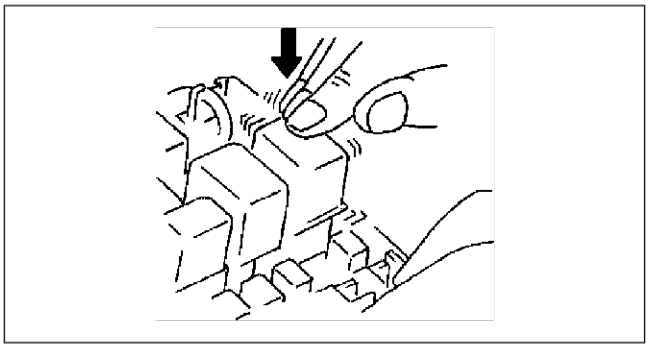

AME4380W010

Water Sprinkling Method

Caution
- **Indirectly change the temperature and humidity by spraying water onto the front of the radiator.**
- **If a vehicle is subject to water leakage, the leakage may damage the control module. When testing a vehicle with a water leakage problem, special caution must be used.**

If malfunction occurs only during high humidity or rainy/snowy weather, perform the following steps.
1. Connect the WDS or equivalent to the DLC-2 if you are inspecting sensors or switches.
2. Turn the engine switch to ON (Engine OFF).

Note
- If the engine starts and runs, perform the following steps at idle.

3. Access PIDs for sensor or switch if you are inspecting sensors or switches.
4. If you are inspecting a switch, turn it on manually.
5. Spray water onto the vehicle or run it through a car wash.
   - If the PID value is unstable or malfunction occurs, repair or replace part as necessary.

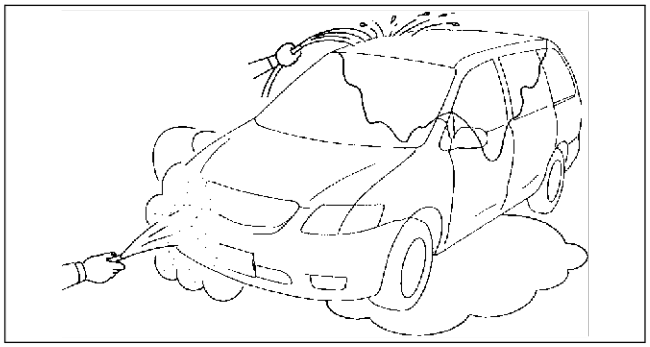

AME4380W011

End Of Sie

SYMPTOM DIAGNOSTIC INDEX

AME438018881W02

No.	TROUBLESHOOTING ITEM		DESCRIPTION	PAGE
1	Melting of main or other fuses		—	(See F5–204 NO.1 MELTING OF MAIN OR OTHER FUSES)
2	MIL illuminates		MIL is illuminated incorrectly.	(See F5–205 NO.2 MIL ILLUMINATES)
3	Will not crank		Starter does not work.	(See F5–205 NO.3 WILL NOT CRANK)
4	Hard start/long crank/erratic start/ erratic crank		Starter cranks engine at normal speed but engine requires excessive cranking time before starting.	(See F5–206 NO.4 HARD START/LONG CRANK/ ERRATIC START/ERRATIC CRANK)
5	Engine stalls	After start/at idle	Engine stops unexpectedly at idle and/or after start.	(See F5–208 NO.5 ENGINE STALLS-AFTER START/AT IDLE)
6	Cranks normally but will not start		Starter cranks engine at normal speed but engine will not run.	(See F5–211 NO.6 CRANKS NORMALLY BUT WILL NOT START)
7	Slow return to idle		Engine takes more time than normal to return to idle speed.	(See F5–214 NO.7 SLOW RETURN TO IDLE)
8	Engine runs rough/rolling idle		Engine speed fluctuates between specified idle speed and lower speed and engine shakes excessively.	(See F5–216 NO.8 ENGINE RUNS ROUGH/ROLLING IDLE)
9	Fast idle/runs on		Engine speed continues at fast idle after warm-up. Engine runs after engine switch is turned to OFF.	(See F5–219 NO.9 FAST IDLE/RUNS ON)
10	Low idle/stalls during deceleration		Engine stops unexpectedly at beginning of deceleration or recovery from deceleration.	(See F5–220 NO.10 LOW IDLE/STALLS DURING DECELERATION)

No.	TROUBLESHOOTING ITEM		DESCRIPTION	PAGE
11	Engine stalls/quits	Acceleration/ cruise	Engine stops unexpectedly at beginning of acceleration or during acceleration. Engine stops unexpectedly while cruising.	(See F5–222 NO.11 ENGINE STALLS/QUITS, ENGINE RUNS ROUGH, MISSES, BUCK/JERK, HESITATION/ STUMBLE, SURGES)
	Engine runs rough	Acceleration/ cruise	Engine speed fluctuates during acceleration or cruising.	
	Misses	Acceleration/ cruise	Engine misses during acceleration or cruising.	
	Buck/jerk	Acceleration/ cruise/ deceleration	Vehicle bucks/jerks during acceleration, cruising, or deceleration.	
	Hesitation/stumble	Acceleration	Momentary pause at beginning of acceleration or during acceleration.	
	Surges	Acceleration/ cruise	Momentary minor irregularity in engine output.	
12	Lack/loss of power	Acceleration/ cruise	Performance is poor under load (e.g. power down when climbing hills).	(See F5–225 NO.12 LACK/ LOSS OF POWER-ACCELERATION/CRUISE)
13	Knocking/pinging		Excessive shrilly knocking sound from engine.	(See F5–228 NO.13 KNOCKING/PINGING)
14	Poor fuel economy		Fuel economy is unsatisfactory.	(See F5–231 NO.14 POOR FUEL ECONOMY)
15	Emissions compliance		Fails emissions test.	(See F5–234 NO.15 EMISSION COMPLIANCE)
16	High oil consumption/leakage		Oil consumption is excessive.	(See F5–237 NO.16 HIGH OIL CONSUMPTION/LEAKAGE)
17	Cooling system concerns	Overheating	Engine runs at higher than normal temperature/overheats.	(See F5–238 NO.17 COOLING SYSTEM CONCERNS-OVERHEATING)
18	Cooling system concerns	Runs cold	Engine does not reach normal operating temperature.	(See F5–240 NO.18 COOLING SYSTEM CONCERNS-RUNS COLD)
19	Excessive black smoke		Excessive black smoke is observed in exhaust gas.	(See F5–241 NO.19 EXCESSIVE BLACK SMOKE)
20	Fuel odor (in engine compartment)		Fuel smell or visible leakage.	(See F5–243 NO.20 FUEL ODOR (IN ENGINE COMPARTMENT)
21	Engine noise		Engine noise from under hood.	(See F5–244 NO.21 ENGINE NOISE)
22	Vibration concerns (engine)		Vibration from under hood or driveline.	(See F5–246 NO.22 VIBRATION CONCERNS (ENGINE)
23	A/C does not work sufficiently		A/C compressor magnetic clutch does not engage when A/C is turned on.	(See F5–248 NO.23 A/C DOES NOT WORK SUFFICIENTLY)
24	A/C always on or A/C compressor runs continuously		A/C compressor magnetic clutch does not disengage.	(See F5–249 NO.24 A/C ALWAYS ON OR A/C COMPRESSOR RUNS CONTINUOUSLY)
25	A/C does not cut off under wide open throttle conditions		A/C compressor magnetic clutch does not disengage under wide open throttle.	(See F5–250 NO.25 A/C DOES NOT CUT OFF UNDER WIDE OPEN THROTTLE CONDITIONS)
26	Constant voltage		Incorrect Constant voltage.	(See F5–251 NO.26 CONSTANT VOLTAGE)

End Of Sie

SYMPTOM QUICK DIAGNOSIS CHART

AME438018881W03

× : Applicable

	Troubleshooting item / Possible factor		Starter motor malfunction (Mechanical or electrical)	Starter circuit including engine switch is open.	Improper engine oil level	Low or dead battery	Charging system malfunction	Improper engine compression	Improper valve timing	Hydrolocked engine	Improper engine oil viscosity	Improper dipstick	Base engine malfunction	Seized flywheel	Improper tension or damaged drivebelts	Improper engine coolant level	Water and anti-freeze mixture is improper.	Cooling system malfunction (Radiator, hose, over-flow system, thermostat, etc.)
1	Melting of main or other fuses																	
2	MIL illuminates																	
3	Will not crank		×	×		×	×			×				×				
4	Hard to start/long crank/erratic start/erratic crank		×	×				×										
5	Engine stalls	After start/at idle						×	×									
6	Cranks normally but will not start							×	×									
7	Slow return to idle																	×
8	Engine runs rough/rolling idle							×	×									
9	Fast idle/runs on																	
10	Low idle/stalls during deceleration							×	×									
11	Engine stalls/quits	Acceleration/cruise						×	×									
	Engine runs rough	Acceleration/cruise						×	×									
	Misses	Acceleration/cruise						×	×									
	Buck/jerk	Acceleration/cruise/ deceleration						×	×									
	Hesitation/stumble	Acceleration						×	×									
	Surges	Acceleration/cruise						×	×									
12	Lack/loss of power	Acceleration/cruise						×	×									
13	Knocking pinging							×	×									×
14	Poor fuel economy							×	×									×
15	Emission compliance							×	×				×					×
16	High oil consumption/leakage				×						×	×	×					
17	Cooling system concerns	Overheating													×	×	×	×
18	Cooling system concerns	Runs cold																×
19	Excessive black smoke							×	×				×					
20	Fuel odor (in engine compartment)																	
21	Engine noise												×		×			
22	Vibration concerns (engine)														×			
23	A/C does not work sufficiency																	
24	A/C always on or A/C compressor runs continuously																	
25	A/C does not cut off under WOT conditions																	
26	Constant voltage																	

AME4380W001

F5

× : Applicable

	Troubleshooting item / Possible factor		Main fan system malfunction	Engine or transaxle mounts are improperly installed.	Cooling fan or condenser fan seat are improper.	Fuel quality	Engine over heating	Air cleaner element clogg or restriction	Air leakage from intake air system	VSC system malfunction	Vacuum leakage	Turbocharger malfunction	Charge air cooler malfunction	VBC system malfunction	Glow system malfunction	Incorrect fuel injection timing	Incorrect idle speed	CKP sensor is damaged. (e.g.: open or short circuits)	CKP sensor pulse wheel is damaged.
1	Melting of main or other fuses																		
2	MIL illuminates													×	×			×	
3	Will not crank																		
4	Hard to start/long crank/erratic start/erratic crank					×	×	×							×	×		×	×
5	Engine stalls	After start/at idle			×	×	×	×							×	×		×	×
6	Cranks normally but will not start					×		×							×	×		×	×
7	Slow return to idle															×	×	×	×
8	Engine runs rough/rolling idle					×	×	×	×							×	×	×	×
9	Fast idle/runs on										×								
10	Low idle/stalls during deceleration					×		×							×	×	×	×	×
11	Engine stalls/quits	Acceleration/cruise			×		×	×		×		×				×		×	×
	Engine runs rough	Acceleration/cruise			×	×	×	×		×		×			×	×	×	×	×
	Misses	Acceleration/cruise			×	×	×	×	×	×		×			×	×	×	×	×
	Buck/jerk	Acceleration/cruise/ deceleration			×	×	×	×	×	×		×			×	×	×	×	×
	Hesitation/stumble	Acceleration			×	×	×	×	×	×		×			×	×	×	×	×
	Surges	Acceleration/cruise			×	×	×	×	×	×		×			×	×		×	×
12	Lack/loss of power	Acceleration/cruise			×	×	×	×	×	×	×	×	×	×		×	×	×	×
13	Knocking pinging					×		×	×	×		×	×	×	×	×		×	×
14	Poor fuel economy					×		×			×	×	×	×		×	×	×	×
15	Emission compliance					×	×	×	×	×	×	×	×	×	×	×	×	×	×
16	High oil consumption/leakage											×							
17	Cooling system concerns	Overheating	×																
18	Cooling system concerns	Runs cold	×																
19	Excessive black smoke							×	×	×	×	×	×	×		×		×	×
20	Fuel odor (in engine compartment)																		
21	Engine noise								×		×					×		×	×
22	Vibration concerns (engine)			×	×						×								
23	A/C does not work sufficiency																		
24	A/C always on or A/C compressor runs continuously																		
25	A/C does not cut off under WOT conditions																		
26	Constant voltage																		

AME4380W002

× : Applicable

	Troubleshooting item \ Possible factor		Improper gap between CKP sensor and pulse wheel	Fuel supply pump malfunction	Suction control valve malfunction	Fuel pressure limiter malfunction	Fuel line restriction or clogging	Fuel injectors malfunction (Leakage or clogging, inoperative)	Fuel leakage from fuel system (including insulator, fuel injector,)	Fuel filter restriction or clogging	CMP sensor is damaged. (e.g.: open or short circuit)	CMP sensor pulse wheel is damaged.	IDM or related circuit malfunction	Exhaust system restriction or clogging	Catalyst converter malfunction	EGR system malfunction	EGR water cooler malfunction
1	Melting of main or other fuses																
2	MIL illuminates				×			×			×						
3	Will not crank																
4	Hard to start/long crank/erratic start/erratic crank		×	×	×	×	×	×	×	×	×	×	×	×		×	
5	Engine stalls	After start/at idle	×	×	×	×	×	×	×	×	×	×	×	×		×	
6	Cranks normally but will not start		×	×	×	×	×	×	×	×	×	×	×			×	
7	Slow return to idle		×	×	×	×		×			×	×	×				
8	Engine runs rough/rolling idle		×	×	×	×	×	×	×	×	×	×	×			×	×
9	Fast idle/runs on				×			×					×				
10	Low idle/stalls during deceleration		×	×	×	×	×	×	×	×	×	×	×			×	
11	Engine stalls/quits	Acceleration/cruise	×	×	×	×	×	×		×	×	×	×	×		×	
	Engine runs rough	Acceleration/cruise	×	×	×	×	×	×		×	×	×	×	×		×	
	Misses	Acceleration/cruise	×	×	×	×	×	×		×	×	×	×	×		×	
	Buck/jerk	Acceleration/cruise/ deceleration	×	×	×	×	×	×		×	×	×	×	×		×	
	Hesitation/stumble	Acceleration	×	×	×	×	×	×		×	×	×	×	×		×	
	Surges	Acceleration/cruise	×	×	×	×	×	×		×	×	×	×	×		×	
12	Lack/loss of power	Acceleration/cruise	×	×	×	×	×	×		×	×	×	×	×		×	
13	Knocking pinging		×		×		×				×	×		×		×	
14	Poor fuel economy		×	×			×	×	×	×	×	×		×		×	
15	Emission compliance		×	×	×	×	×	×			×	×	×	×	×	×	×
16	High oil consumption/leakage																
17	Cooling system concerns	Overheating														×	
18	Cooling system concerns	Runs cold															
19	Excessive black smoke		×		×	×	×	×					×	×		×	
20	Fuel odor (in engine compartment)				×	×			×								
21	Engine noise		×		×			×			×	×				×	
22	Vibration concerns (engine)							×			×	×					
23	A/C does not work sufficiency																
24	A/C always on or A/C compressor runs continuously																
25	A/C does not cut off under WOT conditions																
26	Constant voltage																

AME4380W003

F5

× : Applicable

Troubleshooting item / Possible factor			V-reference voltage supply circuit malfunction	PCM control relay malfunction	ECT sensor or related circuit malfunction	Neutral switch and related circuit malfunction	MAF/IAT sensor or related circuit malfunction	IAT sensor No.2 or related circuit malfunction	Boost sensor or related circuit malfunction	Accelerator position sensor or related circuit malfunction	Accelerator position sensor misadjustment (including looseness)	Idle switch or related circuit malfunction	Idle switch misadjustment (including looseness)	Fuel pressure sensor or related circuit malfunction	Improper refrigerant charging amount	A/C relay (A/C control signal) circuit malfunction	A/C magnetic clutch or related circuit malfunction	Additional fan system malfunction
1	Melting of main or other fuses																	
2	MIL illuminates				×	×	×	×	×	×	×	×	×	×				
3	Will not crank																	
4	Hard to start/long crank/erratic start/erratic crank				×		×			×	×			×				
5	Engine stalls	After start/at idle	×	×	×		×			×	×			×	×	×	×	
6	Cranks normally but will not start		×	×	×									×				
7	Slow return to idle				×	×	×			×	×	×	×	×				
8	Engine runs rough/rolling idle				×	×	×			×	×	×	×	×	×	×	×	×
9	Fast idle/runs on				×						×		×					
10	Low idle/stalls during deceleration				×	×	×			×	×	×	×	×	×	×	×	
11	Engine stalls/quits	Acceleration/cruise			×		×			×	×	×	×	×	×	×	×	
	Engine runs rough	Acceleration/cruise			×	×	×			×	×	×	×	×	×	×	×	
	Misses	Acceleration/cruise			×		×			×	×	×	×	×	×	×	×	
	Buck/jerk	Acceleration/cruise/ deceleration			×		×	×	×	×	×	×	×	×	×	×	×	
	Hesitation/stumble	Acceleration			×		×	×	×	×	×	×	×	×	×	×	×	
	Surges	Acceleration/cruise			×		×	×	×	×	×	×	×	×	×	×	×	
12	Lack/loss of power	Acceleration/cruise			×		×	×	×	×	×	×	×	×	×	×	×	
13	Knocking pinging				×		×	×	×	×				×				
14	Poor fuel economy				×		×	×	×	×			×	×	×	×	×	
15	Emission compliance				×	×	×	×	×	×	×	×	×	×				
16	High oil consumption/leakage																	
17	Cooling system concerns	Overheating													×	×	×	×
18	Cooling system concerns	Runs cold																×
19	Excessive black smoke							×	×					×				
20	Fuel odor (in engine compartment)													×				
21	Engine noise				×		×	×	×	×				×				
22	Vibration concerns (engine)				×		×			×	×	×	×					
23	A/C does not work sufficiency														×	×	×	
24	A/C always on or A/C compressor runs continuously															×	×	
25	A/C does not cut off under WOT conditions									×	×							
26	Constant voltage		×		×		×	×	×	×				×				

AME4380W004

× : Applicable

Troubleshooting item / Possible factor			Clutch slippage	Air in power steering fluid line	VSS and related circuit malfunction	Brake dragging	Loose parts	Improper balance of wheels or tires	Deiveline malfunction	Suspension malfunction	Immobilizer system and/or circuit malfunction	Coolant heater system malfunction	A/C magnetic clutch or related circuit malfunction
1	Melting of main or other fuses												
2	MIL illuminates												
3	Will not crank												
4	Hard to start/long crank/erratic start/erratic crank										×		
5	Engine stalls	After start/at idle									×		×
6	Cranks normally but will not start										×		
7	Slow return to idle												
8	Engine runs rough/rolling idle												×
9	Fast idle/runs on												
10	Low idle/stalls during deceleration												×
11	Engine stalls/quits	Acceleration/cruise	×		×								×
	Engine runs rough	Acceleration/cruise	×		×								×
	Misses	Acceleration/cruise	×		×								×
	Buck/jerk	Acceleration/cruise/ deceleration	×		×								×
	Hesitation/stumble	Acceleration	×		×								×
	Surges	Acceleration/cruise	×		×								×
12	Lack/loss of power	Acceleration/cruise	×			×							×
13	Knocking pinging												
14	Poor fuel economy		×		×	×						×	×
15	Emission compliance				×								
16	High oil consumption/leakage												
17	Cooling system concerns	Overheating										×	×
18	Cooling system concerns	Runs cold										×	
19	Excessive black smoke												
20	Fuel odor (in engine compartment)												×
21	Engine noise			×			×						
22	Vibration concerns (engine)							×	×	×			×
23	A/C does not work sufficiency												
24	A/C always on or A/C compressor runs continuously												
25	A/C does not cut off under WOT conditions												
26	Constant voltage												

AME4380W005

End Of Ste

NO.1 MELTING OF MAIN OR OTHER FUSES

AME438018881W04

1	Melting of main or other fuses

[TROUBLESHOOTING HINTS]
Inspect condition of fuse.

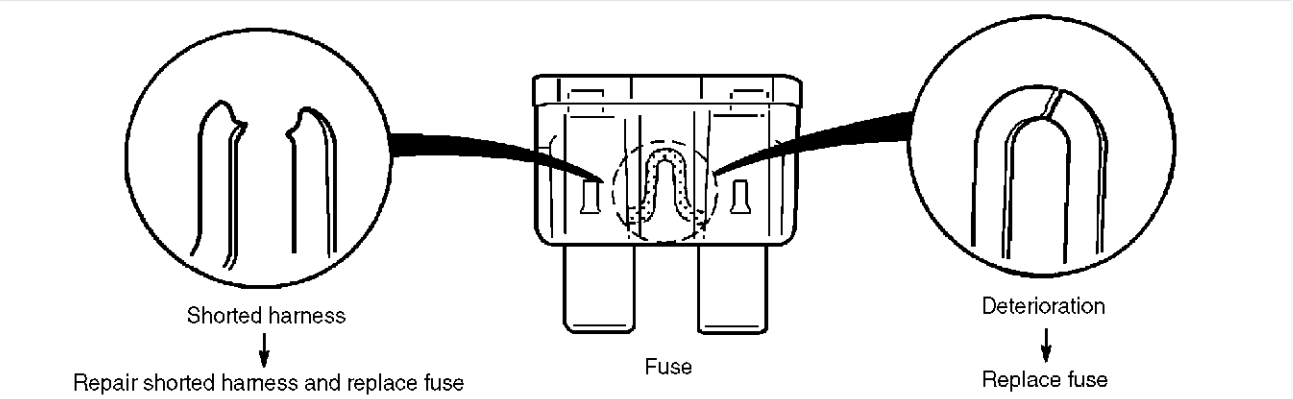

Damaged fuse	Related wiring harness
MAIN	**MAIN fuse** • BTN fuse • FAN fuse • IG KEY 2 fuse • GLOW fuse
IG KEY 1	**IG KEY 1 fuse** • Engine switch — ENGINE fuse
FUEL	**FUEL fuse** • Fuel warmer
BTN	**BTN fuse** • ROOM fuse
IG KEY 2	**IG KEY 2 fuse** • Engine switch
ROOM	**ROOM fuse** • Immobilizer unit • DLC-2
ENGINE	**ENGINE fuse** • PCM
INJ	**INJ fuse** • PCM control relay — PCM — MAF/IAT sensor — IDM — VSC solenoid valve — VBC solenoid valve — EGR control solenoid valve — EGR solenoid valve (vacuum) — EGR solenoid valve (vent) — Intake shutter solenoid valve (half) — Intake shutter solenoid valve (full) • EEC fuse
GLOW	**GLOW fuse** • Glow plug relay — Glow plug — PCM
EEC	**EEC fuse** • PCM
FAN	**FAN fuse** • Main fan relay — Fan control module

End Of Sie

NO.2 MIL ILLUMINATES

AME438018881W05

2	MIL ILLUMINATES
DESCRIPTION	• MIL illuminates incorrectly.
POSSIBLE CAUSE	• PCM illuminates for emission-related concern (DTC is stored in PCM) • Instrument cluster malfunction **Note** • If MIL blinks at steady rate, misfire condition could possibly exist.

Diagnostic procedure

STEP	INSPECTION	RESULTS	ACTION
1	Connect WDS or equivalent to DLC-2. Turn engine switch to ON. Retrieve any DTC. Is DTC displayed?	Yes	**DTC is displayed:** • Go to appropriate DTC test.
		No	**No DTC is displayed:** • Inspect instrument cluster operation.
2	Verify test results. • If okay, return to diagnostic index to service any additional symptoms. • If malfunction remains, replace PCM. (See F5–94 PCM REMOVAL/INSTALLATION)		

End Of Ste

NO.3 WILL NOT CRANK

AME438018881W06

3	WILL NOT CRANK
DESCRIPTION	• Starter does not work.
POSSIBLE CAUSE	• Open starter circuit between engine switch and starter • Starter malfunction • Seized/hydrolocked engine, flywheel

F5

Diagnostic procedure

STEP	INSPECTION	RESULTS	ACTION
1	Inspect followings: • Battery connection • Battery condition • Fuses Are all items okay?	Yes	Go to next step.
		No	Service as necessary. Repeat Step 1.
2	Is clicking sound heard from starter when engine switch is turned to START?	Yes	Go to Step 4.
		No	Go to next step.
3	Inspect starting system. Is starting system okay?	Yes	Inspect for seized/hydrolocked engine, flywheel.
		No	Repair or replace components as required.
4	Do any other electrical accessories work?	Yes	Go to next step.
		No	Inspect charging system.
5	Connect WDS or equivalent to DLC-2. Turn engine switch to ON. Retrieve any DTC. Is DTC displayed?	Yes	**DTC is displayed:** Go to appropriate DTC test. **Communication error message is displayed:** Inspect for following: • Open circuit between PCM control relay and PCM terminal 53 or 79 • Open circuit PCM control relay and PCM terminal 69 • PCM control relay stuck open • Open or poor GND circuit (PCM terminal 65, 85, 103 or 104) • Poor connection vehicle body GND
		No	**No DTC is displayed:** Inspect for following: • START circuit in engine switch • Open circuit between engine switch and starter
6	Verify test results. • If okay, return to diagnostic index to service any additional symptoms. • If malfunction remains, replace PCM. (See F5–94 PCM REMOVAL/INSTALLATION)		

End Of Ste

NO.4 HARD START/LONG CRANK/ERRATIC START/ERRATIC CRANK

AME438018881W07

4	HARD START/LONG CRANK/ERRATIC START/ERRATIC CRANK
DESCRIPTION	• Starter cranks engine at normal speed but engine requires excessive cranking time before starting. • Battery is in normal condition.
POSSIBLE CAUSE	• Poor fuel quality • Intake-air system restriction • Starting system malfunction • Inadequate fuel pressure • Fuel pressure limiter malfunction (built-in common rail) • Suction control valve malfunction (built-in supply pump) • Engine overheating • Glow system malfunction • Fuel filter clogging • Fuel line restriction • Fuel leakage • Exhaust system and/or catalyst converter restriction • Incorrect fuel injection timing • Erratic signal from CKP sensor • Erratic signal from CMP sensor • ECT sensor or related circuit malfunction • Accelerator position sensor or related circuit malfunction • MAF/IAT sensor or related circuit malfunction • Fuel pressure sensor or related circuit malfunction • Supply pump malfunction • Fuel injector malfunction • Low engine compression • Improper valve timing • IDM or related circuit malfunction • EGR system malfunction • Vacuum leakage **Warning** **The following troubleshooting flow chart contains the fuel system diagnosis and repair procedures. Read the following warnings before performing the fuel system services:** • **Fuel vapor is hazardous. It can easily ignite, causing serious injury and damage. Always keep sparks and flames away from fuel.** • **Fuel line spills and leakage are dangerous. Fuel can ignite and cause serious injury or death and damage. Fuel can also irritate skin and eyes. To prevent this, always complete "BEFORE REPAIR PROCEDURE" and "AFTER REPAIR PROCEDURE" described in this manual.**

Diagnostic Procedure

STEP	INSPECTION	RESULTS	ACTION
1	Inspect for following: • Fuel quality (e.g.: include water contamination, winter/summer blend) • Fuel line/fuel filter clogging • Intake-air system restriction Are all items okay?	Yes	Go to next step.
		No	Service as necessary. Repeat Step 1.
2	Is engine overheating?	Yes	Go to symptom troubleshooting "NO.17 COOLING SYSTEM CONCERNS-OVERHEATING".
		No	Go to next step.
3	Connect WDS or equivalent to DLC-2. Turn engine switch to ON. Retrieve any DTC. Is DTC displayed?	Yes	**DTC is displayed:** Go to appropriate DTC test. **Communication error message is displayed:** Inspect followings: • Open circuit between PCM control relay and PCM terminal 53 or 79 • Open circuit PCM control relay and PCM terminal 69 • PCM control relay stuck open • Open or poor GND circuit (PCM terminal 65, 85, 103 or 104) • Poor connection vehicle body GND
		No	**No DTC is displayed:** Go to next step.

STEP	INSPECTION	RESULTS	ACTION
4	Does engine start normally after warm-up?	Yes	Inspect glow system operation. (See T–28 RELAY INSPECTION) Replace any malfunctioning part as necessary. If glow system is okay, go to next step.
		No	Go to next step.
5	Is there any restriction in exhaust system or catalyst converter?	Yes	Repair or replace as necessary.
		No	Go to next step.
6	Inspect for fuel leakage from fuel pipe. Is any fuel leakage found on fuel pipe?	Yes	Repair or replace as necessary.
		No	Go to next step.
7	Visually inspect CKP sensor and teeth of pulse wheel. Are CKP sensor and teeth of pulse wheel okay?	Yes	Go to next step.
		No	Replace malfunctioning parts.
8	Measure gap between CKP sensor and teeth of pulse wheel. **Specification** **1.5—2.5 mm {0.059—0.098 in}** Is gap within specification?	Yes	Go to next step.
		No	Adjust CKP sensor position.
9	Visually inspect CMP sensor and teeth of pulse wheel. Are CMP sensor and teeth of pulse wheel okay?	Yes	Inspect following PIDs: (See F5–95 PCM INSPECTION) • ECT • IAT • MAF • RPM If PID value is not as specified, repair or replace malfunctioning parts. If PID value is okay, go to next step.
		No	Replace malfunctioning parts.
10	Inspect fuel pressure sensor. (See F5–109 FUEL PRESSURE SENSOR INSPECTION) Is fuel pressure okay?	Yes	Go to next step.
		No	Replace common rail.
11	Inspect suction control valve. (See F5–83 SUCTION CONTROL VALVE INSPECTION) Is suction control valve okay?	Yes	Go to next step.
		No	Repair supply pump. (See F5–82 SUPPLY PUMP INSPECTION)
12	Is engine compression correct? (See B4–16 COMPRESSION INSPECTION)	Yes	Go to next step.
		No	Inspect for following: • Damaged valve seat • Worn valve stem and valve guide • Worn or stuck piston ring • Worn piston, piston ring or cylinder • Improper valve timing Service as necessary.
13	Inspect fuel injector. (See F5–85 FUEL INJECTOR INSPECTION) Is fuel injector okay?	Yes	Go to next step.
		No	Repair or replace as necessary.
14	Inspect EGR system operation. Is EGR system operation normal?	Yes	Go to next step.
		No	Repair or replace malfunctioning part according to EGR system operation results.
15	Inspect starting system. Is starting system normal?	Yes	Inspect for loose connectors or poor terminal contact. If okay, remove and inspect supply pump and common rail.
		No	Repair or replace components as required.
16	Verify test results. • If okay, return to diagnostic index to service any additional symptoms. • If malfunction remains, replace PCM. (See F5–94 PCM REMOVAL/INSTALLATION)		

End Of Sta

NO.5 ENGINE STALLS-AFTER START/AT IDLE

AME438018881W08

5	ENGINE STALLS-AFTER START/AT IDLE
DESCRIPTION	• Engine stops unexpectedly.
POSSIBLE CAUSE	• Poor fuel quality • Intake-air system restriction • Air leakage from intake-air system • Engine overheating • A/C system improper operation • Immobilizer system and/or circuit malfunction • PCM control relay malfunction • Glow system malfunction • Inadequate fuel pressure • Fuel pressure sensor related circuit malfunction • Suction control valve malfunction (built-in supply pump) • Fuel pressure limiter malfunction (built-in common rail) • Fuel leakage • Fuel line restriction • Fuel filter clogging • Incorrect fuel injection timing • Erratic signal from CKP sensor • Erratic signal from CMP sensor • Supply pump malfunction • Fuel injector malfunction • Low engine compression • Improper valve timing • Exhaust system and/or catalyst converter restriction or clogging • EGR system malfunction • ECT sensor or related circuit malfunction • Accelerator positions sensor or related circuit malfunction • MAF/IAT sensor or related circuit malfunction • V-reference voltage supply circuit malfunction • IDM or related circuit malfunction **Warning** **The following troubleshooting flow chart contains the fuel system diagnosis and repair procedures. Read the following warnings before performing the fuel system services:** • **Fuel vapor is hazardous. It can easily ignite, causing serious injury and damage. Always keep sparks and flames away from fuel.** • **Fuel line spills and leakage are dangerous. Fuel can ignite and cause serious injury or death and damage. Fuel can also irritate skin and eyes. To prevent this, always complete "BEFORE REPAIR PROCEDURE" and "AFTER REPAIR PROCEDURE" described in this manual.**

Diagnostic Procedure

STEP	INSPECTION	RESULTS	ACTION
1	**Note** • The following test should be performed on vehicles with immobilizer system. Go to Step 12 for vehicles without immobilizer system. Connect WDS or equivalent to DLC-2. Do following conditions appear? • Engine is not completely started. • DTC P1624 is displayed.	Yes	**Both conditions appear:** Go to Step 4.
		No	**Either condition or some other condition appears:** Go to next step.
2	Does engine stall **approx. 2 s** after engine is started?	Yes	Go to next step.
		No	Immobilizer system is okay. Go to Step 12.
3	Is immobilizer unit connector securely connected to immobilizer unit?	Yes	Go to next step.
		No	Connect immobilizer unit connector securely. Return to Step 2.
4	Does security light flash and indicate any of following immobilizer system DTCs? **DTC** **02, 03, 11, 21**	Yes	Go to "ON-BOARD DIAGNOSTIC FUNCTION" of immobilizer system.
		No	Go to next step.

STEP	INSPECTION	RESULTS	ACTION
5	Does security light illuminate?	Yes	Go to Step 8.
		No	Go to next step.
6	Does security light flash and indicate either of following immobilizer system DTCs **more than 135 s** after engine switch is turned to ON? **DTC** **24, 30**	Yes	Go to "ON-BOARD DIAGNOSTIC FUNCTION" of immobilizer system.
		No	Go to next step.
7	Turn engine switch to OFF. Disconnect immobilizer unit connector. Connect jumper wire between immobilizer unit connector terminal M and GND. Turn engine switch to ON. Does security light illumnate?	Yes	Reconnect immobilizer unit connector. Go to next step.
		No	Inspect for open circuit between immobilizer unit connector terminal M and instrument cluster. If okay, inspect security light bulb. Repair or replace if necessary. Reconnect immobilizer unit connector, then return to Step 4.
8	Connect WDS or equivalent to DLC-2 and retrieve DTC. Is any following DTCs displayed? **DTC** **P1602, P1603, P1604, P1621, P1622, P1624**	Yes	Go to appropriate DTC test.
		No	Go to next step.
9	Disconnect accelerator position sensor connector. Inspect continuity beween GND terminal at accelerator position sensor vehicle harness connector and body GND. Is there continuity?	Yes	Go to next step.
		No	Access PCM connector. Inspect for continuity between PCM connector 65 and 85 terminals and body GND. Repair or replace as necessary.
10	Turn engine switch to ON. Access VPWR PID. Is VPWR PID okay? **VPWR PID** **Battery positive voltage**	Yes	Go to next step.
		No	Repair or replace wiring harness.
11	Disconnect immobilizer unit connector. Turn engine switch to ON. Is there battery voltage at immobilizer unit harness-side terminal J?	Yes	Inspect for following: • Open or short circuit between immobilizer unit terminal A and PCM terminal 54
		No	Go to next step.
12	Inspect for following: • Fuel quality (e.g.: include water contamination, winter/summer blend) • Fuel line/fuel filter clogging • Cracks on intake-air system parts • Intake-air system restriction Are all items okay?	Yes	Go to next step.
		No	Service as necessary. Repeat Step 12.
13	Is engine overheating?	Yes	Go to symptom troubleshooting “NO.17 COOLING SYSTEM CONCERNS-OVERHEATING”.
		No	Go to next step.
14	**Note** • Ignore DTC P0122, P0123, P0222 or P0223 while performing this test. Disconnect accelerator position sensor connector. Measure voltage at accelerator position sensor connector VREF terminal (terminal D) with engine switch ON. **Specification** **4.5—5.5 V** Is voltage okay?	Yes	Go to next step.
		No	Go to symptom troubleshooting “NO.26 CONSTANT VOLTAGE”.

F5

STEP	INSPECTION	RESULTS	ACTION
15	Connect WDS or equivalent to DLC-2. Turn engine switch to ON. Retrieve any DTC. Is DTC displayed?	Yes	**DTC is displayed:** Go to appropriate DTC test. **Communication error message is displayed:** Inspect for following: • Open circuit between PCM control relay and PCM terminal 53 or 79 • Open circuit PCM control relay and PCM terminal 69 • PCM control relay stuck open • Open or poor GND circuit (PCM terminal 65, 85, 103 or 104) • Poor connection vehicle body GND
		No	**No DTC is displayed:** Go to next step.
16	Does engine start normally after warm-up?	Yes	Inspect glow system operation. (See T–28 RELAY INSPECTION) Replace any malfunctioning part as necessary. If glow system is okay, go to next step.
		No	Go to next step.
17	Is there any restriction in exhaust system or catalyst converter?	Yes	Repair or replace as necessary.
		No	Go to next step.
18	Access RPM PID. Is RPM PID indicating engine speed during cranking engine?	Yes	Go to next step.
		No	Go to Step 20.
19	**Note** • The following test should be performed on the vehicles with A/C system. If the following test cannot be performed due to engine stalling, go to next step. • Go to next step for the vehicle without A/C system. Connect pressure gauge to A/C line. Turn blower and A/C switches on. Is pressure within specifications?	Yes	Go to next step.
		No	**A/C is always on:** Go to symptom troubleshooting “NO.24 A/C ALWAYS ON OR A/C COMPRESSOR RUNS CONTINUOUSLY”. **Other symptoms:** Inspect following: • Refrigerant charging amount • Main fan and/or additional fan operation
20	Depress accelerator pedal slightly. Crank engine. Does engine start now?	Yes	Inspect idle speed. (See F5–64 IDLE SPEED INSPECTION)
		No	Go to next step.
21	Inspect for fuel leakage from fuel pipe. Is any fuel leakage found on fuel pipe?	Yes	Repair or replace as necessary.
		No	Go to next step.
22	Visually inspect CKP sensor and teeth of pulse wheel. Are CKP sensor and teeth of pulse wheel okay?	Yes	Go to next step.
		No	Replace malfunctioning parts.
23	Measure gap between CKP sensor and teeth of pulse wheel. **Specification** **1.5—2.5 mm {0.059—0.098 in}** Is gap within specification?	Yes	Go to next step.
		No	Adjust CKP sensor position.
24	Visually inspect CMP sensor and teeth of pulse wheel. Are CMP sensor and teeth of pulse wheel okay?	Yes	Inspect following PIDs: (See F5–95 PCM INSPECTION) • ECT • IAT • MAF • RPM If PID value is not as specified, repair or replace malfunctioning parts. If PID value is okay, go to next step.
		No	Replace malfunctioning parts.
25	Inspect fuel pressure sensor. (See F5–109 FUEL PRESSURE SENSOR INSPECTION) Is fuel pressure okay?	Yes	Go to next step.
		No	Replace common rail.

STEP	INSPECTION	RESULTS	ACTION
26	Inspect suction control valve. (See F5–83 SUCTION CONTROL VALVE INSPECTION) Is suction control valve okay?	Yes	Go to next step.
		No	Repair supply pump. (See F5–82 SUPPLY PUMP INSPECTION)
27	Is engine compression correct? (See B4–16 COMPRESSION INSPECTION)	Yes	Go to next step.
		No	Inspect for following: • Damaged valve seat • Worn valve stem and valve guide • Worn or stuck piston ring • Worn piston, piston ring or cylinder • Improper valve timing Service as necessary.
28	Inspect fuel injector. (See F5–85 FUEL INJECTOR INSPECTION) Is fuel injector okay?	Yes	Go to next step.
		No	Repair or replace as necessary.
29	Inspect EGR system operation. Is EGR system operation normal?	Yes	Remove and inspect supply pump and common rail.
		No	Repair or replace malfunctioning part according to EGR system operation results.
30	Verify test results. • If okay, return to diagnostic index to service any additional symptoms. • If malfunction remains, replace PCM. (See F5–94 PCM REMOVAL/INSTALLATION)		

End Of Sie

NO.6 CRANKS NORMALLY BUT WILL NOT START

AME438018881W09

6	CRANKS NORMALLY BUT WILL NOT START
DESCRIPTION	• Starter cranks engine at normal speed but engine will not run. • Refer to symptom troubleshooting “No.5 Engine stalls” if this symptom appears after engine stall. • Fuel is in fuel tank. • Battery is in normal condition.
POSSIBLE CAUSE	• Poor fuel quality • Intake-air system restriction • Fuel line restriction • EGR system malfunction • Glow system malfunction • Inadequate fuel pressure • Fuel pressure sensor or related circuit malfunction • Suction control valve malfunction (built-in supply pump) • Fuel pressure limiter malfunction (built-in common rail) • Fuel leakage • Fuel filter clogging • Incorrect fuel injection timing • Erratic signal from CKP sensor • Erratic signal from CMP sensor • V-reference supply circuit malfunction • ECT sensor or related circuit malfunction • Accelerator position sensor or related circuit malfunction • MAF/IAT sensor or related circuit malfunction • Supply pump malfunction • Fuel injector malfunction • Immobilizer system and/or circuit malfunction • Low engine compression • Improper valve timing • IDM or related circuit malfunction • PCM control repay malfunction **Warning** **The following troubleshooting flow chart contains the fuel system diagnosis and repair procedures. Read the following warnings before performing the fuel system services:** • **Fuel vapor is hazardous. It can easily ignite, causing serious injury and damage. Always keep sparks and flames away from fuel.** • **Fuel line spills and leakage are dangerous. Fuel can ignite and cause serious injury or death and damage. Fuel can also irritate skin and eyes. To prevent this, always complete “BEFORE REPAIR PROCEDURE” and “AFTER REPAIR PROCEDURE” described in this manual.**

Diagnostic Procedure

STEP	INSPECTION	RESULTS	ACTION
1	**Note** • The following test should be performed for vehicles with immobilizer system. Go to Step 12 for vehicles without immobilizer system. Connect WDS or equivalent to DLC-2. Do following conditions appear? • Engine is not completely started. • DTC P1624 is displayed.	Yes	**Both conditions appear:** Go to Step4.
		No	**Either condition or some other condition appears:** Go to next step.
2	Does engine stall **approx. 2 s** after engine is started?	Yes	Go to next step.
		No	Immobilizer system is okay. Return to Step 12.
3	Is immobilizer unit connector securely connected to immobilizer unit?	Yes	Go to next step.
		No	Connect immobilizer unit connector securely. Return to Step 2.
4	Does security light flash and indicate any of following immobilizer system DTCs? **DTC** **02, 03, 11, 21**	Yes	Go to “ON-BOARD DIAGNOSTIC FUNCTION” of immobilizer system.
		No	Go to next step.
5	Does security light illuminate?	Yes	Go to Step 8.
		No	Go to next step.
6	Does security light flash and indicate either of following immobilizer system DTCs **more than 135 s** after engine switch is turned to ON? **DTC** **24, 30**	Yes	Go to “ON-BOARD DIAGNOSTIC FUNCTION” of immobilizer system.
		No	Go to next step.
7	Turn engine switch to OFF. Disconnect immobilizer unit connector. Connect jumper wire between immobilizer unit connector terminal M and GND. Turn engine switch to ON. Does security light illuminate?	Yes	Reconnect immobilizer unit connector. Go to next step.
		No	Inspect for open circuit between immobilizer unit connector terminal M and instrument cluster. If okay, inspect security light bulb. Repair or replace if necessary. Reconnect immobilizer unit connector, then return to Step 4.
8	Connect WDS or equivalent to DLC-2 and retrieve DTC. Is any following DTCs displayed? **DTC** **P1602, P1603, P1604, P1621, P1622, P1624**	Yes	Go to appropriate DTC test.
		No	Go to next step.
9	Disconnect accelerator position sensor connector. Inspect continuity between GND terminal at accelerator position sensor vehicle harness connector and body GND. Is there continuity?	Yes	Go to next step.
		No	Access PCM connector. Inspect for continuity between PCM connector 65 and 85 terminals and body GND. Repair or replace as necessary.
10	Turn engine switch to ON. Access VPWR PID. Is VPWR PID okay? **VPWR PID** **Battery positive voltage**	Yes	Go to next step.
		No	Repair or replace wiring harness.
11	Disconnect immobilizer unit connector. Turn engine switch to ON. Is there battery voltage at immobilizer unit harness-side terminal J?	Yes	Inspect for following: • Open or short circuit between immobilizer unit terminal A and PCM terminal 54
		No	Go to next step.
12	Inspect for following: • Fuel quality (e.g.: include water contamination, winter/summer blend) • Fuel line/fuel filter clogging • Cracks on intake-air system parts • Intake-air system restriction Are all items okay?	Yes	Go to next step.
		No	Service as necessary. Repeat Step 12.

STEP	INSPECTION	RESULTS	ACTION
13	**Note** • Ignore DTC P0122, P0123, P0222 or P0223 while performing this test. Disconnect accelerator position sensor connector. Measure voltage at accelerator position sensor connector VREF terminal (terminal D) with engine switch ON. **Specification** **4.5—5.5 V** Is voltage okay?	Yes	Go to next step.
		No	Go to symptom troubleshooting “NO.26 CONSTANT VOLTAGE”.
14	Connect WDS or equivalent to DLC-2. Turn engine switch to ON. Retrieve any DTC. Is DTC displayed?	Yes	**DTC is displayed:** Go to appropriate DTC test. **Communication error message is displayed:** Inspect for following: • Open circuit between PCM control relay and PCM terminal 53 or 79 • Open circuit PCM control relay and PCM terminal 69 • PCM control relay stuck open • Open or poor GND circuit (PCM terminal 65, 85, 103 or 104) • Poor connection vehicle body GND
		No	**No DTC is displayed:** Go to next step.
15	Inspect glow system operation. (See T–28 RELAY INSPECTION) Is glow system operation normal?	Yes	Go to next step.
		No	Repair or replace malfunctioning part according to glow system operation results.
16	Inspect for fuel leakage from fuel pipe. Is any fuel leakage found on fuel pipe?	Yes	Repair or replace as necessary.
		No	Go to next step.
17	Visually inspect CKP sensor and teeth of pulse wheel. Are CKP sensor and teeth of pulse wheel okay?	Yes	Go to next step.
		No	Replace malfunctioning parts.
18	Measure gap between CKP sensor and teeth of pulse wheel. **Specification** **1.5—2.5 mm {0.059—0.098 in}** Is gap within specification?	Yes	Go to next step.
		No	Adjust CKP sensor position.
19	Visually inspect CMP sensor and teeth of pulse wheel. Are CMP sensor and teeth of pulse wheel okay?	Yes	Inspect following PIDs: (See F5–95 PCM INSPECTION) • ECT • IAT • MAF • RPM If PID value is not as specified, repair or replace malfunctioning parts. If PID value is okay, go to next step.
		No	Replace malfunctioning parts.
20	Inspect fuel pressure sensor. (See F5–109 FUEL PRESSURE SENSOR INSPECTION) Is fuel pressure okay?	Yes	Go to next step.
		No	Replace common rail.
21	Inspect suction control valve. (See F5–83 SUCTION CONTROL VALVE INSPECTION) Is suction control valve okay?	Yes	Go to next step.
		No	Repair supply pump. (See F5–82 SUPPLY PUMP INSPECTION)
22	Is engine compression correct? (See B4–16 COMPRESSION INSPECTION)	Yes	Go to next step.
		No	Inspect for following: • Damaged valve seat • Worn valve stem and valve guide • Worn or stuck piston ring • Worn piston, piston ring or cylinder • Improper valve timing Service as necessary.

STEP	INSPECTION	RESULTS	ACTION
23	Inspect fuel injector. (See F5–85 FUEL INJECTOR INSPECTION) Is fuel injector okay?	Yes	Go to next step.
		No	Repair or replace as necessary.
24	Inspect EGR system operation. Is EGR system operation normal?	Yes	Remove and inspect supply pump and common rail.
		No	Repair or replace malfunctioning part according to EGR system operation results.
25	Verify test results. • If okay, return to diagnostic index to service any additional symptoms. • If malfunction remains, replace PCM. (See F5–94 PCM REMOVAL/INSTALLATION)		

End Of Sie

NO.7 SLOW RETURN TO IDLE

AME438018881W10

7	SLOW RETURN TO IDLE
DESCRIPTION	• Engine takes more time than normal to return to idle speed. • Engine speed continues at fast idle after warm-up.
POSSIBLE CAUSE	• Thermostat is stuck open • Fuel injection timing is incorrect • Erratic signal from CKP sensor • Erratic signal from CMP sensor • ECT sensor or related circuit malfunction • Accelerator position sensor or related circuit malfunction • MAF/IAT sensor or related circuit malfunction • Fuel pressure sensor or related circuit malfunction • Incorrect adjustment accelerator pedal position sensor and/or idle switch • Incorrect adjustment of idle speed • Excessive fuel pressure • Fuel pressure limiter malfunction (built-in common rail) • Fuel injector malfunction (incorrect fuel regulate pressure) • Main fan control system malfunction • Neutral switch or related circuit malfunction • IDM or related circuit malfunction **Warning** **The following troubleshooting flow chart contains the fuel system diagnosis and repair procedures. Read the following warnings before performing the fuel system services:** • **Fuel vapor is hazardous. It can easily ignite, causing serious injury and damage. Always keep sparks and flames away from fuel.** • **Fuel line spills and leakage are dangerous. Fuel can ignite and cause serious injury or death and damage. Fuel can also irritate skin and eyes. To prevent this, always complete "BEFORE REPAIR PROCEDURE" and "AFTER REPAIR PROCEDURE" described in this manual.**

Diagnostic Procedure

STEP	INSPECTION	RESULTS	ACTION
1	Connect WDS or equivalent to DLC-2. Turn engine switch to ON. Retrieve any DTC. Is DTC displayed?	Yes	**DTC is displayed:** Go to appropriate DTC test. **Communication error message is displayed:** Inspect for following: • Open circuit between PCM control relay and PCM terminal 53 or 79 • Open circuit PCM control relay and PCM terminal 69 • PCM control relay stuck open • Open or poor GND circuit (PCM terminal 65, 85, 103 or 104) • Poor connection vehicle body GND
		No	**No DTC is displayed:** Go to next step.

STEP	INSPECTION	RESULTS	ACTION
2	Access ECT PID. Start and warm-up engine to normal operating temperature. Is ECT PID reading between **82—112 °C {180—233 °F}**?	Yes	Go to next step.
		No	**ECT PID is higher than 112 °C {233 °F}:** Go to symptom troubleshooting “NO.17 COOLING SYSTEM CONCERNS-OVERHEATING”. **ECT PID is less than 82 °C {180 °F}:** Go to symptom troubleshooting “NO.18 COOLING SYSTEM CONCERNS-RUNS COLD”.
3	Inspect idle speed. (See F5–64 IDLE SPEED INSPECTION) Is idle speed correct?	Yes	Go to next step.
		No	Repair or replace malfunctioning part according to idle speed inspection results.
4	Inspect main fan control system operation. Does main fan control operate properly?	Yes	Go to next step.
		No	Repair or replace malfunctioning part according to main fan control system operation inspection results.
5	Inspect adjustment of accelerator position sensor and idle switch. (See F5–102 ACCELERATOR POSITION SENSOR INSPECTION) (See F5–100 IDLE SWITCH INSPECTION) Are accelerator position sensor and idle switch adjusted correctly?	Yes	Go to next step.
		No	Adjust accelerator position sensor and idle switch correctly. (See F5–103 ACCELERATOR POSITION SENSOR ADJUSTMENT) (See F5–101 IDLE SWITCH ADJUSTMENT)
6	Inspect adjustment of neutral switch. (See F5–99 NEUTRAL SWITCH INSPECTION) Is neutral switch adjusted correctly?	Yes	Go to next step.
		No	Adjust neutral switch correctly.
7	Visually inspect CKP sensor and teeth of pulse wheel. Are CKP sensor and teeth of pulse wheel okay?	Yes	Go to next step.
		No	Replace malfunctioning parts.
8	Measure gap between CKP sensor and teeth of pulse wheel. **Specification** **1.5—2.5 mm {0.059—0.098 in}** Is gap within specification?	Yes	Go to next step.
		No	Adjust CKP sensor position.
9	Visually inspect CMP sensor and teeth of pulse wheel. Are CMP sensor and teeth of pulse wheel okay?	Yes	Inspect following PIDs: (See F5–95 PCM INSPECTION) • ECT • IAT • MAF • RPM If PID value is not as specified, repair or replace malfunctioning parts. If PID value is okay, go to next step.
		No	Replace malfunctioning parts.
10	Remove thermostat and inspect operation. (See E–16 THERMOSTAT REMOVAL/INSTALLATION) (See E–17 THERMOSTAT INSPECTION) Is thermostat okay?	Yes	Go to next step.
		No	Replace thermostat.
11	Inspect fuel injector relief pressure. Is fuel injector relief pressure okay?	Yes	Remove and inspect supply pump and common rail.
		No	Replace fuel injector.
12	Verify test results. • If okay, return to diagnostic index to service any additional symptoms. • If malfunction remains, replace PCM. (See F5–94 PCM REMOVAL/INSTALLATION)		

End Of Ste

F5

NO.8 ENGINE RUNS ROUGH/ROLLING IDLE

AME438018881W11

8	ENGINE RUNS ROUGH/ROLLING IDLE
DESCRIPTION	• Engine speed fluctuates between specified idle speed and lower speed and engine shakes excessively. • Idle speed is too slow and engine shakes excessively.
POSSIBLE CAUSE	• Poor fuel quality • Air leakage from intake-air system • Intake-air system restriction • Incorrect idle speed • Engine overheating • A/C system improper operation • EGR system improper operation • EGR water cooler malfunction • Glow system malfunction • Fuel leakage • Inadequate fuel pressure • Fuel pressure sensor or related circuit malfunction • Suction control valve malfunction (built-in supply pump) • Fuel pressure limiter malfunction (built-in common rail) • Fuel filter clogging • Fuel line restriction • Incorrect fuel injection timing • Erratic signal from CKP sensor • Erratic signal from CMP sensor • ECT sensor or related circuit malfunction • Boost sensor or related circuit malfunction • Idle switch misadjustment • Idle switch or related circuit malfunction • Accelerator position sensor misadjustment • Accelerator position sensor or related circuit malfunction • MAF/IAT sensor malfunction • Neutral switch or related circuit malfunction • Supply pump malfunction • Fuel injector malfunction • Low engine compression • Improper valve timing • Engine compression excessive unbalance for each cylinder • Unbalanced fuel injection amount for each cylinder • IDM or related circuit malfunction **Warning** **The following troubleshooting flow chart contains the fuel system diagnosis and repair procedures. Read the following warnings before performing the fuel system services:** • **Fuel vapor is hazardous. It can easily ignite, causing serious injury and damage. Always keep sparks and flames away from fuel.** • **Fuel line spills and leakage are dangerous. Fuel can ignite and cause serious injury or death and damage. Fuel can also irritate skin and eyes. To prevent this, always complete "BEFORE REPAIR PROCEDURE" and "AFTER REPAIR PROCEDURE" described in this manual.**

Diagnostic Procedure

STEP	INSPECTION	RESULTS	ACTION
1	Inspect for following: • Fuel quality (e.g.: including water contamination, winter/summer blend) • Fuel line/fuel filter clogging • Loose bands on intake-air system • Cracks on intake-air system parts • Intake-air system restriction • Vacuum leakage Are all items okay?	Yes	Go to next step.
		No	Service as necessary Repeat Step 1.
2	Is engine overheating?	Yes	Go to symptom troubleshooting "NO.17 COOLING SYSTEM CONCERNS—OVERHEATING."
		No	Go to next step.

STEP	INSPECTION	RESULTS	ACTION
3	Connect WDS or equivalent to DLC-2. Turn engine switch to ON. Retrieve any DTC. Is DTC displayed?	Yes	**DTC is displayed:** Go to appropriate DTC test. **Communication error message is displayed:** Inspect for following: • Open circuit between PCM control relay and PCM terminal 53 or 79 • Open circuit PCM control relay and PCM terminal 69 • PCM control relay stuck open • Open or poor GND circuit (PCM terminal 65, 85, 103 or 104) • Poor connection vehicle body GND
		No	**No DTC is displayed:** Go to next step.
4	Does engine run normal after warm-up?	Yes	Inspect glow system operation. (See T–28 RELAY INSPECTION) Replace any malfunctioning part as necessary. If glow system is okay, go to next step.
		No	Go to next step.
5	**Note** • The following test should be performed on the vehicles with A/C system. If the following test cannot be performed due to engine stalling, go to next step. • Go to next step for the vehicle without A/C system. Connect pressure gauge to A/C line. Turn blower and A/C switches on. Is pressure within specifications?	Yes	Go to next step.
		No	**A/C is always on:** Go to symptom troubleshooting “NO.24 A/C ALWAYS ON OR A/C COMPRESSOR RUNS CONTINUOUSLY”. **Other symptoms:** Inspect for following: • Refrigerant charging amount • Cooling fan and/or condenser fan operation
6	Depress accelerator pedal slightly. Crank engine. Does engine start now?	Yes	Inspect idle speed. (See F5–64 IDLE SPEED INSPECTION)
		No	Go to next step.
7	Inspect adjustment of accelerator position sensor and idle switch. (See F5–102 ACCELERATOR POSITION SENSOR INSPECTION) (See F5–100 IDLE SWITCH INSPECTION) Are accelerator position sensor and idle switch adjusted correctly?	Yes	Go to next step.
		No	Adjust accelerator position sensor and idle switch correctly. (See F5–103 ACCELERATOR POSITION SENSOR ADJUSTMENT) (See F5–101 IDLE SWITCH ADJUSTMENT)
8	Inspect for fuel leakage from fuel pipe. Is any fuel leakage found on fuel pipe?	Yes	Repair or replace as necessary.
		No	Go to next step.
9	Visually inspect CKP sensor and teeth of pulse wheel. Are CKP sensor and teeth of pulse wheel okay?	Yes	Go to next step.
		No	Replace malfunctioning parts.
10	Measure gap between CKP sensor and teeth of pulse wheel. **Specification** **1.5—2.5 mm {0.059—0.098 in}** Is gap within specification?	Yes	Go to next step.
		No	Adjust CKP sensor position.
11	Visually inspect CMP sensor and teeth of pulse wheel. Are CMP sensor and teeth of pulse wheel okay?	Yes	Inspect following PIDs: (See F5–95 PCM INSPECTION) • ECT • IAT • MAF • MAP • RPM If PID value is not as specified, repair or replace malfunctioning parts. If PID value is okay, go to next step.
		No	Replace malfunctioning parts.

STEP	INSPECTION	RESULTS	ACTION
12	Inspect fuel pressure sensor. (See F5–109 FUEL PRESSURE SENSOR INSPECTION) Is fuel pressure okay?	Yes	Go to next step.
		No	Replace common rail.
13	Inspect suction control valve. (See F5–83 SUCTION CONTROL VALVE INSPECTION) Is suction control valve okay?	Yes	Go to next step.
		No	Repair supply pump. (See F5–82 SUPPLY PUMP INSPECTION)
14	Is engine compression correct? (See B4–16 COMPRESSION INSPECTION)	Yes	Go to next step.
		No	Inspect for following: • Damaged valve seat • Worn valve stem and valve guide • Worn or stuck piston ring • Worn piston, piston ring or cylinder • Improper valve timing Service as necessary.
15	Inspect fuel injector. (See F5–85 FUEL INJECTOR INSPECTION) Is fuel injector okay?	Yes	Go to next step.
		No	Repair or replace as necessary.
16	Inspect EGR system operation. Is EGR system operation normal?	Yes	Go to next step.
		No	Repair or replace malfunctioning part according to EGR system operation results.
17	Inspect EGR water cooler for following: • Coolant passage clogging/restriction • Exhaust gas clogging/restriction Is EGR water cooler okay?	Yes	Remove and inspect supply pump and common rail.
		No	Service as necessary.
18	Verify test results. • If okay, return to diagnostic index to service any additional symptoms. • If malfunction remains, replace PCM. (See F5–94 PCM REMOVAL/INSTALLATION)		

End Of Se

NO.9 FAST IDLE/RUNS ON

AME438018881W12

9	RUNS IDLE/RUNS ON
DESCRIPTION	• Engine speed continues at fast idle after warm-up. • Engine runs after engine key turned off.
POSSIBLE CAUSE	• ECT sensor or related circuit malfunction • Incorrect adjustment accelerator position sensor and/or idle switch • Suction control valve (built-in supply pump) • Fuel injector malfunction • IDM or related circuit malfunction **Warning** **The following troubleshooting flow chart contains the fuel system diagnosis and repair procedures. Read the following warnings before performing the fuel system services:** • **Fuel vapor is hazardous. It can easily ignite, causing serious injury and damage. Always keep sparks and flames away from fuel.** • **Fuel line spills and leakage are dangerous. Fuel can ignite and cause serious injury or death and damage. Fuel can also irritate skin and eyes. To prevent this, always complete "BEFORE REPAIR PROCEDURE" and "AFTER REPAIR PROCEDURE" described in this manual.**

Diagnostic Procedur

STEP	INSPECTION	RESULTS	ACTION
1	Connect WDS or equivalent to DLC-2. Access ECT PID. Start and warm-up engine to normal operating temperature. Is ECT PID reading between **82—112 °C {180—233 °F}**?	Yes	Go to next step.
		No	**ECT PID is higher than 112 °C{233 °F}:** Go to symptom troubleshooting "NO.17 COOLING SYSTEM CONCERNS—OVERHEATING". **ECT PID is less than 82 °C{180 °F}:** Go to symptom troubleshooting "NO.18 COOLING SYSTEM CONCERNS—RUNS COLD".
2	Perform self-test function using WDS or equivalent. Turn engine switch to ON. Retrieve any DTC. Is DTC displayed?	Yes	**DTC is displayed:** Go to appropriate DTC test. **Communication error message is displayed:** Inspect for following: • Open circuit between PCM control relay and PCM terminal 53 or 79 • Open circuit PCM control relay and PCM terminal 69 • PCM control relay stuck open • Open or poor GND circuit (PCM terminal 65, 85, 103 or 104) • Poor connection vehicle body GND
		No	**No DTC is displayed:** Go to next step.
3	Inspect suction control valve. (See F5–83 SUCTION CONTROL VALVE INSPECTION) Is suction control valve okay?	Yes	Go to next step.
		No	Repair supply pump. (See F5–82 SUPPLY PUMP INSPECTION)
4	Inspect fuel injector. (See F5–85 FUEL INJECTOR INSPECTION) Is fuel injector okay?	Yes	Verify accelerator position sensor and idle switch.
		No	Replace fuel injector. (See F5–84 FUEL INJECTOR REMOVAL/INSTALLATION)
5	Verify test results. • If okay, return to diagnostic index to service any additional symptoms. • If malfunction remains, replace PCM. (See F5–94 PCM REMOVAL/INSTALLATION)		

End Of Sie

F5

NO.10 LOW IDLE/STALLS DURING DECELERATION

AME438018881W13

10	LOW IDLE/STALLS DURING DECELERATION
DESCRIPTION	• Engine stops unexpectedly at beginning of deceleration or recovery from deceleration.
POSSIBLE CAUSE	• Intake-air system restriction • Poor fuel quality • A/C system improper operation • Inadequate fuel pressure • Suction control valve malfunction (built-in supply pump) • Fuel pressure limiter malfunction (built-in common rail) • Fuel leakage • Fuel line restriction • Fuel filter clogging • Incorrect fuel injection timing • Improper idle speed • Erratic signal from CKP sensor • Erratic signal from CMP sensor • Supply pump malfunction • Fuel injector malfunction • Low engine compression • Improper valve timing • Glow system malfunction • EGR system malfunction • Vacuum leakage • MAF/IAT sensor or related circuit malfunction • ECT sensor or related circuit malfunction • Fuel pressure sensor or related circuit malfunction • Neutral switch malfunction or related circuit malfunction • Clutch switch malfunction or related circuit malfunction • Accelerator position sensor or related circuit malfunction • Idle switch or related circuit malfunction • Incorrect adjustment accelerator position sensor and/or idle switch • IDM or related circuit malfunction **Warning** **The following troubleshooting flow chart contains the fuel system diagnosis and repair procedures. Read the following warnings before performing the fuel system services:** • **Fuel vapor is hazardous. It can easily ignite, causing serious injury and damage. Always keep sparks and flames away from fuel.** • **Fuel line spills and leakage are dangerous. Fuel can ignite and cause serious injury or death and damage. Fuel can also irritate skin and eyes. To prevent this, always complete "BEFORE REPAIR PROCEDURE" and "AFTER REPAIR PROCEDURE" described in this manual.**

Diagnostic Procedure

STEP	INSPECTION	RESULTS	ACTION
1	Does engine idle rough?	Yes	Go to symptom troubleshooting "NO.8 ENGINE RUNS ROUGH/ROLLING IDLE".
		No	Go to next step.
2	Inspect for following: • Fuel line/fuel filter clogging • Intake-air system restriction • Vacuum leakage • Fuel quality (e.g.: include water contamination, winter/summer blend) Are all items okay?	Yes	Go to next step.
		No	Service as necessary. Repeat Step 2.
3	Perform self-test function using WDS or equivalent. Turn engine switch to ON. Retrieve any DTC. Is DTC displayed?	Yes	**DTC is displayed:** Go to appropriate DTC test. **Communication error message is displayed:** Inspect for following: • Open circuit between PCM control relay and PCM terminal 53 or 79 • Open circuit PCM control relay and PCM terminal 69 • PCM control relay stuck open • Open or poor GND circuit (PCM terminal 65, 85, 103 or 104) • Poor connection vehicle body GND
		No	**No DTC is displayed:** Go to next step.

STEP	INSPECTION	RESULTS	ACTION
4	Inspect idle speed. (See F5–64 IDLE SPEED INSPECTION) Is idle speed correct?	Yes	Go to next step.
		No	Repair or replace malfunctioning part according to idle speed inspection results.
5	Inspect adjustment of accelerator position sensor and idle switch. Are accelerator position sensor and idle switch adjusted correctly?	Yes	Go to next step
		No	Adjust accelerator position sensor and idle switch correctly.
6	Measure voltage PCM terminal 33 and 56. Are voltages okay?	Yes	Go to next step.
		No	**PCM terminal 33 does not specified:** Inspect clutch switch and related harness. **PCM terminal 56 does not specified:** Inspect neutral switch and related harness.
7	Visually inspect CKP sensor and teeth of pulse wheel. Are CKP sensor and teeth of pulse wheel okay?	Yes	Go to next step.
		No	Replace malfunctioning parts.
8	Measure gap between CKP sensor and teeth of pulse wheel. **Specification** **1.5—2.5 mm {0.059—0.098 in}** Is gap within specification?	Yes	Go to next step.
		No	Adjust CKP sensor position.
9	Visually inspect CMP sensor and teeth of pulse wheel. Are CMP sensor and teeth of pulse wheel okay?	Yes	Inspect following PIDs: (See F5–95 PCM INSPECTION) • ECT • IAT • MAF • RPM If PID value is not as specified, repair or replace malfunctioning parts. If PID value is okay, go to next step.
		No	Replace malfunctioning parts.
10	Inspect fuel pressure sensor. (See F5–109 FUEL PRESSURE SENSOR INSPECTION) Is fuel pressure okay?	Yes	Go to next step.
		No	Replace common rail.
11	Inspect suction control valve. (See F5–83 SUCTION CONTROL VALVE INSPECTION) Is suction control valve okay?	Yes	Go to next step.
		No	Repair supply pump. (See F5–82 SUPPLY PUMP INSPECTION)
12	Is engine compression correct? (See B4–16 COMPRESSION INSPECTION)	Yes	Go to next step.
		No	Inspect for following: • Damaged valve seat • Worn valve stem and valve guide • Worn or stuck piston ring • Worn piston, piston ring or cylinder • Improper valve timing Service as necessary.
13	Inspect fuel injector. (See F5–85 FUEL INJECTOR INSPECTION) Is fuel injector okay?	Yes	Go to next step.
		No	Repair or replace as necessary.
14	**Note** • The following test should be performed on the vehicles with A/C system. If the following test cannot be performed due to engine stalling, go to next step. • Go to next step for the vehicle without A/C system. Connect pressure gauge to A/C line. Turn blower and A/C switches on. Is pressure within specifications?	Yes	Go to next step.
		No	**A/C is always on:** Go to symptom troubleshooting “NO.24 A/C ALWAYS ON OR A/C COMPRESSOR RUNS CONTINUOUSLY”. **Other symptoms:** Inspect following: • Refrigerant charging amount • Cooling fan and/or condenser fan operation
15	Inspect EGR system operation. Is EGR system operation normal?	Yes	Go to next step.
		No	Repair or replace malfunctioning part according to EGR system operation results.

STEP	INSPECTION	RESULTS	ACTION
16	Inspect glow system operation. (See T–28 RELAY INSPECTION) Is glow system operation normal?	Yes	Remove and inspect supply pump and common rail.
		No	Service as necessary.
17	Verify test results. • If okay, return to diagnostic index to service any additional symptoms. • If malfunction remains, replace PCM. (See F5–94 PCM REMOVAL/INSTALLATION)		

End Of Sie

NO.11 ENGINE STALLS/QUITS, ENGINE RUNS ROUGH, MISSES, BUCK/JERK, HESITATION/STUMBLE, SURGES

AME438018881W14

11	ENGINE STALLS/QUITS, ENGINE RUNS ROUGH, MISSES, BUCK/JERK, HESITATION/STUMBLE, SURGES
DESCRIPTION	• Engine stops unexpectedly at beginning of acceleration or during cruise. • Engine stops unexpectedly while cruising. • Engine speed fluctuates during acceleration or cruising. • Engine misses during acceleration or cruising. • Vehicle bucks/jerks during acceleration, during or deceleration. • Momentary pause at beginning of acceleration or during acceleration. • Momentary minor irregularity in engine output.
POSSIBLE CAUSE	• Poor fuel quality • Glow system malfunction • Air leakage from intake-air system • Intake-air system restriction • Air cleaner restriction • Engine overheating • A/C system improper operation • Turbocharger malfunction • Variable swirl control (VSC) system malfunction • EGR system malfunction • Neutral switch or related circuit malfunction • Vacuum leakage • Fuel line restriction • Fuel filter clogging • Incorrect fuel injection timing • Erratic signal from CKP sensor • Erratic signal from CMP sensor • ECT sensor or related circuit malfunction • Boost sensor or related circuit malfunction • Accelerator position sensor or related circuit malfunction • MAF/IAT sensor or related circuit malfunction • IAT sensor No.2 or related circuit malfunction • Intermittent open or short circuit MAF sensor, accelerator position sensor, idle switch and VSS • Incorrect adjustment accelerator position sensor and/or idle switch • Incorrect idle speed • Inadequate fuel pressure • Fuel pressure sensor or related circuit malfunction • Suction control valve malfunction (built-in supply pump) • Fuel pressure limiter malfunction (built-in common rail) • Supply pump malfunction • Fuel injector malfunction • Low engine compression • Improper valve timing • Exhaust system and/or catalyst converter restriction • Clutch slippage • IDM or related circuit malfunction **Warning** **The following troubleshooting flow chart contains the fuel system diagnosis and repair procedures. Read the following warnings before performing the fuel system services:** • **Fuel vapor is hazardous. It can easily ignite, causing serious injury and damage. Always keep sparks and flames away from fuel.** • **Fuel line spills and leakage are dangerous. Fuel can ignite and cause serious injury or death and damage. Fuel can also irritate skin and eyes. To prevent this, always complete "BEFORE REPAIR PROCEDURE" and "AFTER REPAIR PROCEDURE" described in this manual.**

Diagnostic Procedure

STEP	INSPECTION	RESULTS	ACTION
1	Is idle speed stable?	Yes	Go to next step.
		No	Go to symptom troubleshooting “NO.8 ENGINE RUNS ROUGH/ROLLING IDLE”.
2	Is engine overheating?	Yes	Go to symptom troubleshooting “NO.17 COOLING SYSTEM CONCERNS—OVERHEATING”.
		No	Go to next step.
3	Perform self-test function using WDS or equivalent. Turn engine switch to ON. Retrieve any DTC. Is DTC displayed?	Yes	**DTC is displayed:** Go to appropriate DTC test. **Communication error message is displayed:** Inspect for following: • Open circuit between PCM control relay and PCM terminal 53 or 79 • Open circuit PCM control relay and PCM terminal 69 • PCM control relay stuck open • Open or poor GND circuit (PCM terminal 65, 85, 103 or 104) • Poor connection vehicle body GND
		No	**No DTC is displayed:** Go to next step.
4	Inspect for following: • Fuel quality (e.g.: including water contamination, winter/summer blend) • Fuel line/fuel filter clogging and/or restriction • Intake-air system restriction • Exhaust system and/or catalyst converter restriction Are all items okay?	Yes	Go to next step.
		No	Service as necessary. Repeat Step 4.
5	Does engine run normal after warm-up?	Yes	Inspect glow system operation. (See T–28 RELAY INSPECTION) Replace any malfunctioning part as necessary. If glow system is okay, go to next step.
		No	Go to next step.
6	**Note** • The following test should be performed on the vehicles with A/C system. If the following test cannot be performed due to engine stalling, go to next step. • Go to next step for the vehicle without A/C system. Connect pressure gauge to A/C line. Turn blower and A/C switches on. Is pressure within specifications?	Yes	Go to next step.
		No	**A/C is always on:** Go to symptom troubleshooting “NO.24 A/C ALWAYS ON OR A/C COMPRESSOR RUNS CONTINUITY”. **Other symptoms:** Inspect following: • Refrigerant charging amount • Main fan and/or additional fan operation
7	Inspect hose bands between following parts: • Turbocharger compressor housing and air cleaner • Turbocharger compressor housing and charge air cooler Are hose bands loose?	Yes	Retighten hose bands. If concern is resolved, complete inspection. If concern still exists, go to next step.
		No	Go to next step.
8	Inspect for improper operation, kinks, clogging or disconnection on guide blade actuator. Is guide blade actuator okay?	Yes	Turbocharger is okay. Go to next step.
		No	Repair or replace as necessary. If concern is resolved, complete inspection. If concern still exists, turbocharger is okay. Go to next step.
9	Perform EGR system inspection. Is EGR system okay?	Yes	Go to next step.
		No	Repair or replace malfunctioning part according to EGR system operation results.
10	Inspect idle speed. (See F5–64 IDLE SPEED INSPECTION) Is idle speed correct?	Yes	Go to next step.
		No	Repair or replace malfunctioning part according to idle speed inspection results.

STEP	INSPECTION	RESULTS	ACTION
11	Inspect adjustment of accelerator position sensor and idle switch. (See F5–102 ACCELERATOR POSITION SENSOR INSPECTION) (See F5–100 IDLE SWITCH INSPECTION) Are accelerator position sensor and idle switch adjusted correctly?	Yes	Go to next step.
		No	Adjust accelerator position sensor and idle switch correctly. (See F5–103 ACCELERATOR POSITION SENSOR ADJUSTMENT) (See F5–101 IDLE SWITCH ADJUSTMENT)
12	Inspect adjustment of neutral switch. (See F5–99 NEUTRAL SWITCH INSPECTION) Is neutral switch adjusted correctly?	Yes	Go to next step.
		No	Adjust neutral switch correctly.
13	Visually inspect CKP sensor and teeth of pulse wheel. Are CKP sensor and teeth of pulse wheel okay?	Yes	Go to next step.
		No	Replace malfunctioning parts.
14	Measure gap between CKP sensor and teeth of pulse wheel. **Specification** **1.5—2.5 mm {0.059—0.098 in}** Is gap within specification?	Yes	Go to next step.
		No	Adjust CKP sensor position.
15	Visually inspect CMP sensor and teeth of pulse wheel. Are CMP sensor and teeth of pulse wheel okay?	Yes	Inspect following PIDs: (See F5–95 PCM INSPECTION) • ECT • IAT • MAF • RPM If PID value is not as specified, repair or replace malfunctioning parts. If PID value is okay, go to next step.
		No	Replace malfunctioning parts.
16	Inspect fuel pressure sensor. (See F5–109 FUEL PRESSURE SENSOR INSPECTION) Is fuel pressure okay?	Yes	Go to next step.
		No	Replace common rail.
17	Inspect suction control valve. (See F5–83 SUCTION CONTROL VALVE INSPECTION) Is suction control valve okay?	Yes	Go to next step.
		No	Repair supply pump. (See F5–82 SUPPLY PUMP INSPECTION)
18	Is engine compression correct? (See B4–16 COMPRESSION INSPECTION)	Yes	Go to next step.
		No	Inspect for following: • Damaged valve seat • Worn valve stem and valve guide • Worn or stuck piston ring • Worn piston, piston ring or cylinder • Improper valve timing Service as necessary.
19	Inspect fuel injector. (See F5–85 FUEL INJECTOR INSPECTION) Is fuel injector okay?	Yes	Go to next step.
		No	Repair or replace as necessary.
20	Inspect timing belt for following: • Chipping of gear teeth • Low tension • Breakage damage or cracks Is timing belt okay?	Yes	Inspect following: • Clutch slippage • CKP sensor • VSS If okay, remove and inspect supply pump and common rail.
		No	If timing is incorrect, adjust valve timing. If timing belt is not okay, replace timing belt.
21	Verify test results. • If okay, return to diagnostic index to service any additional symptoms. • If malfunction remains, replace PCM. (See F5–94 PCM REMOVAL/INSTALLATION)		

End Of Sie

NO.12 LACK/LOSS OF POWER-ACCELERATION/CRUISE

AME438018881W15

12	LACK/LOSS OF POWER-ACCELERATION CRUISE
DESCRIPTION	• Performance is poor under load (e.g., power down when climbing hills).
POSSIBLE CAUSE	• Poor fuel quality • Air leakage from intake-air system • Intake-air system restriction • Air cleaner restriction • Engine overheating • A/C system improper operation • Improper operation of A/C cut-off control • Variable boost control (VBC) system malfunction • Variable swirl control (VSC) system malfunction • EGR system malfunction • Vacuum leakage • Clutch slippage • Exhaust system and/or catalyst converter restriction • Fuel line restriction • Fuel filter clogging • Incorrect fuel injection timing • Erratic signal from CKP sensor • Erratic signal from CMP sensor • ECT sensor or related circuit malfunction • Boost sensor or related circuit malfunction • Accelerator position sensor or related circuit malfunction • MAF/IAT sensor or related circuit malfunction • IAT sensor No.2 or related circuit malfunction • Intermittent open or short circuit MAF sensor, accelerator position sensor, idle switch and VSS • Incorrect adjustment accelerator position sensor and/or idle switch • Incorrect idle speed • Inadequate fuel pressure • Fuel pressure sensor or related circuit malfunction • Suction control valve malfunction (built-in supply pump) • Fuel pressure limiter malfunction (built-in common rail) • Supply pump malfunction • Fuel injector malfunction • Low engine compression • Turbocharger malfunction • Charge air cooler malfunction • Brake system dragging • Intake shutter valve malfunction • Guide blade valve malfunction • IDM or related circuit malfunction **Warning** **The following troubleshooting flow chart contains the fuel system diagnosis and repair procedures. Read the following warnings before performing the fuel system services:** • **Fuel vapor is hazardous. It can easily ignite, causing serious injury and damage. Always keep sparks and flames away from fuel.** • **Fuel line spills and leakage are dangerous. Fuel can ignite and cause serious injury or death and damage. Fuel can also irritate skin and eyes. To prevent this, always complete "BEFORE REPAIR PROCEDURE" and "AFTER REPAIR PROCEDURE" described in this manual.**

Diagnostic Procedure

STEP	INSPECTION	RESULTS	ACTION
1	Is idle speed stable?	Yes	Go to next step.
		No	Go to symptom troubleshooting "NO.8 ENGINE RUNS ROUGH/ROLLING IDLE".
2	Is engine overheating?	Yes	Go to symptom troubleshooting "NO.17 COOLING SYSTEM CONCERNS—OVERHEATING".
		No	Go to next step.

STEP	INSPECTION	RESULTS	ACTION
3	Perform self-test function using WDS or equivalent. Turn engine switch to ON. Retrieve any DTC. Is DTC displayed?	Yes	**DTC is displayed:** Go to appropriate DTC test. **Communication error message is displayed:** Inspect for following: • Open circuit between PCM control relay and PCM terminal 53 or 79 • Open circuit PCM control relay and PCM terminal 69 • PCM control relay stuck open • Open or poor GND circuit (PCM terminal 65, 85, 103 or 104) • Poor connection vehicle body GND
		No	**No DTC is displayed:** Go to next step.
4	Inspect for followings: • Fuel quality (e.g.: including water contamination, winter/summer blend) • Fuel line/fuel filter clogging and/or restriction • Intake-air system restriction • Exhaust system and/or catalyst converter restriction • Charge air cooler condition (restriction or damaged) • Vacuum leakage Are all items okay?	Yes	Go to next step.
		No	Service as necessary. Repeat Step 4.
5	Inspect intake shutter valve and VSC valve operations. (See F5–253 ENGINE CONTROL SYSTEM OPERATION INSPECTION) Is there any problem?	Yes	Repair or replace as necessary.
		No	Go to next step.
6	Inspect guide blade valve operation. (See F5–253 ENGINE CONTROL SYSTEM OPERATION INSPECTION) Is there any problem?	Yes	Repair or replace as necessary.
		No	Go to next step.
7	Inspect A/C cut-off operation. Does A/C cut-off work properly?	Yes	Go to next step.
		No	Repair or replace malfunctioning part according to A/C cut-off system inspection results.
8	Inspect hose bands between following parts: • Turbocharger compressor housing and air cleaner • Turbocharger compressor housing and charge air cooler Are hose bands loose?	Yes	Retighten hose bands. If concern is resolved, complete inspection. If concern still exists, go to next step.
		No	Go to next step.
9	Inspect for improper operation, kinks, clogging or disconnection on guide blade actuator. (See F5–253 ENGINE CONTROL SYSTEM OPERATION INSPECTION) Is actuator okay?	Yes	Go to next step.
		No	Repair or replace as necessary. If concern is resolved, complete inspection. If concern still exists, turbocharger is okay. Go to next step.
10	Remove parts necessary to inspect turbocharger. Do not remove turbocharger. Inspect if turbocharger compressor wheel is bent, damaged, or interfering with housing on vehicle. Is there any problem?	Yes	Replace turbocharger.
		No	Go to next step.
11	Inspect if turbocharger compressor wheel locknut is loose or has fallen down inside turbocharger. Is there any problem?	Yes	Replace turbocharger.
		No	Go to next step.
12	Inspect if turbocharger compressor wheel by hand. Does wheel turn easily and smoothly?	Yes	Go to next step.
		No	Replace turbocharger.

STEP	INSPECTION	RESULTS	ACTION
13	Inspect if turbocharger turbine wheel is damaged, cracked or interfering with housing on vehicle. **Note** • Inspect all fins on each turbine wheel. Is there any problem?	Yes	Replace turbocharger.
		No	Go to next step.
14	Is any engine oil found inside turbocharger turbine housing?	Yes	**Excessive amount of oil is found:** Replace turbocharger. **Small amount of oil is found:** Wipe oil off of vehicle, then go to next step.
		No	Go to next step.
15	Is any engine oil found inside turbocharger compressor hosing?	Yes	Wipe oil off of vehicle and install all removed parts in Step 10. Then, go to next step.
		No	Turbocharger is okay. Install all parts removed in Step10. Then, go to next step.
16	Perform EGR system inspection. Is EGR system okay?	Yes	Go to next step.
		No	Repair or replace malfunctioning part according to EGR system operation results.
17	Inspect idle speed. (See F5–64 IDLE SPEED INSPECTION) Is idle speed correct?	Yes	Go to next step.
		No	Repair or replace malfunctioning part according to idle speed inspection results.
18	Inspect adjustment of accelerator position sensor and idle switch. (See F5–102 ACCELERATOR POSITION SENSOR INSPECTION) (See F5–100 IDLE SWITCH INSPECTION) Are accelerator position sensor and idle switch adjusted correctly?	Yes	Go to next step.
		No	Adjust accelerator position sensor and idle switch correctly. (See F5–103 ACCELERATOR POSITION SENSOR ADJUSTMENT) (See F5–101 IDLE SWITCH ADJUSTMENT)
19	Visually inspect CKP sensor and teeth of pulse wheel. Are CKP sensor and teeth of pulse wheel okay?	Yes	Go to next step.
		No	Replace malfunctioning parts.
20	Measure gap between CKP sensor and teeth of pulse wheel. **Specification** **1.5—2.5 mm {0.059—0.098 in}** Is gap within specification?	Yes	Go to next step.
		No	Adjust CKP sensor position.
21	Visually inspect CMP sensor and teeth of pulse wheel. Are CMP sensor and teeth of pulse wheel okay?	Yes	Inspect following PIDs: (See F5–95 PCM INSPECTION) • ECT • IAT • MAF • MAP • RPM If PID value is not as specified, repair or replace malfunctioning parts. If PID value is okay, go to next step.
		No	Replace malfunctioning parts.
22	Inspect fuel pressure sensor. (See F5–109 FUEL PRESSURE SENSOR INSPECTION) Is fuel pressure okay?	Yes	Go to next step.
		No	Replace common rail.
23	Inspect suction control valve. (See F5–83 SUCTION CONTROL VALVE INSPECTION) Is suction control valve okay?	Yes	Go to next step.
		No	Repair supply pump. (See F5–82 SUPPLY PUMP INSPECTION)

STEP	INSPECTION	RESULTS	ACTION
24	Is engine compression correct? (See B4–16 COMPRESSION INSPECTION)	Yes	Go to next step.
		No	Inspect for followings: • Damaged valve seat • Worn valve stem and valve guide • Worn or stuck piston ring • Worn piston, piston ring or cylinder • Improper valve timing Service as necessary.
25	Inspect fuel injector. (See F5–85 FUEL INJECTOR INSPECTION) Is fuel injector okay?	Yes	Go to next step.
		No	Repair or replace as necessary.
26	Inspect timing belt for following: • Chipping of gear teeth • Low tension • Breakage damage or cracks Is timing belt okay?	Yes	Inspect following: • Clutch slippage • CKP sensor • Boost sensor and related circuit • Brake system for dragging If okay, remove and inspect supply pump and common rail.
		No	If valve timing is incorrect, adjust valve timing. If timing belt is not okay, replace timing belt.
27	Verify test results. • If okay, return to diagnostic index to service any additional symptoms. • If malfunction remains, replace PCM. (See F5–94 PCM REMOVAL/INSTALLATION)		

End Of Sie

NO.13 KNOCKING/PINGING

AME438018881W16

13	KNOCKING/PINGING
DESCRIPTION	• Excessive shrilly knocking sound from engine.
POSSIBLE CAUSE	• Poor fuel quality • Air leakage from intake-air system • Intake-air system restriction • Variable swirl control (VSC) system malfunction • Variable boost control (VBC) system malfunction • Intake shutter valve stuck close • VSC valve stuck close • Glow system malfunction • Low engine compression • Improper valve timing • Low coolant temperature • Incorrect fuel injection timing • Erratic signal from CKP sensor • Erratic signal from CMP sensor • ECT sensor or related circuit malfunction • MAF/IAT sensor or related circuit malfunction • Boost sensor or related malfunction • Fuel pressure sensor or related circuit malfunction • Accelerator position sensor or related circuit malfunction • Excessive fuel pressure • Fuel injector malfunction • Fuel return line restriction • EGR system malfunction • Exhaust system and/or catalyst converter restriction • Turbocharger malfunction • Charge air cooler malfunction • Suction control valve malfunction (built-in supply pump) **Warning** **The following troubleshooting flow chart contains the fuel system diagnosis and repair procedures. Read the following warnings before performing the fuel system services:** • **Fuel vapor is hazardous. It can easily ignite, causing serious injury and damage. Always keep sparks and flames away from fuel.** • **Fuel line spills and leakage are dangerous. Fuel can ignite and cause serious injury or death and damage. Fuel can also irritate skin and eyes. To prevent this, always complete "BEFORE REPAIR PROCEDURE" and "AFTER REPAIR PROCEDURE" described in this manual.**

Diagnostic Procedure

STEP	INSPECTION	RESULTS	ACTION
1	Does engine run cold?	Yes	Go to symptom troubleshooting “NO.18 COOLING SYSTEM CONCERNS—RUNS COLD”.
		No	Go to next step.
2	Inspect for following: • Fuel quality (e.g.: including water contamination, winter/summer blend) • Fuel return line clogging and/or restriction • Intake-air system restriction • Exhaust system and/or catalyst converter restriction • Charge air cooler condition (restriction or damaged) Are all items okay?	Yes	Go to next step.
		No	Service as necessary. Repeat Step 2.
3	Connect WDS or equivalent to DLC-2. Access ECT PID. Verify ECT PID is **above 80 °C {176 °F}**?	Yes	Go to next step.
		No	Inspect ECT PID.
4	Perform self-test function using WDS or equivalent. Turn engine switch to ON. Retrieve any DTC. Is DTC displayed?	Yes	**DTC is displayed:** Go to appropriate DTC test. **Communication error message is displayed:** Inspect for following: • Open circuit between PCM control relay and PCM terminal 53 or 79 • Open circuit PCM control relay and PCM terminal 69 • PCM control relay stuck open • Open or poor GND circuit (PCM terminal 65, 85, 103 or 104) • Poor connection vehicle body GND
		No	**No DTC is displayed:** Go to next step.
5	Inspect intake shutter valve and VSC valve operations. (See F5–253 ENGINE CONTROL SYSTEM OPERATION INSPECTION) Is there any problem?	Yes	Repair or replace as necessary.
		No	Go to next step.
6	Inspect guide blade valve operation. (See F5–253 ENGINE CONTROL SYSTEM OPERATION INSPECTION) Is there any problem?	Yes	Repair or replace as necessary.
		No	Go to next step.
7	Inspect hose bands between following parts: • Turbocharger compressor housing and air cleaner • Turbocharger compressor housing and charge air cooler Are hose bands loose?	Yes	Retighten hose bands. If concern is resolved, complete inspection. If concern still exists, go to next step.
		No	Go to next step.
8	Inspect for improper operation, kinks, clogging or disconnection on guide blade actuator. (See F5–253 ENGINE CONTROL SYSTEM OPERATION INSPECTION) Is actuator okay?	Yes	Go to next step.
		No	Repair or replace as necessary. If concern is resolved, complete inspection. If concern still exists, turbocharger is okay. Go to next step.
9	Remove parts necessary to inspect turbocharger. Do not remove turbocharger. Inspect if turbocharger compressor wheel is bent, damaged, or interfering with housing on vehicle. (See F5–68 TURBOCHARGER INSPECTION) Is there any problem?	Yes	Replace turbocharger.
		No	Go to next step.
10	Inspect if turbocharger compressor wheel locknut is loose or has fallen down inside turbocharger. Is there any problem?	Yes	Replace turbocharger.
		No	Go to next step.
11	Inspect turbocharger compressor wheel by hand. Does wheel turn easily and smoothly?	Yes	Go to next step.
		No	Replace turbocharger.

STEP	INSPECTION	RESULTS	ACTION
12	Inspect if turbocharger turbine wheel is damaged, cracked or interfering with housing on vehicle. **Note** • Inspect all fins on each turbine wheel. Is there any problem?	Yes	Replace turbocharger.
		No	Go to next step.
13	Is any engine oil found inside turbocharger turbine housing?	Yes	**Excessive amount of oil is found:** Replace turbocharger. **Small amount of oil is found:** Wipe oil off of vehicle, then go to next step.
		No	Go to next step.
14	Is any engine oil found inside turbocharger compressor hosing?	Yes	Wipe oil off of vehicle and install all removed parts in Step 10. Then, go to next step.
		No	Turbocharger is okay. Install all parts removed in Step10. Then, go to next step.
15	Perform EGR system inspection. Is EGR system okay?	Yes	Go to next step.
		No	Repair or replace malfunctioning part according to EGR system operation results.
16	Inspect glow system operation. (See T–28 RELAY INSPECTION) Is glow system operation normal?	Yes	Go to next step.
		No	Repair or replace malfunctioning part according to glow system operation results.
17	Visually inspect CKP sensor and teeth of pulse wheel. Are CKP sensor and teeth of pulse wheel okay?	Yes	Go to next step.
		No	Replace malfunctioning parts.
18	Measure gap between CKP sensor and teeth of pulse wheel. **Specification** **1.5—2.5 mm {0.059—0.098 in}** Is gap within specification?	Yes	Go to next step.
		No	Adjust CKP sensor position.
19	Visually inspect CMP sensor and teeth of pulse wheel. Are CMP sensor and teeth of pulse wheel okay?	Yes	Inspect following PIDs: (See F5–95 PCM INSPECTION) • ECT • IAT • MAF • MAP • RPM If PID value is not as specified, repair or replace malfunctioning parts. If PID value is okay, go to next step.
		No	Replace malfunctioning parts.
20	Is engine compression correct? (See B4–16 COMPRESSION INSPECTION)	Yes	Go to next step.
		No	Inspect for following: • Damaged valve seat • Worn valve stem and valve guide • Worn or stuck piston ring • Worn piston, piston ring or cylinder • Improper valve timing Service as necessary.
21	Inspect suction control valve. (See F5–83 SUCTION CONTROL VALVE INSPECTION) Is suction control valve okay?	Yes	Go to next step.
		No	Repair supply pump. (See F5–82 SUPPLY PUMP INSPECTION)
22	Inspect fuel injector. (See F5–85 FUEL INJECTOR INSPECTION) Is fuel injector okay?	Yes	Inspect following: • Boost sensor • MAF/IAT sensor • Fuel pressure sensor • Accelerator position sensor
		No	Repair or replace as necessary.
23	Verify test results. • If okay, return to diagnostic index to service any additional symptoms. • If malfunction remains, replace PCM. (See F5–94 PCM REMOVAL/INSTALLATION)		

NO.14 POOR FUEL ECONOMY

AME438018881W17

14	POOR FUEL ECONOMY
DESCRIPTION	• Fuel economy is unsatisfactory.
POSSIBLE CAUSE	• Incorrect adjustment of idle speed • A/C system improper operation • Air cleaner restriction • Engine cooling system malfunction • Poor fuel quality • Improper coolant level • Erratic signal from CKP sensor • Erratic signal from CMP sensor • Fuel pressure sensor or related circuit malfunction • ECT sensor or related circuit malfunction • Boost sensor or related circuit malfunction • Accelerator position sensor or related circuit malfunction • MAF/IAT sensor or related circuit malfunction • IAT sensor No .2 or related circuit malfunction • VSS or related circuit malfunction • Turbocharger malfunction • Charge air cooler malfunction • Improper engine compression • Improper valve timing • Exhaust system and/or catalyst converter clogging • Injection timing is incorrect • Fuel injector malfunction • Supply pump malfunction • Fuel leakage • Fuel line restriction • Fuel filter clogging • Brake dragging • EGR system malfunction • EGR water cooler malfunction • Vacuum leakage • Clutch slippage • Glow system malfunction • Variable boost control (VBC) system malfunction • Coolant heater system malfunction **Warning** **The following troubleshooting flow chart contains the fuel system diagnosis and repair procedures. Read the following warnings before performing the fuel system services:** • **Fuel vapor is hazardous. It can easily ignite, causing serious injury and damage. Always keep sparks and flames away from fuel.** • **Fuel line spills and leakage are dangerous. Fuel can ignite and cause serious injury or death and damage. Fuel can also irritate skin and eyes. To prevent this, always complete "BEFORE REPAIR PROCEDURE" and "AFTER REPAIR PROCEDURE" described in this manual.**

Diagnostic Procedure

STEP	INSPECTION	RESULTS	ACTION
1	Inspect for following: • Fuel quality (e.g.: including water contamination, winter/summer blend) • Fuel line/fuel filter clogging and/or restriction • Fuel line leakage • Intake-air system restriction • Exhaust system and/or catalyst converter restriction • Charge air cooler condition (restriction or damaged) • Vacuum leakage Are all items okay?	Yes	Go to next step.
		No	Service as necessary. Repeat Step 1.
2	Is brake system functioning properly?	Yes	Go to next step.
		No	Inspect for cause.

STEP	INSPECTION	RESULTS	ACTION
3	Perform self-test function using WDS or equivalent. Turn engine switch to ON. Retrieve any DTC. Is DTC displayed?	Yes	**DTC is displayed:** Go to appropriate DTC test. **Communication error message is displayed:** Inspect for following: • Open circuit between PCM control relay and PCM terminal 53 or 79 • Open circuit PCM control relay and PCM terminal 69 • PCM control relay stuck open • Open or poor GND circuit (PCM terminal 65, 85, 103 or 104) • Poor connection vehicle body GND
		No	**No DTC is displayed:** Go to next step.
4	**Note** • The following test should be performed on the vehicles with A/C system. If the following test cannot be performed due to engine stalling, go to next step. • Go to next step for the vehicle without A/C system. Connect pressure gauge to A/C line. Turn blower and A/C switches on. Is pressure within specifications?	Yes	Go to next step
		No	**A/C is always on:** Go to symptom troubleshooting “NO.24 A/C ALWAYS ON OR A/C COMPRESSOR RUNS CONTINUOUSLY”. **Other symptoms:** Inspect following: • Refrigerant charging amount • Main fan and/or additional fan operation.
5	Access ECT PID. Drive vehicle while monitoring PID. Is PID within specification?	Yes	Go to next step.
		No	Inspect for coolant leakage, cooling fan and condenser fan operations or thermostat operation.
6	Inspect idle speed. (See F5–64 IDLE SPEED INSPECTION) Is idle speed okay?	Yes	Go to next step.
		No	Go to symptom troubleshooting “NO.7 SLOW RETURN TO IDLE”.
7	Perform EGR system inspection. Is EGR system okay?	Yes	Go to next step.
		No	Repair or replace malfunctioning part according to EGR system operation results.
8	Inspect EGR water cooler for following: • Coolant passage clogging/restriction • Exhaust gas clogging/restriction Is EGR water cooler okay?	Yes	Go to next step.
		No	Service as necessary.
9	Is engine compression correct? (See B4–16 COMPRESSION INSPECTION)	Yes	Go to next step.
		No	Inspect for following: • Damaged valve seat • Worn valve stem and valve guide • Worn or stuck piston ring • Worn piston, piston ring or cylinder • Improper valve timing Service as necessary.

STEP	INSPECTION	RESULTS	ACTION
10	Inspect fuel injector. (See F5–85 FUEL INJECTOR INSPECTION) Is fuel injector okay?	Yes	Go to next step.
		No	Repair or replace as necessary.
11	Perform turbocharger inspection. (See F5–68 TURBOCHARGER INSPECTION) Is turbocharger okay?	Yes	Go to next step.
		No	Replace turbocharger.
12	Inspect guide blade valve operation. (See F5–253 ENGINE CONTROL SYSTEM OPERATION INSPECTION) Is there any problem?	Yes	Repair or replace as necessary.
		No	Go to next step.
13	Visually inspect CKP sensor and teeth of pulse wheel. Are CKP sensor and teeth of pulse wheel okay?	Yes	Go to next step.
		No	Replace malfunctioning parts.
14	Measure gap between CKP sensor and teeth of pulse wheel. **Specification** **1.5—2.5 mm {0.059—0.098 in}** Is gap within specification?	Yes	Go to next step.
		No	Adjust CKP sensor position.
15	Visually inspect CMP sensor and teeth of pulse wheel. Are CMP sensor and teeth of pulse wheel okay?	Yes	Inspect following PIDs: (See F5–95 PCM INSPECTION) • ECT • IAT • MAF • MAP • RPM • VSS If PID value is not as specified, repair or replace malfunctioning parts. If PID value is okay, go to next step.
		No	Replace malfunctioning parts.
16	Inspect timing belt for following: • Chipping of gear teeth • Low tension • Breakage damage or cracks Is timing belt okay?	Yes	Inspect following: • Clutch slippage • CKP sensor • Boost sensor and related circuit • Brake system for dragging • Coolant heater system • Glow system If okay, remove and inspect supply pump.
		No	If timing is incorrect, adjust valve timing. If timing belt is not okay, replace timing belt.
17	Verify test results. • If okay, return to diagnostic index to service any additional symptoms. • If malfunction remains, replace PCM. (See F5–94 PCM REMOVAL/INSTALLATION)		

End Of Sie

NO.15 EMISSION COMPLIANCE

AME438018881W18

15	EMISSION COMPLIANCE
DESCRIPTION	• Fails emissions test.
POSSIBLE CAUSE	• Poor fuel quality • Vacuum leakage • Air leakage from intake-air system • Intake-air system restriction • Variable swirl control (VSC) system malfunction • Variable boost control (VBC) system malfunction • Intake shutter valve stuck close • VSC valve stuck close • Turbocharger malfunction • Guide blade valve malfunction • Charge air cooler malfunction • Glow system malfunction • EGR system malfunction • EGR water cooler malfunction • Low coolant temperature • Engine overheating • Inadequate fuel pressure • Fuel pressure limiter malfunction (built-in common rail) • Suction control valve inspection (built-in supply pump) • ECT sensor or related circuit malfunction • MAF/IAT sensor related circuit malfunction • IAT sensor No.2 or related circuit malfunction • Fuel pressure sensor or related circuit malfunction • Incorrect adjustment accelerator position sensor and/or idle switch • Accelerator position sensor or related circuit malfunction • Fuel line restriction • Supply pump malfunction • Fuel injector malfunction • Incorrect fuel injection timing • Incorrect fuel idle speed • Erratic signal from CKP sensor • Erratic signal from CMP sensor • ECT sensor malfunction • Boost sensor or related circuit malfunction • MAF sensor malfunction • Neutral switch or related circuit malfunction • VSS or related circuit malfunction • Low engine compression • Improper valve timing • Exhaust system and/or catalyst converter restriction • Catalyst converter malfunction • IDM or related circuit malfunction **Warning** **The following troubleshooting flow chart contains the fuel system diagnosis and repair procedures. Read the following warnings before performing the fuel system services:** • **Fuel vapor is hazardous. It can easily ignite, causing serious injury and damage. Always keep sparks and flames away from fuel.** • **Fuel line spills and leakage are dangerous. Fuel can ignite and cause serious injury or death and damage. Fuel can also irritate skin and eyes. To prevent this, always complete "BEFORE REPAIR PROCEDURE" and "AFTER REPAIR PROCEDURE" described in this manual.**

Diagnostic Procedure

STEP	INSPECTION	RESULTS	ACTION
1	Is engine overheating?	Yes	Go to symptom troubleshooting "NO.17 COOLING SYSTEM CONCERNS—OVERHEATING".
		No	Go to next step.
2	Does engine run cold?	Yes	Go to symptom troubleshooting "NO.18 COOLING SYSTEM CONCERNS—RUNS COLD".
		No	Go to next step.

STEP	INSPECTION	RESULTS	ACTION
3	Connect WDS or equivalent to DLC-2. Perform self-test function using WDS or equivalent. Turn engine switch to ON. Retrieve any DTC. Is DTC displayed?	Yes	**DTC is displayed:** Go to appropriate DTC test. **Communication error message is displayed:** Inspect for following: • Open circuit between PCM control relay and PCM terminal 53 or 79 • Open circuit PCM control relay and PCM terminal 69 • PCM control relay stuck open • Open or poor GND circuit (PCM terminal 65, 85, 103 or 104) • Poor connection vehicle body GND
		No	**No DTC is displayed:** Go to next step.
4	Inspect for following: • Fuel quality (e.g.: including water contamination, winter/summer blend) • Fuel return line clogging and/or restriction • Charge air cooler condition (restriction or damaged) • Intake-air system restriction • Exhaust system and/or catalyst converter restriction • Vacuum leakage Are all items okay?	Yes	Go to next step.
		No	Service as necessary. Repeat Step 4.
5	Inspect adjustment of accelerator position sensor and idle switch. (See F5–102 ACCELERATOR POSITION SENSOR INSPECTION) (See F5–100 IDLE SWITCH INSPECTION) Are accelerator position sensor and idle switch adjusted correctly?	Yes	Go to next step.
		No	Adjust accelerator position sensor and idle switch correctly. (See F5–103 ACCELERATOR POSITION SENSOR ADJUSTMENT) (See F5–101 IDLE SWITCH ADJUSTMENT)
6	Inspect adjustment of neutral switch. (See F5–99 NEUTRAL SWITCH INSPECTION) Is neutral switch adjusted correctly?	Yes	Go to next step.
		No	Adjust neutral switch correctly.
7	Inspect intake shutter valve and VSC valve operations. (See F5–253 ENGINE CONTROL SYSTEM OPERATION INSPECTION) Is there any problem?	Yes	Repair or replace as necessary.
		No	Go to next step.
8	Inspect guide blade valve operation. (See F5–253 ENGINE CONTROL SYSTEM OPERATION INSPECTION) Is there any problem?	Yes	Repair or replace as necessary.
		No	Go to next step.
9	Inspect hose bands between following parts: • Turbocharger compressor housing and air cleaner • Turbocharger compressor housing and charge air cooler Are hose bands loose?	Yes	Retighten hose bands. If concern is resolved, complete inspection. If concern still exists, go to next step.
		No	Go to next step.
10	Inspect for improper operation, kinks, clogging or disconnection on guide blade actuator. (See F5–253 ENGINE CONTROL SYSTEM OPERATION INSPECTION) Is actuator okay?	Yes	Go to next step.
		No	Repair or replace as necessary. If concern is resolved, complete inspection. If concern still exists, turbocharger is okay. Go to next step.
11	Remove parts necessary to inspect turbocharger. Do not remove turbocharger. Inspect if turbocharger compressor wheel is bent, damaged, or interfering with housing on vehicle. (See F5–68 TURBOCHARGER INSPECTION) Is there any problem?	Yes	Replace turbocharger.
		No	Go to next step.
12	Inspect if turbocharger compressor wheel locknut is loose or has fallen down inside turbocharger. Is there any problem?	Yes	Replace turbocharger.
		No	Go to next step.

STEP	INSPECTION	RESULTS	ACTION
13	Inspect turbocharger compressor wheel by hand. Does wheel turn easily and smoothly?	Yes	Go to next step.
		No	Replace turbocharger.
14	Inspect if turbocharger turbine wheel is damaged, cracked or interfering with housing on vehicle. **Note** • Inspect all fins on each turbine wheel. Is there any problem?	Yes	Replace turbocharger.
		No	Go to next step.
15	Is any engine oil found inside turbocharger turbine housing?	Yes	**Excessive amount of oil is found:** Replace turbocharger. **Small amount of oil is found:** Wipe oil off of vehicle, then go to next step.
		No	Go to next step.
16	Is any engine oil found inside turbocharger compressor hosing?	Yes	Wipe oil off of vehicle and install all removed parts in Step 10. Then, go to next step.
		No	Turbocharger is okay. Install all parts removed in Step10. Then, go to next step.
17	Perform EGR system inspection. Is EGR system okay?	Yes	Go to next step.
		No	Repair or replace malfunctioning part according to EGR system operation results.
18	Inspect EGR water cooler for following: • Coolant passage clogging/restriction • Exhaust gas clogging/restriction Is EGR water cooler okay?	Yes	Go to next step.
		No	Service as necessary.
19	Inspect glow system operation. (See T–28 RELAY INSPECTION) Is glow system operation normal?	Yes	Go to next step.
		No	Repair or replace malfunctioning part according to glow system operation results.
20	Visually inspect CKP sensor and teeth of pulse wheel. Are CKP sensor and teeth of pulse wheel okay?	Yes	Go to next step.
		No	Replace malfunctioning parts.
21	Measure gap between CKP sensor and teeth of pulse wheel. **Specification** **1.5—2.5 mm {0.059—0.098 in}** Is gap within specification?	Yes	Go to next step.
		No	Adjust CKP sensor position.
22	Visually inspect CMP sensor and teeth of pulse wheel. Are CMP sensor and teeth of pulse wheel okay?	Yes	Inspect following PIDs: (See F5–95 PCM INSPECTION) • ECT • IAT • MAF • MAP • RPM • VSS If PID value is not as specified, repair or replace malfunctioning parts. If PID value is okay, go to next step.
		No	Replace malfunctioning parts.
23	Inspect fuel pressure sensor. (See F5–109 FUEL PRESSURE SENSOR INSPECTION) Is fuel pressure okay?	Yes	Go to next step.
		No	Replace common rail.
24	Inspect suction control valve. (See F5–83 SUCTION CONTROL VALVE INSPECTION) Is suction control valve okay?	Yes	Go to next step.
		No	Repair supply pump. (See F5–82 SUPPLY PUMP INSPECTION)

STEP	INSPECTION	RESULTS	ACTION
25	Is engine compression correct? (See B4–16 COMPRESSION INSPECTION)	Yes	Go to next step.
		No	Inspect for following: • Damaged valve seat • Worn valve stem and valve guide • Worn or stuck piston ring • Worn piston, piston ring or cylinder • Improper valve timing Service as necessary.
26	Inspect fuel injector. (See F5–85 FUEL INJECTOR INSPECTION) Is fuel injector okay?	Yes	Go to next step.
		No	Repair or replace as necessary.
27	Inspect timing belt for followings: • Chipping of gear teeth • Low tension • Breakage damage or cracks Is timing belt okay?	Yes	Inspect following: • ECT sensor • Boost sensor • MAF/IAT sensor • Catalyst converter If okay, remove and inspect supply pump and common rail.
		No	If timing is incorrect, adjust valve timing. If timing belt is not okay, replace timing belt.
28	Verify test results. • If okay, return to diagnostic index to service any additional symptoms. • If malfunction remains, replace PCM. (See F5–94 PCM REMOVAL/INSTALLATION)		

End Of Sta

NO.16 HIGH OIL CONSUMPTION/LEAKAGE

AME438018881W19

16	HIGH OIL CONSUMPTION/LEAKAGE
DESCRIPTION	• Oil consumption is excessive.
POSSIBLE CAUSE	• Improper engine oil • Improper dipstick • Improper engine oil viscosity • Engine internal parts malfunction • Oil leakage • Turbocharger malfunction

Diagnostic Procedure

STEP	INSPECTION	RESULTS	ACTION
1	Verify followings: • Proper dipstick • Proper engine viscosity • Engine oil level Are all items okay?	Yes	Go to next step.
		No	Service as necessary. Repeat Step 1.
2	Remove to necessary to inspect turbocharger. **Note** • Do not remove turbocharger. Inspect if turbocharger compressor wheel is bent, damaged, or interfering with housing on vehicle. Is there any problem?	Yes	Replace turbocharger.
		No	Go to next step.
3	Inspect if turbocharger compressor wheel locknut is loose or has fallen down inside turbocharger. Is there any problem?	Yes	Replace turbocharger.
		No	Go to next step.
4	Turn turbocharger compressor wheel by hand. Does wheel turn easily and smoothly?	Yes	Go to next step.
		No	Replace turbocharger.
5	Inspect if turbocharger turbine wheel is damaged, cracked or interfering with housing on vehicle. **Note** • Inspect all fins on each turbine wheel. Is there any problem?	Yes	Replace turbocharger.
		No	Go to next step.

STEP	INSPECTION	RESULTS	ACTION
6	Is any engine oil found inside turbocharger turbine housing?	Yes	**Excessive amount of oil is found:** Replace turbocharger. **Small amount of oil is found:** Wipe oil off of vehicle, then go to next step.
		No	Go to next step.
7	Is any engine oil found inside turbocharger compressor housing?	Yes	Wipe oil off of vehicle, then go to next step.
		No	Go to next step.
8	Is any engine oil found around oil pipes attached on turbocharger center housing?	Yes	If oil leaks from damaged pipe, replace oil pipe. Then, go to next step.
		No	Go to next step.
9	Is any engine oil found inside air intake pipes or hoses?	Yes	Wipe engine oil off.
		No	Turbocharger is okay. Install all parts removed in Step 2. Then go to next step.
10	Is engine compression correct? (See B4–16 COMPRESSION INSPECTION)	Yes	Inspect oil leakage from outside of engine.
		No	Inspect for following: • Damaged valve seat • Worn valve stem and valve guide • Worn or stuck piston ring • Worn piston, piston ring or cylinder Service as necessary.
11	Verify test results. • If okay, return to diagnostic index to service any additional symptoms. • If malfunction remains, replace PCM. (See F5–94 PCM REMOVAL/INSTALLATION)		

End Of Sie

NO.17 COOLING SYSTEM CONCERNS-OVERHEATING

AME438018881W20

17	COOLING SYSTEM CONCERNS-OVERHEATING
DESCRIPTION	• Engine runs at higher than normal temperature/overheats.
POSSIBLE CAUSE	• Main fan malfunction • Additional fan malfunction • Low drive belt tension • Drive belt damage • Improper coolant level • Thermostat malfunction • Radiator clogging • Improper water/anti-freeze mixture • Improper or damaged radiator cap • Radiator hose damage • Coolant leakage (engine internal, turbocharger, external) • A/C system malfunction • EGR system malfunction • EGR water cooler malfunction • Coolant heater system malfunction

Diagnostic Procedure

STEP	INSPECTION	RESULTS	ACTION
1	Inspect following: • Engine coolant level • Coolant leakage (around heater unit in passenger compartment, coolant hoses and/or radiator, and around coolant heater unit.) • Water and anti-freeze mixture • Radiator condition • Collapsed or restricted radiator hoses • Radiator pressure cap • Drive belt tension • Drive belt • Fan rotational direction Are all items okay?	Yes	Go to next step.
		No	Service as necessary. Repeat Step 1.

STEP	INSPECTION	RESULTS	ACTION
2	Perform self-test function using WDS or equivalent. Turn engine switch to ON. Retrieve any DTC. Is DTC displayed?	Yes	**DTC is displayed:** Go to appropriate DTC test. **Communication error message is displayed:** Inspect for following: • Open circuit between PCM control relay and PCM terminal 53 or 79 • Open circuit PCM control relay and PCM terminal 69 • PCM control relay stuck open • Open or poor GND circuit (PCM terminal 65, 85, 103 or 104) • Poor connection vehicle body GND
		No	**No DTC is displayed:** Go to next step.
3	**Note** • The following test should be performed on the vehicles with A/C system. Go to next step for vehicles without A/C system Start engine and run it at idle speed. Turn A/C switch off. Does A/C compressor disengaged?	Yes	Go to next step.
		No	Go to symptom troubleshooting “NO.24 A/C ALWAYS ON OR A/C COMPRESSOR RUNS CONTINUOUSLY”.
4	Start engine and run it at idle speed. Turn A/C switch on if equipped. Do compressor fan and/or cooling fan operate?	Yes	Go to next step.
		No	**Additional fan does not operate:** Inspect for following: • Additional fan relay is stuck open • Additional fan motor malfunction • Additional fan motor GND open • Open circuit between additional fan motor and relay • Open circuit between additional fan relay and PCM terminal 102 • Open battery power circuit of condenser fan relay **Main fan motor does not operate:** Inspect for following: • Main fan relay is stuck open • Main fan motor malfunction • Main fan motor GND open • Open circuit between main fan motor and relay • Open circuit between main fan relay and PCM terminal 76 • Open battery power circuit of main fan relay
5	Is drive belt okay?	Yes	Go to next step.
		No	Replace drive belt.
6	Perform EGR system inspection. Is EGR system okay?	Yes	Go to next step.
		No	Repair or replace malfunctioning part according to EGR system operation results.
7	Inspect EGR water cooler for followings: • Coolant passage clogging/restriction • Exhaust gas clogging/restriction Is EGR water cooler okay?	Yes	Go to next step.
		No	Service as necessary.
8	Perform coolant heater system inspection. (See E–17 THERMOSTAT INSPECTION) Is coolant heater system okay?	Yes	Go to next step.
		No	Repair or replace malfunctioning part according to coolant heater system operation results.
9	Cool down engine. Remove thermostat and inspect operation. Is thermostat okay?	Yes	Thermostat is okay. Inspect cylinder block for leakage or blockage.
		No	Replace thermostat.
10	Verify test results. • If okay, return to diagnostic index to service any additional symptoms. • If malfunction remains, replace PCM. (See F5–94 PCM REMOVAL/INSTALLATION)		

End Of Ste

F5

NO.18 COOLING SYSTEM CONCERNS-RUNS COLD

AME438018881W21

18	COOLING SYSTEM CONCERNS-RUNS COLD
DESCRIPTION	• Engine takes excessive period for reaching normal operating temperature.
POSSIBLE CAUSE	• Thermostat malfunction • Main fan system malfunction • Additional fan system malfunction • Coolant heater system malfunction

Diagnostic Procedure

STEP	INSPECTION	RESULTS	ACTION
1	Is customer complaint “Lack of passenger compartment heat”?	Yes	Inspect A/C heater system.
		No	Go to next step.
2	Does engine speed continue at fast idle?	Yes	Go to symptom troubleshooting “NO.7 SLOW RETURN TO IDLE”.
		No	Go to next step.
3	Connect WDS or equivalent to DLC-2. Access ECT PID. Inspect for both ECT PID and temperature gauge on instrument cluster readings. Is ECT PID same as temperature gauge reading?	Yes	Go to next step.
		No	If temperature gauge on instrument cluster indicates normal range but ECT PID is not same as temperature gauge reading, inspect ECT sensor. If temperature gauge on instrument cluster indicates cold range but ECT PID is normal, inspect temperature gauge and heat gauge unit.
4	Remove thermostat and inspect operation. (See E–16 THERMOSTAT REMOVAL/INSTALLATION) (See E–17 THERMOSTAT INSPECTION) Is thermostat okay?	Yes	Go to next step.
		No	Replace thermostat.
5	Inspect main fan and additional fan operations. If both or either fan operate normally, inspect for following: • Main fan relay is stuck closed • Additional fan relay is stuck closed • Short to GND between main fan relay and PCM terminal 76 • Circuit between main fan relay and fan motor short to battery supply line • Additional fan relay is stuck closed • Short to GND between additional fan relay and PCM terminal 102 • Circuit between additional fan relay and fan motor short to battery supply line • Short to GND between A/C switch and PCM terminal 84 Are all circuits okay?	Yes	Perform coolant heater system inspection. Repair or replace malfunctioning part according to coolant heater system operation results.
		No	Repair or replace as necessary.
6	Verify test results. • If okay, return to diagnostic index to service any additional symptoms. • If malfunction remains, replace PCM. (See F5–94 PCM REMOVAL/INSTALLATION)		

End Of Ste

NO.19 EXCESSIVE BLACK SMOKE

AME438018881W22

19	EXCESSIVE BLACK SMOKE
DESCRIPTION	• Excessive black smoke is observed in exhaust gas.
POSSIBLE CAUSE	• Air cleaner element restriction • Incorrect fuel injection timing • Erratic signal from CKP sensor • Erratic signal from CMP sensor • Fuel pressure sensor or related circuit malfunction • ECT sensor or related circuit malfunction • Boost sensor or related circuit malfunction • Accelerator position sensor or related circuit malfunction • MAF/IAT sensor or related circuit malfunction • IAT sensor No.2 or related circuit malfunction • Fuel injector malfunction • Excessive fuel pressure • Suction control valve malfunction (built-in supply pump) • Fuel line restriction • Fuel pressure limiter malfunction (built-in common rail) • Low engine compression • Improper valve timing • EGR system malfunction • EGR water cooler malfunction • Vacuum leakage • Intake shutter valve malfunction • VSC valve malfunction **Warning** **The following troubleshooting flow chart contains the fuel system diagnosis and repair procedures. Read the following warnings before performing the fuel system services:** • **Fuel vapor is hazardous. It can easily ignite, causing serious injury and damage. Always keep sparks and flames away from fuel.** • **Fuel line spills and leakage are dangerous. Fuel can ignite and cause serious injury or death and damage. Fuel can also irritate skin and eyes. To prevent this, always complete "BEFORE REPAIR PROCEDURE" and "AFTER REPAIR PROCEDURE" described in this manual.**

F5

Diagnostic Procedure

STEP	INSPECTION	RESULTS	ACTION
1	Perform self-test function using WDS or equivalent. Turn engine switch to ON. Retrieve any DTC. Is DTC displayed?	Yes	**DTC is displayed:** Go to appropriate DTC test. **Communication error message is displayed:** Inspect for following: • Open circuit between PCM control relay and PCM terminal 53 or 79 • Open circuit PCM control relay and PCM terminal 69 • PCM control relay stuck open • Open or poor GND circuit (PCM terminal 65, 85, 103 or 104) • Poor connection vehicle body GND
		No	**No DTC is displayed:** Go to next step.
2	Does any other symptom exist?	Yes	Go to appropriate flowchart.
		No	Go to next step.
3	Inspect for air cleaner element for clogging. Is air cleaner element okay?	Yes	Go to next step.
		No	Repair or replace air cleaner element.
4	Inspect intake shutter valve and VSC valve operations. (See F5–253 ENGINE CONTROL SYSTEM OPERATION INSPECTION) Is there any problem?	Yes	Repair or replace as necessary.
		No	Go to next step.
5	Visually inspect CKP sensor and teeth of pulse wheel. Are CKP sensor and teeth of pulse wheel okay?	Yes	Go to next step.
		No	Replace malfunctioning parts.

STEP	INSPECTION	RESULTS	ACTION
6	Measure gap between CKP sensor and teeth of pulse wheel. **Specification** **1.5—2.5 mm {0.059—0.098 in}** Is gap within specification?	Yes	Go to next step.
		No	Adjust CKP sensor position.
7	Visually inspect CMP sensor and teeth of pulse wheel. Are CMP sensor and teeth of pulse wheel okay?	Yes	Inspect following PIDs: (See F5–95 PCM INSPECTION) • ECT • IAT • MAF • MAP • RPM If PID value is not as specified, repair or replace malfunctioning parts. If PID value is okay, go to next step.
		No	Replace malfunctioning parts.
8	Perform EGR system inspection. Is EGR system okay?	Yes	Go to next step.
		No	Repair or replace malfunctioning part according to EGR system operation results.
9	Inspect EGR water cooler for following: • Coolant passage clogging/restriction • Exhaust gas clogging/restriction Is EGR water cooler okay?	Yes	Go to next step.
		No	Service as necessary.
10	Inspect VSC system operation. Does VSC system operate properly?	Yes	Go to next step.
		No	Repair or replace malfunctioning part according to VSC system operation inspection results.
11	Inspect suction control valve. (See F5–83 SUCTION CONTROL VALVE INSPECTION) Is suction control valve okay?	Yes	Go to next step.
		No	Repair supply pump. (See F5–82 SUPPLY PUMP INSPECTION)
12	Is engine compression correct? (See B4–16 COMPRESSION INSPECTION)	Yes	Go to next step.
		No	Inspect for following: • Damaged valve seat • Worn valve stem and valve guide • Worn or stuck piston ring • Worn piston, piston ring or cylinder • Improper valve timing Service as necessary.
13	Inspect fuel injector. (See F5–85 FUEL INJECTOR INSPECTION) Is fuel injector okay?	Yes	Inspect following: • Boost sensor • Fuel pressure limiter (built-in common rail) • Fuel pressure sensor • Fuel return line restriction Service as necessary.
		No	Repair or replace as necessary.
14	Verify test results. • If okay, return to diagnostic index to service any additional symptoms. • If malfunction remains, replace PCM. (See F5–94 PCM REMOVAL/INSTALLATION)		

End Of Sie

NO.20 FUEL ODOR (IN ENGINE COMPARTMENT)

AME438018881W23

20	FUEL ODOR (IN ENGINE COMPARTMENT)
DESCRIPTION	• Fuel smell or visible leakage.
POSSIBLE CAUSE	• Excessive fuel pressure • Fuel pressure limiter malfunction (built-in common rail) • Fuel leakage **Warning** **The following troubleshooting flow chart contains the fuel system diagnosis and repair procedures. Read the following warnings before performing the fuel system services:** • **Fuel vapor is hazardous. It can easily ignite, causing serious injury and damage. Always keep sparks and flames away from fuel.** • **Fuel line spills and leakage are dangerous. Fuel can ignite and cause serious injury or death and damage. Fuel can also irritate skin and eyes. To prevent this, always complete "BEFORE REPAIR PROCEDURE" and "AFTER REPAIR PROCEDURE" described in this manual.**

Diagnostic Procedure

STEP	INSPECTION	RESULTS	ACTION
1	Visually inspect fuel leakage at fuel injector and fuel line. Is there any fuel leakage?	Yes	Service as necessary.
		No	Go to next step.
2	Visually inspect for damaged or cracked fuel filter. Is fuel filter okay?	Yes	Go to next step.
		No	Replace fuel filter.
3	Inspect fuel injector. (See F5–85 FUEL INJECTOR INSPECTION) Is fuel injector okay?	Yes	Go to next step.
		No	Repair or replace as necessary.
4	Perform self-test function using WDS or equivalent. Turn engine switch to ON. Retrieve any DTC. Is DTC displayed?	Yes	**DTC is displayed:** Go to appropriate DTC test. **Communication error message is displayed:** Inspect for following: • Open circuit between PCM control relay and PCM terminal 53 or 79 • Open circuit PCM control relay and PCM terminal 69 • PCM control relay stuck open • Open or poor GND circuit (PCM terminal 65, 85, 103 or 104) • Poor connection vehicle body GND
		No	**No DTC is displayed:** Remove and inspect common rail.
5	Verify test results. • If okay, return to diagnostic index to service any additional symptoms. • If malfunction remains, replace PCM. (See F5–94 PCM REMOVAL/INSTALLATION)		

End Of Sto

F5

NO.21 ENGINE NOISE

AME438018881W24

21	ENGINE NOISE
DESCRIPTION	• Engine noise under hood.
POSSIBLE CAUSE	• Engine internal damage • Timing belt displacement • Fuel injector malfunction • Loose attaching bolts or worn parts • Improper drive belt tension • Air leakage from intake-air system • Turbocharger operating noise • Solenoid valve operating noise • Improper injection timing • Erratic signal from CKP sensor • Erratic signal from CMP sensor • Fuel pressure sensor or related circuit malfunction • Boost sensor or related circuit malfunction • Accelerator position sensor or related circuit malfunction • MAF/IAT sensor or related circuit malfunction • ECT sensor or related circuit malfunction • EGR system or malfunction • IAT sensor No.2 or related circuit malfunction • Vacuum leakage • Air leakage from intake-air system • Air in power steering fluid line **Warning** **The following troubleshooting flow chart contains the fuel system diagnosis and repair procedures. Read the following warnings before performing the fuel system services:** • **Fuel vapor is hazardous. It can easily ignite, causing serious injury and damage. Always keep sparks and flames away from fuel.** • **Fuel line spills and leakage are dangerous. Fuel can ignite and cause serious injury or death and damage. Fuel can also irritate skin and eyes. To prevent this, always complete "BEFORE REPAIR PROCEDURE" and "AFTER REPAIR PROCEDURE" described in this manual.** **Note** • PCM checks fuel injection amount during a set interval while idling, and automatically corrects it to maintain engine efficiency. It is normal that engine noise and vibration might be a little louder during this process.

Diagnostic Procedure

STEP	INSPECTION	RESULTS	ACTION
1	Is squeal, click or chirp sound present?	Yes	Inspect engine oil level, solenoid valves installation or drive belt.
		No	Go to next step.
2	Is rumble or grind sound present?	Yes	Inspect drive belt tension or power steering system fluid level. If okay, perform power steering fluid line air bleed.
		No	Go to next step.
3	Is rattle sound present?	Yes	Inspect location of rattle for loose parts.
		No	Go to next step.
4	Is hiss sound present?	Yes	Inspect for vacuum leakage and intake-air system leakage.
		No	Go to next step.
5	Is rap or roar sound present?	Yes	Inspect exhaust system or loose parts.
		No	Go to next step.

STEP	INSPECTION	RESULTS	ACTION
6	Perform self-test function using WDS or equivalent. Turn engine switch to ON. Retrieve any DTC. Is DTC displayed?	Yes	**DTC is displayed:** Go to appropriate DTC test. **Communication error message is displayed:** Inspect for following: • Open circuit between PCM control relay and PCM terminal 53 or 79 • Open circuit PCM control relay and PCM terminal 69 • PCM control relay stuck open • Open or poor GND circuit (PCM terminal 65, 85, 103 or 104) • Poor connection vehicle body GND
		No	**No DTC is displayed:** Go to appropriate DTC test.
7	Access ECT PID. Inspect ECT PID while warming up engine. Is PID value correct?	Yes	Go to next step.
		No	Inspect ECT sensor and related wiring harnesses.
8	Access IAT PID. Inspect IAT PID while running engine. Is PID value correct?	Yes	Go to next step.
		No	Inspect IAT sensor and related wiring harnesses.
9	Visually inspect CKP sensor and teeth of pulse wheel. Are CKP sensor and teeth of pulse wheel okay?	Yes	Go to next step.
		No	Replace malfunctioning parts.
10	Measure gap between CKP sensor and teeth of pulse wheel. **Specification** **1.5—2.5 mm {0.059—0.098 in}** Is gap within specification?	Yes	Go to next step.
		No	Adjust CKP sensor position.
11	Visually inspect CMP sensor and teeth of pulse wheel. Are CMP sensor and teeth of pulse wheel okay?	Yes	Inspect following PIDs: (See F5–95 PCM INSPECTION) • ECT • IAT • MAF • MAP • RPM If PID value is not as specified, repair or replace malfunctioning parts. If PID value is okay, go to next step.
		No	Replace malfunctioning parts.
12	Perform EGR system inspection. Is EGR system okay?	Yes	Go to next step.
		No	Repair or replace malfunctioning part according to EGR system operation results.
13	Remove parts necessary to inspect turbocharger. **Note** • Do not remove turbocharger. Inspect if turbocharger compressor wheel is bent, damaged, or interfering with housing on vehicle. Is there any problem?	Yes	Replace turbocharger.
		No	Go to next step.
14	Inspect if turbocharger compressor wheel locknut is loose or has fallen down inside turbocharger. Is there any problem?	Yes	Replace turbocharger.
		No	Go to next step.
15	Turn turbocharger compressor wheel by hand. Does wheel turn easily and smoothly?	Yes	Go to next step.
		No	Replace turbocharger.
16	Inspect if turbocharger turbine wheel is damaged, cracked or interfering with housing on vehicle. **Note** • Inspect all fins on each turbine wheel. Is there any problem?	Yes	Replace turbocharger.
		No	Go to next step.

F5

STEP	INSPECTION	RESULTS	ACTION
17	Is any engine oil found inside turbocharger turbine housing?	Yes	**Excessive amount of oil is found:** Replace turbocharger. **Small amount of oil is found:** Wipe oil off of vehicle, then go to next step.
		No	Go to next step.
18	Is any engine oil found inside turbocharger compressor housing?	Yes	Wipe oil off of vehicle, then go to next step.
		No	Go to next step.
19	Is any exhaust gas leakage found around location where turbocharger is attached to exhaust manifold?	Yes	Remove turbocharger. Inspect for cracks on center housing inlet surface. If cracks are found, replace turbocharger.
		No	Go to next step.
20	Are any center housing and turbine housing attaching bolts loose?	Yes	Retighten loose bolts. If a bolt is found to be missing, attach appropriate new bolts.
		No	Turbocharger is okay. Install all parts removed in Step 13. Go to next step.
21	Inspect fuel injector and fuel injector gasket. (See F5–85 FUEL INJECTOR INSPECTION) Is fuel injector okay?	Yes	Inspect for following: • Metal flow • Bent connecting rod • Damaged valve seat • Incorrect valve clearance
		No	Repair or replace as necessary.
22	Verify test results. • If okay, return to diagnostic index to service any additional symptoms. • If malfunction remains, replace PCM. (See F5–94 PCM REMOVAL/INSTALLATION)		

End Of Sie

NO.22 VIBRATION CONCERNS (ENGINE)

AME438018881W25

22	VIBRATION CONCERNS (ENGINE)
DESCRIPTION	• Vibration from under hood or driveline.
POSSIBLE CAUSE	• Loose attaching bolts or worn parts • Components malfunction such as worn parts • Erratic signal from CKP sensor • Erratic signal from CMP sensor • ECT sensor or related circuit malfunction • Accelerator position sensor or related circuit malfunction • MAF/IAT sensor or related circuit malfunction • Idle switch or related circuit malfunction • Incorrect adjustment of accelerator position sensor and/or idle switch • Fuel injector malfunction • Vacuum leakage **Warning** **The following troubleshooting flow chart contains the fuel system diagnosis and repair procedures. Read the following warnings before performing the fuel system services:** • **Fuel vapor is hazardous. It can easily ignite, causing serious injury and damage. Always keep sparks and flames away from fuel.** • **Fuel line spills and leakage are dangerous. Fuel can ignite and cause serious injury or death and damage. Fuel can also irritate skin and eyes. To prevent this, always complete "BEFORE REPAIR PROCEDURE" and "AFTER REPAIR PROCEDURE" described in this manual.**

Diagnostic Procedure

STEP	INSPECTION	RESULTS	ACTION
1	Inspect following components for loose attaching bolts or worn parts: • Main fan • Additional fan • Drive belt and pulley • Engine mounts • Exhaust system Are all items okay?	Yes	Go to next step.
		No	Readjust or retighten engine mount installation position. Service as necessary for other parts.

STEP	INSPECTION	RESULTS	ACTION
2	Inspect vacuum leakage. Are vacuum hoses okay?	Yes	Go to next step.
		No	Service as necessary. Repeat Step 2.
3	Connect WDS or equivalent to DLC-2. Turn engine switch to ON. Retrieve any DTC. Is DTC displayed?	Yes	**DTC is displayed:** Go to appropriate DTC test. **Communication error message is displayed:** Inspect followings: • Open circuit between PCM control relay and PCM terminal 53 or 79 • Open circuit PCM control relay and PCM terminal 69 • PCM control relay stuck open • Open or poor GND circuit (PCM terminal 65, 85, 103 or 104) • Poor connection vehicle body GND
		No	**No DTC is displayed:** Go to next step.
4	Visually inspect CKP sensor and teeth of pulse wheel. Are CKP sensor and teeth of pulse wheel okay?	Yes	Go to next step.
		No	Replace malfunctioning parts.
5	Measure gap between CKP sensor and teeth of pulse wheel. **Specification** **1.5—2.5 mm {0.059—0.098 in}** Is gap within specification?	Yes	Go to next step.
		No	Adjust CKP sensor position.
6	Inspect adjustment of accelerator position sensor and idle switch. (See F5–102 ACCELERATOR POSITION SENSOR INSPECTION) (See F5–100 IDLE SWITCH INSPECTION) Are accelerator position sensor and idle switch adjusted correctly?	Yes	Go to next step.
		No	Adjust accelerator position sensor and idle switch correctly. (See F5–103 ACCELERATOR POSITION SENSOR ADJUSTMENT) (See F5–101 IDLE SWITCH ADJUSTMENT)
7	Inspect adjustment of neutral switch. (See F5–99 NEUTRAL SWITCH INSPECTION) Is neutral switch adjusted correctly?	Yes	Go to next step.
		No	Adjust neutral switch correctly.
8	Visually inspect CMP sensor and teeth of pulse wheel. Are CMP sensor and teeth of pulse wheel okay?	Yes	Inspect following PIDs: (See F5–95 PCM INSPECTION) • ECT • IAT • MAF • RPM If PID value is not as specified, repair or replace malfunctioning parts. If PID value is okay, go to next step.
		No	Replace malfunctioning parts.
9	Inspect fuel injector. (See F5–85 FUEL INJECTOR INSPECTION) Is fuel injector okay?	Yes	Inspect following systems: • Wheels • Transmission and mounts • Driveline • Suspension Service as necessary.
		No	Repair or replace as necessary.
10	Verify test results. • If okay, return to diagnostic index to service any additional symptoms. • If malfunction remains, replace PCM. (See F5–94 PCM REMOVAL/INSTALLATION)		

End Of Sie

F5

NO.23 A/C DOES NOT WORK SUFFICIENTLY

AME438018881W26

23	A/C DOES NOT WORK SUFFICIENTLY
DESCRIPTION	• A/C compressor magnetic clutch does not engage when A/C switch is turned on.
POSSIBLE CAUSE	• Improper refrigerant charge amount • Open A/C switch magnetic clutch • Open circuit between A/C relay and A/C magnetic clutch • Poor GND of A/C magnetic clutch • Improper A/C magnetic clutch clearance • Refrigerant pressure switch is stuck open • A/C relay is stuck open • Improper A/C cut-off control • Open circuit between A/C switch and PCM through both refrigerant pressure switch and A/C amplifier

Diagnostic Procedure

STEP	INSPECTION	RESULTS	ACTION
1	Perform self-test function using WDS or equivalent. Turn engine switch to ON. Retrieve any DTC. Is DTC displayed?	Yes	**DTC is displayed:** Go to appropriate DTC test. **Communication error message is displayed:** Inspect for following: • Open circuit between PCM control relay and PCM terminal 53 or 79 • Open circuit PCM control relay and PCM terminal 69 • PCM control relay stuck open • Open or poor GND circuit (PCM terminal 65, 85, 103 or 104) • Poor connection vehicle body GND
		Yes	**No DTC is displayed:** Go to appropriate DTC test.
2	Disconnect A/C compressor connector. Start engine and turn A/C switch to ON. Is there correct voltage at terminal of A/C compressor magnetic clutch connector? **Specification** **More than 10.5 V**	Yes	Inspect for GND condition of magnetic clutch on A/C compressor. If GND condition is okay, inspect magnetic clutch coil for open circuit.
		No	Go to next step.
3	Disconnect refrigerant pressure switch connector. Connect jumper wire between terminals of refrigerant pressure switch connector. Turn engine switch to ON. Turn A/C switch on and set blower fan at any speed. Measure PCM terminal 84 voltage. Is voltage **below 1.0 V**?	Yes	Inspect refrigerant pressure switch operation. If switch is okay, go to next step.
		No	Inspect for following: • A/C switch is stuck open • Open circuit between refrigerant pressure switch and PCM terminal 84 • Open circuit of blower motor fan switch and resistor (if blower motor does not operate) • Evaporator temperature sensor and A/C amplifier
4	Inspect A/C cut-off operation. Does A/C cut-off work properly?	Yes	Go to next step.
		No	Repair or replace malfunctioning part according to A/C cut-off system inspection results.
5	Remove jumper wire from switch connector. Reconnect connector to refrigerant pressure switch. Start engine and turn A/C switch on. Does fan operate?	Yes	Inspect for stuck open A/C relay. Replace if necessary.
		No	Inspect following and repair or replace as necessary: • Refrigerant charging amount • Seized A/C compressor
6	Verify test results. • If okay, return to diagnostic index to service any additional symptoms. • If malfunction remains, replace PCM. (See F5–94 PCM REMOVAL/INSTALLATION)		

End Of Sie

NO.24 A/C ALWAYS ON OR A/C COMPRESSOR RUNS CONTINUOUSLY

AME438018881W27

24	A/C ALWAYS ON OR A/C COMPRESSOR RUNS CONTINUOUSLY
DESCRIPTION	• A/C compressor magnetic clutch does not disengage.
POSSIBLE CAUSE	• A/C compressor magnetic clutch stuck engagement • A/C relay is stuck closed • Improper A/C compressor magnetic clutch clearance • Short to GND circuit between A/C switch and PCM • Short to GND circuit between A/C relay and PCM • A/C relay to magnetic clutch circuit shorts to battery power

Diagnostic Procedure

STEP	INSPECTION	RESULTS	ACTION
1	Perform self-test function using WDS or equivalent. Turn engine switch to ON. Retrieve any DTC. Is DTC displayed?	Yes	**DTC is displayed:** Go to appropriate DTC test. **Communication error message is displayed:** Inspect for following: • Open circuit between PCM control relay and PCM terminal 53 or 79 • Open circuit PCM control relay and PCM terminal 69 • PCM control relay stuck open • Open or poor GND circuit (PCM terminal 65, 85, 103 or 104) • Poor connection vehicle body GND
		No	**No DTC is displayed:** Go to appropriate DTC test.
2	Start engine and run it at idle. Turn A/C switch on. Remove A/C relay. Does A/C magnetic clutch disengage?	Yes	Inspect for followings: • A/C relay is stuck closed • Short to GND circuit between A/C relay and PCM terminal 73 If both items are okay, go to next step.
		No	Inspect if circuit between A/C relay and magnetic clutch shorts to battery power circuit. If circuit is okay, inspect magnetic clutch stuck engagement or clearance.
3	Start engine and turn A/C switch on. Measure PCM terminal 84 voltage while disconnecting refrigerant pressure switch connector. **Note** • PCM terminal 84 voltage should read B+ when disconnecting connector. If PCM terminal 84 voltage reading remains below 1.0 V, short to GND circuit may be present. Is voltage **B+**?	Yes	Inspect for short to GND circuit between refrigerant pressure switch and PCM terminal 84.
		No	Go to next step.
4	Reconnect refrigerant pressure switch connector.Measure PCM terminal 84 voltage while turning off A/C switch. **Note** • PCM terminal 84 voltage should read B+ when turning A/C switch off. If PCM terminal 84 voltage reading remains below 1.0 V, short to GND circuit maybe present. Does voltage remain **B+**?	Yes	Inspect for followings: • Short to GND circuit between A/C switch and A/C amplifier. • Short to GND circuit between A/C amplifier and refrigerant pressure switch.
		No	Inspect for stuck closed A/C switch.
5	Verify test results. • If okay, return to diagnostic index to service any additional symptoms. • If malfunction remains, replace PCM. (See F5–94 PCM REMOVAL/INSTALLATION)		

End Of Sie

F5

NO.25 A/C DOES NOT CUT OFF UNDER WIDE OPEN THROTTLE CONDITIONS

AME438018881W28

25	A/C DOES NOT CUT OFF UNDER WIDE OPEN THROTTLE CONDITIONS
DESCRIPTION	• A/C compressor magnetic clutch does not disengage under wide open throttle.
POSSIBLE CAUSE	• Accelerator position sensor malfunction • Accelerator position sensor misadjustment • Loosely installed accelerator position sensor

Diagnostic Procedure

STEP	INSPECTION	RESULTS	ACTION
1	Does A/C compressor disengage when A/C switch is turned off?	Yes	Go to next step.
		No	Go to symptom troubleshooting “NO.24 A/C ALWAYS ON OR A/C COMPRESSOR RUNS CONTINUOUSLY”.
2	Perform self-test function using WDS or equivalent. Turn engine switch to ON. Retrieve any DTC. Is DTC displayed?	Yes	**DTC is displayed:** Go to appropriate DTC test. **Communication error message is displayed:** Inspect for following: • Open circuit between PCM control relay and PCM terminal 53 or 79 • Open circuit PCM control relay and PCM terminal 69 • PCM control relay stuck open. • Open or poor GND circuit (PCM terminal 65, 85, 103 or 104) • Poor connection vehicle body GND
		No	**No DTC is displayed:** Inspect adjustment of accelerator position sensor. If accelerator position sensor adjustment is not correct, adjust accelerator position sensor.
3	Verify test results. • If okay, return to diagnostic index to service any additional symptoms. • If malfunction remains, replace PCM. (See F5–94 PCM REMOVAL/INSTALLATION)		

End Of Sie

NO.26 CONSTANT VOLTAGE

AME438018881W31

26	CONSTANT VOLTAGE
DESCRIPTION	• Incorrect constant voltage.
POSSIBLE CAUSE	• Constant voltage circuit malfunction **Note** • Accelerator position sensor, fuel pressure sensor and boost sensor use constant voltage.

Diagnostic Procedure

STEP	INSPECTION	RESULTS	ACTION
1	Disconnect appropriate sensor connectors (accelerator position sensor, boost sensor and fuel pressure sensor) where constant voltage circuits inspection failed. Turn engine switch to ON position. Measure voltage between following appropriate sensor connector terminals: • Constant voltage terminal and GND terminal. Is constant voltage **above 6.0 V**?	Yes	Repair constant voltage circuit short to power in harness.
		No	Go to next step.
2	Is voltage across battery terminals **above 10.5 V**?	Yes	Go to next step.
		No	Inspect charging system.
3	Turn engine switch to OFF. Leave appropriate sensor connectors disconnected where constant voltage inspection failed. Measure voltage between positive terminal and GND circuit at appropriate sensor vehicle harness connector. Is voltage **above 10.5 V** and **within 1.0 V** of battery voltage?	Yes	Go to next step.
		No	Go to Step 8.
4	**Note** • Purpose of this step is to determine if WDS or equivalent is communicating with PCM. Turn engine switch to ON. Attempt to access ECT PID. Can ECT PID be accessed?	Yes	Go to Step 7.
		No	Go to next step.
5	Turn engine switch to OFF. Disconnect accelerator position sensor and PCM connectors. Turn engine switch to ON. Measure voltage between PCM connector terminals 104 and 53/79. Is voltage **greater than 10.5 V**?	Yes	Go to next step.
		No	Repair open circuit between PCM terminal 53/79 and PCM control relay.
6	Leave accelerator position sensor and PCM connectors disconnected. Measure resistance between PCM connector terminals 104 and 90. Is resistance **greater than 10,000 ohms**?	Yes	Inspect sensor connector for constant voltage again.
		No	Repair constant voltage circuit short to GND.
7	Turn engine switch to OFF. Leave accelerator position sensor disconnected.Disconnect PCM connector. Measure resistance between PCM connector 90 and constant voltage circuit at appropriate sensor connector. Is resistance **less than 5.0 ohms**?	Yes	Inspect sensor connector for constant voltage again.
		No	Repair open constant voltage circuit.
8	**Note** • Purpose of this step is to determine if WDS or equivalent is communicating with PCM. Reconnect appropriate sensor connector. Turn engine switch to ON. Attempt to access ECT PID. Can ECT PID be accessed?	Yes	Go to next step.
		No	Go to Step 11.

F5

STEP	INSPECTION	RESULTS	ACTION
9	Are DTCs present for two or more sensors connected to PCM terminal 91? Sensor connected to PCM terminal 91: • Accelerator position sensor. (P0122, P0123, P0222, P0223). • ECT sensor (P0117, P0118) • Fuel pressure sensor (P0192, P0193) • Fuel temperature sensor (P0182, P0183) • MAF/IAT sensor (P0102, P0103, P0112, P0113) • IAT sensor No.2	Yes	Go to next step.
		No	Repair open GND circuit to sensor where constant voltage circuit inspection failed.
10	Turn engine switch to OFF. Disconnect WDS or equivalent from DLC-2. Disconnect PCM connector. Measure resistance between GND circuit at appropriate sensor connector and PCM connector terminal 91. Is resistance **less than 5.0 ohms**?	Yes	Reconnect sensor connector. Go to appropriate DTC test.
		No	Repair open GND circuit.
11	Turn engine switch OFF. Disconnect PCM connector. Measure resistance between battery negative terminal and PCM terminals 65, 85, 103 and 104. Is each resistance **less than 5.0 ohms**?	Yes	Go to next step.
		No	Repair open GND circuit.
12	Turn engine switch to OFF. Measure resistance between GND circuit at following sensor connector and GND: • Accelerator position sensor • ECT sensor • BARO sensor • Fuel pressure sensor • Fuel temperature sensor • MAF/IAT sensor • IAT sensor No.2 Is resistance **below 5.0 ohms**?	Yes	GND circuits are okay. Inspect sensor connector for constant voltage again.
		No	Inspect for open GND circuit.
13	Turn engine switch to OFF. Disconnect accelerator position sensor. Turn engine switch to ON. Measure voltage between constant voltage circuit at accelerator position sensor and battery negative terminal. Is voltage **less than 0.5V**?	Yes	Inspect sensor connector for constant voltage again.
		No	Repair constant voltage circuit shorted power in harness.
14	Verify test results. • If okay, return to diagnostic index to service any additional symptoms. • If malfunction remains, replace PCM. (See F5–94 PCM REMOVAL/INSTALLATION)		

End Of Sie

ENGINE CONTROL SYSTEM OPERATION INSPECTION

AME438018881W33

Intake Shutter Valve Operation Inspection

1. Start the engine and warm up completely.
2. Turn off the A/C switch.
3. Connect the WDS or equivalent to the DLC-2.
4. Monitor the following PIDs using the WDS or equivalent.
   — If not as specified, inspect each sensor and related harness.

ECT PID
Above 60 °C {140 °F}
MAF PID
1.7—1.9 V
RPM PID
725—825 rpm

Note
- The position of the shutter valve, VSC shutter valve and EGR valve may not be as specified when idle speed is maintained for several minutes. If this occurs, briefly increase engine speed to 1,500 rpm and then re-check the position at idle speed.

5. Increase the engine speed and inspect that the intake shutter valve position changs as specified.
   - If not as specified, inspect the following.
     — Vacuum hose
     — Intake shutter solenoid valve actuator
     — Intake shutter solenoid valve and related harness.

Specification

Engine speed (rpm)	Intake shutter valve position
775	Halfway open
1,800	Fully open
2,500	Fully open
Above 3,400	Fully open

Guide Blade Actuator Operation Inspection

1. Start the engine and warm up completely.
2. Verify that the A/C switch is off.
3. Connect the WDS or equivalent to the DLC-2.
4. Monitor the following PIDs using the WDS or equivalent.
   — If not as specified, inspect each sensor and related harness.

ECT PID
Above 60 °C {140 °F}
MAF PID
1.7—1.9 V
RPM PID
725—825 rpm
ACSW PID
OFF

5. Inspect that the guide blade actuator position changes as specified.
   - If not as specified, inspect the following.
     — Vacuum hose
     — Guide blade actuator
     — VBC solenoid valve and related harness.

Specification

Engine switch position	Engine speed (rpm)	Guide blade actuator position
ON	775	Closed
OFF*1	0*3	Closed
OFF*2	0	Open

*1 : Just after turning engine switch off
*2 : 0 to 5 seconds after turning engine switch to OFF
*3 : Guide blade actuator begins to pull back

Main Fan/Additional Fan Motor Operation Inspection

1. Veriify that the engine is cold.
2. Connect the WDS or equivalent to the DLC-2.
3. Turn the engine switch to ON.
4. Turn the A/C switch off.
5. Verify that the main fan/additional fan are not operating.
   - If main fan/additional fan are operated, verify FAN_DUTY PID using the WDS or equivalent.
     — If FAN_DUTY PID is not 0%, inspect following PIDs.
       - ECT (voltage)
       - ACSW
     — If FAN_DUTY PID is 0%, inspect the following.
       - Fan control module
       - Open/short to GND circuit between fan control module and PCM

   Note
   - The main fan and additional fan do not rotate when FAN_DUTY PID is lower than 30% by fan motor internal friction.

6. Verify that both main fan and additional fan operation speed increases in accordance with FAN_DUTY PID changes.
   - If there is a problem, perform the following steps.

   (1) Verify clicking sound of fan relay when turning the engine switch from OFF to ON.
   - If there is no clicking sound, inspect the following.
     — Fan relay
     — Open circuit between main relay and fan relay
   - If clicking sound is heard, go to next step.

   (2) Inspect following parts in order, and in accordance with fan operating condition.
   - Both main fan and additional fan do not operate.
     — Open circuit between fan control module and fan relay
     — Open circuit in fan control module GND harness
     — Poor connection of fan control module connector
     — Fan control module
   - Only main fan does not operate.
     — Open/short to GND circuit between fan control module and main fan motor
     — Poor connection of fan control module connector and/or main fan motor connector
     — Main fan motor malfunction
     — Fan control module
   - Only additional fan does not operate.
     — Open/short to GND circuit between fan control module and additional fan motor
     — Poor connection of fan control module connector and/or additional fan motor connector
     — Additional fan motor malfunction
     — Fan control module

End Of Sie

ENGINE ELECTRICAL SYSTEM

FEATURES

OUTLINE G-2
OUTLINE OF CONSTRUCTION G-2
FEATURES G-2
SPECIFICATIONS G-2
STRUCTURAI VIEW G-3
CHARGING SYSTEM G-4
GENERATOR G-4
IGNITION SYSTEM G-6
IGNITION COIL G-6
SPARK PLUG G-7
STARTING SYSTEM G-8
STARTER G-8

SERVICE

OUTLINE G-9
SUPPLEMENTAL SERVICE INFORMATION G-9
CHARGING SYSTEM G-9
BATTERY REMOVAL/INSTALLATION G-9
BATTERY INSPECTION G-10
BATTERY RECHARGING G-11
GENERATOR REMOVAL/
INSTALLATION G-11
GENERATOR INSPECTION G-13
IGNITION SYSTEM G-15
IGNITION COIL REMOVAL/
INSTALLATION G-15
IGNITION COIL INSPECTION G-16
SPARK PLUG REMOVAL/
INSTALLATION G-17
SPARK PLUG INSPECTION G-17
HIGH-TENSION LEAD REMOVAL/
INSTALLATION G-17
STARTING SYSTEM G-18
STARTER REMOVAL/INSTALLATION G-18
STARTER INSPECTION G-18

OUTLINE

OUTLINE OF CONSTRUCTION

AME470202000W01

- With the addition of the L3 engine model, the engine electrical system has been newly adopted. (European specs.)
- The construction and operation of the engine electrical system for the MPV (LW) AJ engine model is the same as the current MPV (LW) GY engine model except the following features. (Australian, General (L.H.D. R.H.D.) specs.) (See MPV Training Manual 1666-1*-99F.)
- The construction and the operation of the engine electrical system for the new MZR-CD (RF Turbo) engine model is the same as the current 323 (BJ) RF engine model. (European specs.) (See Mazda 323 Training Manual 3324-10-98E.)

End Of Sie

FEATURES

AME470202000W02

Improved marketability and durability

- Iridium spark plug (L3 engine model)
- DEI (Double electric ignition) system (L3 engine model)
- SEI (Single electric ignition) system (AJ engine model)

Reduced size and system simplification

- A regulatorless generator with built-in power transistor (L3 and AJ engine model)

Improved reliability

- Coaxial-reduction type stater (L3 engine model)

Reduced operation noise

- A generator with Y connection circuit for the stator coil. (AJ engine model)

Modification to the engine characteristics

- A generator with higher output (MZR-CD (RF Turbo) engine model)

End Of Sie

SPECIFICATIONS

AME470202000W03

Item			Engine type				
			Gasoline engine			Diesel engine	
			New MPV (LW)		Previous MPV (LW)	NEW MPV (LW)	Current 323 (BJ)
			L3	AJ	GY	MZR-CD (RF Turbo)	RF
Battery	Type and capacity (5-hour rate)		55D23L (48) 80D26L(55)*1 *2		55D23L(48)	95D31L (64), 115D31L (70)*2	
	Voltage (V)		12				
Generator	Output (V-A)		12-110	12-110	12-100	12-90	12-80
	Regulated voltage (V)		Controlled by PCM			14.1—14.7	
	Self-diagnosis function					Equipped	
Ignition system	Type		DEI (Double electronic ignition)	SEI (Single electronic ignition)	DEI (Double electronic ignition)	—	
	Spark advance		Electronic			—	
	Firing order		1—3—4—2	1—4—2—5—3—6		—	
Spark plug	Type	NGK	ITR6F-13	—		—	
		Motorcraft	—	AWSF-32WM	AGSF-32FM AGSF-32F	—	
Starter	Type		Coaxial reduction				
	Output (kW)		1.4	1.4	1.6	2.2	

*1 : Except General (R.H.D.) specs.

*2 : Cold area

STRUCTURAL VIEW

AME470202000W05

L3

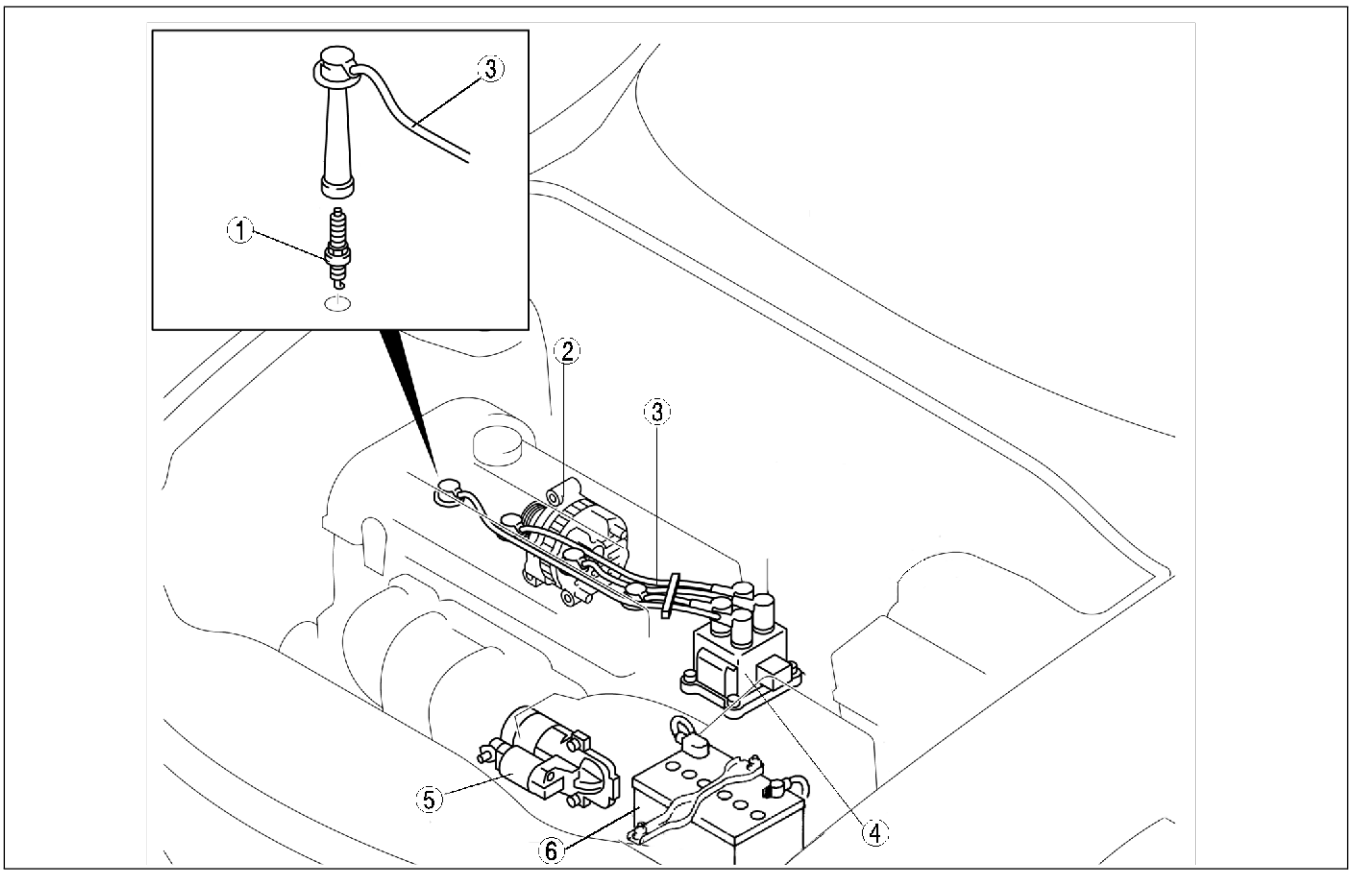

AME4712W102

1	Spark plug
2	Generator
3	High-tension lead

4	Ignition coil
5	Starter
6	Battery

AJ

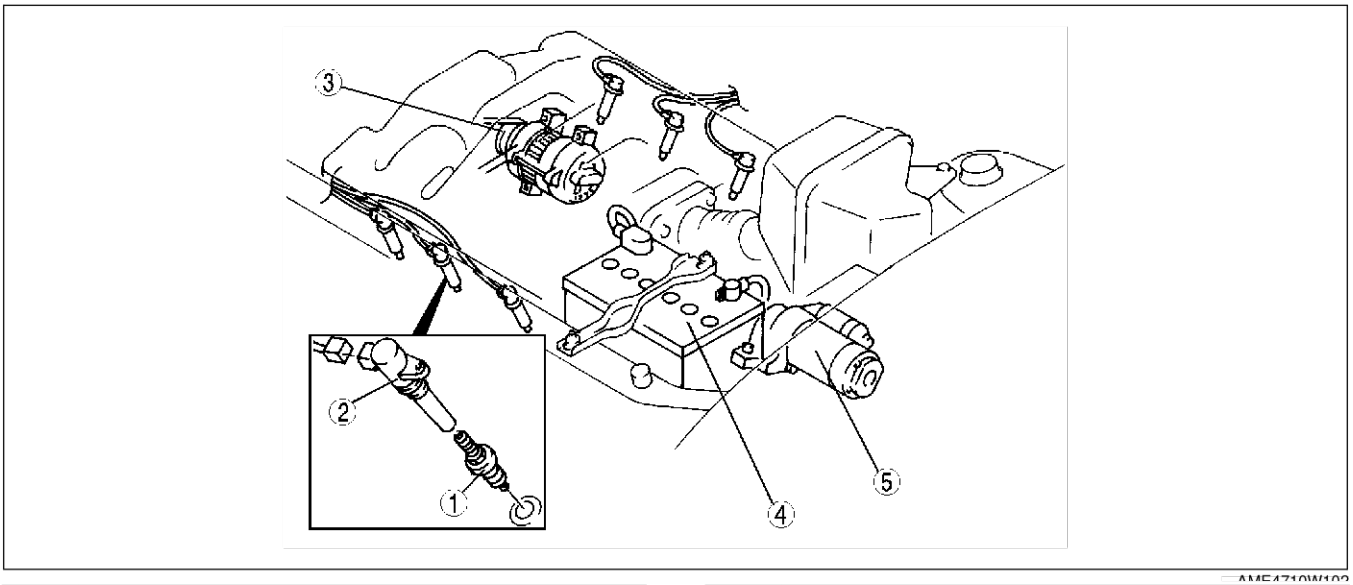

AME4710W102

1	Spark plug
2	Ignition coil
3	Generator

4	Battery
5	Starter

MZR-CD (RF Turbo)

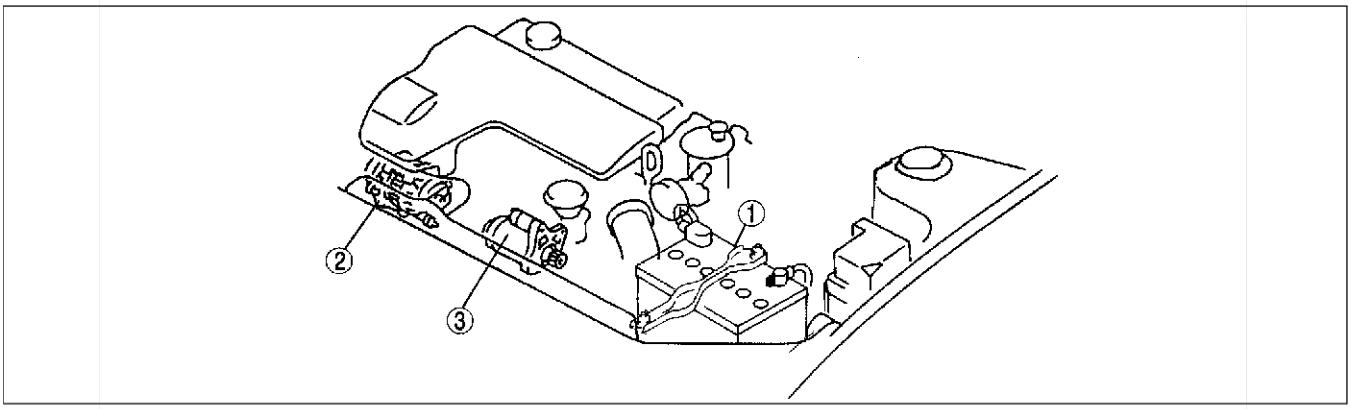

AME4710W103

1	Battery
2	Generator
3	Starter

End Of Sie

CHARGING SYSTEM

GENERATOR

AME471018300W03

L3

Structure

- The voltage regulator has been eliminated, and generator control is carried out by the PCM.
- A Generator duct made of plastic and generator heat insulator made of iron have been adopted to protect the generator from the exhaust manifold heat.

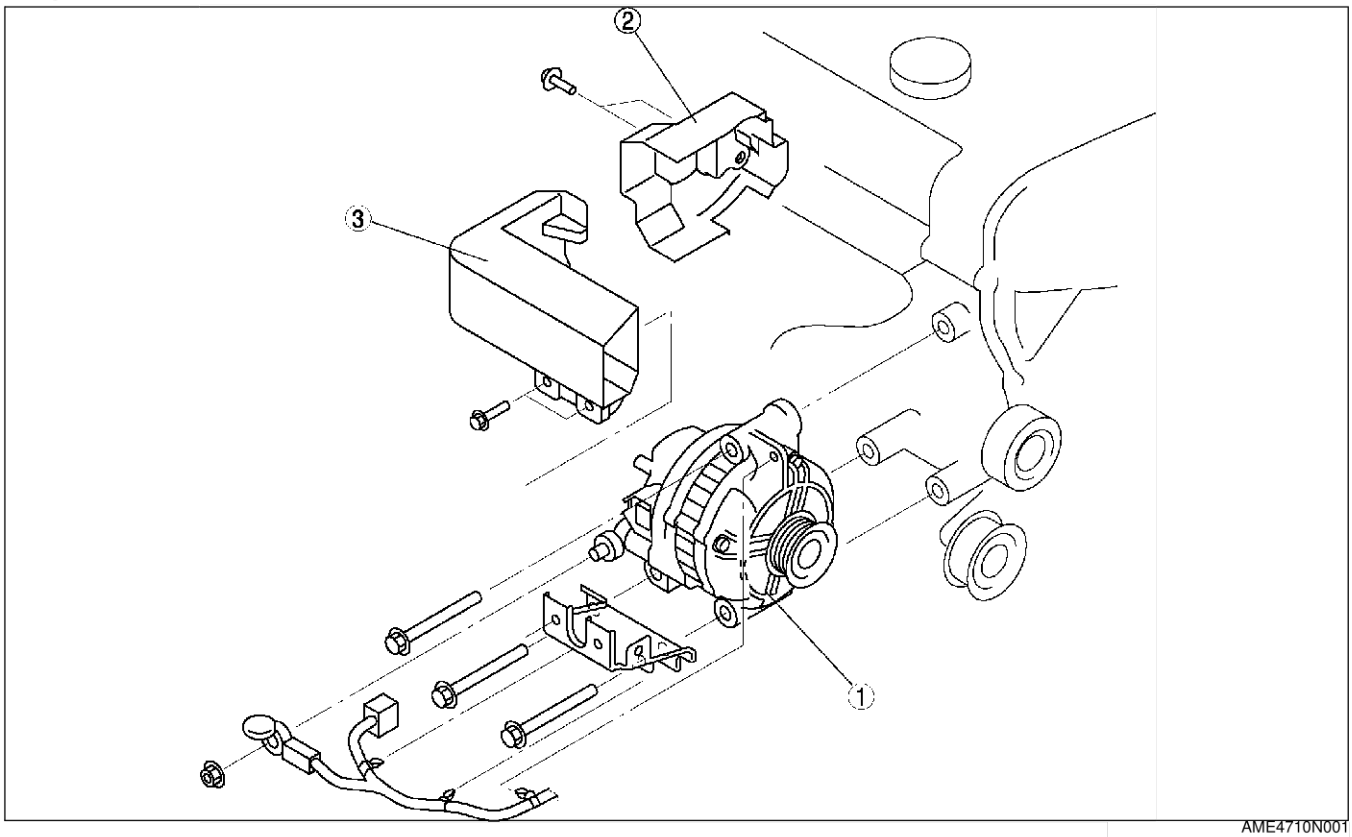

AME4710N001

1	Generator
2	Generator heat insulator
3	Generator duct

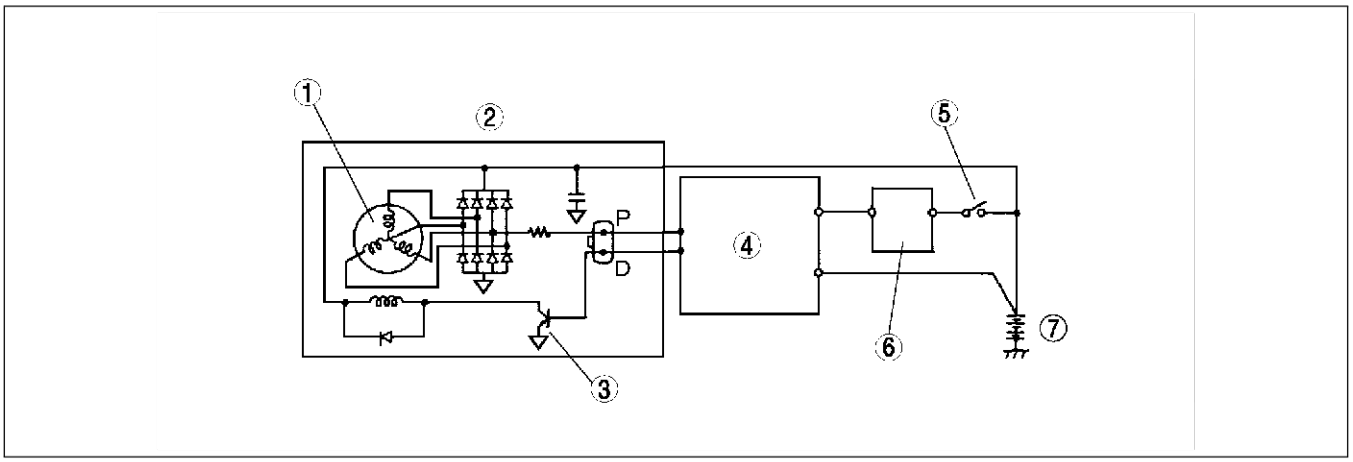

AME4710N002

1	Stator coil
2	Generator
3	Power transistor
4	PCM

5	Ignition switch
6	Generator warning light
7	Battery

AJ
Structure

- The one-way clutch has been eliminated from the generator pulley due to the reduced drive belt pulsation from the improved engine performance.
- Due to the doubled Y connection circuit, the operation noise has been reduced and the output has become higher.

G

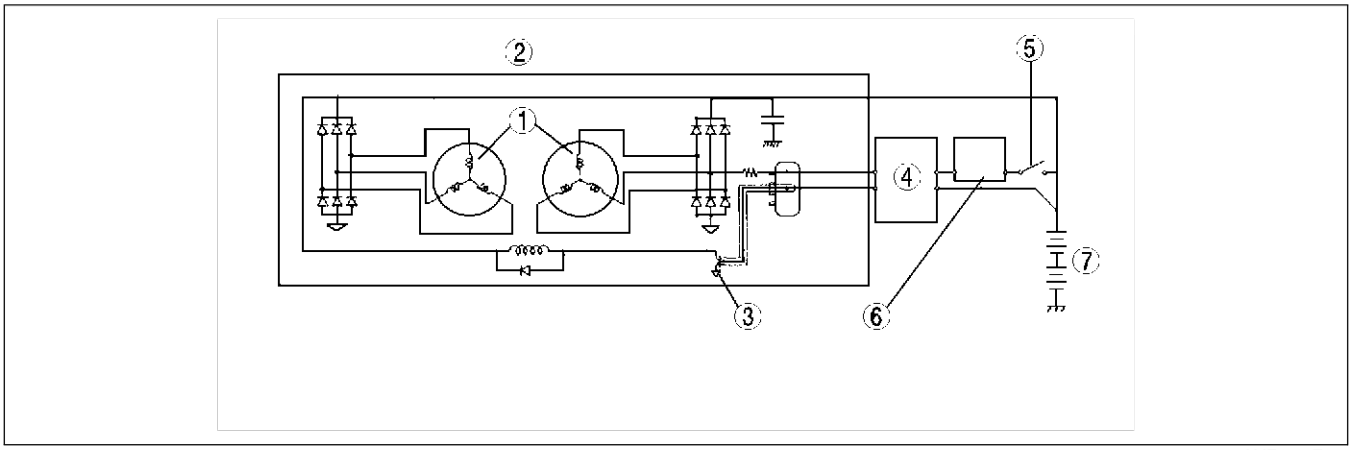

AME4710T101

1	Stator coil
2	Generator
3	Power transistor
4	PCM

5	Ignition switch
6	Generator warning light
7	Battery

End Of Sie

IGNITION SYSTEM

IGNITION COIL

AME471218110W06

L3

Structure

- The ignition coil contains two coils. They are for cylinder numbers 1 and 4, and cylinder numbers 2 and 3 respective. (Matched pairs)
- The two secondary terminals contain the secondary coils positive and negative terminals. The closed circuit of secondary coils is formed through the high-tension leads, two spark plugs and the cylinder head. Due to this, one coil ignites two cylinders simultaneously.
- The firing timing of the coil is controlled by the PCM due to built-in ignition system. (See Section F3)

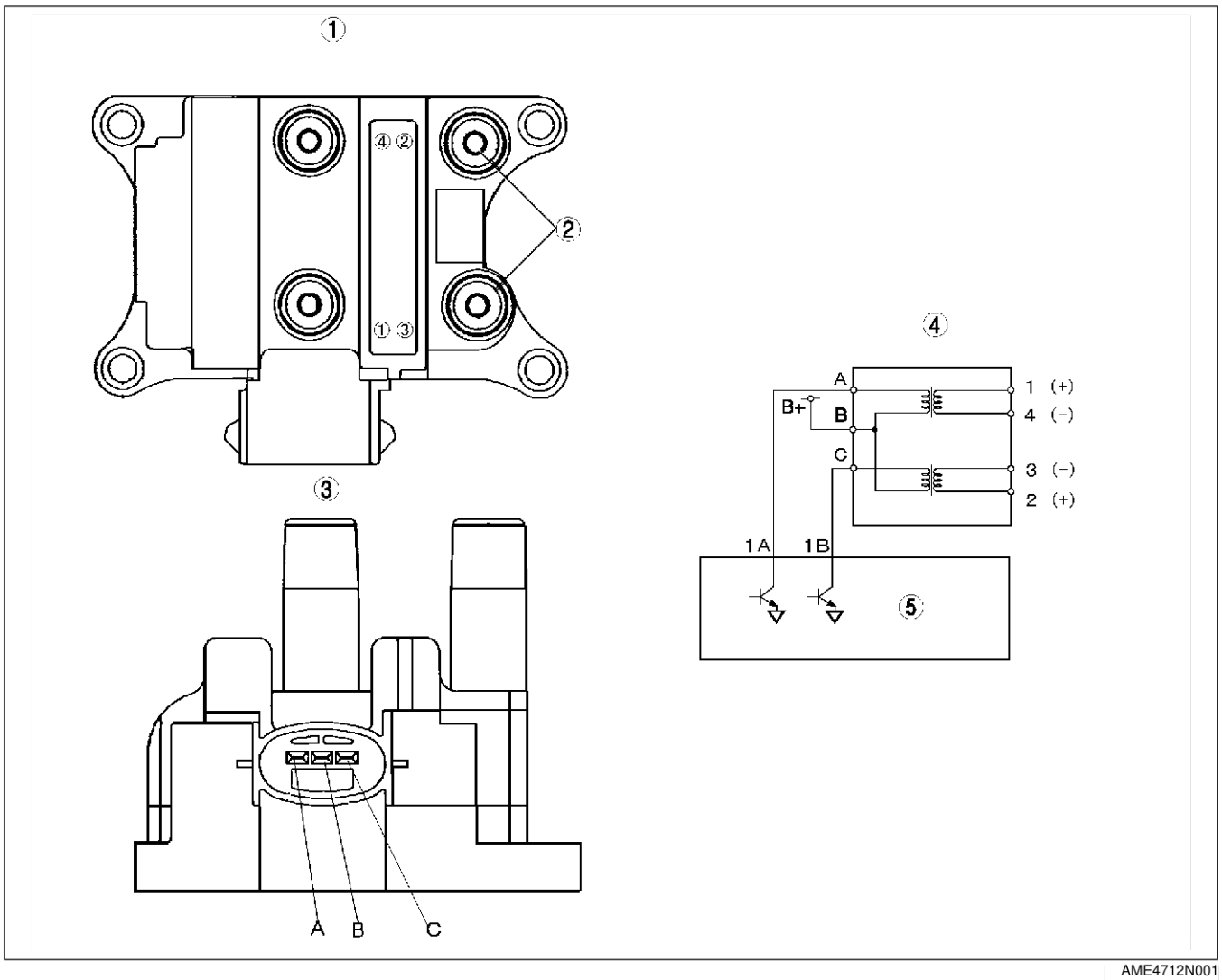

AME4712N001

1	Ignition coil upper surface figure
2	Two secondary terminals
3	Ignition coil side view

4	Ignition coil
5	PCM

Terminal layout

Terminal		Signal
3 terminals	A	Ignition coil control signal 2 (No.1, No.4)
	B	Power supply
	C	Ignition coil control signal 1 (No.2, No.3)

IGNITION COIL

AJ

- The coil on the plug ignition operates similar to standard coil pack ignition except each plug has one coil per plug. The electric wiring system of the coil on the plug ignition is indicated in the figure below.

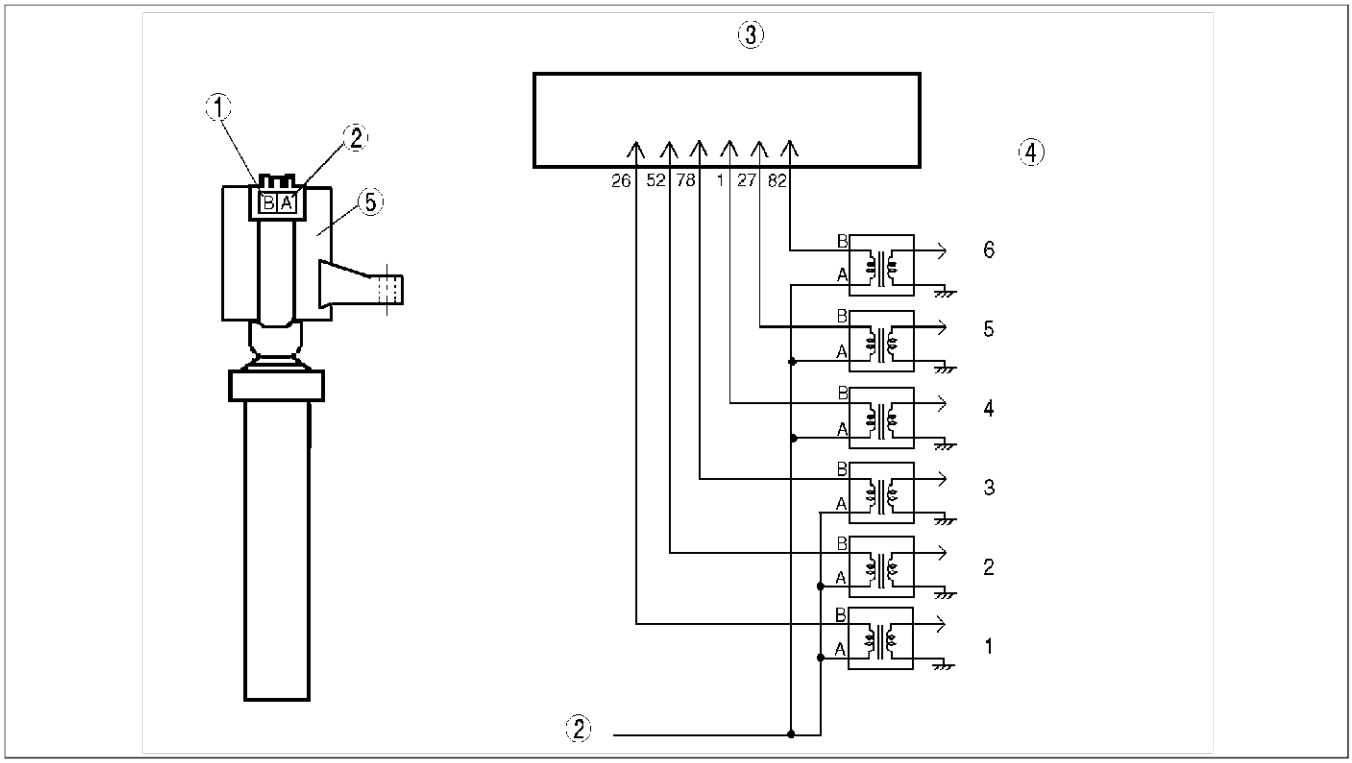

AME4712W101

1	To PCM
2	IG1
3	PCM

4	Cylinder number
5	Ignition coil

SPARK PLUG

AME471218110W07

L3

Structure

The iridium spark plug with excellent durability and firing performance has been adopted.

The extremely thin, center electrode has a diameter of 0.6 mm {0.023 in} and is made of iridium alloy. Durability also has been improved by the use of a platinum-tipped grounding electrode.

Based on the thinner electrode (center electrode), electric discharge has been reduced and ignition has been improved, resulting in stable ignition performance under any driving conditions and a substantial improvement in fuel economy.

1	Iridium alloy
2	Platinum-tipped

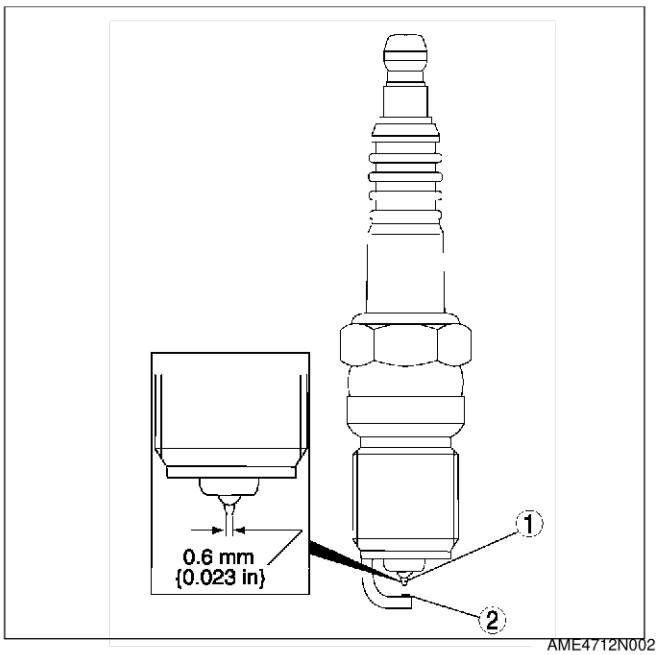

AME4712N002

End Of Sta

STARTING SYSTEM

STARTER

AME471418400W03

L3

Structure

- High torque coaxial reduction type starter has been adopted.

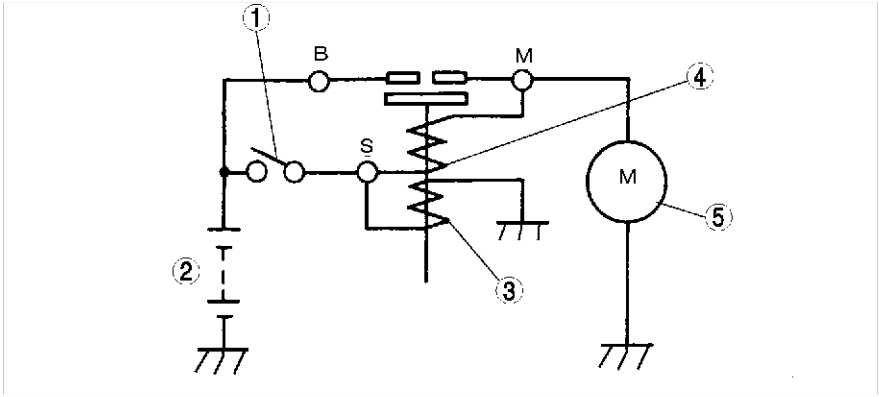

YTA4714W102

1	Ignition coil
2	Battery
3	Holding coil

4	Pull-in coil
5	Motor

End Of Sie

OUTLINE

SUPPLEMENTAL SERVICE INFORMATION

AME470202000W04

- The following changes and/or additions have been made since publication of the MPV Workshop Manual (1666 -1*-99F).
- For the new MPV (LW) AJ engine model, the procedures are the same with the previous MPV (LW) GY engine model except for the following.

Battery
- Removal/Installation procedure has been added. (MZR-CD (RF Turbo) engine models)
- Inspection procedure has been added.
- Recharging procedure has been added.

Generator
- Removal/Installation procedure has been added. (L3 and MZR-CD (RF Turbo) engine models)
- Inspection procedure has been added.

Ignition coil
- Removal/Installation procedure has been added. (L3 and AJ engine models)
- Inspection procedure has been added. (L3 and AJ engine models)

Spark plug
- Removal/Installation procedure has been added. (L3 and AJ engine models)
- Inspection procedure has been added. (L3 and AJ engine models)

High-tension lead
- Removal/Installation procedure has been added. (L3 engine model)

Starter
- Removal/Installation procedure has been added. (L3 and MZR (RF Turbo engine model)
- Inspection procedure has been added. (MZR-CD (RF Turbo) engine model)

End Of Sta

G

CHARGING SYSTEM

BATTERY REMOVAL/INSTALLATION

AME471018520W01

MZR-CD (RF Turbo)

1. Remove in the order indicated in the table.
2. Install in the reverse order of removal.

1	Negative battery cable
2	Positive battery cable
3	Battery clamp
4	Battery
5	Battery tray

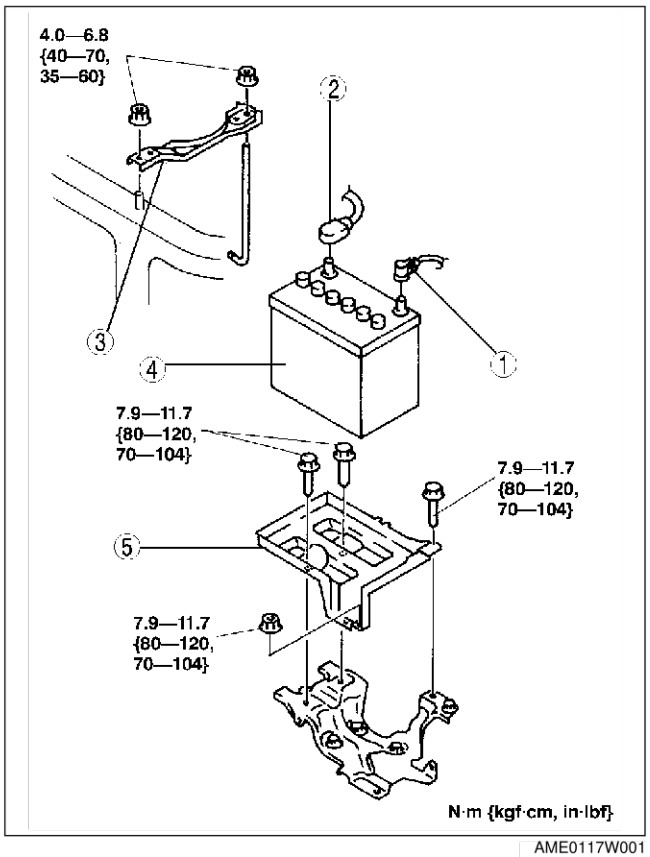

AME0117W001

BATTERY INSPECTION

AME471018520W02

Battery

1. Inspect the battery in the following procedure.

Step	Inspection	Result	Action
1	Measure open circuit voltage of battery.	Above 12.4 V	Go to Step 3.
		Below 12.4 V	Go to next step.
2	Quick charge for 30 min and recheck voltage.	Above 12.4 V	Go to next step.
		Below 12.4 V	Replace battery.
3	Apply load test (see load test chart) to battery using a battery load tester and record battery voltage after 15 s. Is voltage more than specification?	Yes	Battery okay.
		No	Replace battery.

Load test chart

Battery	Load (A)
55D23L	180
80D26L	195
95D31L	250
115D31L	320

Battery positive voltage with load

Approximate battery temp.	Minimum voltage (V)
21 °C {70 °F}	9.6
15 °C {60 °F}	9.5
10 °C {50 °F}	9.4
4 °C {40 °F}	9.3
-1 °C {30 °F}	9.1
-7 °C {20 °F}	8.9
-12 °C {10 °F}	8.7
-18 °C {0 °F}	8.5

Back-up Current

1. Verify that the ignition switch is off and that the ignition key has been removed.
2. Disconnect the negative battery cable.

Caution

- **Operating electrical loads while measuring the back-up current can damage the circuit tester.**

3. Measure the back-up current between the negative battery terminal and the negative battery cable.
   (1) If the current exceeds the maximum, remove the fuse in the main fuse block and the fuse block one by one while measuring the back-up current.
   (2) Inspect and repair harnesses and connectors on the fuse where the current has been reduced.

Back-up current
20 mA max.

End Of Sec

BATTERY RECHARGING

AME471018520W03

Caution
- **To avoid damaging the battery, do not quick charge for over 30 min.**

1. Remove the battery from vehicle and place it in a pan of water.
2. Connect a battery charger to the battery.
3. Adjust the charging current as follows.

Battery type (5-h rate)	Slow charge (A)	Quick charge (A)
55D23L (48)	4.5—5.5	30
80D26L (55)	5.5—6.5	35
95D31L (64)	6.5—8.0	40
115D31L (70)	7.0—8.5	45

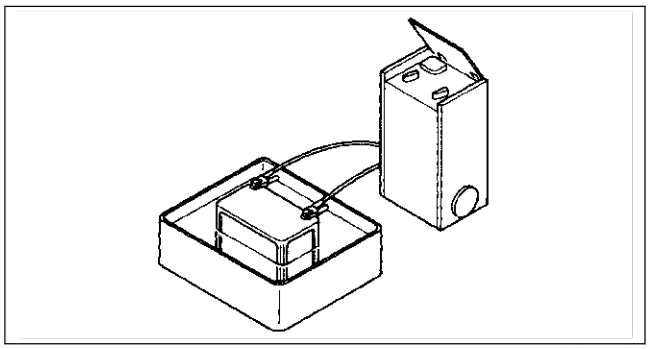

WLU117WA0

4. After the battery has been recharged, measure the battery positive voltage and verify that the battery keeps specified voltage for more than **1 h**.
   - If not as specified, replace the battery.

Specification
Above 12.4 V

End Of Sta

GENERATOR REMOVAL/INSTALLATION

AME471018300W04

Warning
- **When the battery cables are connected, touching the vehicle body with generator terminal B will generate sparks. This can cause personal injury, fire, and damage to the electrical components. Always disconnect the battery before performing the following operation.**

Caution
- **The generator can be damaged by the heat from the exhaust manihold. Make sure the generator duct and the generator heat insulator are installed securely.**

1. Disconnect the negative battery cable.
2. Remove the splash shield.
3. Remove the transverse member. (L3 engine model)
   (See Section R.)
4. Remove A/C compressor with hose and pipe still connected. (MZR-CD (RF Turbo) engine model)
5. Remove fan assembly. (MZR-CD (RF Turbo) engine model)
   (See E–20 COOLING FAN MOTOR REMOVAL/INSTALLATION.)
6. Remove the drive belt. (L3, AJ, MZR-CD (RF Turbo) engine model) (See B3–25 DRIVE BELT REPLACEMENT, B4–12 DRIVE BELT REPLACEMENT.)
7. Remove in the order indicated in the table.
8. Install in the reverse order of removal.

L3

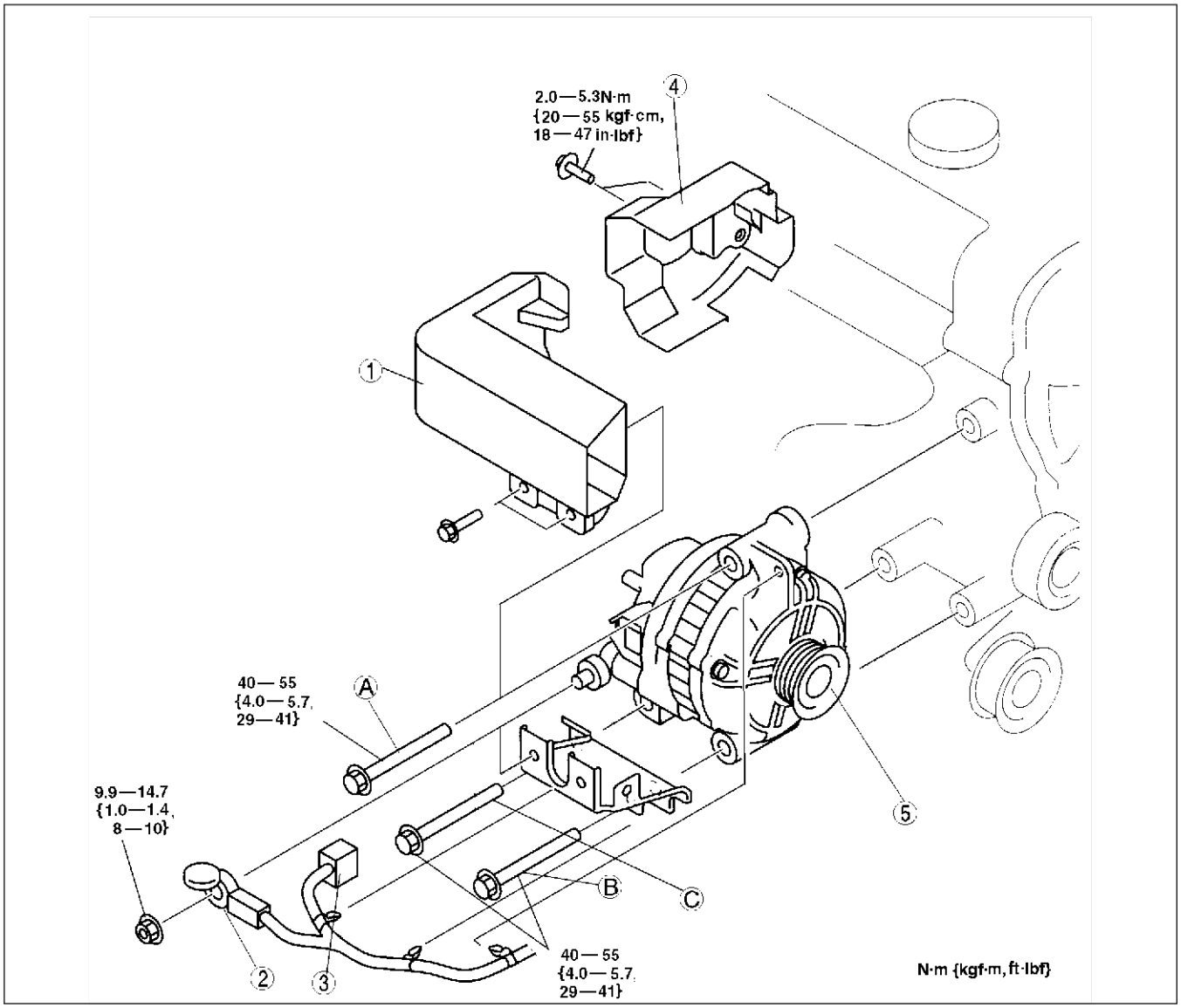

AME0117W002

1	Generator duct
2	Terminal B wire
3	Connector

4	Generator heat insulator
5	Generator (See G–12 Generator Installation Note)

Generator Installation Note

1. Tighten the bolt A temporary.
2. Tighten the bolt in the order B, A, and C.

MZR-CD (RF Turbo)

1	Terminal B wire
2	Connector
3	Generator

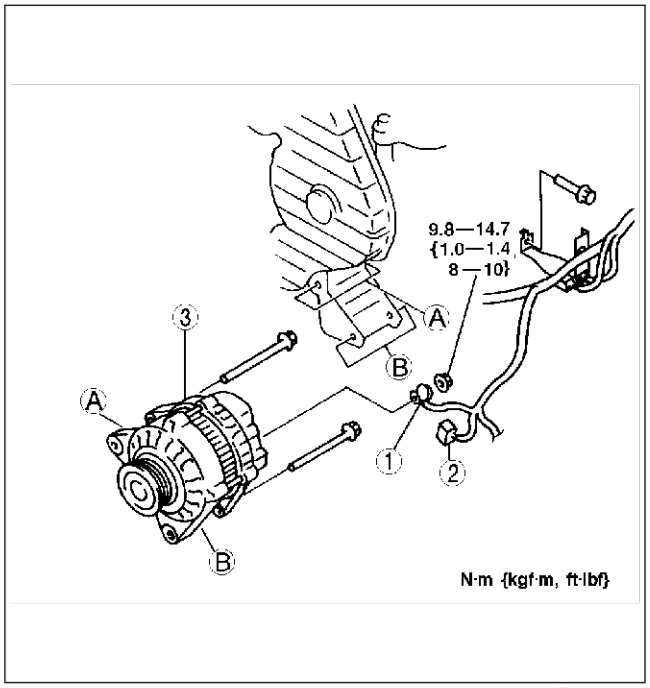

AME0117W004

End Of Sie

GENERATOR INSPECTION

AME471018300W02

G

Generator Warning Light

L3, AJ

1. Verify that the battery is fully charged.
   - Charge if necessary.
2. Verify that the drive belt deflection/tension is correct. (AJ engine model) (See Section B2.)
   - Replace if necessary.
3. Turn the ignition switch on and verify that the generator warning light turns on.
   - If not, inspect generator warning light, wiring harnesses between the battery, generator warning light, and PCM terminal 4C (L3 engine model), 98 (AJ engine model). When the generator warning light and the wiring harnesses are okay, replace the PCM.
4. Verify that the generator warning light goes out after the engine is started.
   - If not, inspect if any of the following DTCs are displayed: P0112, P0113, P1631, P1633, P1634. (AJ) (See F3–100 ON-BOARD DIAGNOSTIC TEST.) (L3 engine model) (F4–109 ON-BOARD DIAGNOSTIC TEST.)

MZR-CD (RF Turbo)

1. Verify that the battery is fully charged.
   - Charge if necessary.
2. Verify that the drive belt deflection/tension is correct. (See B4–12 DRIVE BELT INSPECTION.)
   - Replace if necessary.
3. Turn the engine switch on and verify that the generator warning light turns on.
   - If not, inspect generator warning light, wiring harnesses between the battery, generator warning light, and generator terminal L.
4. Verify that the generator warning light goes out after the engine is started.
   - If not, inspect the generator.

Generator
Voltage

1. Verify that the battery is fully charged.
   - Charge if necessary.
2. Inspect the drive belt deflection/tension. (AJ, MZR-CD (RF Turbo) engine models) (See Section B2, B4–12 DRIVE BELT INSPECTION.)
   - Replace if necessary.
3. Turn off all electrical loads.
4. Turn the ignition switch (L3, AJ engine models), engine switch (MZR-CD (RF Turbo) engine model) to start the engine and verify that the generator rotates smoothly without any noise while the engine is running.
5. Measure the voltage at the terminals shown in the table.
   - If not as specified, repair or replace the generator if necessary.

Standard voltage (L3, AJ)

Terminal	Ignition switch ON (V)	Idle (V)[20 °C {68 °F}]
B	B+	13—15
P	Approx. 1	Approx. 3—8
D	Approx. 0	*

* : Turn the following electrical loads on and verify that the voltage reading increases.

- Headlights
- Blower motor
- Rear window defroster

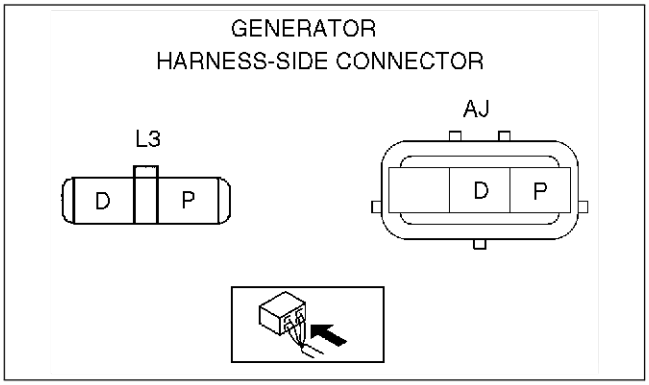

AME4710W005

Standard voltage (MZR-CD (RF Turbo))

Terminal	Ignition switch ON (V)	Idle (V) [20 °C {68 °F}]
B	B+	14.1—14.7
L	Approx. 1	14.1—14.7
S	B+	14.1—14.7

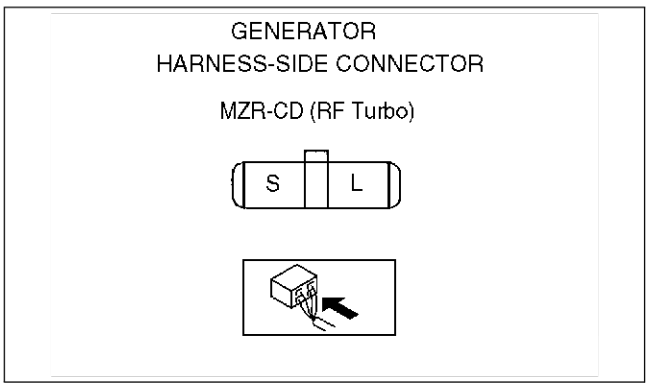

AME4710W006

Current

1. Verify that the battery is fully charged.
   - Charge if necessary.
2. Verify that the drive belt deflection/tension is correct. (AJ engine model) (See Section B2.) (MZR-CD (RF Turbo)) B4–12 DRIVE BELT INSPECTION.)
   - Replace if necessary.
3. Disconnect the negative battery cable.
4. Connect an ammeter, capable of reading 120 A or more, between generator terminal B and the wiring harness.
5. Connect the negative battery cable.
6. Turn off all electrical loads.
7. Start the engine and increase the engine speed to **2,000—2,500 rpm**.
8. Turn the following electrical loads on and verify that the current reading increases.
   (1) Headlights
   (2) Blower motor
   (3) Rear window defroster
      - If generator terminal B current will not increase, repair or replace the generator if necessary.

Note

- Current required for generating power varies with electrical loads applied.

Standard current (Reference)

Measuring conditions
Room temperature: 20 °C {68 °F}
Voltage: 13.5 V
Engine hot

Engine speed (rpm)	Terminal B current (A)*		
	L3	AJ	MZR-CD (RF Turbo)
1,000	0—80	0—90	0—80
2,000	0—100	0—105	0—90

* : 0 A is not included.

End Of Sie

IGNITION SYSTEM

IGNITION COIL REMOVAL/INSTALLATION

AME471218110W01

Caution
- **Disconnecting the ignition coil and plug cap can tear the plug cap off and cause damage to the connecting part. Disconnect the ignition coil and plug cap only when each component needs to be replaced, and be careful not to tear and damage them.**

1. Disconnect the negative battery cable.
2. Remove the plug hole plate. (AJ engine model) (See Section B2)
3. Remove in the order indicated in the table.
4. Install in the reverse order of removal.

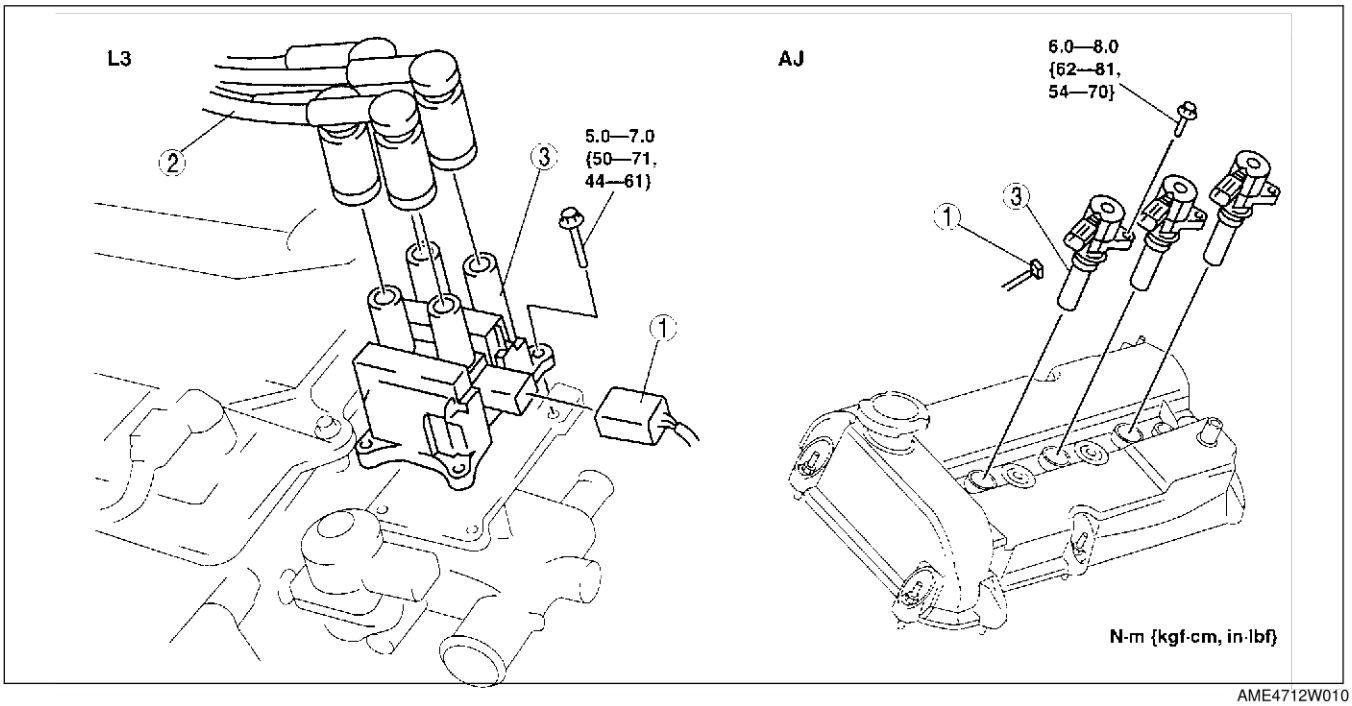

AME4712W010

1	Connector
2	High-tension lead (L3 engine model) (See G–17 HIGH-TENSION LEAD REMOVAL/INSTALLATION)

3	Ignition coil

End Of Sie

IGNITION COIL INSPECTION

AME471218110W02

L3, AJ

Primary coil winding

1. Disconnect the ignition coil connector.
2. Measure the resistance between the following terminals using an ohmmeter:

   - L3: A and B, B and C
   - AJ: A and B

   — If not as specified, replace the ignition coil.

Specification
L3: 0.49-0.57 ohms
AJ: 0.51-0.53 ohms

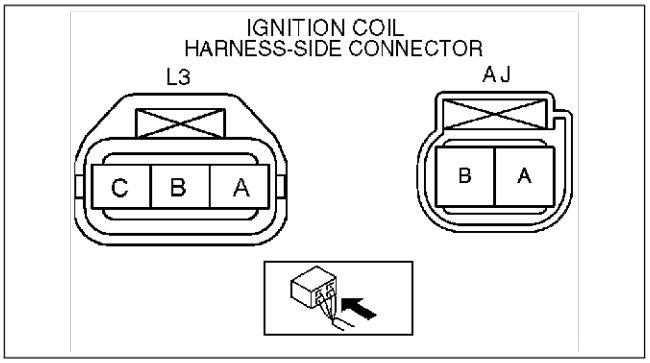

AME4710W008

Secondary Coil Winding

L3, AJ

1. Disconnect the ignition coil connector.
2. Remove the ignition coil.
3. Measure the resistance between the following using an ohmmeter:
   - L3: lead hole 1 to 4, 2 to 3
   - AJ: terminal A to coil boot socket

   — If not as specified, replace the ignition coil.

Specification
L3: 9.5—11.1 kilohms
AJ: 4.6—5.6 kilohms

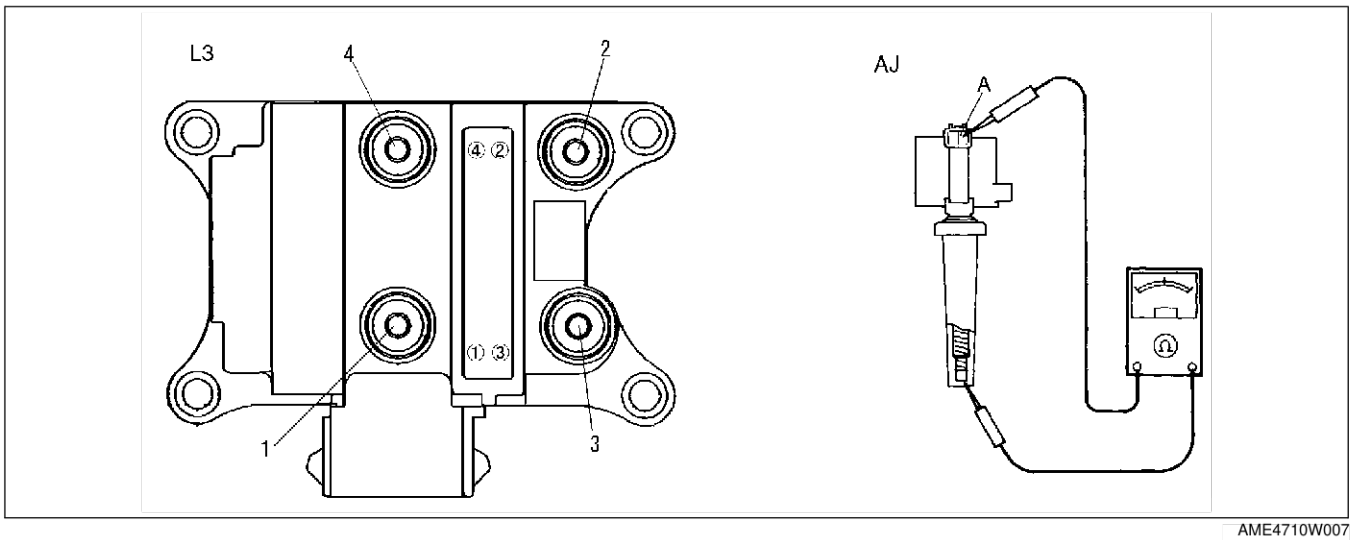

AME4710W007

Insulation Resistance of Case

L3

1. Disconnect the high-tension lead.
2. Disconnect the ignition coil connector.

3. Measure the insulation resistance from terminal B to ignition coil case using an ohmmeter.
   - If not as specified, replace the ignition coil.

Specification
Above 10 megohms

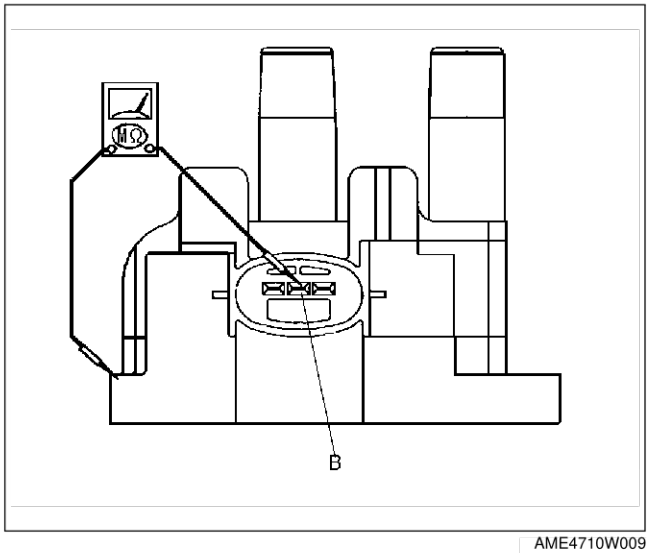

AME4710W009

End Of Sie

SPARK PLUG REMOVAL/INSTALLATION

AME471218110W03

1. Disconnect the negative battery cable.
2. Remove the plug hole plate.
3. Disconnect the high-tension lead. (L3 engine model)
4. Remove the spark plugs using the plug-wrench.
5. Install in the reverse order of removal.

Tightening torque:
L3 : 10—24 N·m {1.1—2.4kgf·m, 8.0—17.3ft·lbf}
AJ: 9—20 N·m {0.9—2.0kgf·m, 6.6—14.4ft·lbf}

End Of Sie

SPARK PLUG INSPECTION

AME471218110W04

L3, AJ

Caution
- **Do not inspect, adjust, or clean the plug gap with a wire brush, as it can damage the platinum tip.**
- **When cleaning a spark plug with a plug clear, clean the plug quickly for less than 20 seconds with air pressure below 58.8 kpa {6.0 kgf/cm, 8.5 psi}. Verify that there is no carbon, sand, etc. in the spark plug after cleaning.**

End Of Sie

HIGH-TENSION LEAD REMOVAL/INSTALLATION

AME471218110W05

L3

Caution
- **The high-tension leads must be reinstalled to their original position. Incorrect installation can damage the leads and cause power loss, and negatively affect the electronic components.**

1. Disconnect the negative battery cable.
2. Remove the plug hole plate.
3. Remove the high-tension lead.
4. Install in the reverse order of removal.

End Of Sie

STARTING SYSTEM

STARTER REMOVAL/INSTALLATION

AME471418400W01

L3, MZR-CD (RF Turbo)

Warning

- **When the battery cables are connected, touching the vehicle body with starter terminal B will generate sparks. This can cause personal injury, fire, and damage to the electrical components. Always disconnect the battery negative cables before performing the following operation.**

1. Disconnect the negative battery cable.
2. Remove the splash shield.
3. Remove the release cylinder. (MZR-CD (RF Turbo) engine model)
4. Install in the reverse order of removal.
5. Remove in the order indicated in the table.

1	Terminal B wire
2	Terminal S wire
3	Starter

End Of Sie

STARTER INSPECTION

AME471418400W02

On-Vehicle Inspection

MZR-CD (RF Turbo)

1. Verify that the battery is fully charged.
2. Crank the engine and verify that the starter rotates smoothly without any noise.
   - If not as specified, inspect the following:
     - — Remove the starter and inspect the magnetic switch and the starter.
     - — Inspect the related wiring harness and the engine switch.

No Load Test

1. Verify that the battery is fully charged.
2. Connect the starter, battery, voltmeter and ammeter as shown.
3. Operate the starter and verify that it rotates smoothly.
4. Measure the voltage and current while the starter is operating.
   - If not as specified, replace the starter.

Specification

Engine type	
MZR-CD (RF Turbo)	
Voltage (V)	11
Current (A)	Below130

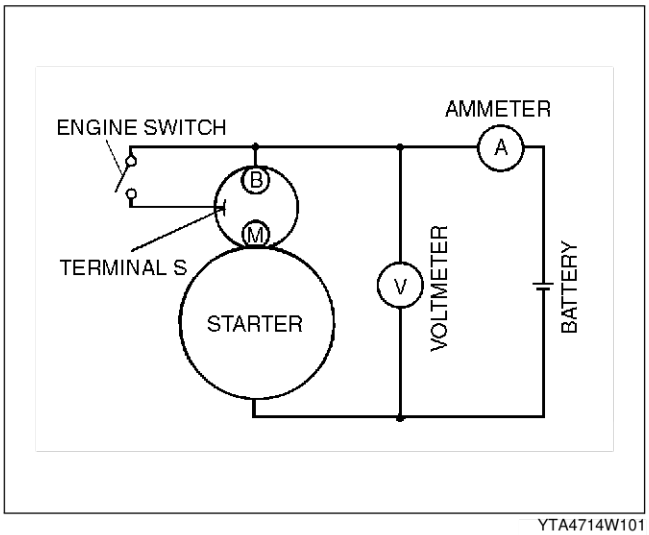

YTA4714W101

End Of Sie

CLUTCH

FEATURES

OUTLINE H-2
OUTLINE OF CONSTRUCTION H-2
FEATURES H-2
SPECIFICATIONS H-2

SERVICE

OUTLINE H-2
SUPPLEMENTAL SERVICE INFORMATION H-2
CLUTCH FLUID H-3
CLUTCH FLUID REPLACEMENT H-3
CLUTCH PEDAL H-4
CLUTCH PEDAL INSPECTION/ADJUSTMENT H-4
CLUTCH PEDAL REMOVAL/INSTALLATION H-5
CLUTCH MASTER CYLINDER H-6
CLUTCH MASTER CYLINDER REMOVAL/INSTALLATION H-6
CLUTCH MASTER CYLINDER DISASSEMBLY/ASSEMBLY H-7
CLUTCH RELEASE CYLINDER H-8
CLUTCH RELEASE CYLINDER REMOVAL/INSTALLATION H-8
CLUTCH RELEASE CYLINDER DISASSEMBLY/ASSEMBLY H-8
CLUTCH UNIT H-10
CLUTCH UNIT REMOVAL/INSTALLATION H-10
CLUTCH COVER INSPECTION H-14
FLYWHEEL H-14
FLYWHEEL INSPECTION H-14

OUTLINE

OUTLINE OF CONSTRUCTION

AME490216003W01

- The construction and operation of the clutch is essentially carried over from that of the previous MPV (LW) models, except for the following features. (See Mazda MPV Training Manual 3340-1*-99F.)

End Of Sie

FEATURES

AME490216003W02

Adoption of the L3 engine and MZR-CD (RF Turbo) engine models

- The specifications for the L3 engine and MZR-CD (RF Turbo) engine models have been added.

Increased torque transmission capacity

- Increased clutch cover set load.

Improved reliability

- Adoption of a clutch master cylinder with a one-way valve for the G15M-R manual transaxle model.

Reduced noise

- The flywheel with a damper has been adopted for the A65M-R manual transaxle model.

Bold frames:New specifications

End Of Sie

SPECIFICATIONS

AME490216003W05

Item			New MPV (LW)		Previous MPV (LW)
Manual transaxle type			G15M-R	A65M-R	G15M-R
Clutch control			Hydraulic		
Clutch cover	Spring type		Diaphragm		
	Set load	(N {kgf, lbf})	6,000 {611, 1,350}	6,550 {668, 1,472}	5,200 {530, 1,169}
Clutch disc	Outer diameter	(mm {in})	215 {8.46}	239 {9.41}	225 {8.86}
	Inner diameter	(mm {in})	150 {5.91}	160 {6.30}	150 {5.91}
Clutch pedal	Type		Suspended		
	Pedal ratio		6.41		6.55
	Full stroke (Reference value)	(mm {in})	148 {5.83}		130.7 {5.15}
Clutch master cylinder inner diameter		(mm {in})	15.87 {0.625}		
Clutch release cylinder inner diameter		(mm {in})	19.05 {0.750}		
Clutch fluid type			SAE J1703, FMVSS 116 DOT-3 or DOT-4		

Bold frames:New specifications

End Of Sie

OUTLINE

SUPPLEMENTAL SERVICE INFORMATION

AME490216003W04

- The following changes have been made since publication of the Mazda MPV Workshop Manual (1666-1*-99F).

CLUTCH FLUID

- Replacement procedure has been modified.

CLUTCH PEDAL

- Inspection/adjustment procedure has been modified.
- Removal/installation procedure has been modified.

CLUTCH MASTER CYLINDER (G15M-R manual transaxle model)

- Removal/installation procedure has been modified.
- Disassembly/assembly procedure has been modified.

CLUTCH RELEASE CYLINDER

- Removal/installation procedure has been modified.
- Disassembly/assembly procedure has been modified.

CLUTCH UNIT

- Removal/installation procedure has been modified.
- Clutch cover inspection procedure has been modified.

FLYWHEEL

- Flywheel inspection procedure has been modified.

End Of Sie

CLUTCH FLUID

CLUTCH FLUID REPLACEMENT

AME491216010W02

Caution
- **Be careful not to spill clutch fluid on painted surfaces. If clutch fluid is spilled, wash it off immediately.**

Note
- Do not mix different brands of clutch fluid.
- Do not reuse drained clutch fluid.

1. Draw the fluid from the reservoir with a suction pump.
2. Remove the splash shield.
3. Remove the bleeder cap from the clutch release cylinder and attach a vinyl hose to the bleeder plug.
4. Place the other end of the vinyl hose into a container.
5. Slowly pump the clutch pedal several times.
6. With the clutch pedal depressed, loosen the bleeder screw using the **SST** to let fluid escape.
7. Tighten the bleeder screw using the **SST** to stop the fluid.
8. Repeat Steps 5 and 6 until only clean fluid is visible.
9. Tighten the bleeder screw.

Tightening torque
5.9—8.8 N·m {60—90 kgf·cm, 53—78 in·lbf}

10. Install the splash shield.
11. Add fluid to the MAX mark.
12. Verify correct clutch operation.

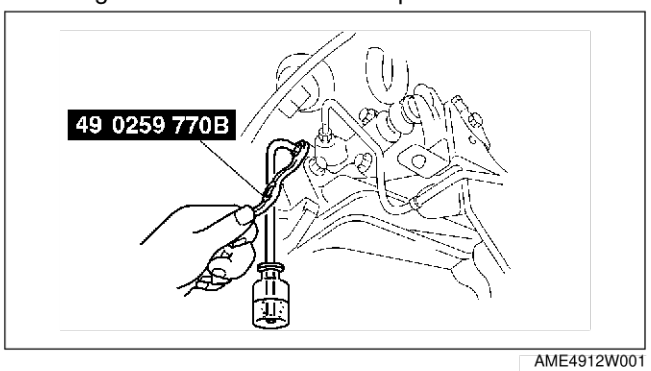

AME4912W001

End Of Sie

H

CLUTCH PEDAL

CLUTCH PEDAL INSPECTION/ADJUSTMENT

AME491441030W01

Clutch Pedal Height

1. Measure the distance from the upper surface of the pedal pad to the carpet.
   - If not as specified, adjust the pedal height by turning adjustment bolt B and locknut A.

Pedal height (with carpet)
231—236 mm {9.09—9.29 in}
(Reference value)

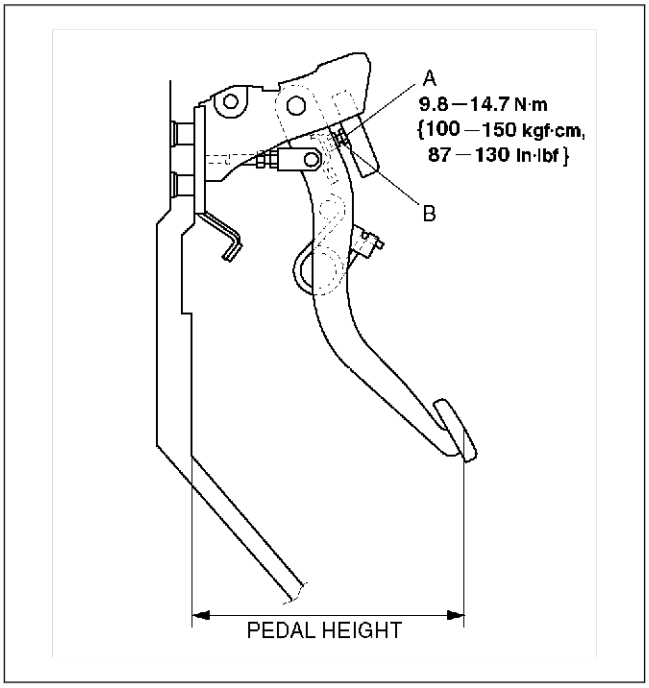

AME4914W002

Clutch Pedal Free Play

1. Depress the clutch pedal by hand until clutch resistance is felt, and measure the pedal free play.
   - If not as specified, adjust the pedal free play by loosening locknut C and turning push rod D as necessary.
   - If necessary replace the clutch pedal.

Pedal free play
5.2—14 mm {0.20—0.55 in}

Push rod free play at clutch pedal
0.1—0.5 mm {0.004—0.02 in}
(Reference value)

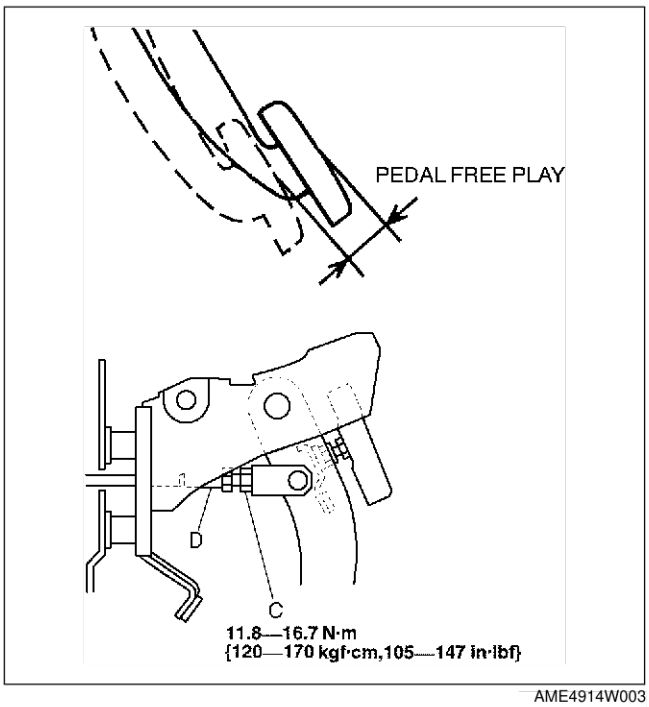

AME4914W003

Clutch Pedal Disengagement Point

1. Apply the parking brake and fix the front and rear of the wheels with the wheel chocks.
2. Start the engine and maintain at idle.
3. Without depressing the clutch pedal, move the shift lever slowly to the reverse position.
4. Hold the lever at the point where the gear noise is heard.
5. Depress the clutch pedal slowly.
6. Hold the pedal at the point where the gear noise stops (clutch pedal disengagement point).

7. Measure distance A (the distance from the clutch pedal disengagement point to the fully depressed position) and the pedal stroke.
8. Verify that they are within specification.
   - If distance A or the pedal stroke is out of specification, adjust the pedal height or the clutch pedal free play to specification.
   - If necessary replace the clutch pedal.

Clutch pedal disengagement stroke
23—43 mm {0.91—1.69 in}

Pedal stroke
148 mm {5.83 in} (Reference value)

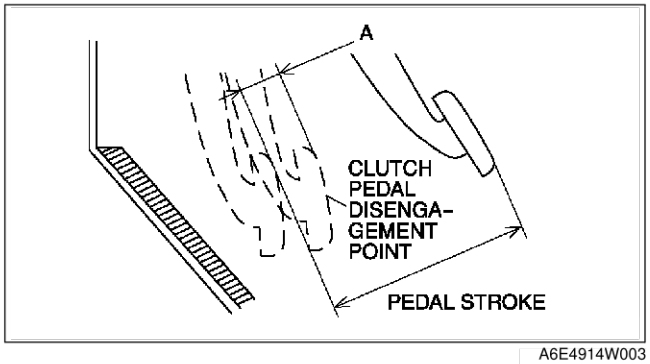

A6E4914W003

End Of Sie

CLUTCH PEDAL REMOVAL/INSTALLATION

AME491441030W02

1. Remove the air cleaner. (L.H.D. models)
2. Remove the battery. (L.H.D. models)
3. Remove in the order indicated in the table.
4. Install in the reverse order of removal.
5. After installation, adjust the clutch pedal. (See H–4 CLUTCH PEDAL INSPECTION/ADJUSTMENT.)

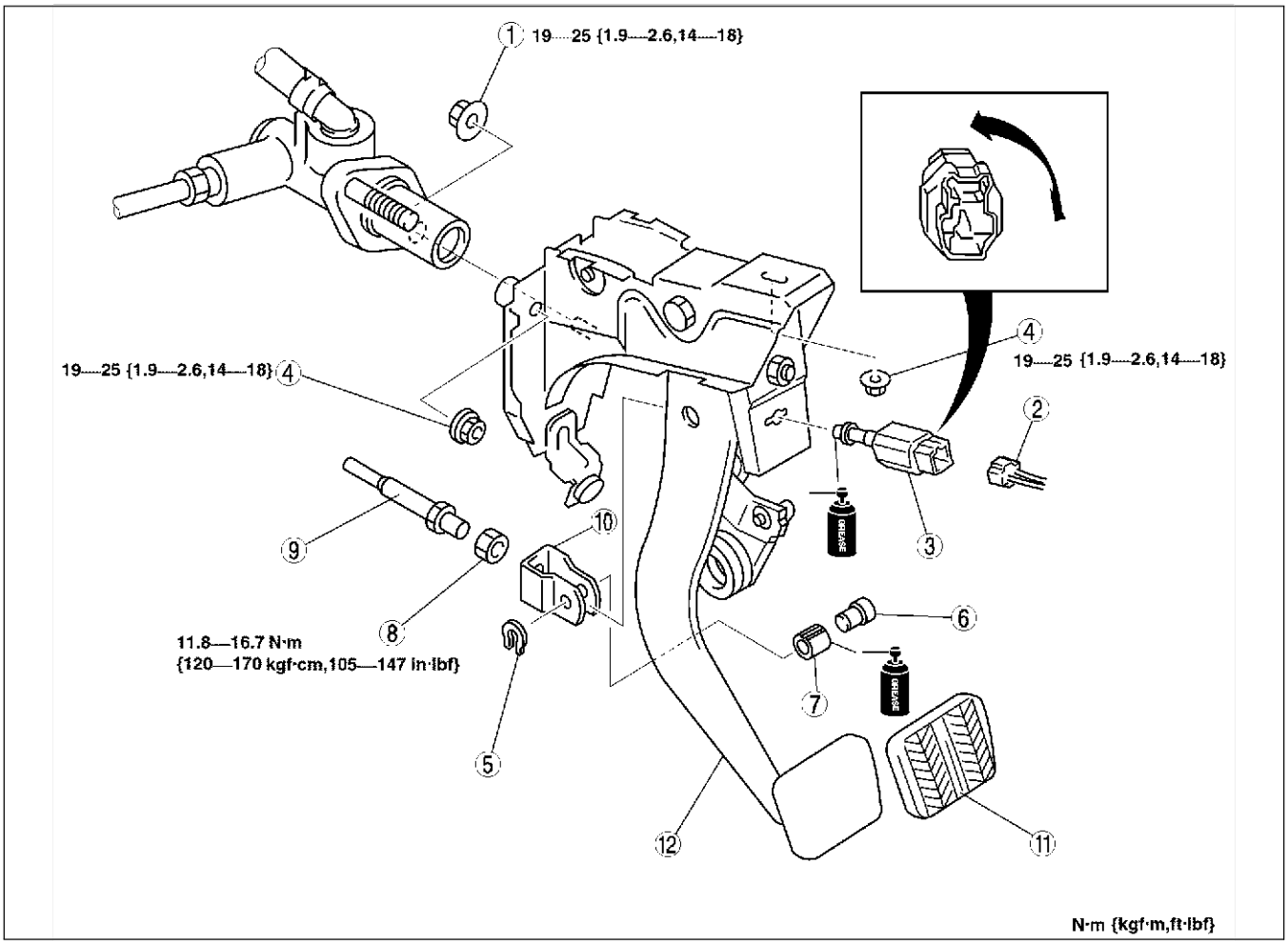

AME4914W001

1	Nut
2	Clutch switch connector
3	Clutch switch
4	Nut
5	E-clip
6	Pin

7	Bushing
8	Nut
9	Push rod
10	Clevis
11	Pedal pad
12	Clutch pedal (See H–6 Clutch Pedal Installation Note.)

Clutch Pedal Installation Note

1. After installation, adjust the pedal height and free play. (See H–4 CLUTCH PEDAL INSPECTION/ADJUSTMENT.)

End Of Sie

CLUTCH MASTER CYLINDER

CLUTCH MASTER CYLINDER REMOVAL/INSTALLATION

AME491641990W01

1. Remove the air cleaner. (L.H.D. models)
2. Remove the battery. (L.H.D. models)
3. Remove in the order indicated in the table.
4. Plug the clutch pipe after removing it to avoid leakage.
5. Install in the reverse order of removal.

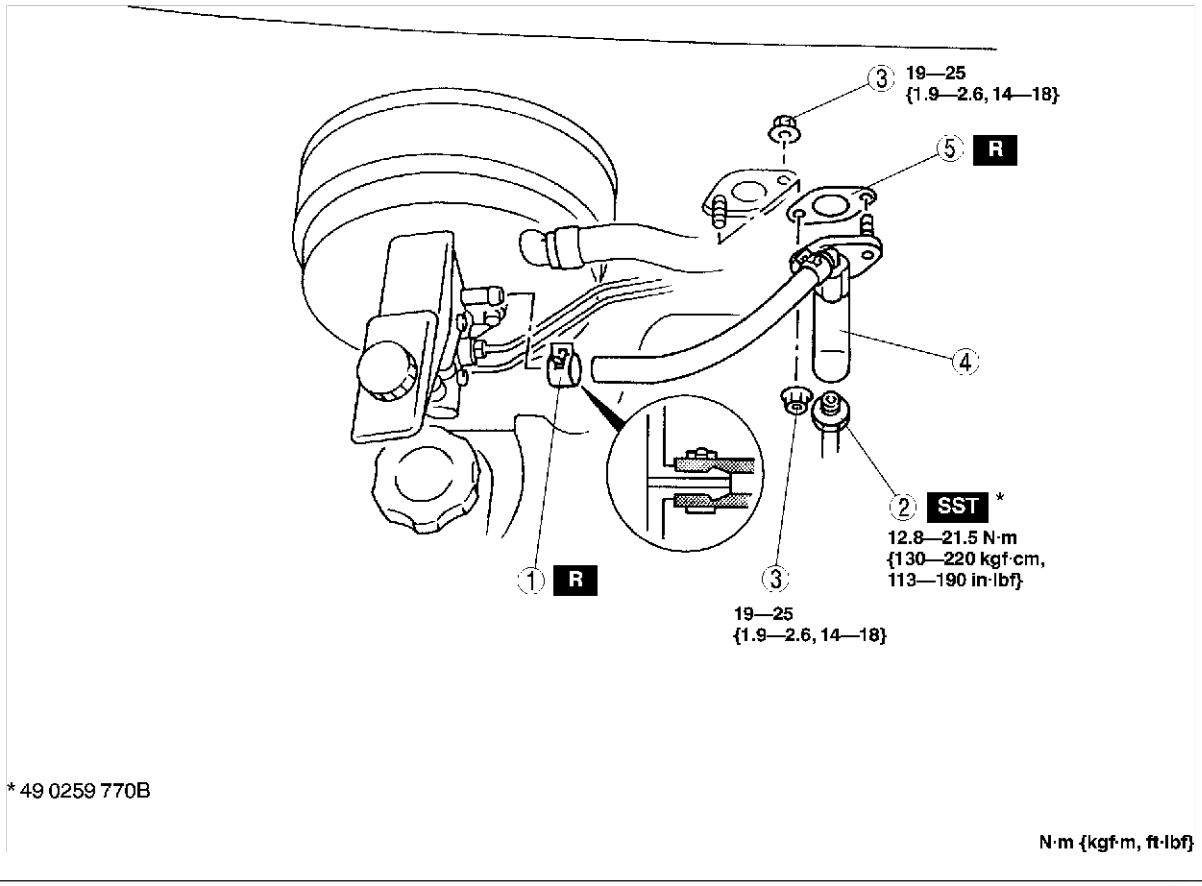

XME4916W001

1	Clip
2	Clutch pipe
3	Nut

4	Clutch master cylinder
5	Gasket

End Of Sie

CLUTCH MASTER CYLINDER DISASSEMBLY/ASSEMBLY

AME491641990W02

1. Disassemble in the order indicated in the table.
2. Assemble in the reverse order of disassembly.

L3 engine model

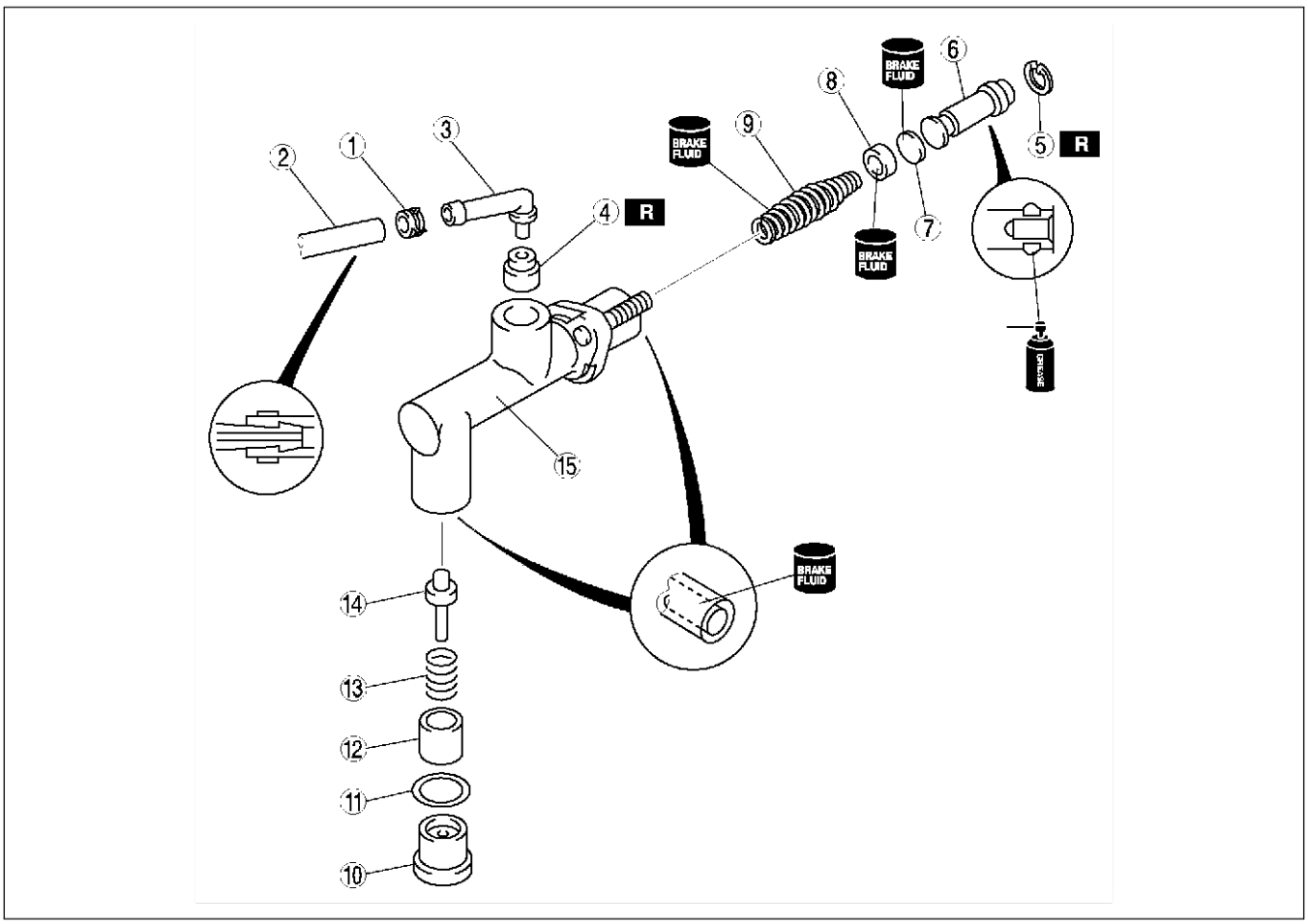

AME4916W001

1	Clip
2	Hose
3	Joint
4	Bushing
5	Snap ring (See H–7 Snap Ring Disassembly/Assembly Note.)
6	Piston and secondary cap component
7	Spacer

8	Primary cap
9	Return spring
10	Bolt
11	Gasket
12	One-way valve piston
13	One-way valve spring
14	One-way valve pin
15	Clutch master cylinder body

Snap Ring Disassembly/Assembly Note

1. Hold the piston down using a cloth-wrapped pin punch.
   - If disassembling, remove the snap ring; if assembling, install it.

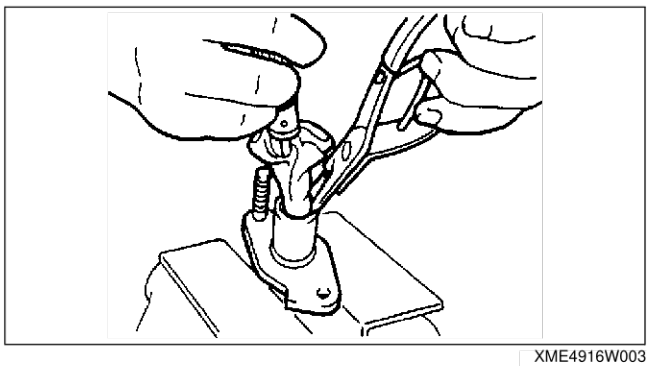

XME4916W003

End Of Sie

CLUTCH RELEASE CYLINDER

CLUTCH RELEASE CYLINDER REMOVAL/INSTALLATION

AME491841920W01

1. Remove the splash shield.
2. Remove in the order indicated in the table.
3. Install in the reverse order of removal.

G15M-R manual transaxle models

1	Clutch pipe
2	Bolt
3	Clutch release cylinder

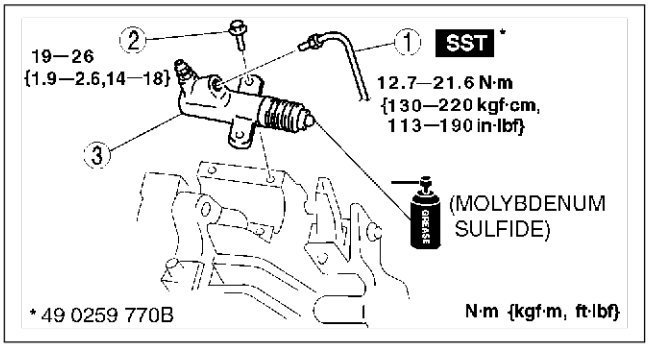

AME4918W002

A65M-R manual transaxle models

1	Clutch pipe
2	Bolt
3	Clutch release cylinder

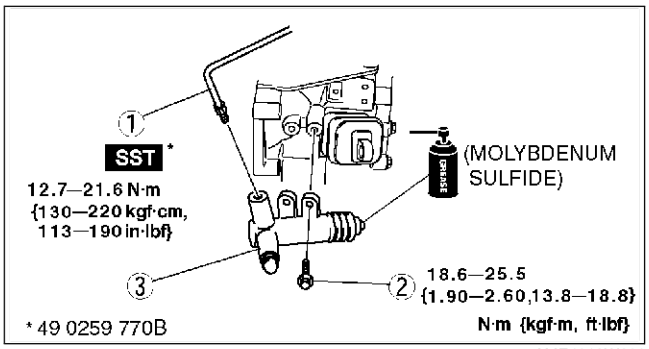

AME4918W200

End Of Sie

CLUTCH RELEASE CYLINDER DISASSEMBLY/ASSEMBLY

AME491841920W02

1. Disassemble in the order indicated in the table.
2. Assemble in the reverse order of disassembly.

G15M-R manual transaxle models

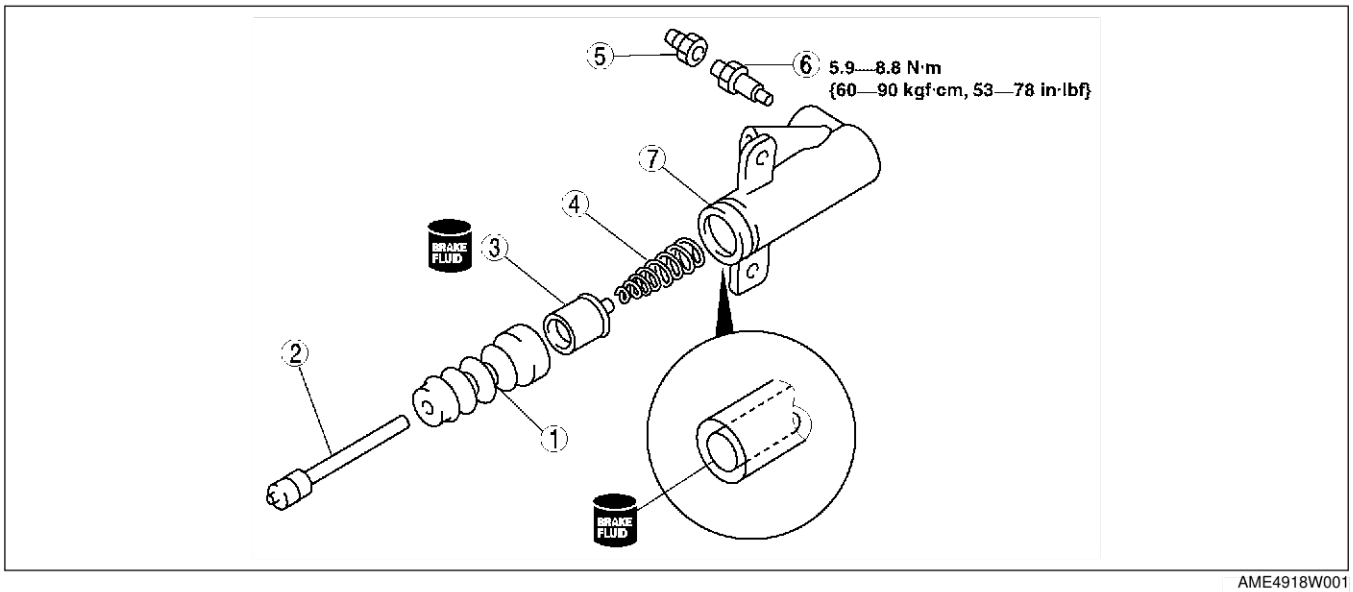

AME4918W001

A65M-R manual transaxle models

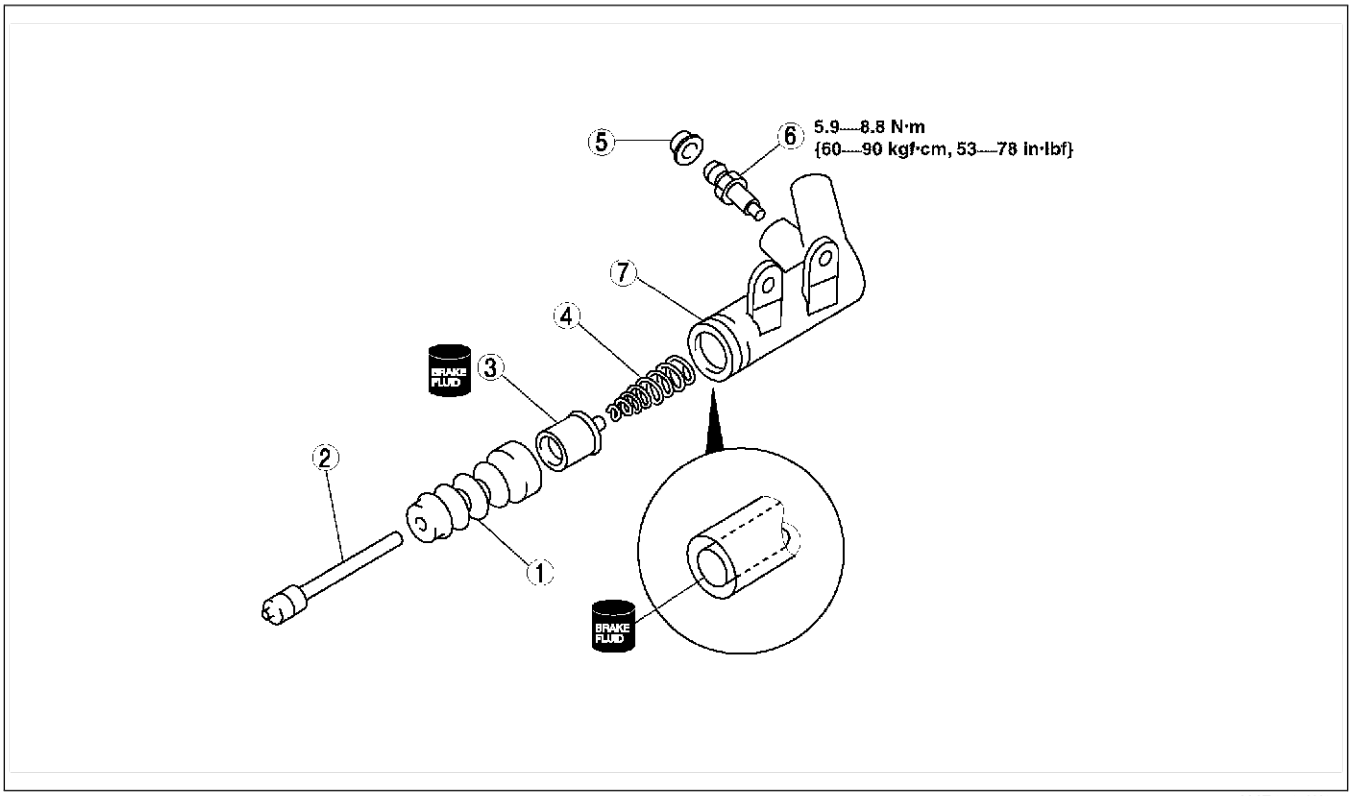

AME4918W101

1	Boot
2	Push rod
3	Piston and cap
4	Return spring

5	Bleeder cap
6	Bleeder screw
7	Release cylinder body

End Of Ste

H

CLUTCH UNIT

CLUTCH UNIT REMOVAL/INSTALLATION

AME492016000W01

1. Remove in the order indicated in the table.
2. Install in the reverse order of removal.

G15M-R manual transaxle models

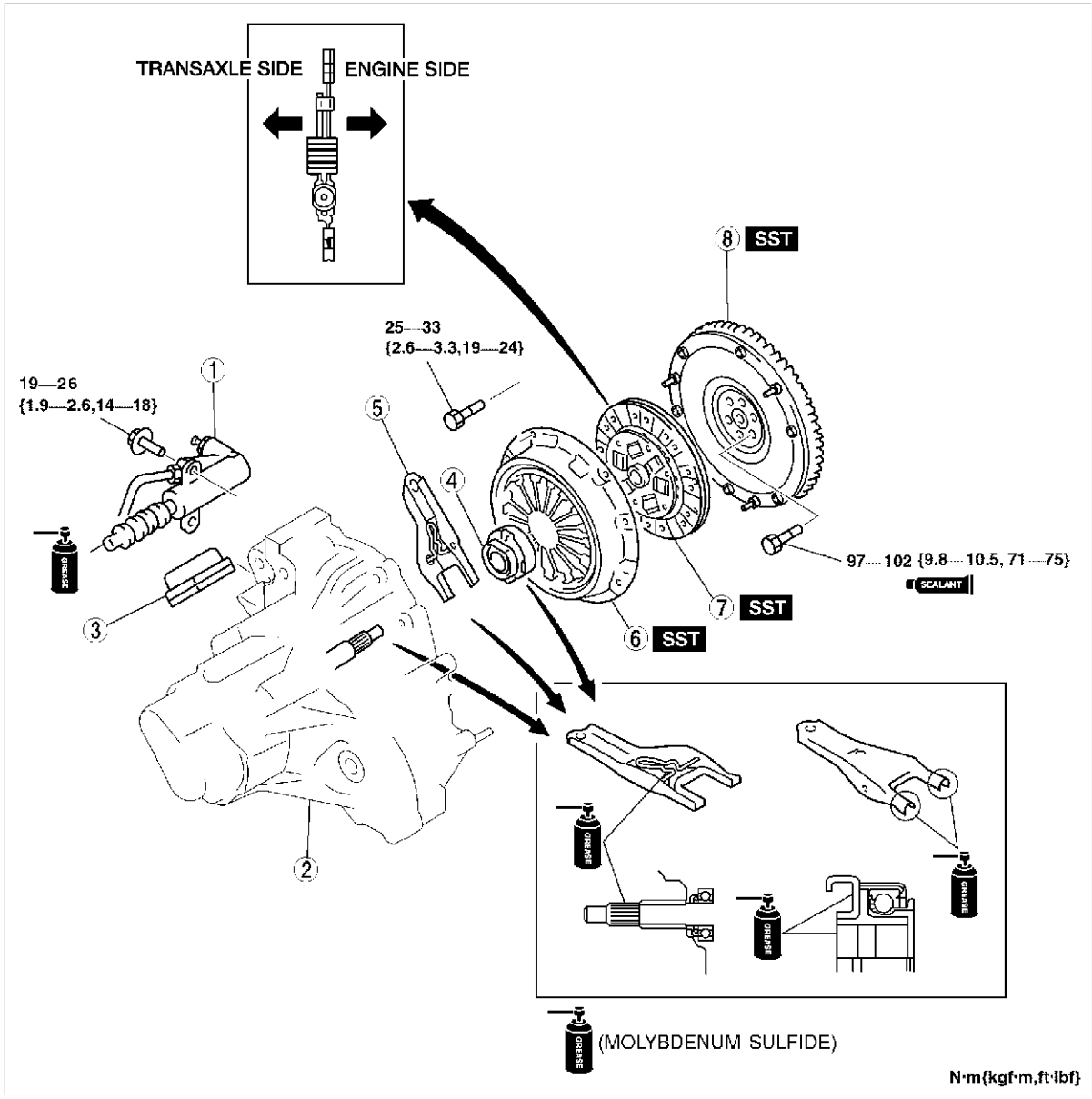

AME4920W001

A65M-R manual transaxle models

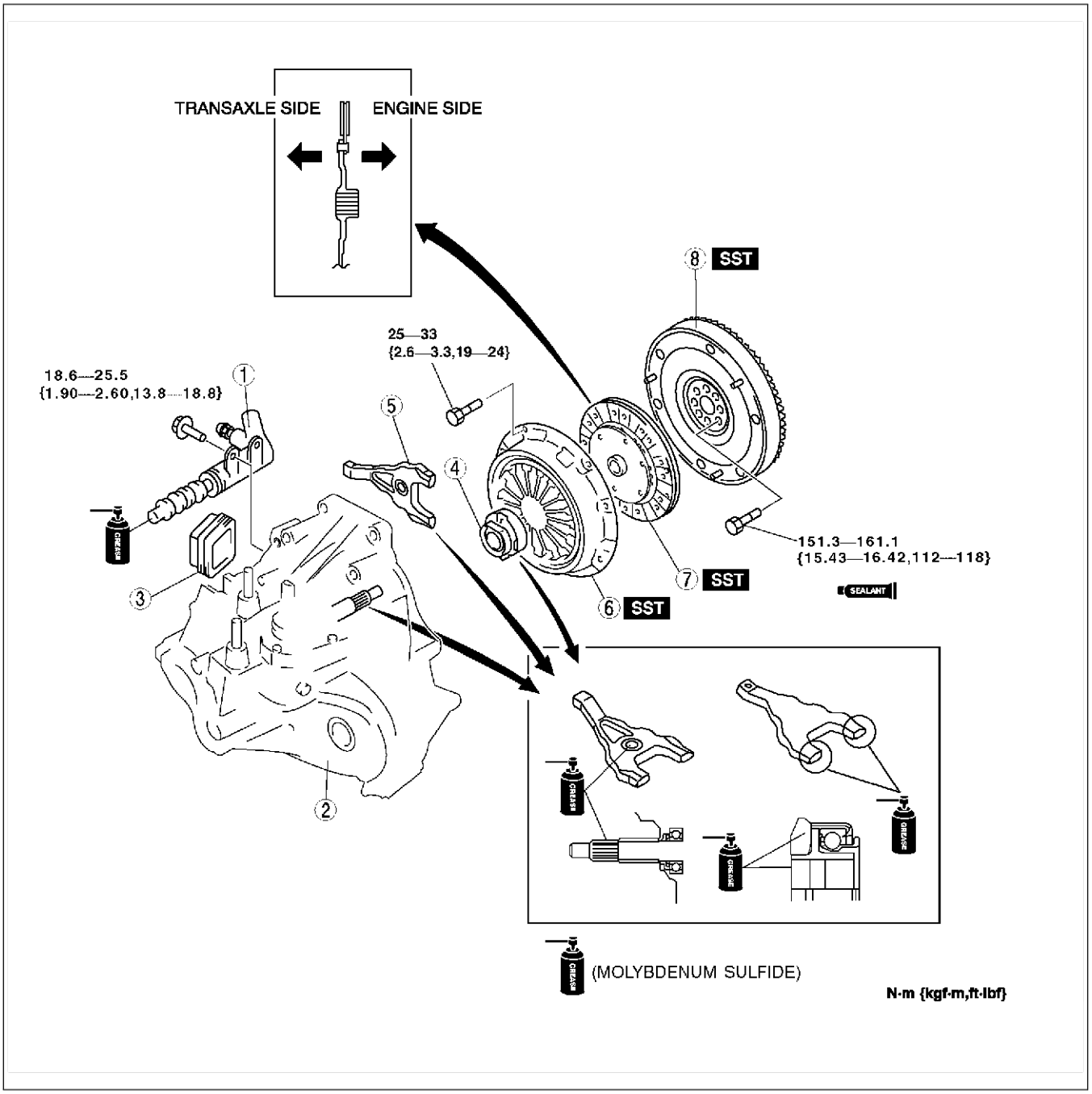

AME4920W102

1	Clutch release cylinder
2	Manual transaxle (See J1–4 MANUAL TRANSAXLE REMOVAL/ INSTALLATION.)
3	Boot
4	Clutch release collar
5	Clutch release fork

6	Clutch cover (See H–12 Clutch Cover and Disc Removal Note.) (See H–13 Clutch Cover Installation Note.)
7	Clutch disc (See H–12 Clutch Cover and Disc Removal Note.) (See H–13 Clutch Disc Installation Note.)
8	Flywheel (See H–12 Flywheel Removal Note.) (See H–12 Flywheel Installation Note.)

H

Clutch Cover and Disc Removal Note

1. Install the **SSTs**.
2. Loosen each bolt one turn at a time in a crisscross pattern until spring tension is released.
3. Remove the clutch cover and disc.

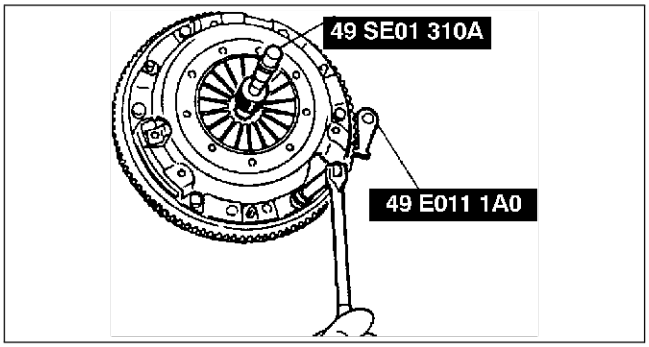

XME4920W002

Flywheel Removal Note

1. Hold the flywheel using the **SST**.
2. Remove the bolts evenly and gradually in a crisscross pattern.
3. Remove the flywheel.

G15M-R manual transaxle models

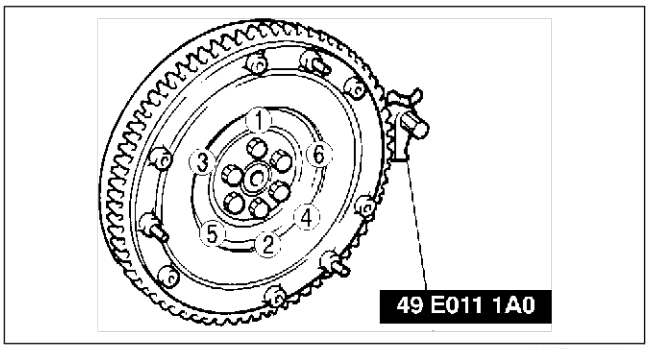

XME4920W004

A65M-R manual transaxle models

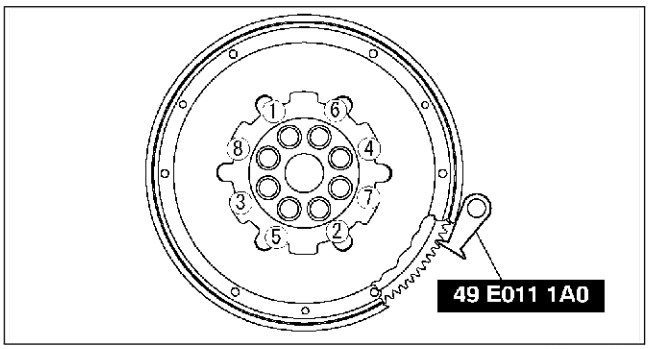

AME4920W100

Flywheel Installation Note

1. Install the flywheel to the crankshaft.
2. When reusing the bolts, clean threads and hole, then apply locking compound to the threads.

   Note
   - No locking compound is needed when using new bolts.

3. Hand-tighten the flywheel lock bolts.
4. Install the **SST** to the flywheel.
5. Gradually tighten the flywheel lock bolts in a crisscross pattern.

G15M-R manual transaxle models

Tightening torque
97—102 N·m {9.8—10.5 kgf·m, 71—75 ft·lbf}

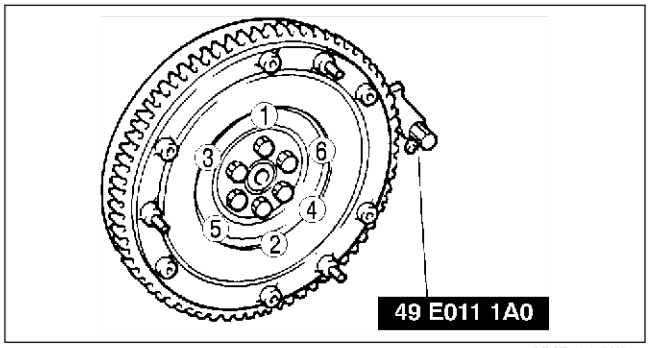

XME4920W005

A65M-R manual transaxle models

Tightening torque
151.3—161.1 N·m
{15.43—16.42 kgf·m, 112—118 ft·lbf}

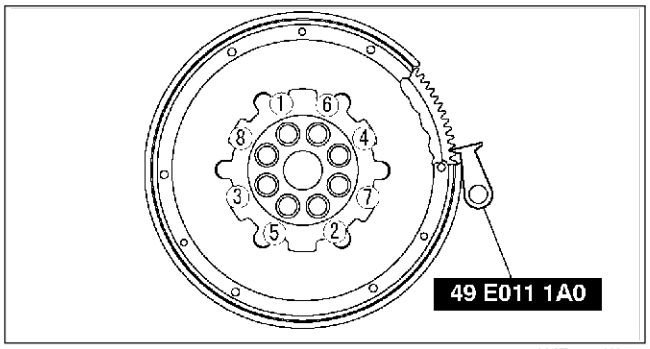

AME4920W101

Clutch Disc Installation Note
1. Hold the clutch disc position using the **SST**.

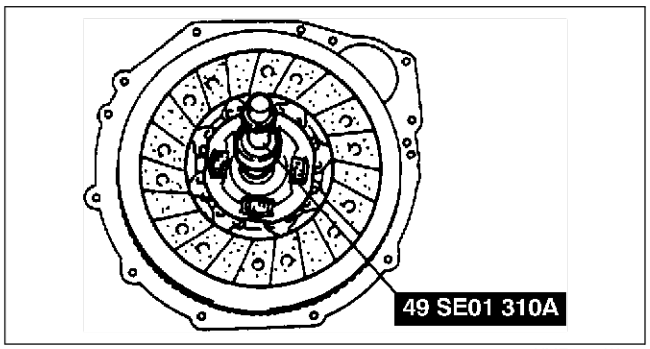

XME4920W008

Clutch Cover Installation Note
1. Install the **SSTs**.
2. Tighten the bolts evenly and gradually in a crisscross pattern.

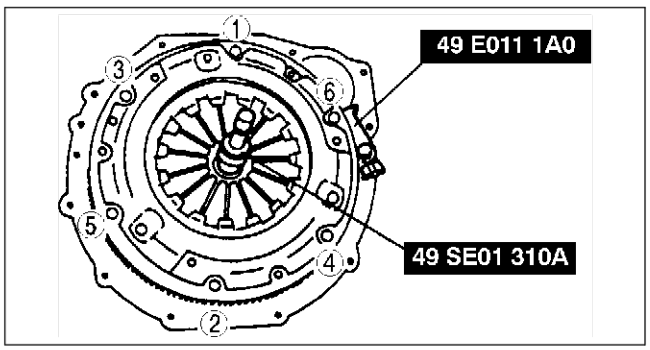

XME4920W009

End Of Sie

CLUTCH COVER INSPECTION

AME492016410W01

1. Measure the wear of the diaphragm spring fingers.
   - If not as specified, replace the clutch cover.

   Depth
   0.6 mm {0.024 in} max.

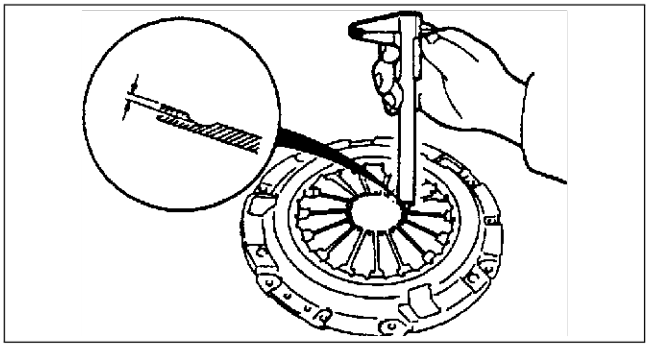

XME4920W010

2. Measure the flatness of the pressure plate with a straight edge and a feeler gauge.
   - If not as specified, replace the clutch cover.

   Maximum clearance
   0.3 mm {0.012 in}

3. When checking the diaphragm spring fingers, mount a dial indicator on the cylinder block.

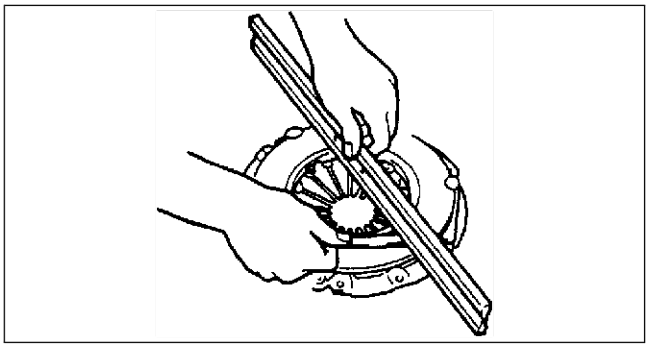

XME4920W011

4. Rotate the flywheel and check for misaligned diaphragm spring fingers.
   - If not as specified, replace the clutch cover.

   Misalignment
   0.6 mm {0.024 in} max.

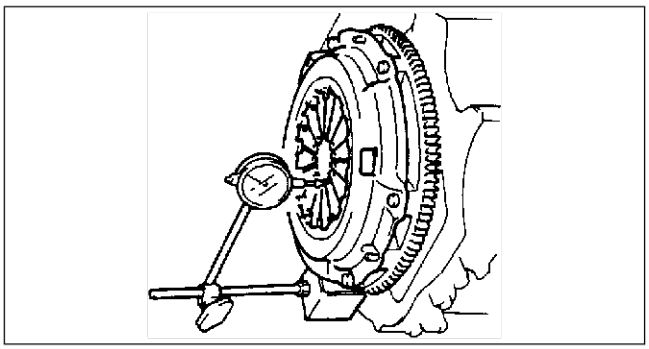

XME4920W012

End Of Sie

FLYWHEEL

FLYWHEEL INSPECTION

AME492211500W01

1. Install a dial gauge on the cylinder block.
2. Measure the flywheel runout using a dial indicator.
   - If the runout is excessive, replace the flywheel.

   Runout
   G15M-R manual transaxle models
   0.1 mm {0.004 in} max.
   A65M-R manual transaxle models
   0.3 mm {0.012 in} max.

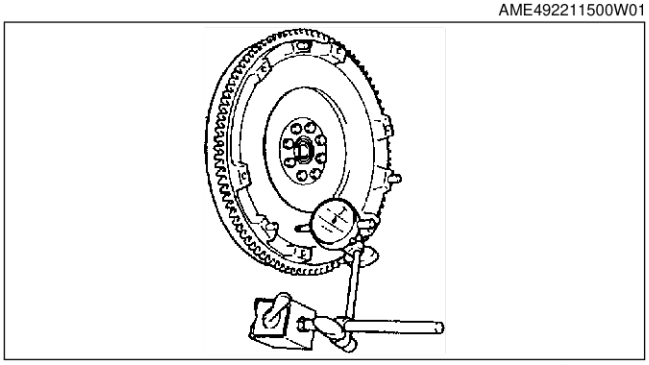

XME4922W001

End Of Sie

MANUAL TRANSAXLE [G15M-R]

FEATURES

OUTLINE J1-2
OUTLINE OF CONSTRUCTION..... J1-2
FEATURES J1-2
SPECIFICATIONS J1-2

SERVICE

OUTLINE J1-3
SUPPLEMENTAL SERVICE INFORMATION ... J1-3
MANUAL TRANSAXLE..... J1-4
MANUAL TRANSAXLE REMOVAL/
INSTALLATION..... J1-4

OUTLINE

OUTLINE OF CONSTRUCTION

AME510201029W01

- The construction and operation of the manual transaxle is the same as those of the current G15M-R type manual transaxle, except for the following features. (See MPV Training Manual 3340-1*-99F.)

End Of Sie

FEATURES

AME510201029W02

Adoption of the L3 engine models

- The specification for the L3 engine models has been added.

Improved serviceability

- Abolition of a No.1 engine mount bracket and No.1 engine mount bracket stay.

End Of Sie

SPECIFICATIONS

AME510201029W05

Item			New MPV (LW)	Previous MPV (LW)
Transaxle type			G15M-R	
Transaxle control			Floor-shift	
Operation system			Rod	
Shift assist	Forward		Synchromesh	
	Reverse		Selective sliding and synchromesh	
Gear ratio	1st		3.307	
	2nd		1.842	
	3rd		1.310	
	4th		0.970	
	5th		0.755	
	Reverse		3.166	
Final gear ratio			4.588	
Oil	Grade		API service GL-4 or GL-5	
	Viscosity	All season	SAE 75W-90	
		Above 10°C {50°F}	SAE 80W-90	
	Capacity (approximate quantity) (L {US qt, Imp qt})		2.70 {2.85, 2.38}	

End Of Sie

OUTLINE

SUPPLEMENTAL SERVICE INFORMATION

AME510201029W04

- The following changes have been made since publication of the Mazda MPV Workshop Manual (1666-1*-99F).

Manual transaxle

- Removal/installation procedure has been modified.

End Of Sta

MANUAL TRANSAXLE

MANUAL TRANSAXLE REMOVAL/INSTALLATION

AME511201029W01

1. Remove the battery, and battery tray.
2. Remove the air cleaner component.
3. Remove the wheels and tires and splash shields.
4. Remove the starter. (See G–18 STARTER REMOVAL/INSTALLATION.)
5. Drain the transaxle oil into a container.
6. Remove in the order indicated in the table.
7. Install in the reverse order of removal.
8. Add the specified amount of the specified transaxle oil. (See Section J.)
9. Warm up the engine and transaxle, inspect for the oil leakage, and inspect the transaxle operation.

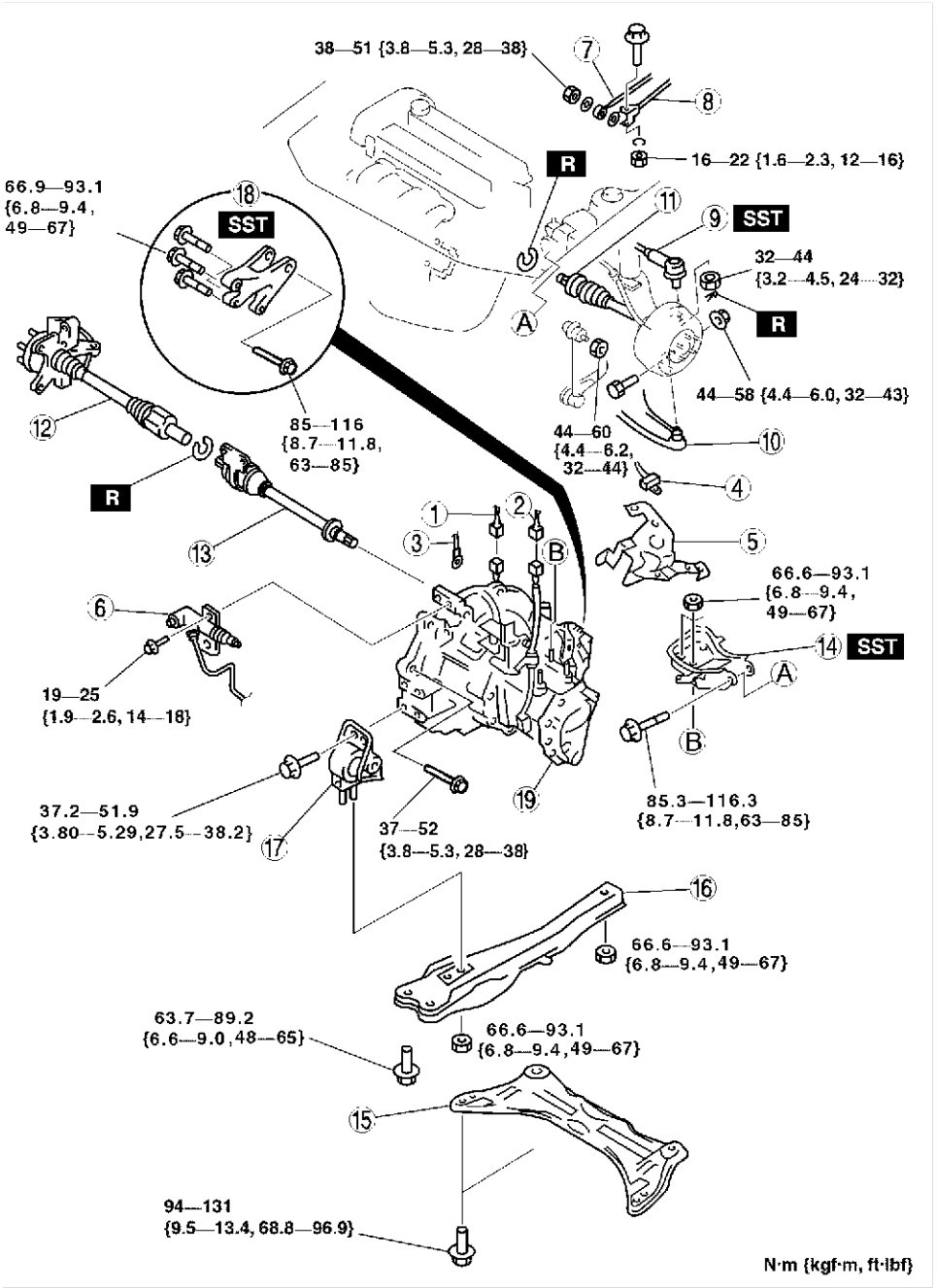

AME5112W004

1	Neutral switch connector
2	Back-up light switch connector
3	GND

4	GND
5	Harness bracket
6	Clutch release cylinder

7	Extension bar
8	Change control rod
9	Tie-rod end ball joint
10	Lower arm ball joint (See J1–5 Lower Arm Ball Joint Removal Note)
11	Drive shaft (See M–18 DRIVE SHAFT (L3) REMOVAL/ INSTALLATION)
12	Drive shaft (See M–18 DRIVE SHAFT (L3) REMOVAL/ INSTALLATION)

13	Joint shaft (See M–4 JOINT SHAFT (L3) REMOVAL/ INSTALLATION)
14	No.4 engine mount bracket (See J1–5 No.4 Engine Mount Bracket Removal Note)
15	Transverse member
16	Engine mounting member
17	No.2 engine mount (See J1–6 No.1 Engine Mount Bracket Installation Note)
18	No.1 engine mount (See J1–6 No.1 Engine Mount Bracket Installation Note)
19	Manual transaxle (See J1–6 Manual Transaxle Removal Note) (See J1–6 Manual Transaxle Installation Note)

Lower Arm Ball Joint Removal Note

Caution

- **Wrap a rag around the ball joint dust seal to protect it from getting damaged.**

1. Ply the lower arm out of the knuckle.

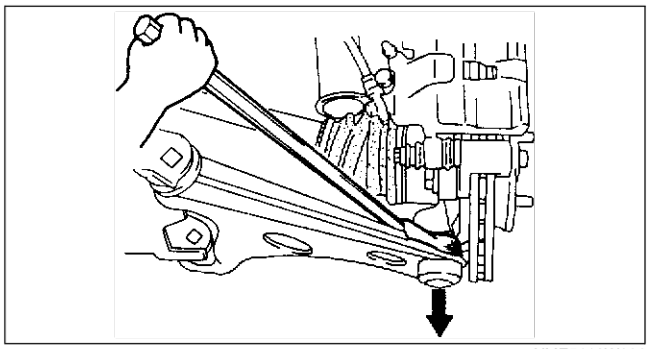

XME5112W006

No.4 Engine Mount Bracket Removal Note

1. Remove the harness.
2. Support the engine using the **SST** before removing the No.4 engine mount bracket.
3. Remove the No.4 engine mount bracket.

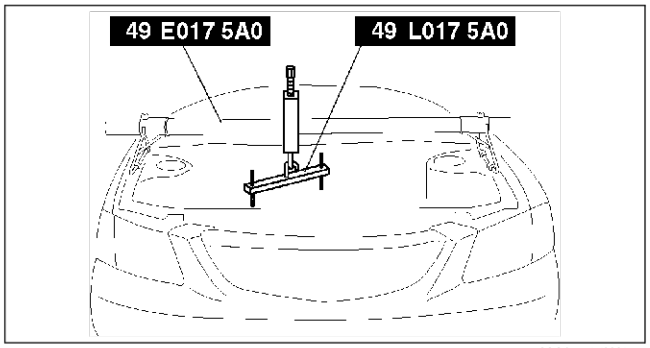

AMJ5614W106

J1

Manual Transaxle Removal Note

1. Loosen the **SST** (49 G017 5A0) and lean the engine toward the transaxle.
2. Support the transaxle on a jack.
3. Remove the transaxle mounting bolts.
4. Remove the transaxle.

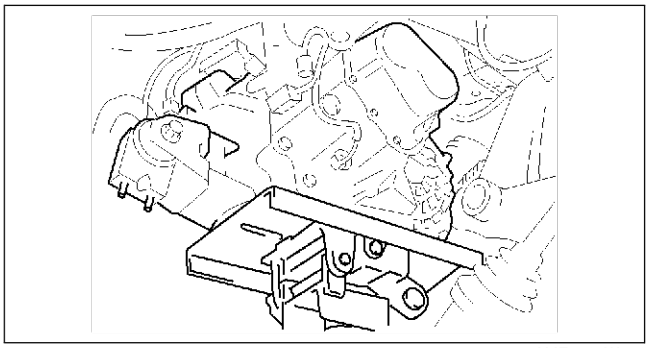

AME5112W001

Manual Transaxle Installation Note

1. Set the transaxle on a jack and lift into place.
2. Install the transaxle mounting bolts.

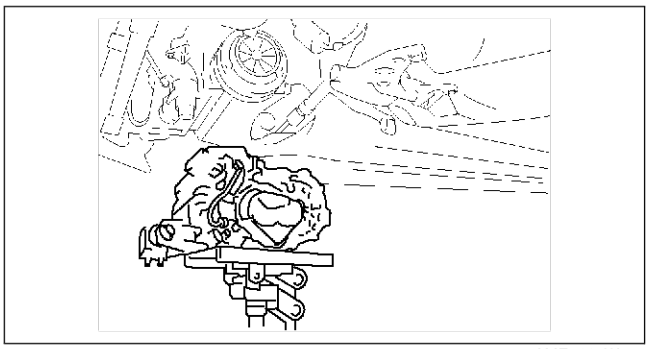

AME5112W002

No.1 Engine Mount Bracket Installation Note

Caution

- **Misaligning the bolts will cause damage to the bolt holes.**

1. Use the **SST** (engine support) to make sure the transaxle bolt holes and engine mount No.1 meet evenly.
2. After the 3 bolts are set in the holes, tighten the bolts to the specified torque.

Tightening torque
66.9—93.1 N·m
{6.8—9.4 kgf·m, 49—67 ft·lbf}

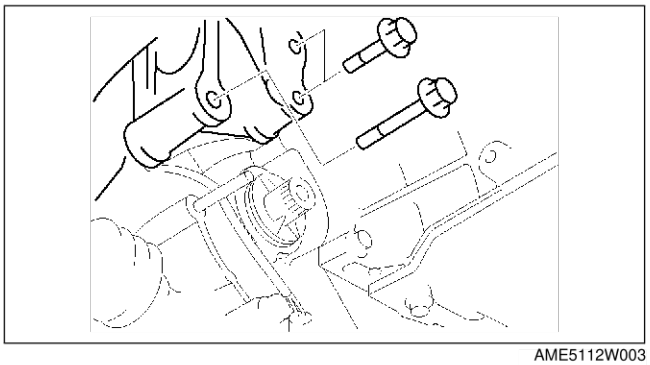

AME5112W003

No.2 Engine Mount Installation Note

1. Verify that the engine mount rubbers are installed as shown.
2. Install the engine mount to the transaxle.
3. Put the No.2 engine mount stud bolts in the installation holes when installation holes when installing the engine mounting member.
4. Tighten the bolt A and nut B.

Tightening torque
A: 63.7—89.2 N·m
{6.6—9.0 kgf·m, 48—65 ft·lbf}
B: 66.6—93.1 N·m
{6.8—9.4 kgf·m, 49—67 ft·lbf}

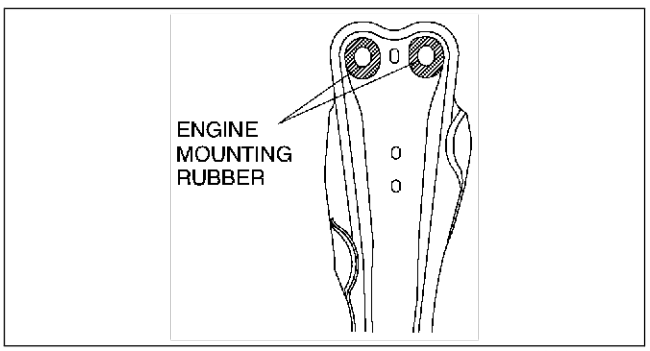

AMU0517W048

5. Tighten the nut C.

   Tightening torque
   66.6—93.1 N·m
   {6.8—9.4 kgf·m, 49—67 ft·lbf}

6. Line up the holes of No.4 engine mount bracket and No.4 engine mount, and install the stud bolts into the holes.

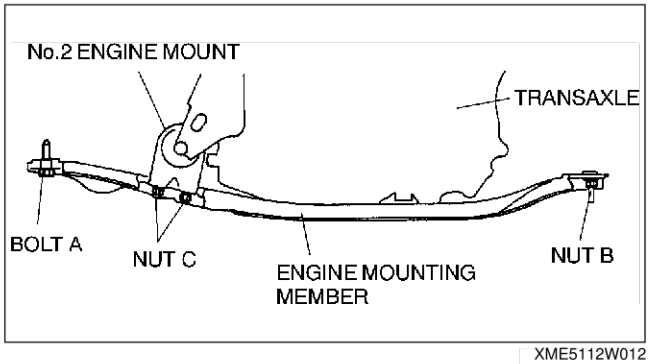

XME5112W012

7. Tighten the nuts in the order indicated in the figure.

   Tightening torque
   66.6—93.1 N·m
   {6.8—9.4 kgf·m, 49—67 ft·lbf}

8. Tighten the stud bolts instead in step 6.

   Tightening torque
   85.3—116.3 N·m
   {8.7—11.8 kgf·m, 63—85 ft·lbf}

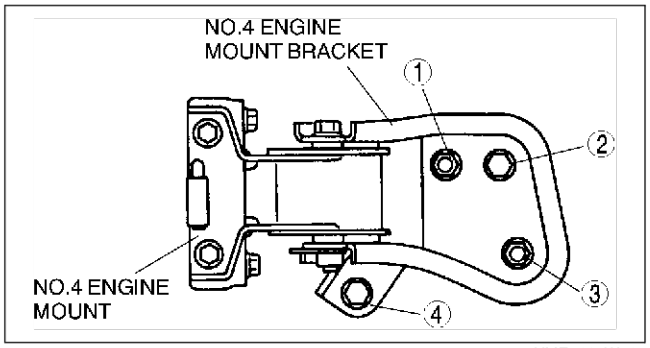

XME5112W013

9. Remove the **SSTs** (49 E017 5A0 and 49 L017 5A0).
10. Loosen the No.2 engine mount stud bolts, and then retighten them.

    Tightening torque
    85.3—116.3 N·m
    {8.7—11.8 kgf·m, 63—85 ft·lbf}

End Of Ste

J1

MANUAL TRANSAXLE [A65M-R]

FEATURES

OUTLINE J2-2
FEATURES J2-2
SPECIFICATIONS J2-2
MANUAL TRANSAXLE J2-3
OUTLINE J2-3
CROSS-SECTIONAL VIEW J2-3
POWER FLOW J2-4

SERVICE

LOCATION INDEX J2-6
MANUAL TRANSAXLE LOCATION INDEX J2-6
MANUAL TRANSAXLE J2-7
TRANSAXLE OIL INSPECTION J2-7
TRANSAXLE OIL REPLACEMENT J2-7
OIL SEAL (DIFFERENTIAL) REPLACEMENT J2-8
REVERSE SWITCH INSPECTION J2-8
REVERSE SWITCH REMOVAL/INSTALLATION J2-9
NEUTRAL SWITCH INSPECTION J2-9
NEUTRAL SWITCH REMOVAL/INSTALLATION J2-10
MANUAL TRANSAXLE REMOVAL/INSTALLATION J2-10
SHIFT MECHANISM J2-15
SHIFT MECHANISM REMOVAL/INSTALLATION J2-15

OUTLINE

FEATURES

AME520201025W01

Improved drivability

- The A65M-R manual transaxle has been adopted for the MZR-CD (RF Turbo) engine model.

End Of Sie

SPECIFICATIONS

AME520201025W02

Item			New MPV (LW)	Previous MPV (LW)
Transaxle type			A65M-R	G15M-R
Transaxle control			Floor-shift	
Operation system			Cable	Rod
Shift assist	Forward		Synchromesh	Synchromesh
	Reverse			Selective sliding and synchromesh
Gear ratio	1st		3.416	3.307
	2nd		1.789	1.842
	3rd		1.193	1.310
	4th		0.902	0.970
	5th		0.659	0.755
	Reverse		3.252	3.166
Final gear ratio			4.133	4.588
Oil	Grade		API service GL-4 or GL-5	
	Viscosity	All season	SAE 75W-90	
		Above 10°C {50°F}	SAE 75W-90	SAE 80W-90
	Capacity (approximate quantity) (L {US qt, Imp qt})		2.30 {2.4, 2.0}	2.70 {2.85, 2.38}

Bold frames:New specifications

End Of Sie

MANUAL TRANSAXLE

OUTLINE

AME521201030W01

- The new A65M-R manual transaxle has been adopted.
  — A cable type operation system has been adopted.
  — A constant mesh type shift assist has been adopted.

End Of Sie

CROSS-SECTIONAL VIEW

AME521201030W02

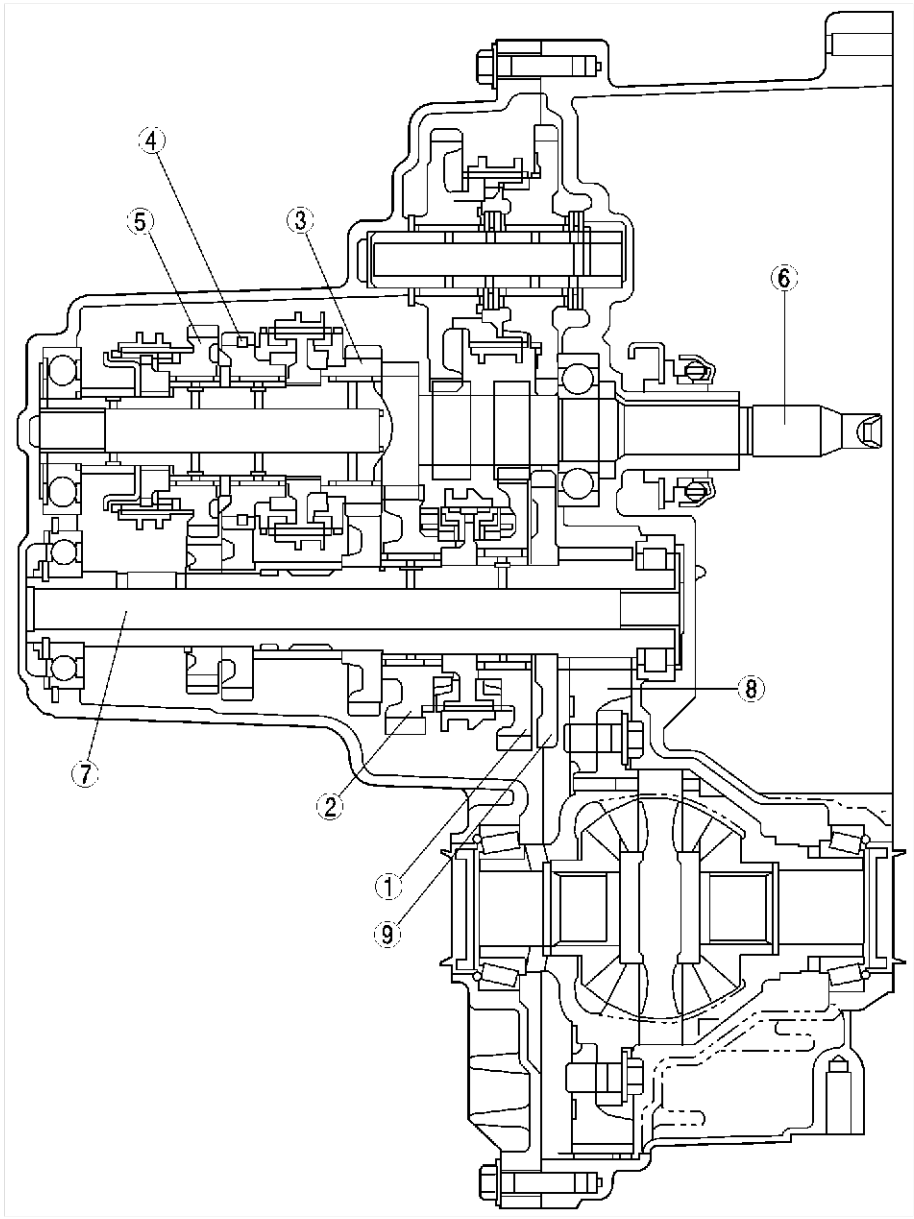

AME5212W011

1	1st gear
2	2nd gear
3	3rd gear
4	4th gear
5	5th gear

6	Primary shaft
7	Secondary shaft
8	Ring gear
9	Reverse gear

End Of Sie

POWER FLOW

AME521201030W03

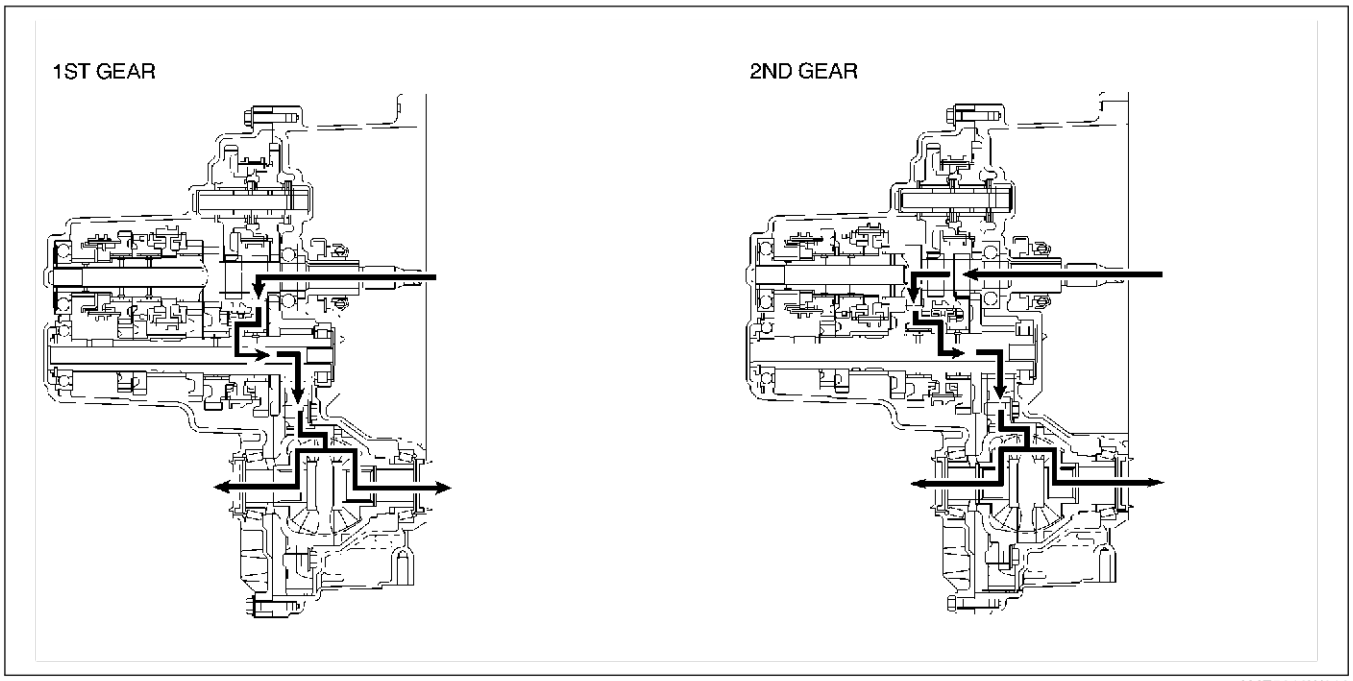

AME5212W012

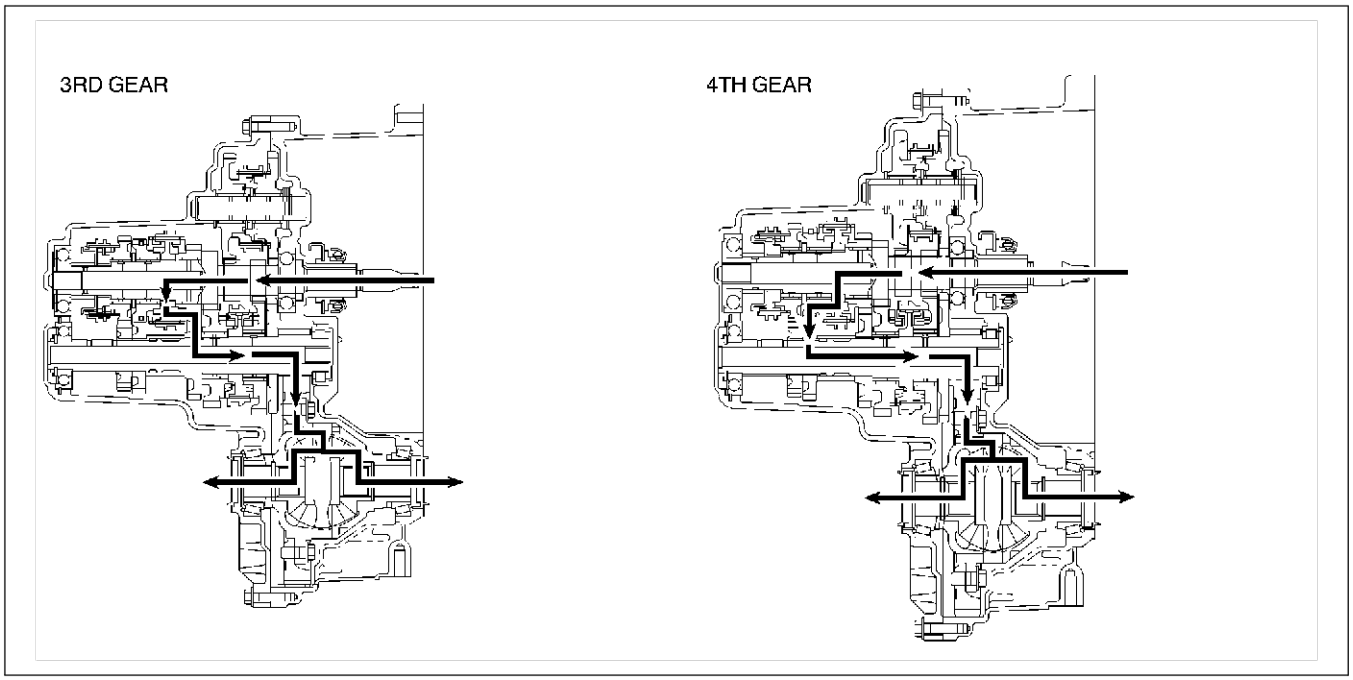

AME5212W013

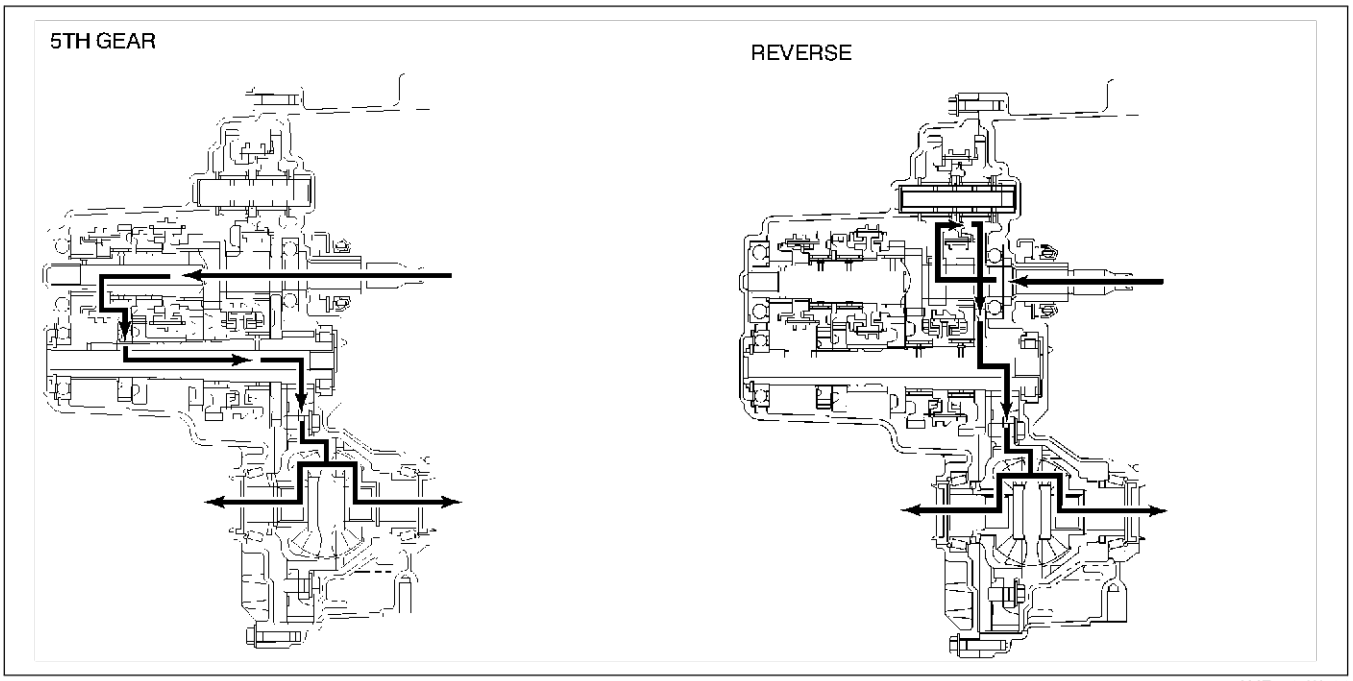

AME5212W014

End Of Sie

LOCATION INDEX

MANUAL TRANSAXLE LOCATION INDEX

AME520001036W01

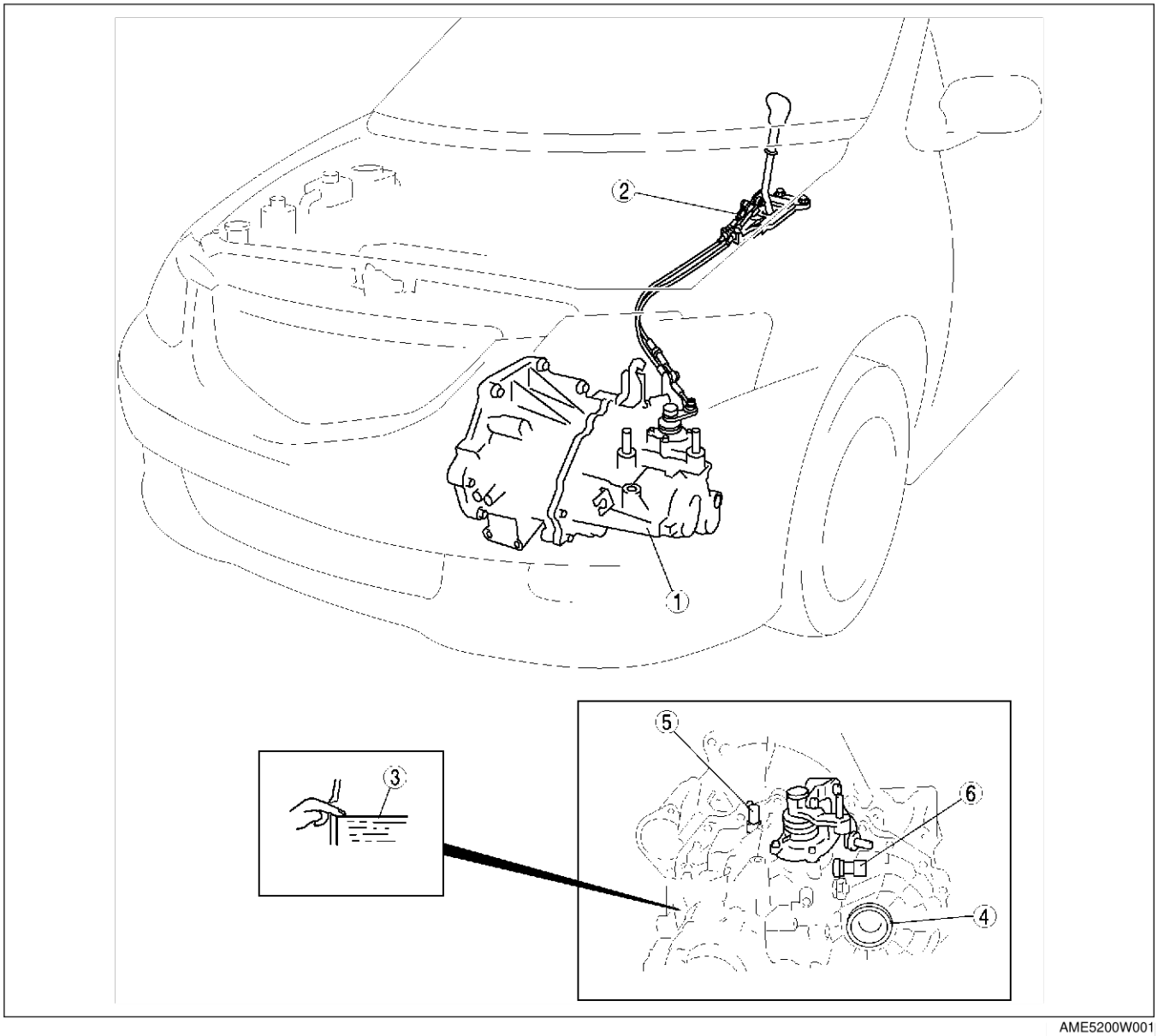

AME5200W001

1	Manual transaxle (See J2–10 MANUAL TRANSAXLE REMOVAL/ INSTALLATION)
2	Shift mechanism (See J2–15 SHIFT MECHANISM REMOVAL/ INSTALLATION)
3	Transaxle oil (See J2–7 TRANSAXLE OIL INSPECTION) (See J2–7 TRANSAXLE OIL REPLACEMENT)

4	Oil seal (differential) (See J2–8 OIL SEAL (DIFFERENTIAL) REPLACEMENT)
5	Reverse switch (See J2–8 REVERSE SWITCH INSPECTION) (See J2–9 REVERSE SWITCH REMOVAL/ INSTALLATION)
6	Neutral switch (See J2–9 NEUTRAL SWITCH INSPECTION) (See J2–10 NEUTRAL SWITCH REMOVAL/ INSTALLATION)

End Of Sie

MANUAL TRANSAXLE

TRANSAXLE OIL INSPECTION

AME521227001W01

1. Park the vehicle on level ground.
2. Remove the filler plug and gasket.
3. Verify that the oil is near the brim of the plug port.
   - If the oil level is low, add the specified amount and type of oil through the filler plug hole.

Specified oil grade
API Service GL-4 or GL-5
Specified oil viscosity
SAE 75W-90

4. Install a new gasket and the filler plug.

Tightening torque
30.0—39.0 N·m
{3.06—3.98 kgf·m, 22.1—28.8 in·lbf}

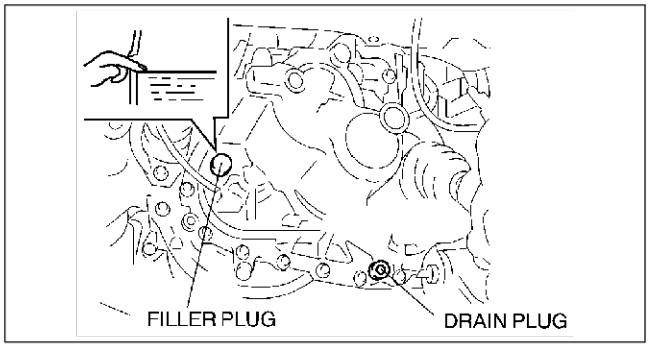

AME5112M003

End Of Sie

TRANSAXLE OIL REPLACEMENT

AME521227001W02

1. Remove the drain plug with the gasket.
2. Drain the oil into a suitable container.
3. Install a new gasket and the drain plug.

Tightening torque
30.0—39.0 N·m
{3.06—3.98 kgf·m, 22.1—28.8 in·lbf}

4. Remove the filler plug with gasket and add the specified amount and type of oil through the filler plug hole until the level reaches the bottom of the filler plug hole.

Specified oil grade
API Service GL-4 or GL-5
Specified oil viscosity
SAE 75W-90
Capacity (approximate quantity)
2.30 L {2.4 US qt, 2.0 Imp qt}

5. Install a new gasket and the filler plug.

Tightening torque
30.0—39.0 N·m {3.06—3.98 kgf·m, 22.1—28.8 in·lbf}

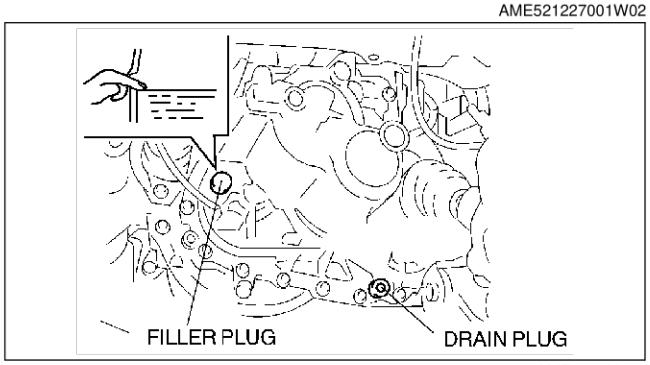

AME5112M003

End Of Sie

OIL SEAL (DIFFERENTIAL) REPLACEMENT

AME521219240W01

1. On level ground, jack up the vehicle and support it evenly on safety stands.
2. Drain the oil from the transaxle.
3. Remove the front wheels and splash shields.
4. Separate the drive shaft and joint shaft from the transaxle. (See M–24 DRIVE SHAFT (MZR-CD (RF TURBO)) REMOVAL/INSTALLATION.) (See M–9 JOINT SHAFT (MZR-CD (RF TURBO)) REMOVAL/INSTALLATION.)
5. Remove the oil seals using a screwdriver.

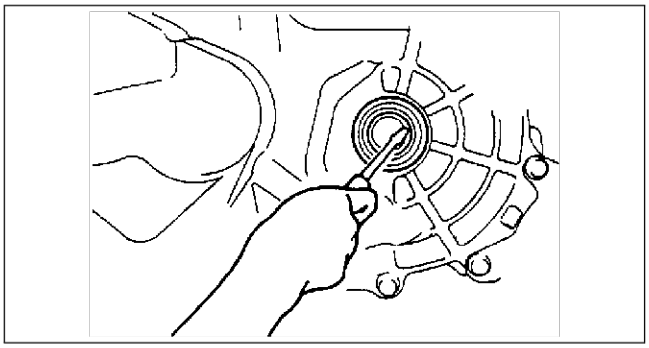

AME5212W005

6. Using the **SSTs** and a hammer, tap each new oil seal in evenly until the **SSTs** contact the transaxle case.
7. Coat the lip of each oil seal with transaxle oil.
8. Insert the drive shaft and joint shaft into the transaxle. (See M–24 DRIVE SHAFT (MZR-CD (RF TURBO)) REMOVAL/INSTALLATION.) (See M–9 JOINT SHAFT (MZR-CD (RF TURBO)) REMOVAL/INSTALLATION.)
9. Install the wheels and splash shields.
10. Add the specified amount and type of oil. (See J2–7 TRANSAXLE OIL REPLACEMENT.)

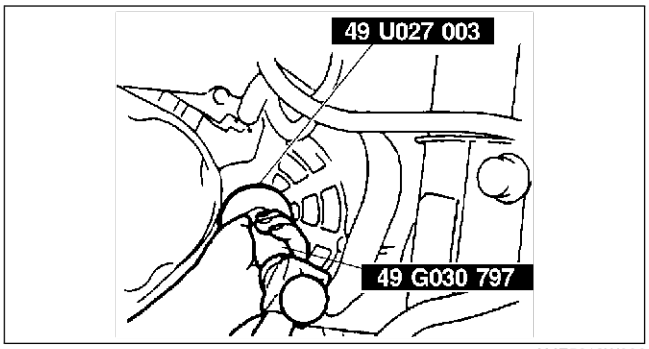

AME5212W006

End Of Sie

REVERSE SWITCH INSPECTION

AME521219010W01

1. Disconnect the reverse switch connector.

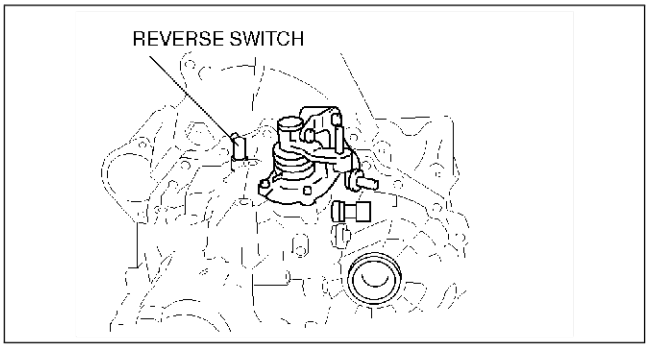

AME5212W020

2. Shift the shift lever to each position, and inspect for continuity between terminals A and B.
   - If not as specified, replace the reverse switch. (See J2–9 REVERSE SWITCH REMOVAL/INSTALLATION.)

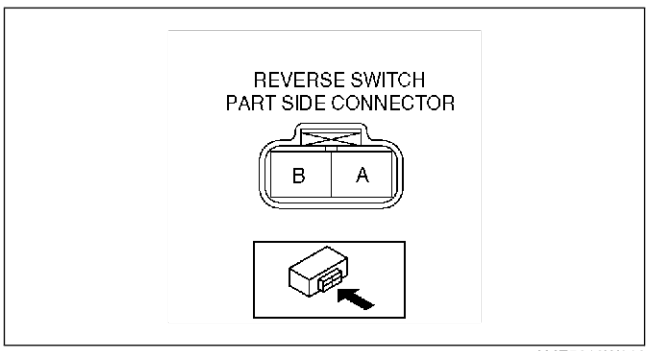

AME5212W018

Specification

O—O : Continuity

Shift position	Connector terminal	
	A	B
Reverse	O	O
Others		

AME5212W015

3. Connect the reverse switch connector.

End Of Sie

REVERSE SWITCH REMOVAL/INSTALLATION

AME521219010W02

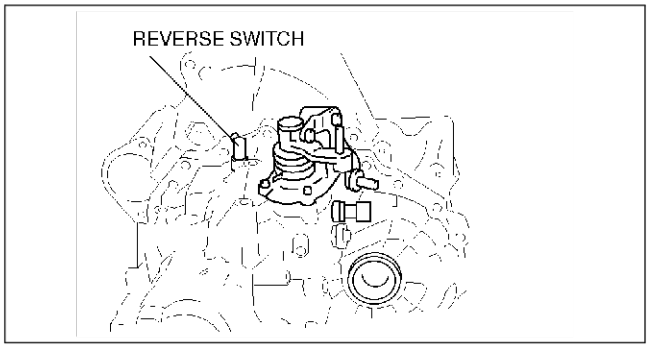

AME5212W020

1. Remove the reverse switch.
2. Apply a light coat of silicone sealant to the screw of the reverse switch.

   Sealant
   Three Bond product: TB1215

3. Install the reverse switch to the transaxle case.

   Tightening torque
   22.5—33.3 N·m
   {2.29—3.40 kgf·m, 16.6—24.6 ft·lbf}

End Of Sie

NEUTRAL SWITCH INSPECTION

AME521219010W03

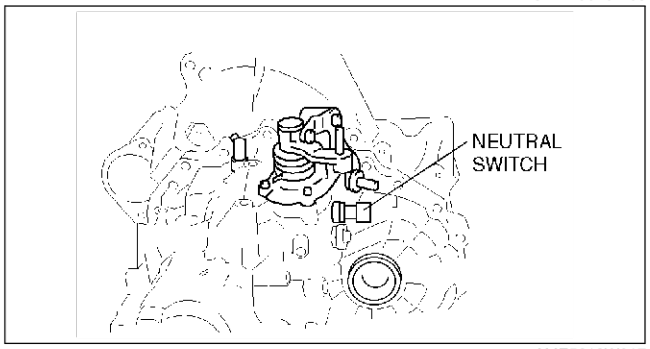

AME5212W017

1. Disconnect the neutral switch connector.

2. Shift the shift lever to each position and neutral, and inspect for continuity between the terminals A and B.
   - If not as specified, replace the neutral switch. (See J2–10 NEUTRAL SWITCH REMOVAL/INSTALLATION.)

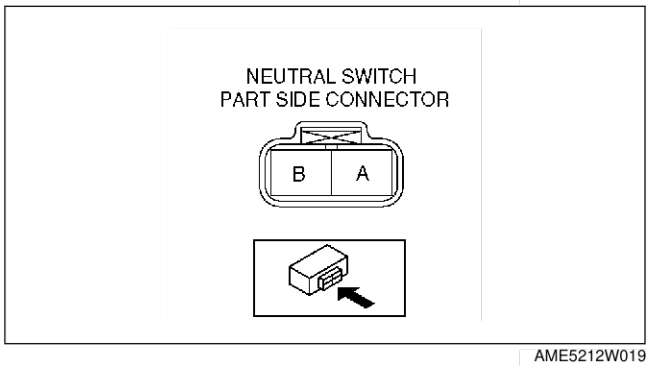

AME5212W019

Specification

O—O : Continuity

Shift position	Connector terminal	
	A	B
Neutral	O	O
Others		

AME5212W016

3. Connect the neutral switch connector.

End Of Sie

J2

NEUTRAL SWITCH REMOVAL/INSTALLATION

AME521219010W04

1. Remove the neutral switch.
2. Apply a light coat of silicone sealant to the screw of the neutral switch.

   Sealant
   Three Bond product: TB1215

3. Install the neutral switch to the transaxle case.

   Tightening torque
   22.5—33.3 N·m
   {2.29—3.40 kgf·m, 16.6—24.6 ft·lbf}

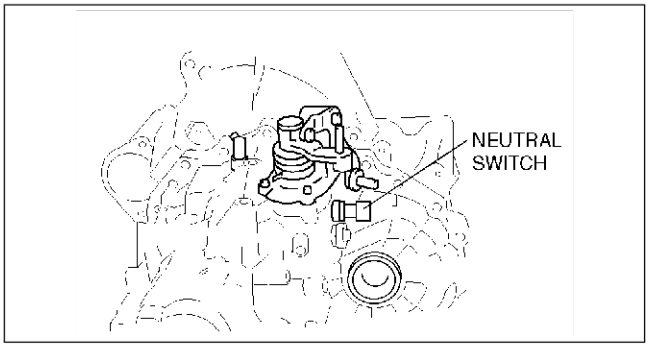

AME5212W017

End Of Sie

MANUAL TRANSAXLE REMOVAL/INSTALLATION

AME521201029W01

1. Remove the battery, and battery cover.
2. Remove the air cleaner component.
3. Separate the air pipe above the transaxle. (See F5–66 INTAKE-AIR SYSTEM REMOVAL/INSTALLATION.)
4. Remove the wheels and tires and splash shields.
5. Remove the starter. (See G–18 STARTER REMOVAL/INSTALLATION.)
6. Drain the transaxle oil into a container.
7. Remove in the order indicated in the table.
8. Install in the reverse order of removal.
9. Add the specified amount of the specified transaxle oil. (See J2–7 TRANSAXLE OIL REPLACEMENT.)
10. Warm up the engine and transaxle, inspect for the oil leakage, and inspect transaxle operation.

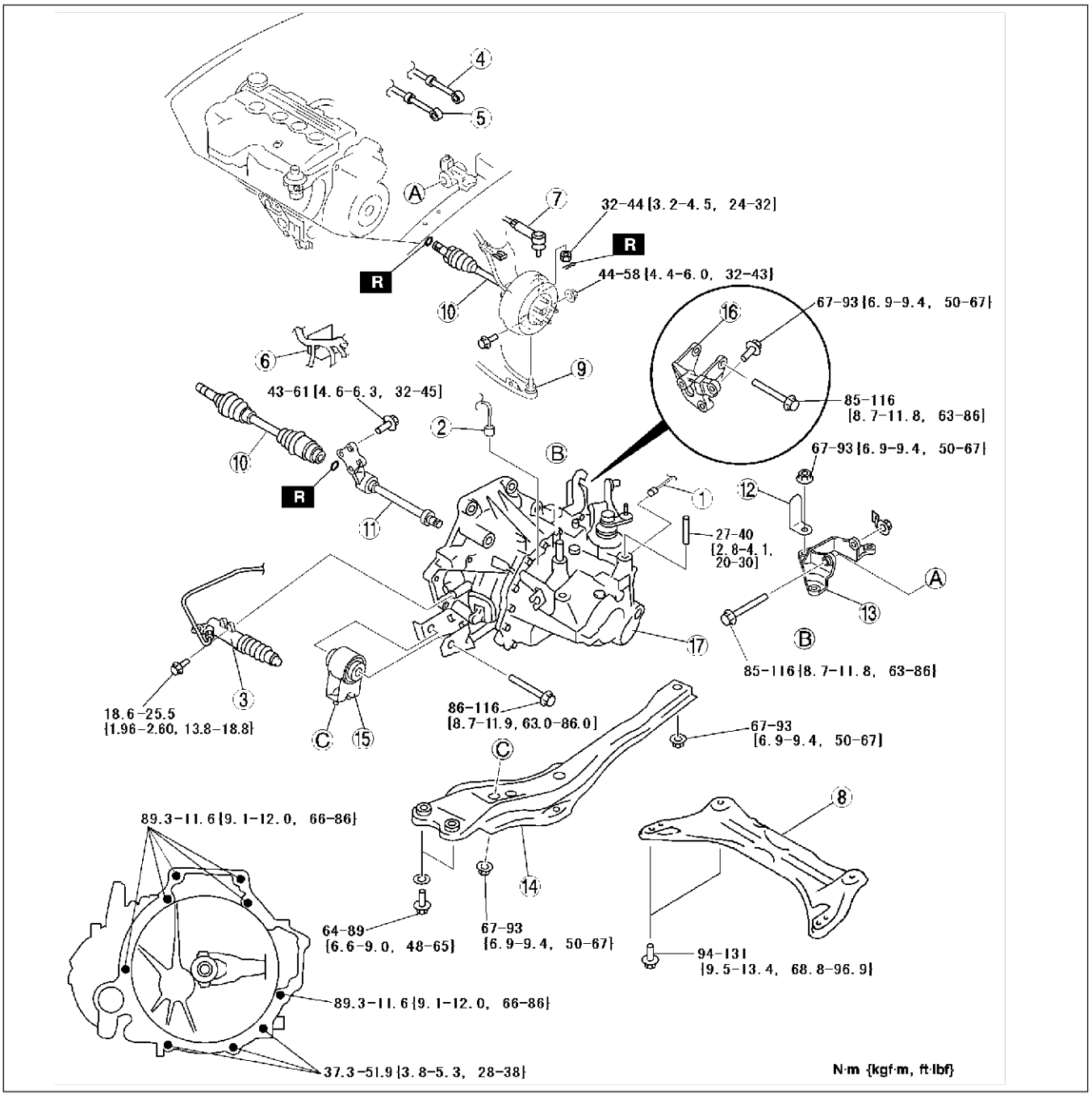

AME5212W001

1	Neutral switch connector
2	Reverse switch connector
3	Clutch release cylinder (See H–8 CLUTCH RELEASE CYLINDER REMOVAL/INSTALLATION)
4	Shift cable
5	Select cable
6	Harness, harness bracket
7	Tie-rod end ball joint
8	Transverse member
9	Lower arm ball joint (See J2–12 Lower Arm Ball Joint Removal Note)
10	Drive shaft (see M–24 DRIVE SHAFT (MZR-CD (RF TURBO)) REMOVAL/INSTALLATION)

11	Joint shaft (See M–9 JOINT SHAFT (MZR-CD (RF TURBO)) REMOVAL/INSTALLATION)
12	No.4 engine mount bracket stay
13	No.4 engine mount bracket (See J2–12 No.4 Engine Mount Bracket Removal Note)
14	Engine mounting member
15	No.2 engine mount (See J2–13)
16	No.1 engine mount (See J2–13)
17	Manual transaxle (See J2–12 Manual Transaxle Removal Note) (See J2–13 Manual Transaxle Installation Note)

Lower Arm Ball Joint Removal Note

Caution
- **Wrap a rag around the ball joint dust seal to protect it from getting damaged.**

1. Pry the lower arm out of the knuckle.

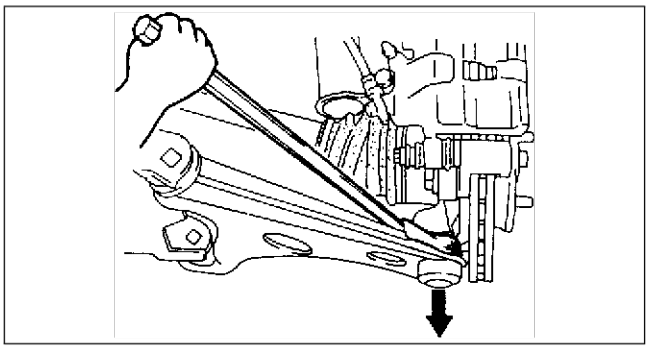

XME5112W006

No.4 Engine Mount Bracket Removal Note
1. Support the engine using the **SST** before removing the No.4 engine mount bracket.
2. Remove the No.4 engine mount bracket.

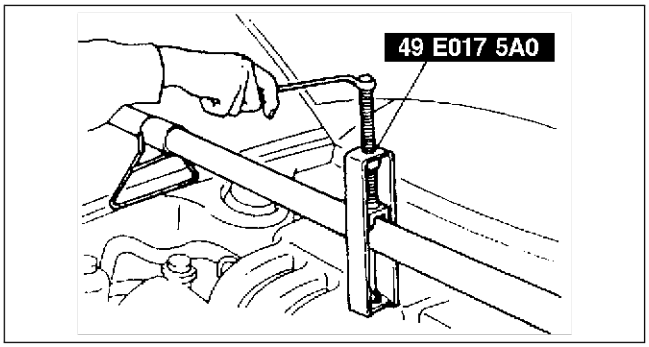

AME5212W008

Manual Transaxle Removal Note
1. Remove the stud of the No.4 engine mount.
2. Loosen the **SST** (49 E017 5A0) and lean the engine toward the transaxle.

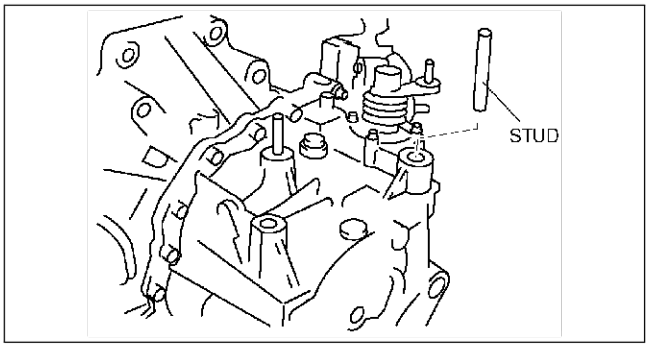

AME5212W002

3. Support the transaxle on a jack.
4. Remove the transaxle mounting bolts.
5. Remove the transaxle.

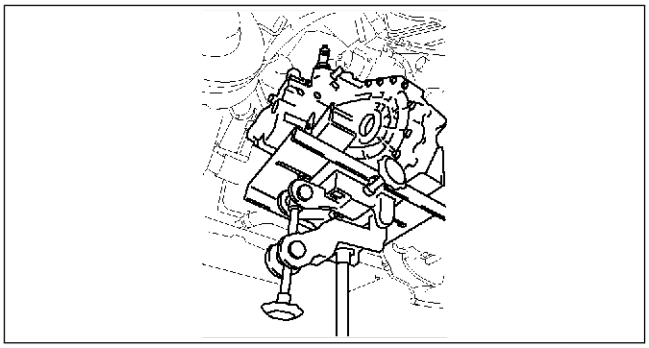

AME5212W009

Manual Transaxle Installation Note

1. Set the transaxle on a jack and lift into place.
2. Install the transaxle mounting bolts.

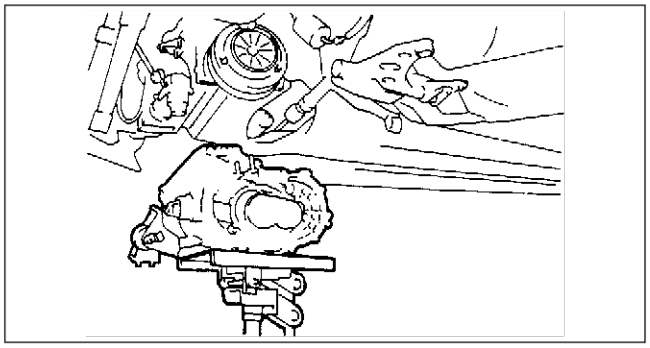

AME5212W010

3. Install the stud of the No.4 engine mount.

Tightening torque
27—40 N·m {2.8—4.1 kgf·m, 20—30 ft·lbf}

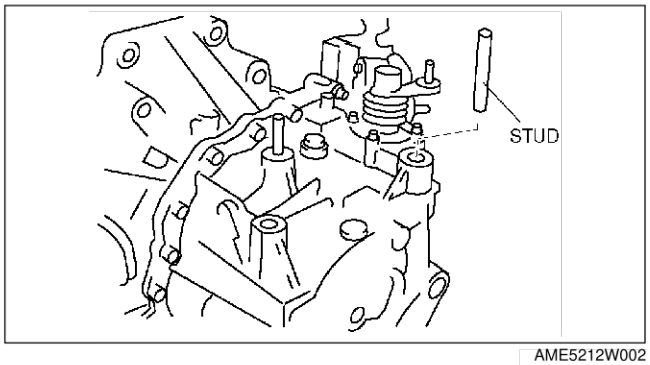

AME5212W002

No.1 Engine Mount Bracket Installation Note

Caution
- **Misaligning the bolts will cause damage to the bolt holes.**

1. Use the **SST** (engine support) to make sure the transaxle bolt holes and engine mount No.1 meet evenly.
2. After the 3 bolts are set in the holes, tighten the bolts to the specified torque.

Tightening torque
67—93 N·m {6.9—9.4 kgf·m, 50—67 ft·lbf}

No.2 Engine Mount Installation Note

1. Verify that the engine mount rubbers are installed as shown.
2. Install the engine mount to the transaxle.
3. Put the No.2 engine mount stud bolts in the installation holes when installing the engine mounting member.

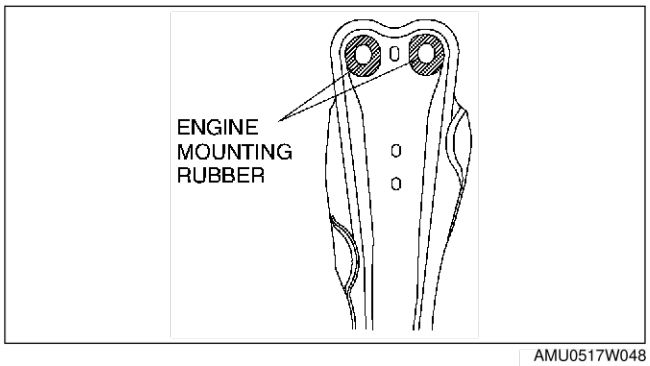

AMU0517W048

J2

4. Tighten bolt A and nut B.

   Tightening torque
   A: 64—89 N·m {6.6—9.0 kgf·m, 48—65 ft·lbf}
   B: 67—93 N·m {6.9—9.4 kgf·m, 50—67 ft·lbf}

5. Tighten nut C.

   Tightening torque
   67—93 N·m {6.9—9.4 kgf·m, 50—67 ft·lbf}

6. Line up the holes of the No.4 engine mount bracket and No.4 engine mount, and install the stud bolts into the holes.
7. Tighten the stud bolts in the order indicated in the figure.

   Tightening torque
   67—93 N·m {6.9—9.4 kgf·m, 50—67 ft·lbf}

8. Tighten the stud bolts installed in step 6.

   Tightening torque
   85—116 N·m
   {8.7—11.8 kgf·m, 63—86 ft·lbf}

9. Remove the **SST** (49 E017 5A0).
10. Loosen the No.2 engine mount stud bolts, and then retighten them.

    Tightening torque
    86—116 N·m {8.7—11.8 kgf·m, 63—86 ft·lbf}

End Of Sie

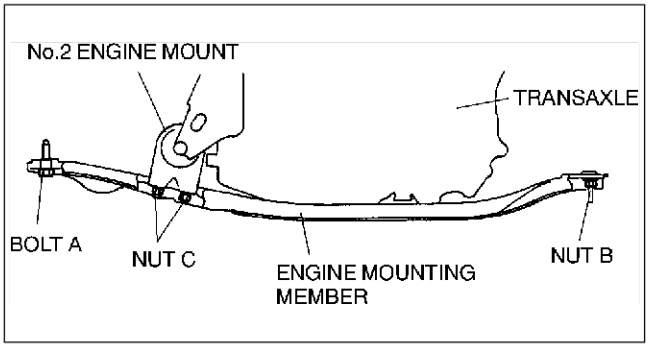

XME5112W012

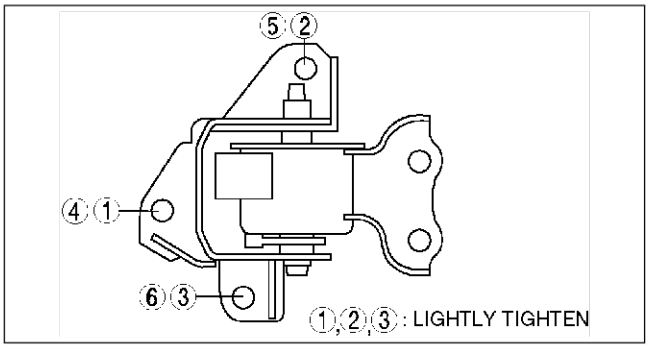

AME5212W004

SHIFT MECHANISM

SHIFT MECHANISM REMOVAL/INSTALLATION

AME521446010W01

1. Remove in the order indicated in the table.
2. Install in the reverse order of removal.
3. After installation, verify that the gear shift lever operates smoothly when the clutch pedal is depressed.

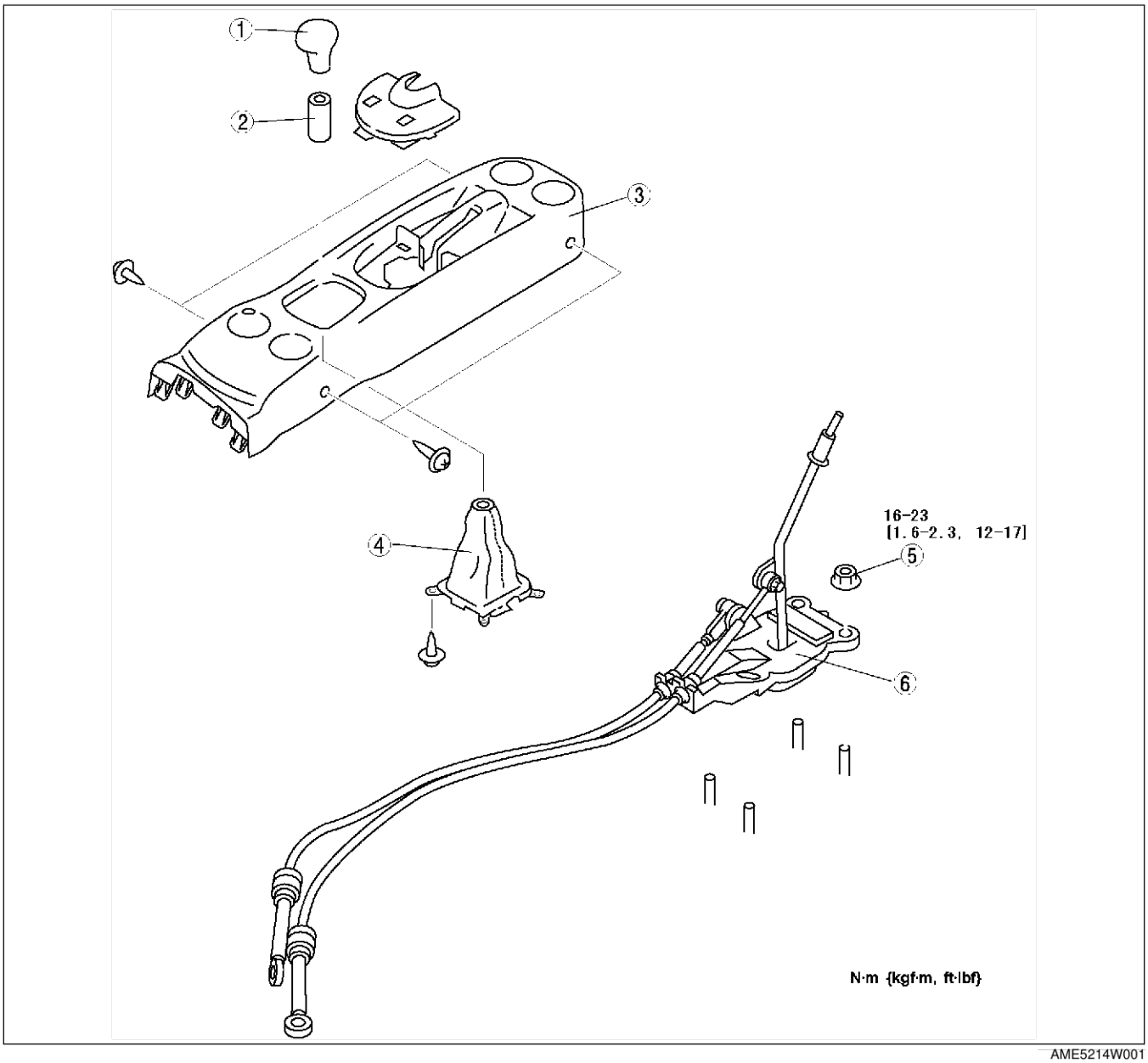

AME5214W001

1	Shift lever knob
2	Cover
3	Console (See S–26 REAR CONSOLE REMOVAL/INSTALLATION)

4	Boot
5	Nut
6	Shift lever component

End Of Sie

AUTOMATIC TRANSAXLE [JA5A-EL]

FEATURES

OUTLINE K2-3
FEATURES K2-3
SPECIFICATIONS K2-3
AUTOMATIC TRANSAXLE K2-4
OUTLINE K2-4
CROSS-SECTIONAL VIEW K2-7
ELECTRONIC CONTROL SYSTEM STRUCTURAL VIEW K2-8
AUTOMATIC TRANSAXLE CONTROL SYSTEM WIRING DIAGRAM K2-10
AUTOMATIC TRANSAXLE BLOCK DIAGRAM K2-11
AUTOMATIC TRANSAXLE DEVICE RELATIONSHIP CHART K2-14
POWERTRAIN DESCRIPTION K2-16
TORQUE CONVERTER DESCRIPTION K2-38
OIL PUMP DESCRIPTION K2-39
CENTRIFUGAL BALANCE CLUTCH DESCRIPTION K2-40
CONTROL VALVE BODY DESCRIPTION K2-41
TRANSAXLE FLUID TEMPERATURE (TFT) SENSOR DESCRIPTION K2-43
INPUT/TURBINE SPEED SENSOR DESCRIPTION K2-43
INTERMEDIATE SENSOR DESCRIPTION K2-44
VEHICLE SPEEDOMETER SENSOR DESCRIPTION K2-44
SOLENOID VALVE DESCRIPTION K2-45
CAR AREA NETWORK (CAN) DESCRIPTION K2-47
TRANSAXLE CONTROL MODULE (TCM) DESCRIPTION K2-48
SHIFT CONTROL DESCRIPTION K2-48
DRIVE MODE DETERMINATION DESCRIPTION K2-49
LINE PRESSURE CONTROL DESCRIPTION K2-50
FEEDBACK CONTROL DESCRIPTION K2-52
N-D SELECT CONTROL DESCRIPTION K2-54
TORQUE CONVERTER CLUTCH (TCC) CONTROL DESCRIPTION K2-55
SLOPE MODE CONTROL DESCRIPTION K2-58
ON-BOARD DIAGNOSTIC (OBD) SYSTEM DESCRIPTION K2-59
COOLING SYSTEM DESCRIPTION K2-66

SERVICE

AUTOMATIC TRANSAXLE K2-67
MECHANICAL SYSTEM TEST K2-67
ROAD TEST K2-70
AUTOMATIC TRANSAXLE FLUID (ATF) INSPECTION K2-74
AUTOMATIC TRANSAXLE FLUID (ATF) REPLACEMENT K2-75
HOLD SWITCH INSPECTION K2-75
HOLD SWITCH REMOVAL/INSTALLATION K2-76
TRANSAXLE RANGE (TR) SWITCH INSPECTION K2-76
TRANSAXLE RANGE (TR) SWITCH REMOVAL/INSTALLATION K2-77
TRANSAXLE RANGE (TR) SWITCH ADJUSTMENT K2-79
TRANSAXLE FLUID TEMPERATURE (TFT) SENSOR REMOVAL/INSTALLATION K2-80
TRANSAXLE FLUID TEMPERATURE (TFT) SENSOR INSPECTION K2-80
INPUT/TURBINE SPEED SENSOR INSPECTION K2-81
INPUT/TURBINE SPEED SENSOR REMOVAL/INSTALLATION K2-82
INTERMEDIATE SENSOR INSPECTION K2-82
INTERMEDIATE SENSOR REMOVAL/INSTALLATION K2-83
VEHICLE SPEEDOMETER SENSOR (VSS) INSPECTION K2-83
VEHICLE SPEEDOMETER SENSOR (VSS) REMOVAL/INSTALLATION K2-84
SOLENOID VALVE INSPECTION K2-84
SOLENOID VALVE REMOVAL/INSTALLATION K2-86
HOLD INDICATOR LIGHT INSPECTION K2-87
TCM INSPECTION K2-88
TCM REMOVAL/INSTALLATION K2-94
AUTOMATIC TRANSAXLE REMOVAL/INSTALLATION K2-95
OIL SEAL REMOVAL/INSTALLATION K2-100
CONTROL VALVE BODY REMOVAL/INSTALLATION K2-100
OIL COOLER FLUSHING K2-101
OIL COOLER REMOVAL/INSTALLATION K2-102
OIL COOLER DISASSEMBLY/ASSEMBLY K2-105
DRIVE PLATE REMOVAL/INSTALLATION K2-108
AUTOMATIC TRANSAXLE SHIFT MECHANISM K2-109
SHIFT-LOCK INSPECTION K2-109
SHIFT-LOCK RELEASE LEVER INSPECTION K2-109
KEY INTERLOCK INSPECTION K2-109
KEY INTERLOCK SOLENOID INSPECTION K2-110
KEY INTERLOCK RESISTOR INSPECTION K2-110
KEY INTERLOCK RESISTOR REMOVAL/INSTALLATION K2-110
P POSITION SWITCH (BUILT-IN SELECTOR LEVER) INSPECTION K2-111
SHIFT-LOCK SOLENOID (BUILT-IN SELECTOR LEVER) INSPECTION K2-111
SHIFT-LOCK RELAY INSPECTION K2-111
SHIFT-LOCK RELAY REMOVAL/INSTALLATION K2-112
SELECTOR LEVER INSPECTION K2-112
SELECTOR CABLE ADJUSTMENT K2-112

SELECTOR LEVER REMOVAL/ INSTALLATION....K2-113
ON-BOARD DIAGNOSTIC....K2-115
FOREWORD....K2-115
AUTOMATIC TRANSAXLE ON-BOARD DIAGNOSTIC FUNCTION....K2-115
AFTER REPAIR PROCEDURE....K2-116
DTC TABLE....K2-118
DTC P0705....K2-119
DTC P0706....K2-122
DTC P0711 (ISRAELI SPECS.)....K2-125
DTC P0712....K2-126
DTC P0713....K2-128
DTC P0715....K2-130
DTC P0720....K2-132
DTC P0740 (ISRAELI SPECS.)....K2-135
DTC P0743....K2-137
DTC P0748....K2-139
DTC P0751 (ISRAELI SPECS.)....K2-142
DTC P0752 (ISRAELI SPECS.)....K2-143
DTC P0753....K2-144
DTC P0756 (ISRAELI SPECS.)....K2-147
DTC P0757 (ISRAELI SPECS.)....K2-148
DTC P0758....K2-149
DTC P0761 (ISRAELI SPECS.)....K2-152
DTC P0762 (ISRAELI SPECS.)....K2-153
DTC P0763....K2-154
DTC P0768....K2-156
DTC P0773....K2-159
DTC P0778....K2-162
DTC P0791....K2-165
DTC P0798....K2-168
DTC P1710....K2-171
DTC U0073....K2-174
DTC U0100....K2-174
PID/DATA MONITOR INSPECTION....K2-176
TROUBLESHOOTING....K2-178
AUTOMATIC TRANSAXLE CONTROL SYSTEM WIRING DIAGRAM....K2-179
FOREWORD....K2-180
AUTOMATIC TRANSAXLE BASIC INSPECTION....K2-181
AUTOMATIC TRANSAXLE SYMPTOM TROUBLESHOOTING....K2-182
NO.1 VEHICLE DOES NOT MOVE IN D, S, L RANGES, OR IN R POSITION....K2-187
NO.2 VEHICLE MOVES IN N POSITION....K2-188
NO.3 VEHICLE MOVES IN P POSITION, OR PARKING GEAR DOES NOT DISENGAGE WHEN P IS DISENGAGED....K2-188
NO.4 EXCESSIVE CREEP....K2-188
NO.5 NO CREEP AT ALL....K2-189
NO.6 LOW MAXIMUM SPEED AND POOR ACCELERATION....K2-190
NO.7 NO SHIFTING....K2-191
NO.8 DOES NOT SHIFT TO FIFTH GEAR (5GR)....K2-191
NO.9 ABNORMAL SHIFTING....K2-192
NO.10 FREQUENT SHIFTING....K2-193
NO.11 SHIFT POINT IS HIGH OR LOW....K2-193
NO.12 TORQUE CONVERTER CLUTCH (TCC) NON-OPERATION....K2-194
NO.13 NO KICKDOWN....K2-194
NO.14 ENGINE FLARES UP OR SLIPS WHEN UPSHIFTING OR DOWNSHIFTING....K2-195
NO.15 ENGINE FLARES UP OR SLIPS WHEN ACCELERATING VEHICLE....K2-195
NO.16 JUDDER UPON TORQUE CONVERTER CLUTCH (TCC) OPERATION....K2-196
NO.17 EXCESSIVE SHIFT SHOCK FROM N TO D OR N TO R POSITION/RANGE....K2-196
NO.18 EXCESSIVE SHIFT SHOCK IS GIVEN WHEN UPSHIFTING AND DOWNSHIFTING....K2-197
NO.19 EXCESSIVE SHIFT SHOCK ON TORQUE CONVERTER CLUTCH (TCC)....K2-197
NO.20 NOISE OCCURS AT IDLE WHEN VEHICLE IS STOPPED IN ALL POSITIONS/ RANGES....K2-197
NO.21 NOISE OCCURS AT IDLE WHEN VEHICLE IS STOPPED IN D, S, L RANGES, OR IN R POSITION....K2-198
NO.22 NO ENGINE BRAKING IN L RANGE....K2-198
NO.23 TRANSAXLE OVERHEATS....K2-199
NO.24 ENGINE STALLS WHEN SHIFTED TO D, S, L RANGES, OR IN R POSITION....K2-199
NO.25 ENGINE STALLS WHEN DRIVING AT SLOW SPEED OR STOPPING....K2-200
NO.26 HOLD LAMP DOES NOT ILLUMINATES WHEN HOLD SWITCH IS TURNED ON....K2-200
NO.27 HOLD LAMP ILLUMINATES WHEN HOLD SWITCH IS NOT TURNED ON....K2-201

OUTLINE

FEATURES

AME570201030W01

ATX

Improved marketability

- New JA5A-EL automatic transaxle is used with on AJ engine.

Improved shift quality

- Five speed automatic transaxle has been adopted.
- The feedback control system has been adopted.
- The centrifugal balance clutch chambers have been adopted.
- A plate-type clutch pack replaces the band brake in the 2-4 brake.

High efficiency, compactness, and light weight

- Miniature trochoid gear type oil pump with torque converter direct drive has been adopted.

End Of Sta

SPECIFICATIONS

AME570201030W02

Item		New MPV		Previous MPV
		For General (R.H.D.) specs.	Except for General (R.H.D.) specs.	–
Transaxle type		JA5A-EL		GF4A-EL
Engine type		AJ		GY
Gear ratio	1GR	3.801		2.800
	2GR	2.131		1.540
	3GR	1.364		1.000
	4GR	0.935		0.700
	5GR (O/D)	0.685		–
	Reverse	2.970		2.333
Final gear ratio		3.290	3.491	4.375
ATF	Type	ATF M-III or equivalent (e.g. Dexron®III)		
	Capacity (approximate quantity) (L {US qt, Imp qt})	9.7{10.3, 8.5}		8.0 {8.4, 7.0}
Torque converter stall torque ratio		1.86:1		2.00:1
Hydraulic system (Number of drive/driven plates)	Forward clutch	–		3/3
	Coasting clutch	–		2/3
	3-4 clutch	–		4/4
	Low clutch	7/7		–
	2-4 brake	3/4		–
	High clutch	5/5		–
	Direct clutch	4/4		–
	Reverse clutch	2/2		
	Low and reverse brake	6/5		4/4
Band servo (mm {in})	Servo diameter (Piston outer dia./ retainer inner dia.)	–		78.0/40.0 {3.07/1.57}
	Reduction accumulator piston outer dia./reduction band servo piston outer dia.	49.66/57.64		–
Number of planetary gear teeth	Large sun gear	–		36
	Small sun gear	–		30
	Long pinion gear	–		24
	Short pinion gear	–		22
	Internal gear	–		84
Number of front planetary gear teeth	Ring gear	74		–
	Sun gear	34		–
	Pinion gear	20		–
Number of rear planetary gear teeth	Ring gear	75		–
	Sun gear	42		–
	Pinion gear	17		–

Item		New MPV		Previous MPV
		For General (R.H.D.) specs.	Except for General (R.H.D.) specs.	–
Number of reduction planetary gear teeth	Ring gear	85		–
	Sun gear	31		–
	Pinion gear	27		–
Number of output gear teeth		41		16
Number of idler gear teeth		47		37
Number of reduction gear teeth		23	22	–
Number of ring gear teeth		66	67	70

Bold frames:New specifications

End Of Sie

AUTOMATIC TRANSAXLE

OUTLINE

AME571401030W01

- Adopted new JA5A-EL automatic transaxle.
- Newly designed FF type five-speed automatic transaxle.
  - — Use of 3 sets of planetary gears, and a wider gear ratio setting realizes improvement of acceleration-from-standing-start performance, fuel economy, and quietness. Also, by placement of two sets of planetary gears in parallel with one set, the automatic transaxle is more compact.
- Adopted 2-4 brake clutch.
  - — Adopted a wet-type, multi-plate 2-4 brake clutch instead of the 2-4 brake band used in the past, for smoother gear switching performance.
- Adopted centrifugal balance clutch
  - — The newly adopted centrifugal balance clutch pushes the clutch piston forcefully to low and high clutch by centrifugal hydraulic pressure for smoother gear switching with batter response.
- Adopted controller area network (CAN)
  - — By adopting CAN, The TCM is always in contact with other computers in the car and controls the automatic transaxle properly. This has also made troubleshooting diagnosis easier for the entire vehicle.
- Solenoid, sensor
  - — Adoption of four duty-type solenoids, five ON-OFF type solenoids, and three revolving sensors realizes finer, more expedient control of gear shifting performance.
- Adoption of revers inhibit control
  - — If the reverse position is selected by mistake while driving in forward motion, the reverse inhibit control system will cancel the operation electronically and set the position to neutral as a safety enhancement.

Comparison of New MPV and Previous MPV

Item		New MPV	Previous MPV
Mechanical component	Forward clutch	N/A	Equipped
	Reverse clutch	Equipped	
	3-4 clutch	N/A	Equipped
	Coasting clutch	N/A	Equipped
	2-4 brake band	N/A	Equipped
	Reduction brake band	Equipped	N/A
	2-4 brake	Equipped	N/A
	Low and reverse brake	Equipped	
	Low clutch	Equipped	N/A
	High clutch	Equipped	N/A
	Direct clutch	Equipped	N/A
	Number of one-way clutches	Two	
	Planetary gear	Simple planetary	Ravigneaux type
	Output gear	Equipped	
	Idler gear	Equipped	
	Reduction gear	Equipped	N/A
	Differential	Equipped (two-pinion type)	Equipped (four-pinion type)

Item		New MPV	Previous MPV
Electronic parts	ON/OFF solenoid valve	Five	
	Duty cycle type solenoid valve	Four	One
	Revolution sensor	Three	Two
Electronic control	Line pressure control	• Pressure control solenoid (duty type) adjusts line pressure according to engine load condition and vehicle driving condition	
	Shift control	• Detects throttle valve opening angle and parking gear speed. Switches to the most suitable gear position according to the preset shift diagram	• Detects throttle valve opening angle and reverse and forward drum revolution speed. Switches to the most suitable gear position according to the preset shift diagram
	Slope mode control	• Changes the shift point to prevent frequent up/down shifting when climbing.	
	TCC control	• TCC control solenoid valve switches the paths for the line pressure applied to the TCC shift valve	
	OBD system	• Detects and/or memorizes failure of input/output part and transaxle condition	

Outline of Operation

- The operation of the electronic automatic transaxle is classified into three systems: the electronic control system, the hydraulic pressure control system, and the powertrain system (includes the torque converter system.)

  Electronic control system
  - According to the signals from the switches and sensors in the input system, the TCM outputs the signal which matches the present driving condition to the ON/OFF type solenoids and the duty-cycle type solenoids in the hydraulic pressure control system.

  Hydraulic pressure control system
  - According to the signals from the TCM, each solenoid operates to switch the hydraulic passages in the control valve body and controls the clutch engagement pressure.
  - The line pressure is adjusted by the duty-cycle type pressure control solenoid. The hydraulic passages are switched by the ON/OFF type solenoids and the clutch engagement pressure is controlled by the duty-cycle type solenoids.

  Powertrain system
  - The driving force from the engine is transmitted through the torque converter to the transaxle.
  - The transmitted driving force operates each clutch and brake according to the clutch engagement pressure from the duty-cycle type solenoid, and the planetary gears change the gear ratio to the optimal driving force. The changed driving force is transmitted through the differential to the axle shaft and then the tires.

EC-AT Operation Chart

Position/Renge	Mode	Gear position	Engine braking effect	Low clutch	2-4 brake	High clutch	Reveres clutch	Low and reverse brake	Reduction brake	Direct clutch	Low one-way clutch	Reduction one-way clutch	Solenoid valve				
													Shift solenoid A	Shift solenoid B	Shift solenoid C	Reduction timing solenoid	Neutral shift solenoid
P	—	—	—						○				○	○	○		
R	—	—	Yes				○	○	○				○	○	○		
	R INH	—	No				○		○				○	○	○		○
N	—	—	—						○				○	○	○		
D	HOLD switch OFF	1GR	No	○							●	●	○	○	○	○	
		2GR	No	○	○							●	○	○		○	
		3GR	No	○		○						●		○		○	
		4GR	No		○	○						●			○	○	
		5GR	Yes		○	○				○			○		○	○	
	HOLD switch ON	2GR	No	○	○							●	○	○		○	
		3GR	No	○		○						●		○		○	
		4GR	Yes		○	○			○						○		
		5GR	Yes		○	○				○			○		○	○	
S	HOLD switch OFF	1GR	No	○							●	●	○	○	○	○	
		2GR	No	○	○							●	○	○		○	
		3GR	No	○		○						●		○		○	
		4GR	Yes		○	○			○						○		
		5GR	Yes		○	○				○			○		○	○	
	HOLD switch ON	2GR	No	○	○							●	○	○		○	
		3GR	Yes	○		○			○					○			
		4GR	Yes		○	○			○						○		
		5GR	Yes		○	○				○			○		○	○	
L	HOLD switch OFF	1GR	No	○							●	●	○	○	○	○	
		2GR	No	○	○							●	○	○		○	
		3GR	Yes	○		○			○					○			
		4GR	Yes		○	○			○						○		
		5GR	Yes		○	○				○			○		○	○	
	HOLD switch ON	2GR	Yes	○	○				○				○	○			
		3GR	Yes	○		○			○					○			
		4GR	Yes		○	○			○						○		
		5GR	Yes		○	○				○			○		○	○	

○: Operating
●: Transmits the torque only when driving

AME5714W019

End Of Sie

CROSS-SECTIONAL VIEW

AME571401030W02

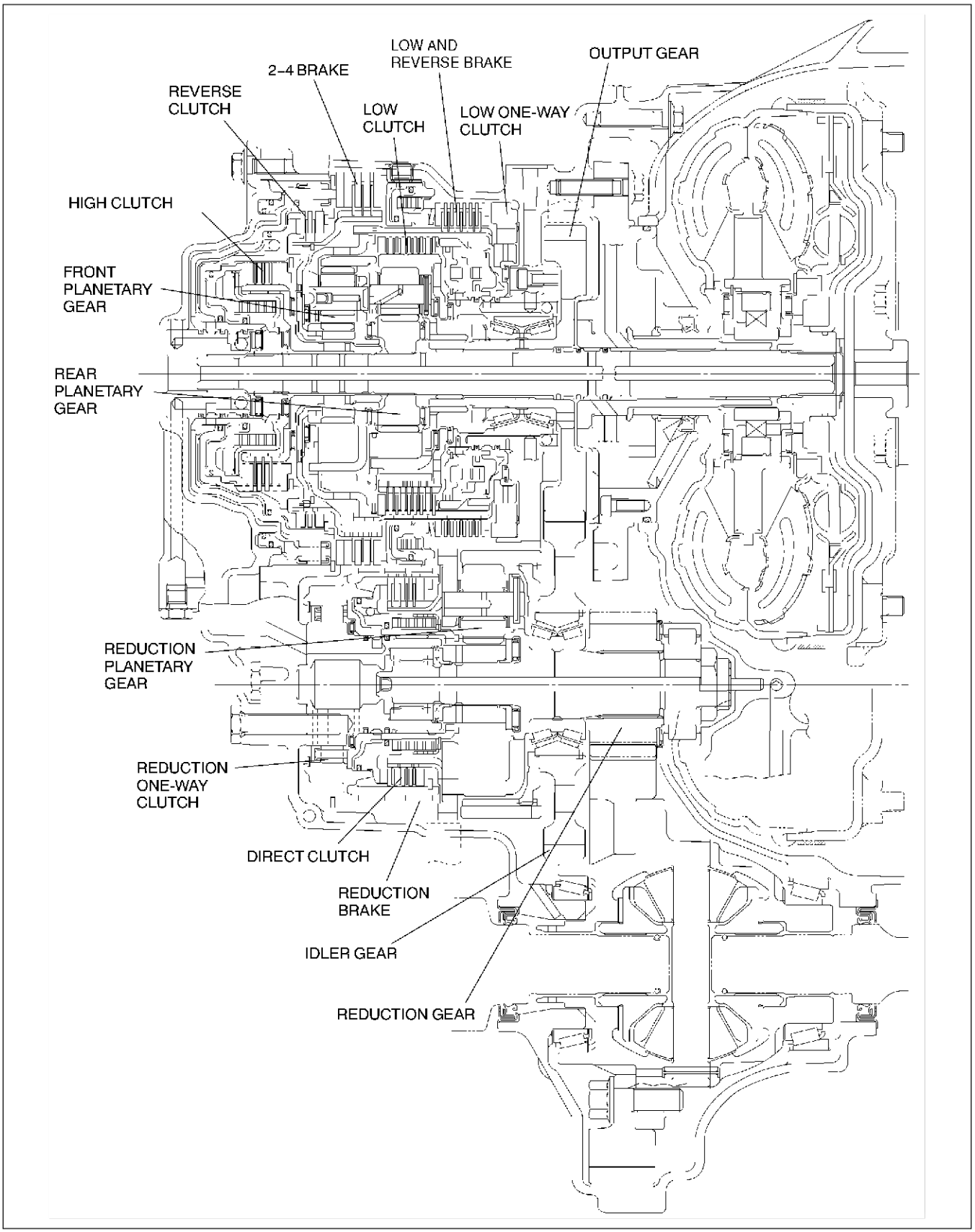

AMU0517S002

End Of Sto

ELECTRONIC CONTROL SYSTEM STRUCTURAL VIEW

AME571401030W03

- The TCM control the automatic transaxle operations. The TCM outputs a control signal to the transaxle according to the signal from other sensors and/or switches.

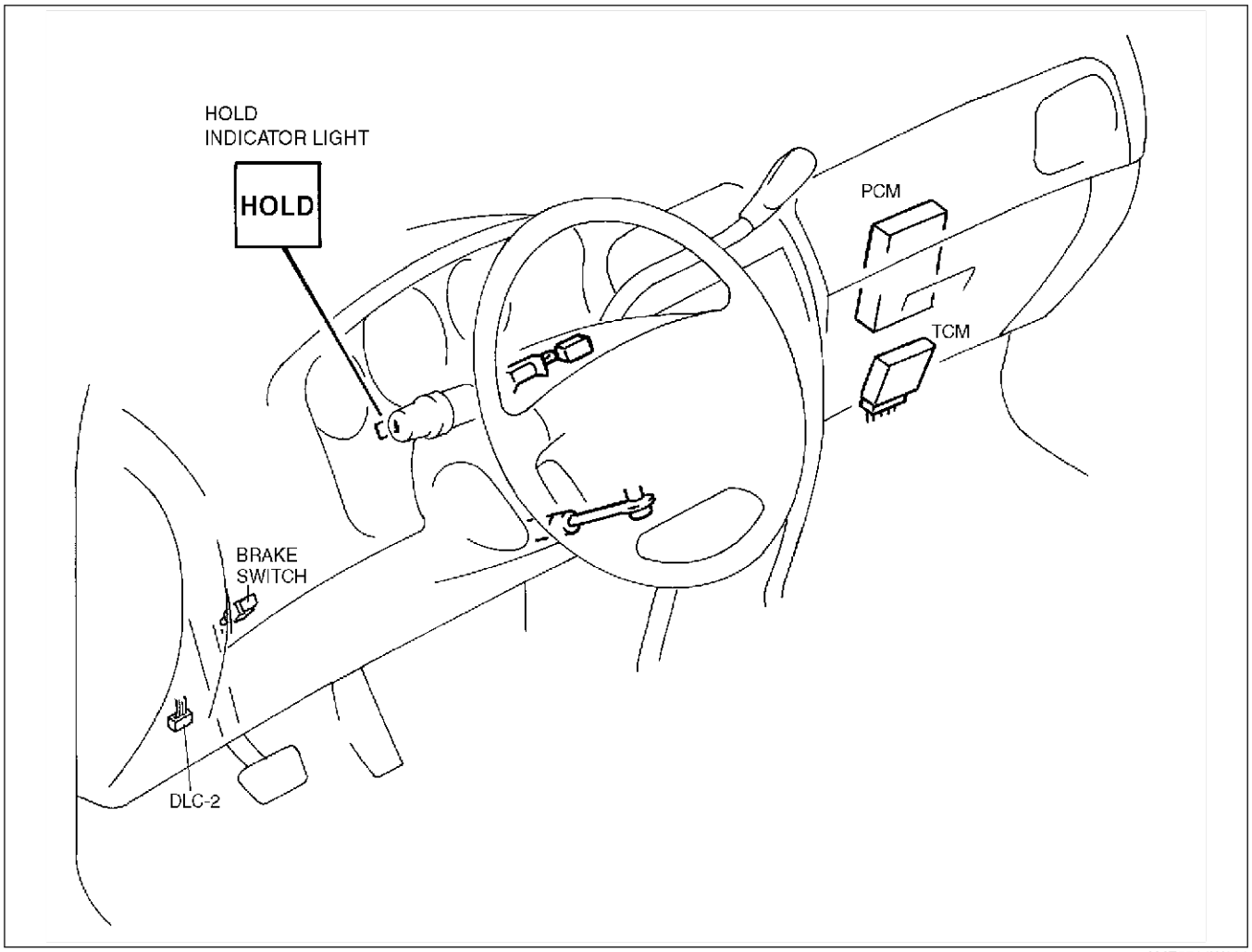

AME5714W001

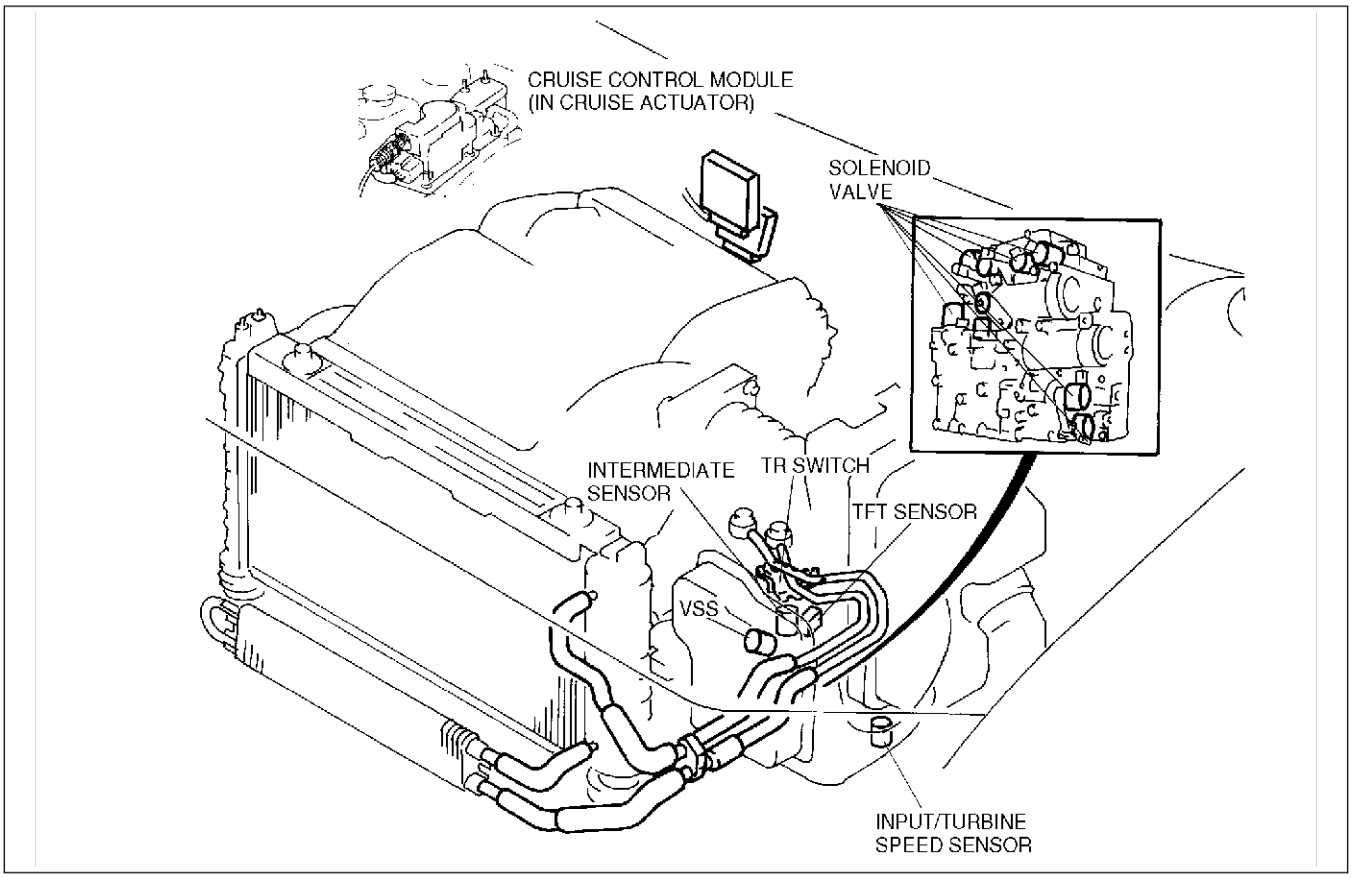

AMU0517S066

End Of Se

AUTOMATIC TRANSAXLE CONTROL SYSTEM WIRING DIAGRAM

AME571401030W04

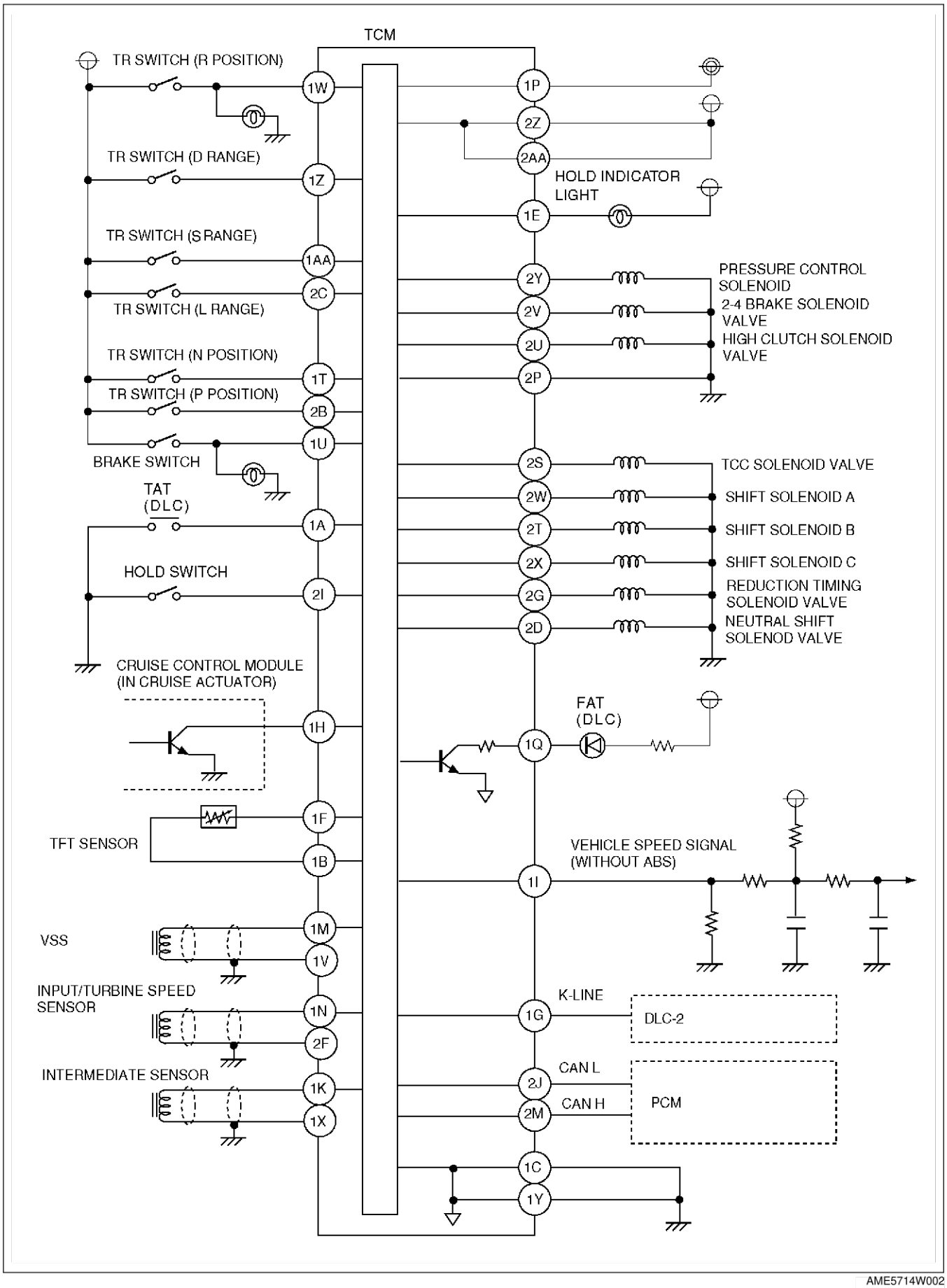

AME5714W002

AUTOMATIC TRANSAXLE BLOCK DIAGRAM

AME571401030W05

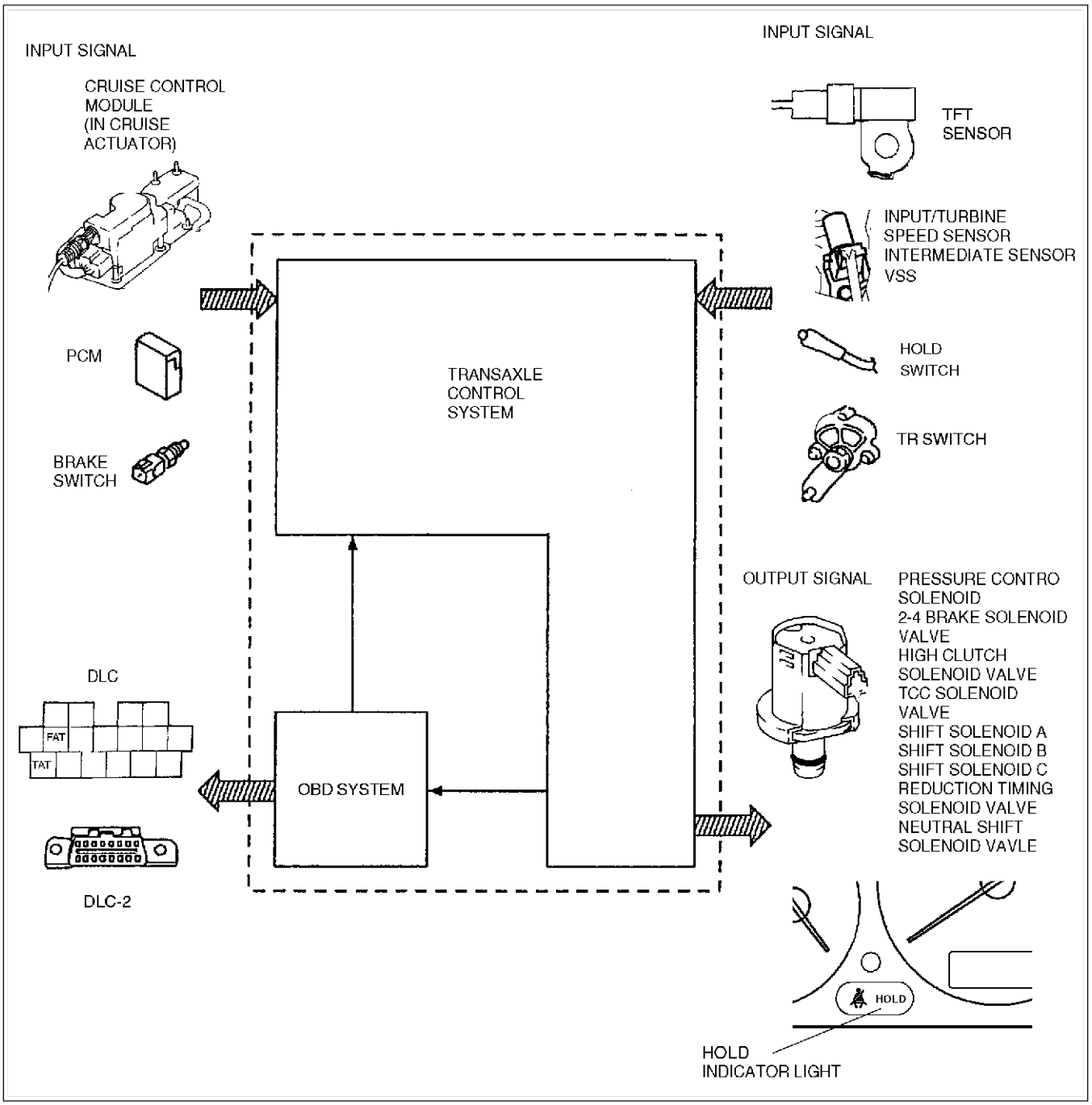

AME5714W003

K2

Electronic Control Item and Control

Control item	Contents
Shift control	• Detects engine load condition and vehicle speed. Shifts to the best gear position according to the programmed automatic shift diagram.
Line pressure control	• Generates line pressure matching the engine load condition and driving conditions. Optimizes line pressure for each shift. When the ATF temperature is low, automatically optimizes line pressure for quick clutch engagement.
Revers inhibition control	• When the shift lever is shifted to R position while the vehicle is running forward at approx. 30 km/h{19 mph} or more, the TCM turns the neutral shift solenoid valve on and drains the low and reverse brake hydraulic pressure. Due to this, the transaxle shifts to neutral.
Shift transient control	• Adjusts transient hydraulic pressure according to engine load and vehicle driving conditions when shifting using the pressure control solenoid, 2-4 brake solenoid valve, the high clutch solenoid valve, and each accumulator control valve. • Temporarily lowers engine torque during shift (up and down) to improve shift feel • The lock timing for the reduction brake band is controlled by the control of the reduction timing solenoid valve ON/OFF timing. • The lock timing for the clutch brake is controlled by the control of shift solenoid A, B, and C ON/OFF timing.
Feedback control	• Corrects clutch engagement pressure and timing on drain side to compensate for changes in engine performance and changes in transaxle
TCC control	• Controls TCC according to the programmed TCC points
N-D select control	• When a driving range is selected from P/N, the fuel injection amount is controlled to prevent fluctuation in engine speed.
Slope mode control	• Changes the shift point to prevent frequent shifting up/down when climbing hills
OBD system	• Detects and/or memorizes failure of input/output part and transaxle condition

Component Description (Electronic Control)

Part name			Function
Input system	HOLD switch		• Selects driving modes (HOLD)
	TR switch		• Detects selector lever ranges/positions
	Input/turbine speed sensor		• Detects reverse clutch drum revolution speed
	Intermediate sensor		• Detects output gear revolution speed
	Vehicle speedometer sensor		• Detects parking gear revolution speed
	TFT sensor		• Detects the ATF temperature
	Brake switch		• Detects the brake pedal depressed
	Cruise control module (in cruise actuator)		• When the cruise control is in use, the signal detects when the difference between the target speed and actual speed exceeds specification
	CAN signal (PCM to TCM)	Throttle position signal	• Input throttle opening angle from PCM
		Engine torque signal (without torque down)	• Input engine torque from PCM
		Engine torque signal (with torque down)	• Input engine torque from PCM
		Engine torque signal (loss torque)	• Input engine loss torque from PCM
		Torque reduced signal	• Detects signals indicating torque down availability
		Engine coolant temperature signal	• Input engine coolant temperature from PCM
		Engine speed signal	• Input engine speed from PCM
		Battery OFF signal	• Detect negative battery cable disconnected

Part name			Function
Output system	ON/OFF type	Shift solenoid A	• Switches ON and OFF based on electric signals from the TCM, changes hydraulic circuit to control shifting
		Shift solenoid B	• Switches ON and OFF based on electric signals from the TCM, changes hydraulic circuit to control shifting
		Shift solenoid C	• Switches ON and OFF based on electric signals from the TCM, changes hydraulic circuit to control shifting
		Reduction timing solenoid valve	• Switches ON and OFF based on electric signals from the TCM, changes hydraulic circuit to control shifting
		Neutral shift solenoid valve	• Switches ON and OFF based on electric signals from the TCM, changes hydraulic circuit to control shifting
	Duty type	Pressure control solenoid	• Switches ON and OFF based on electric signal (duty signals) from the TCM adjusts line pressure to match driving conditions
		2-4 brake solenoid valve	• Switches ON and OFF based on electric signal (duty signals) from the TCM adjusts line pressure to match driving conditions
		High clutch solenoid valve	• Switch ON and OFF based on electric signal (duty signals) from the TCM adjusts line pressure to match driving conditions
		TCC solenoid valve	• Switch ON and OFF based on electric signal (duty signals) from the TCM to control TCC
	HOLD indicator light		• Illuminates to indicate that the transaxle is in HOLD mode • Flashes when failure is detected by diagnosis function
	CAN signal (TCM to PCM)	Reduce torque signal	• Sends signals to the PCM during shifting
		Range signal	• Output transaxle load condition to PCM
		Turbine speed signal	• Output turbine speed to PCM
		ATF temperature signal	• Output ATF high temperature signal to PCM
		TCC signal	• Output TCC signal to PCM
		Racing select signal	• Requests fuel cut when selector lever is shifted during racing
		MIL indicate request signal	• Requests MIL illumination when failure is detected by diagnosis function

End Of Sie

AUTOMATIC TRANSAXLE DEVICE RELATIONSHIP CHART

AME571401030W06

Component		Control item								
		Shift control	Line pressure control	Reverse inhibition control	Shift transient control	Feedback control	TCC control	N-D select control	Slope mode control	OBD system
Input										
HOLD switch		X	X		X					
TR switch		X	X	X	X	X	X	X		X
Input/turbine speed sensor			X		X	X	X	X	X	X
Intermediate sensor			X		X	X				X
Vehicle speedometer sensor		X	X	X	X	X	X	X	X	X
TFT sensor		X	X		X	X	X	X		X
Brake switch		X					X		X	
Cruise control module (4GR inhibit signal)		X			X					
CAN signal (PCM to TCM)	Throttle position signal	X	X		X	X	X	X	X	X
	Engine torque signal (without torque down)		X		X	X		X	X	X
	Engine torque signal (with torque down)		X		X	X		X		X
	Engine torque signal (loss torque)		X		X	X		X	X	X
	Engine coolant temperature signal	X								X
	Engine speed signal						X		X	X
	Torque reduce signal		X		X	X		X		X
	Battery OFF signal					X				X
Output										

Component		Control item								
		Shift control	Line pressure control	Reverse inhibition control	Shift transient control	Feedback control	TCC control	N-D select control	Slope mode control	OBD system
ON/OFF type	Shift solenoid A	X			X					X
	Shift solenoid B	X			X					X
	Shift solenoid C	X			X					X
	Reduction timing solenoid valve		X		X					X
	Neutral shift solenoid valve	X	X	X	X					X
Duty type	Pressure control solenoid	X	X		X	X				X
	2-4 brake solenoid valve	X	X		X	X				X
	High clutch solenoid valve	X	X		X	X				X
	TCC solenoid valve		X				X			X
HOLD indicator light		X								X
CAN signal (TCM to PCM)	Reduce torque signal					X		X		X
	Range signal									X
	Turbine speed signal									X
	ATF temperature signal									X
	TCC signal						X			X
	Racing select signal									X
	MIL indicate request signal									X

X : Available

End Of Ste

K2

POWERTRAIN DESCRIPTION

AME571401030W07

Outline

- In the powertrain system, the hydraulic pressure transported by the control valve operates the clutch, and brake, and the planetary gear changes the gear ratio according to the driving conditions.

Structure

- The powertrain system consists of seven pairs of clutches, brake, brake band, two pairs of one-way clutches, and simple type planetary gears.

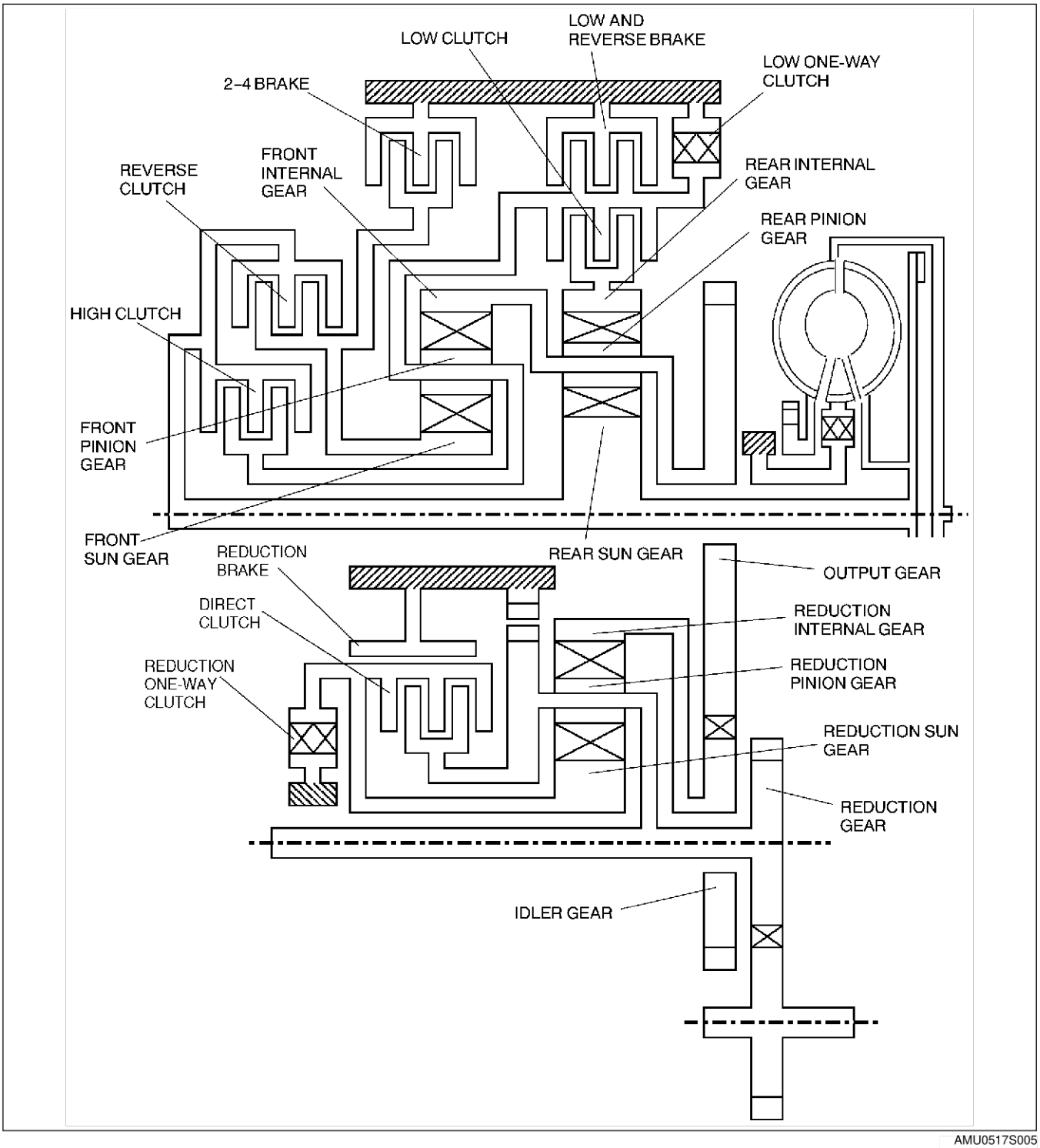

AMU0517S005

Operation

Note

- All rotation are viewed from the side cover.

Component description

Component	Function
Low clutch	• Transmits rotation of low clutch drum to rear internal gear • Operates in 1GR, 2GR, or 3GR position
2-4 brake	• Prevents rotation of front sun gear • Operates in 2GR, 4GR, or 5GR position
High clutch	• Transmits rotation of high clutch drum to front planetary carrier • Operates in 3GR, 4GR, or 5GR position
Reverse clutch	• Transmits rotation of reverse clutch drum to front sun gear • Operates when vehicle is reversing
Reduction brake	• Prevents rotation of direct clutch drum and prevents rotation of reduction sun gear
Low and reverse brake	• Prevents rotation of low and reverse brake hub
Direct clutch	• Transmits rotation of reduction planetary carrier to reduction sun gear • Operates in 5GR position
Low one-way clutch	• Locks clockwise rotation of front planetary carrier
Reduction one-way clutch	• Locks counterclockwise rotation of reduction sun gear

Gear Position and Operation of Featured Parts

Renge	Gear position	Gear ratio	HOLD switch OFF			HOLD switch ON		
			Shift	TCC operation	Engine brake	Shift	TCC operation	Engine brake
P		—	—			—		
R		2.970			×			×
N		—	—			—		
D	1GR	3.801	↑↓			↑↓		
	2GR	2.131	↑↓			↑↓		
	3GR	1.364	↑↓			↑↓		
	4GR	0.935	↑↓	×		↑↓	×	×
	5GR	0.685	↓	×	×	↑		×
S	1GR	3.801	↑↓					
	2GR	2.131	↑↓			↑↓		
	3GR	1.364	↑↓			↑↓	×	×
	4GR	0.935	↑↓	×	×	↑	×	×
	5GR	0.685			×		×	×
L	1GR	3.801	↑↓					
	2GR	2.131	↑↓			↑↓		×
	3GR	1.364	↑↓		×	↑		×
	4GR	0.935	↑		×	↑		×
	5GR	0.685			×			×

× : TCC or engine braking is available.

AME5714W020

1GR (D range)

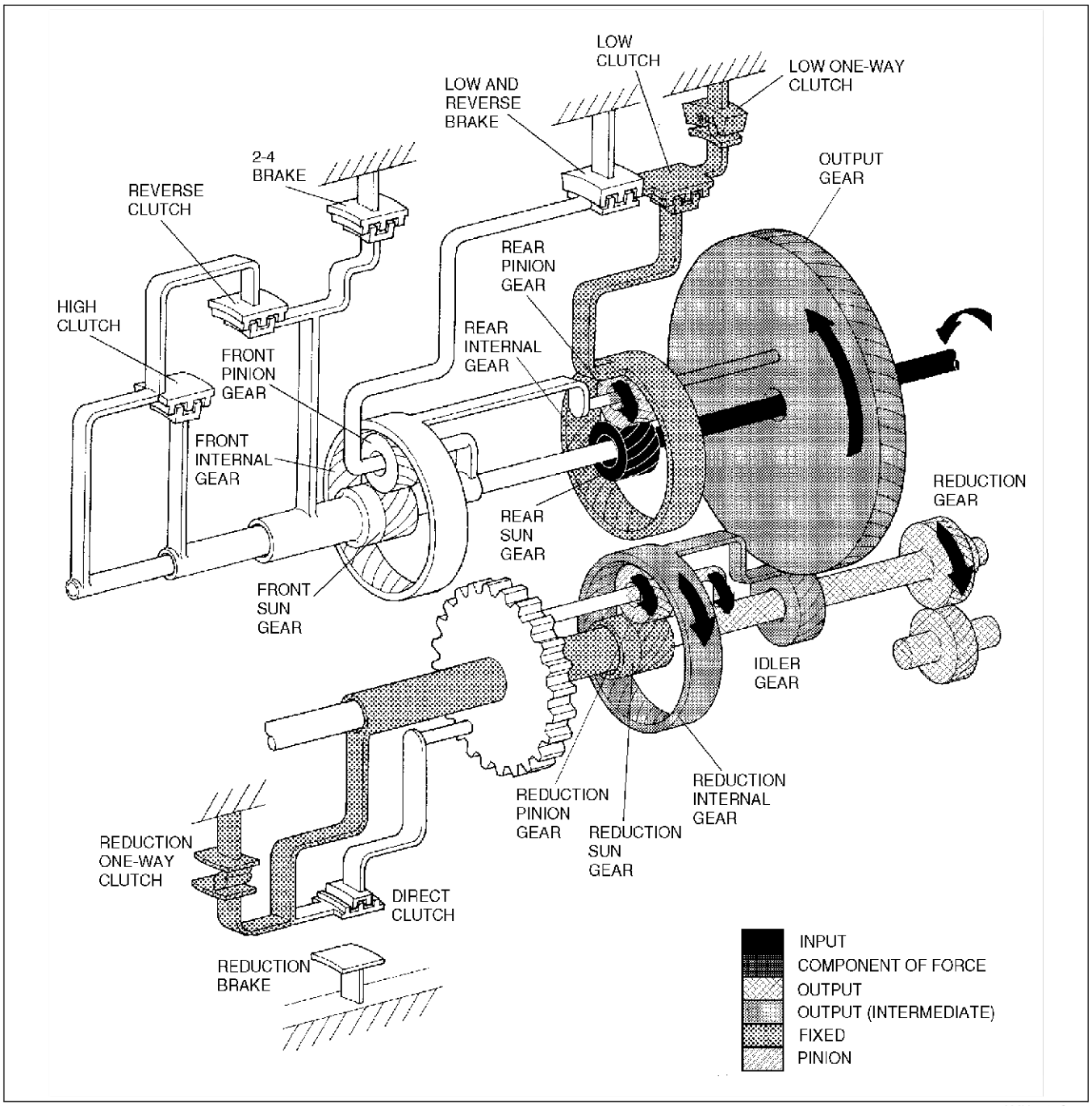

AMU0517S007

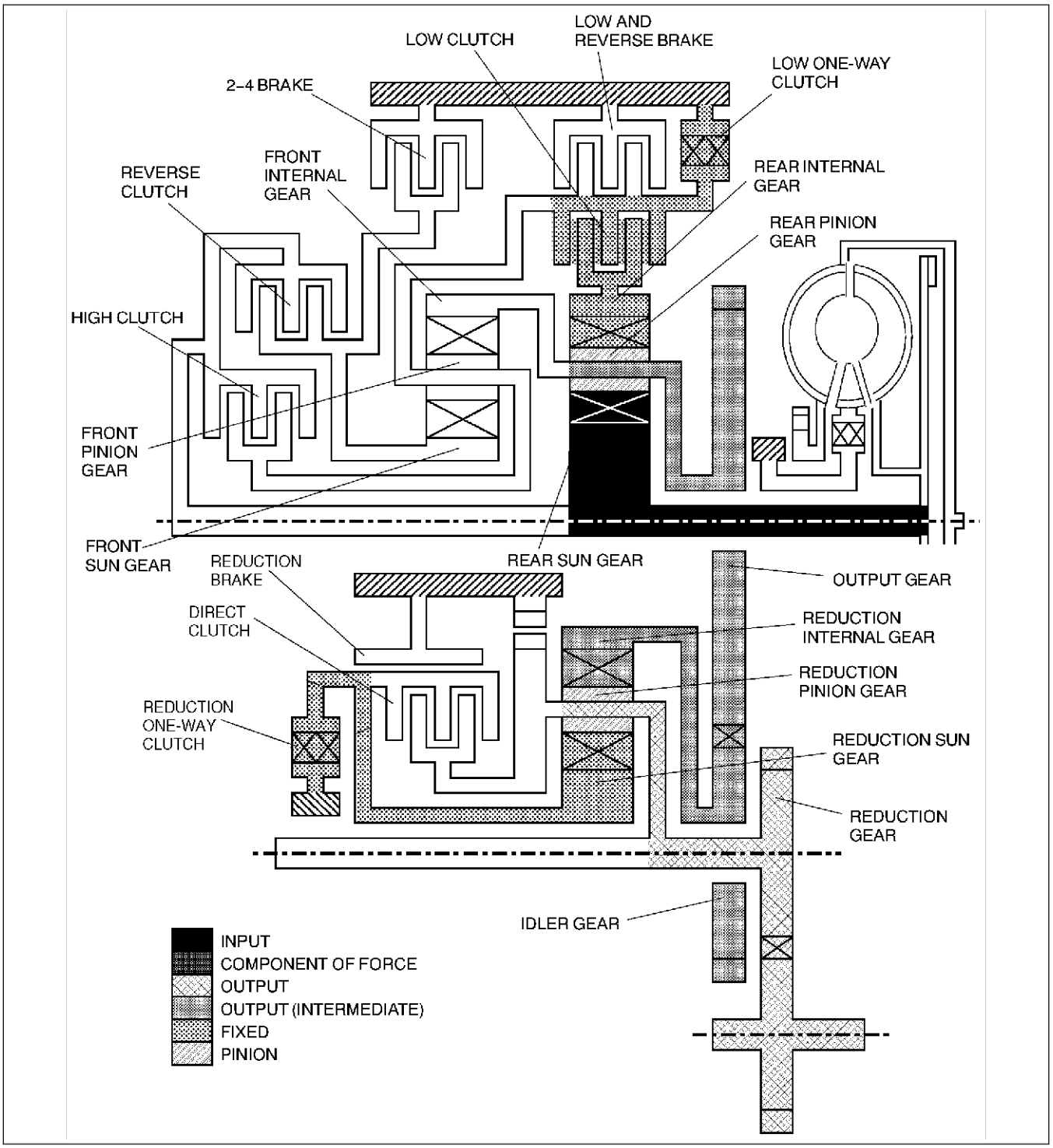

AMU0517S008

K2

2GR (D, S, L range)

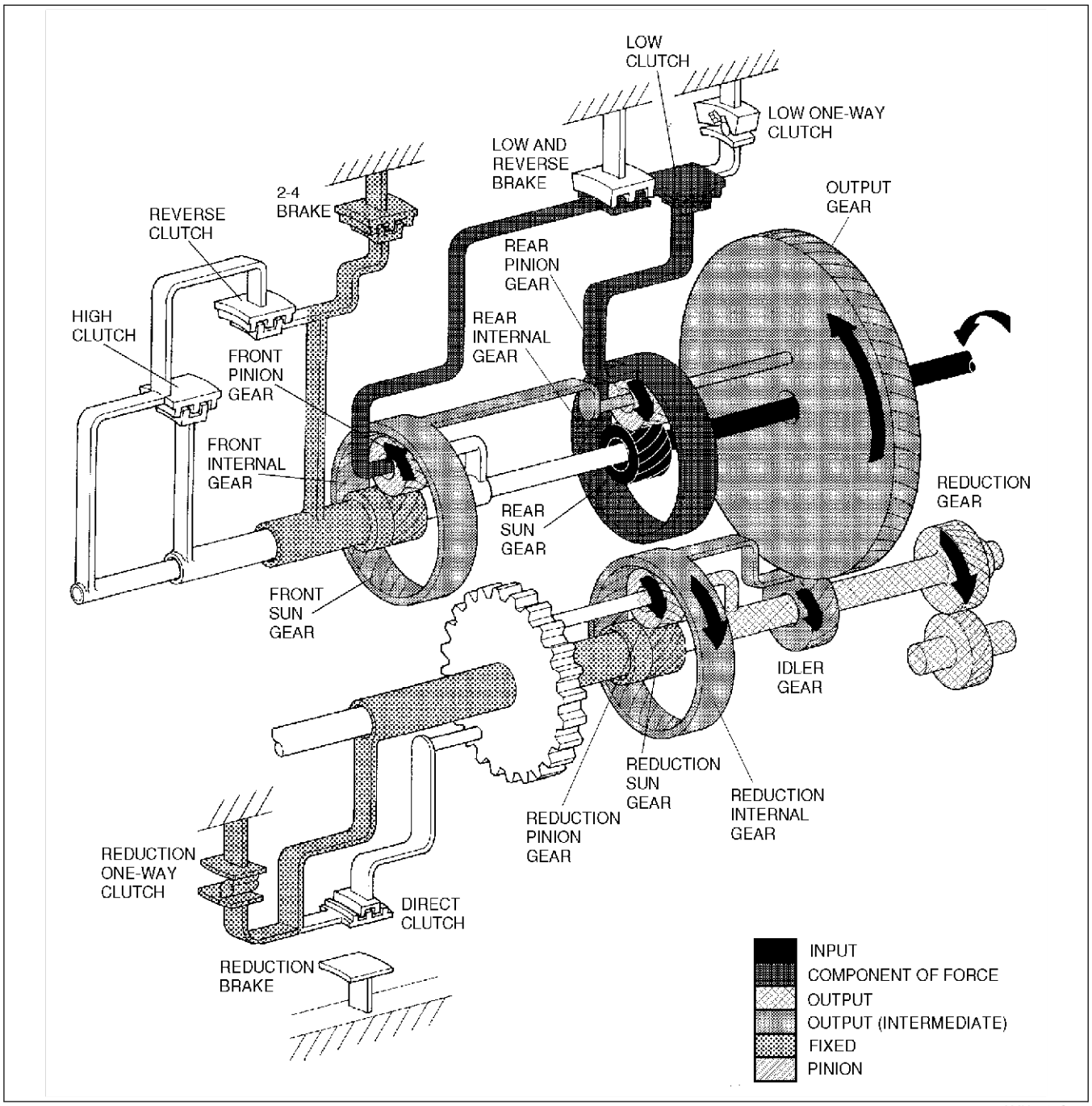

AMU0517S009

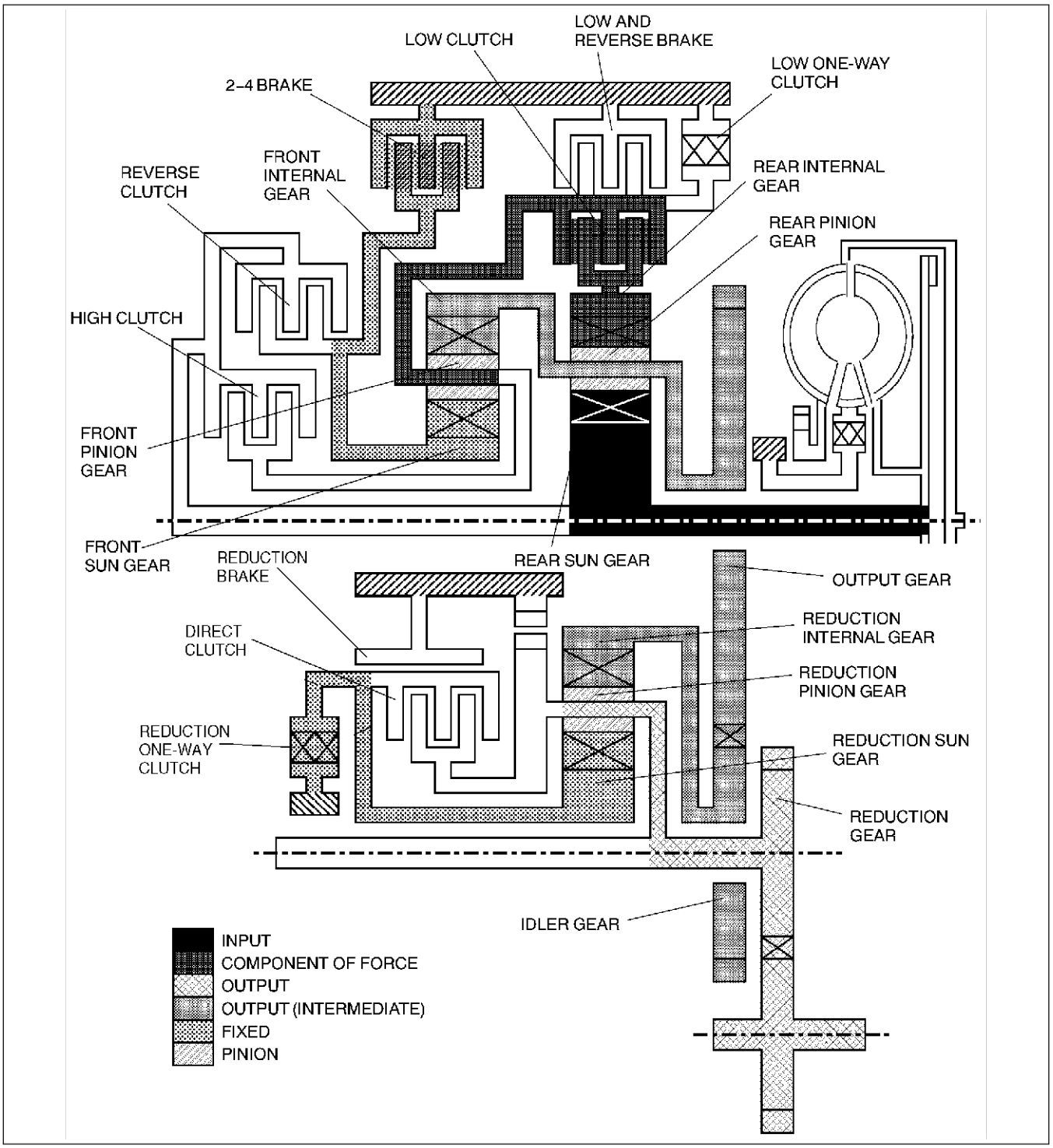

AMU0517S010

K2

2GR (L range HOLD)

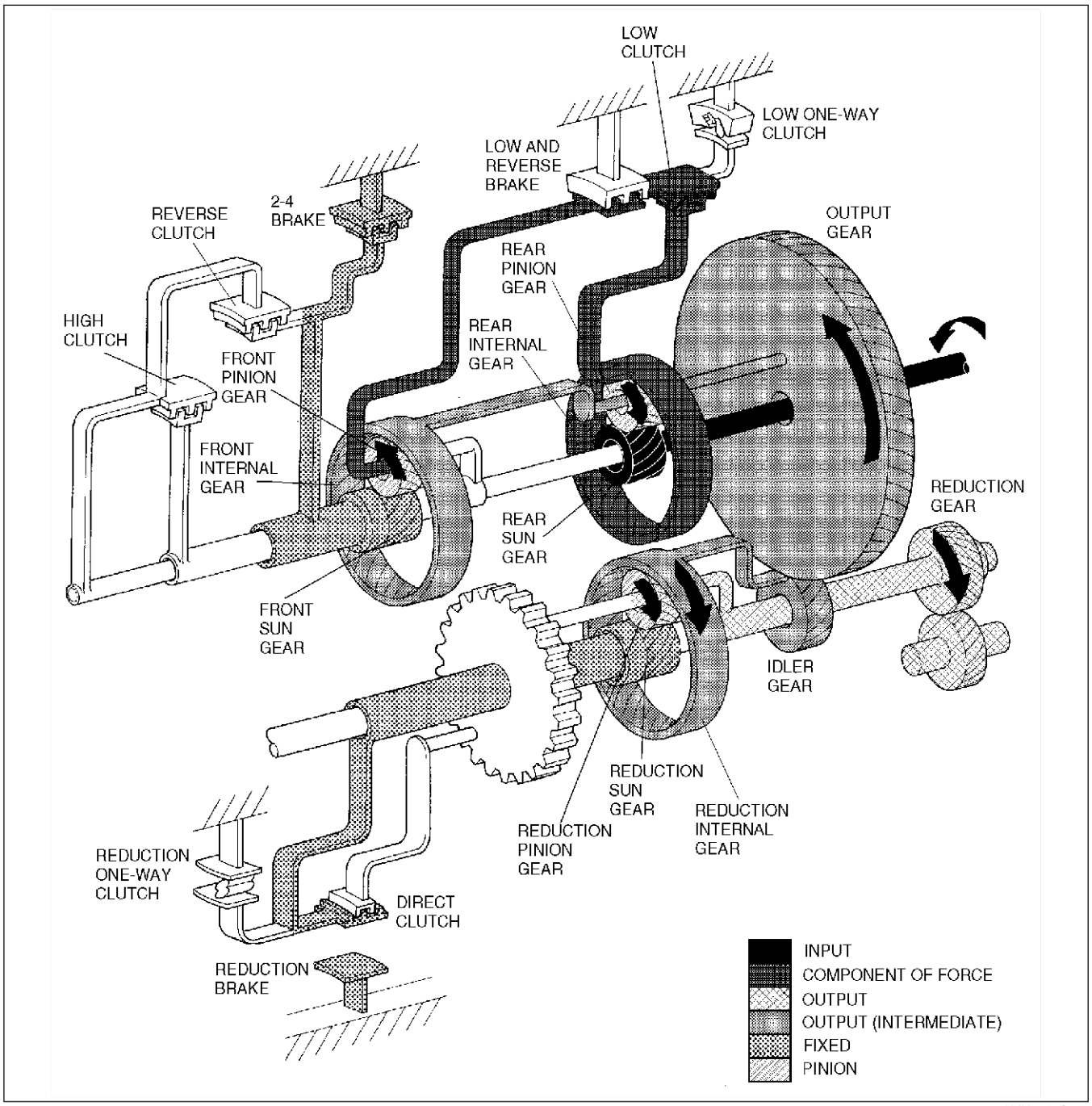

AMU0517S011

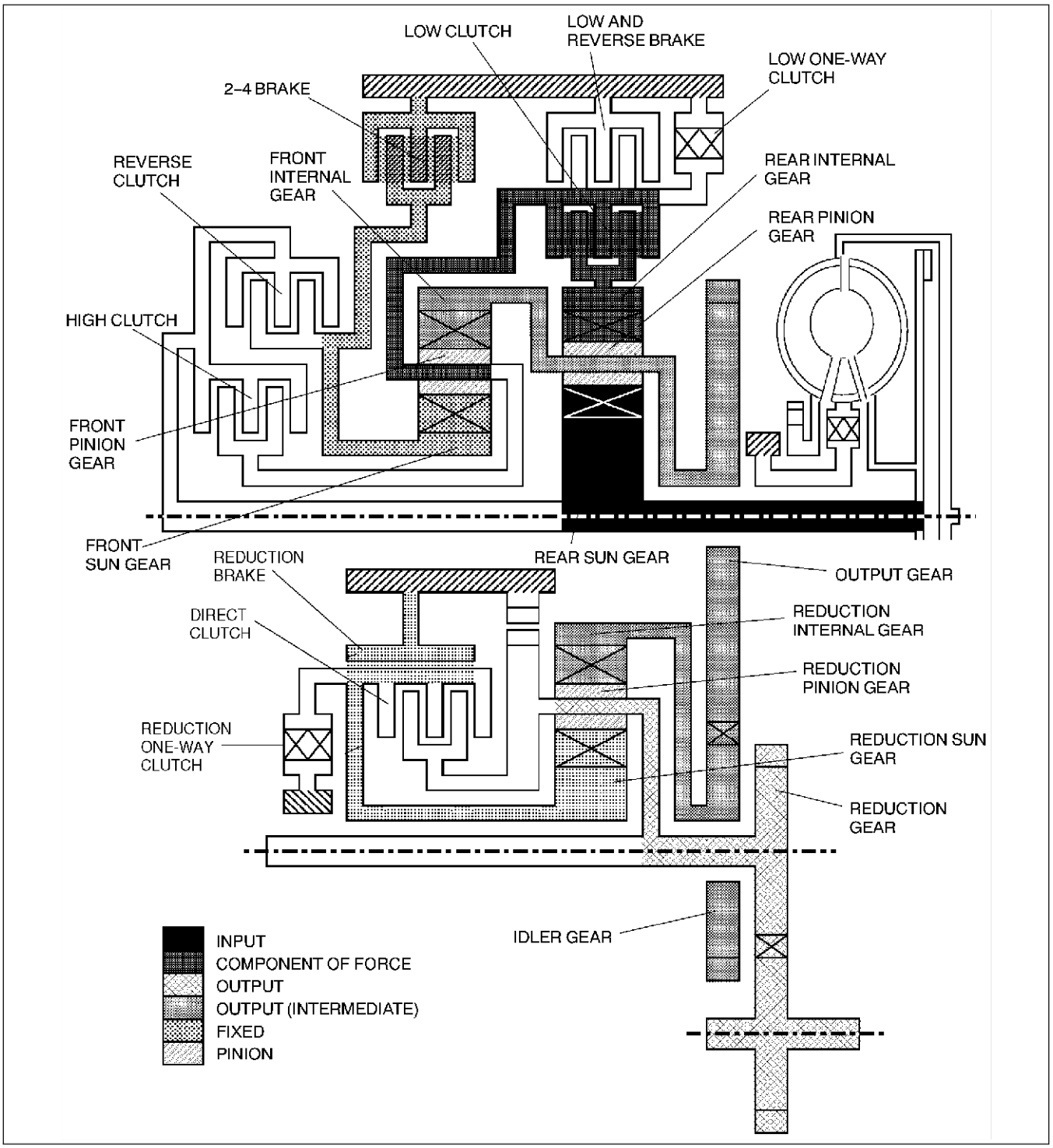

AMU0517S012

K2

3GR (D, S range)

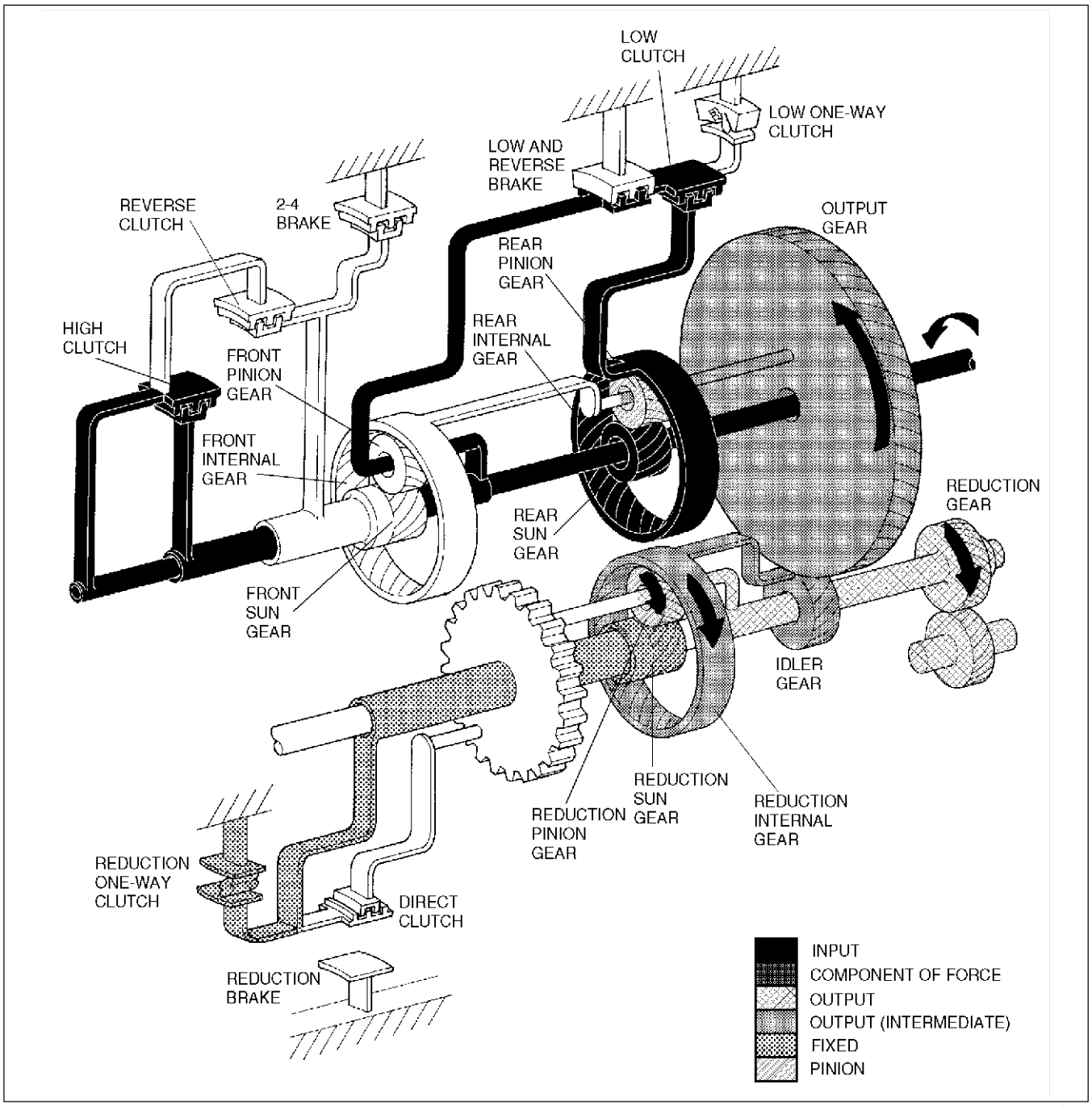

AMU0517S013

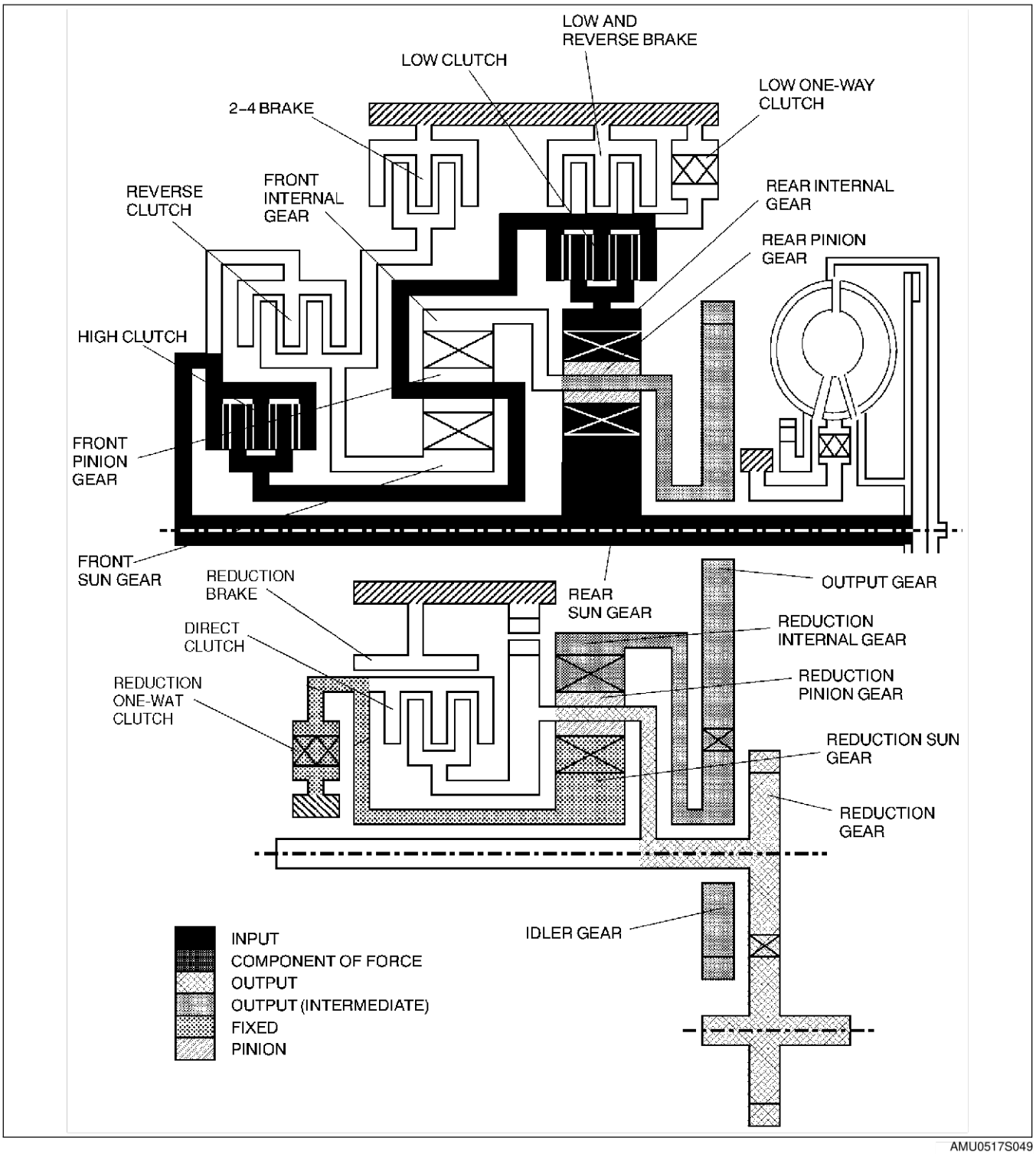

AMU0517S049

K2

3GR (S range HOLD, L range)

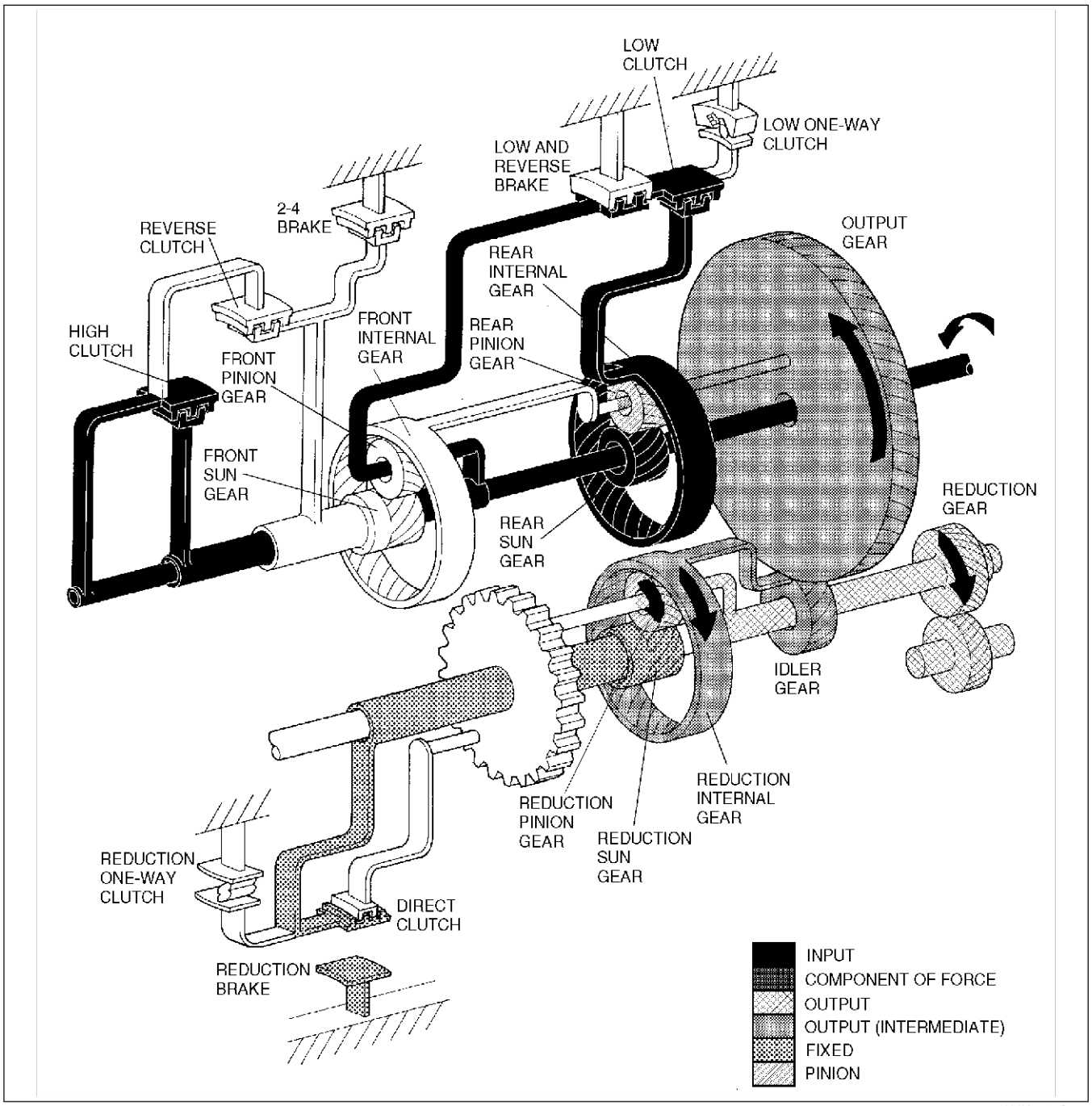

AMU0517S050

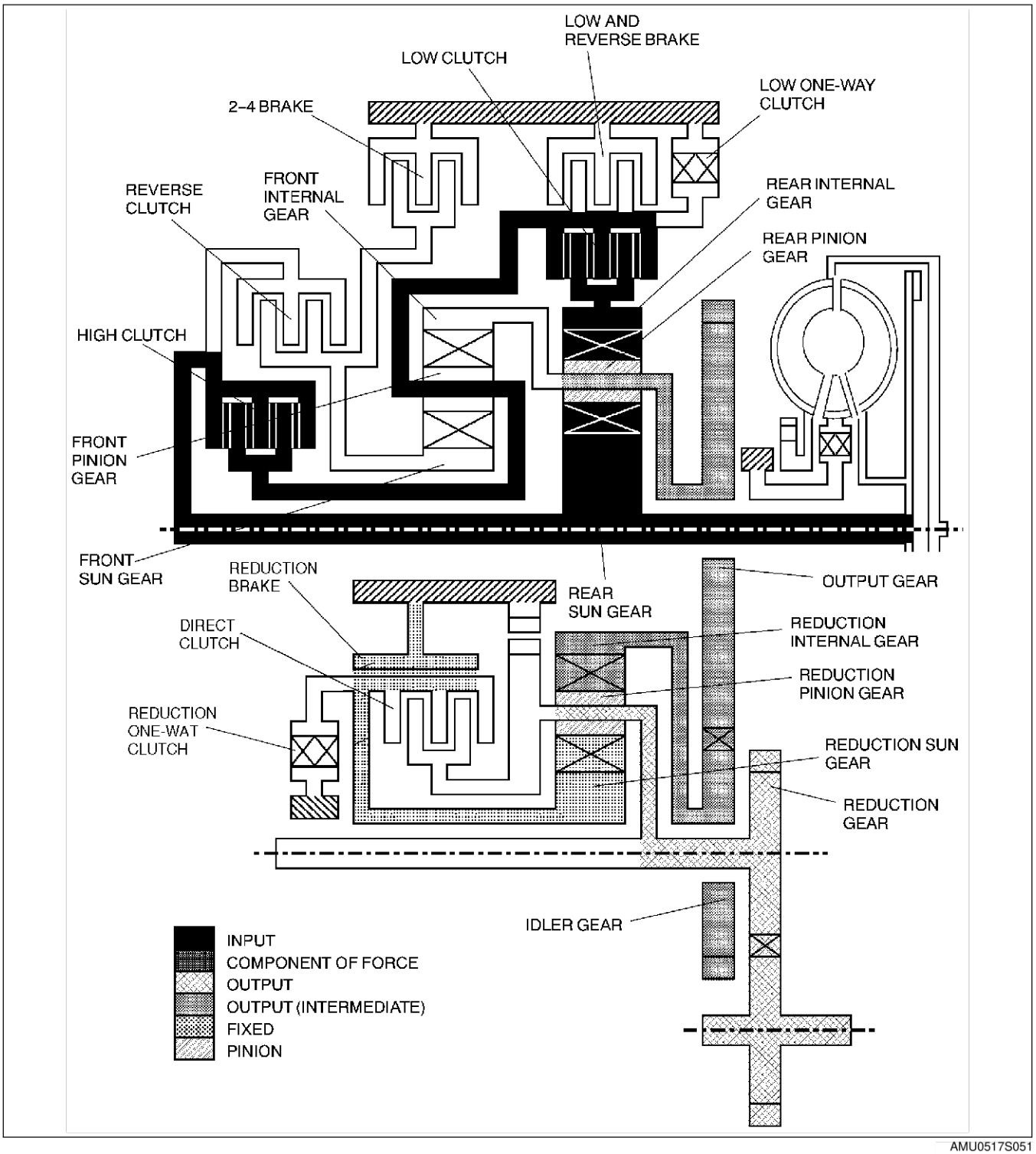

AMU0517S051

K2

4GR (D, S range)

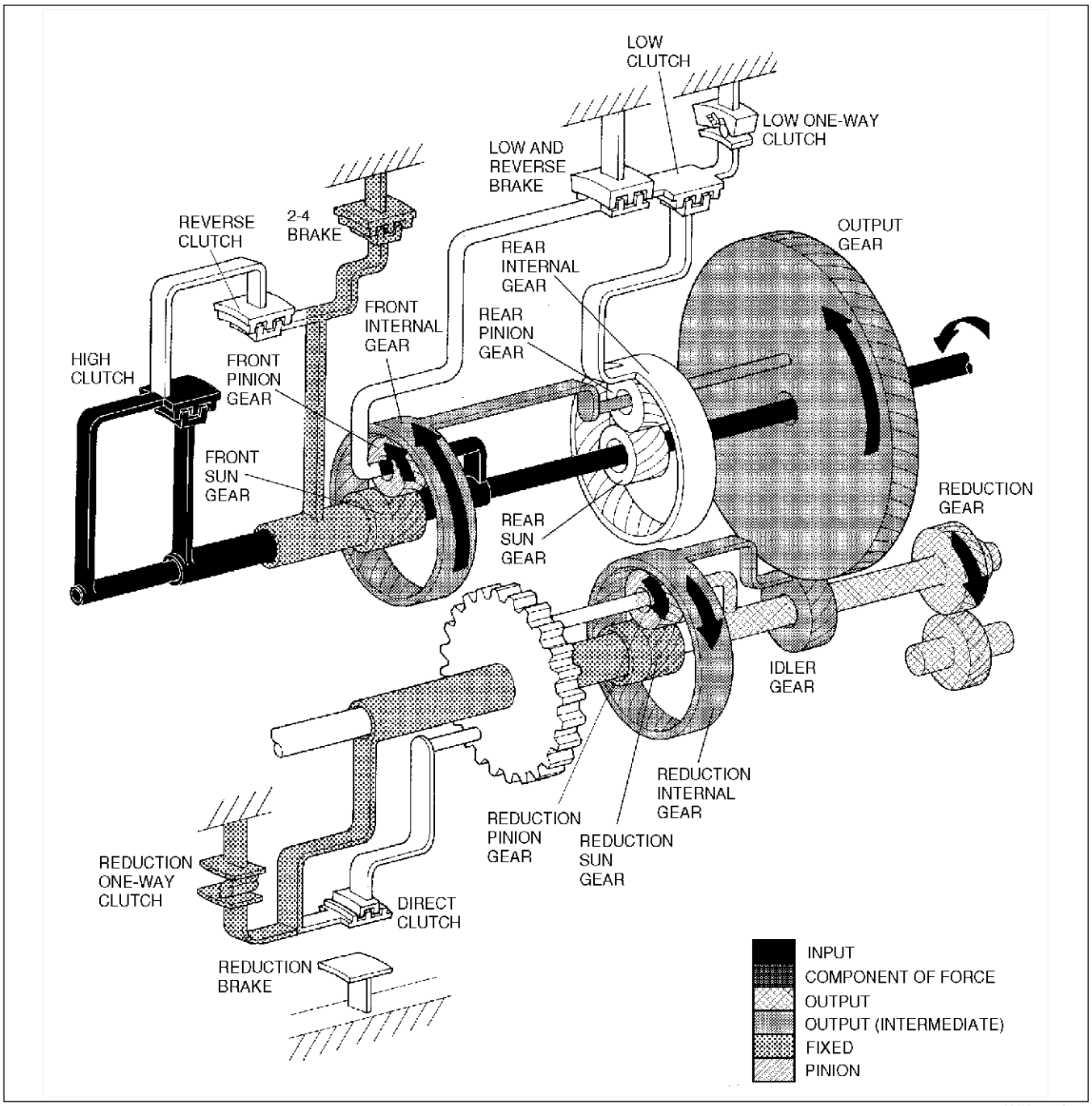

AMU0517S052

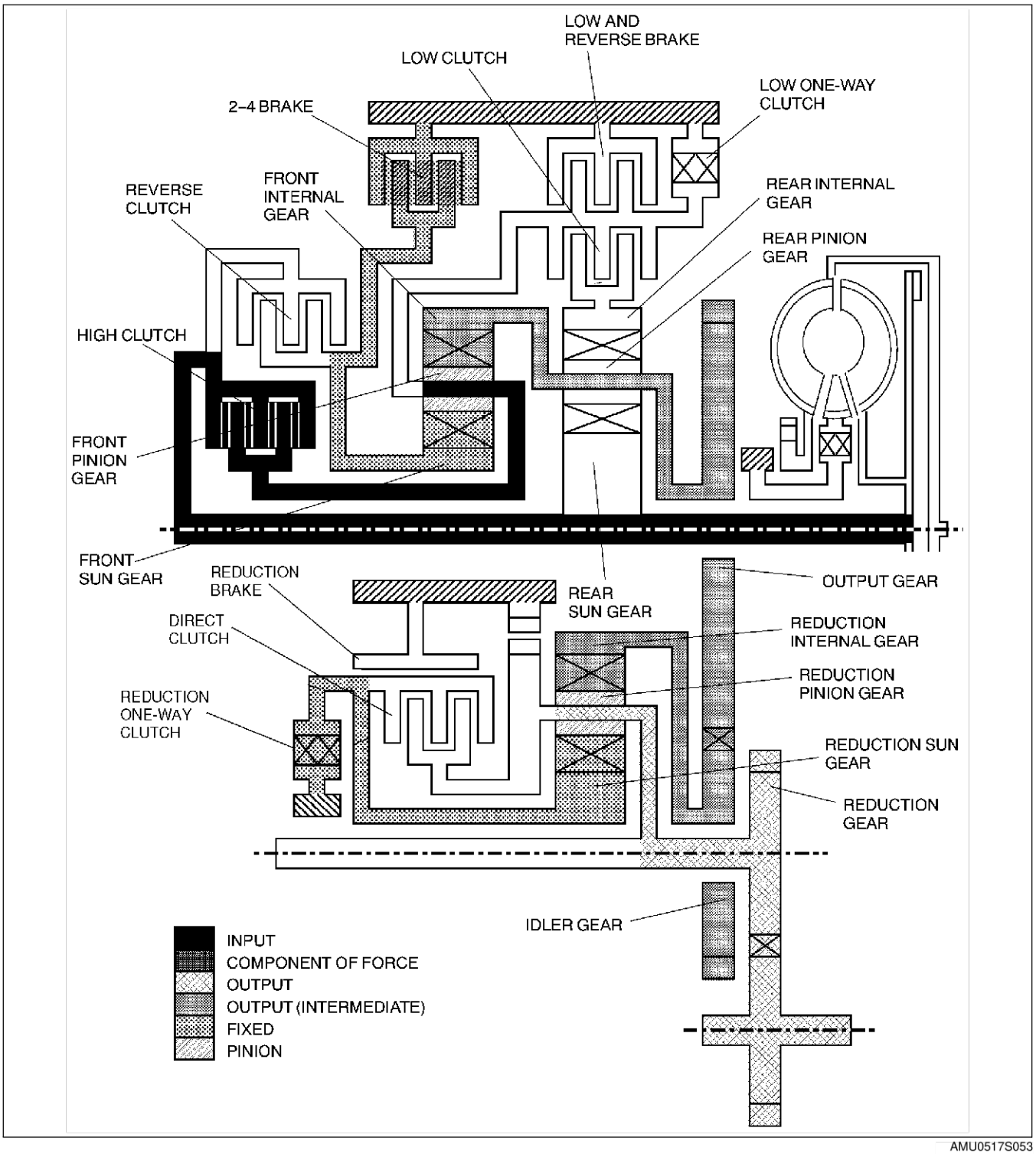

AMU0517S053

K2

4GR (D range HOLD, S, L range)

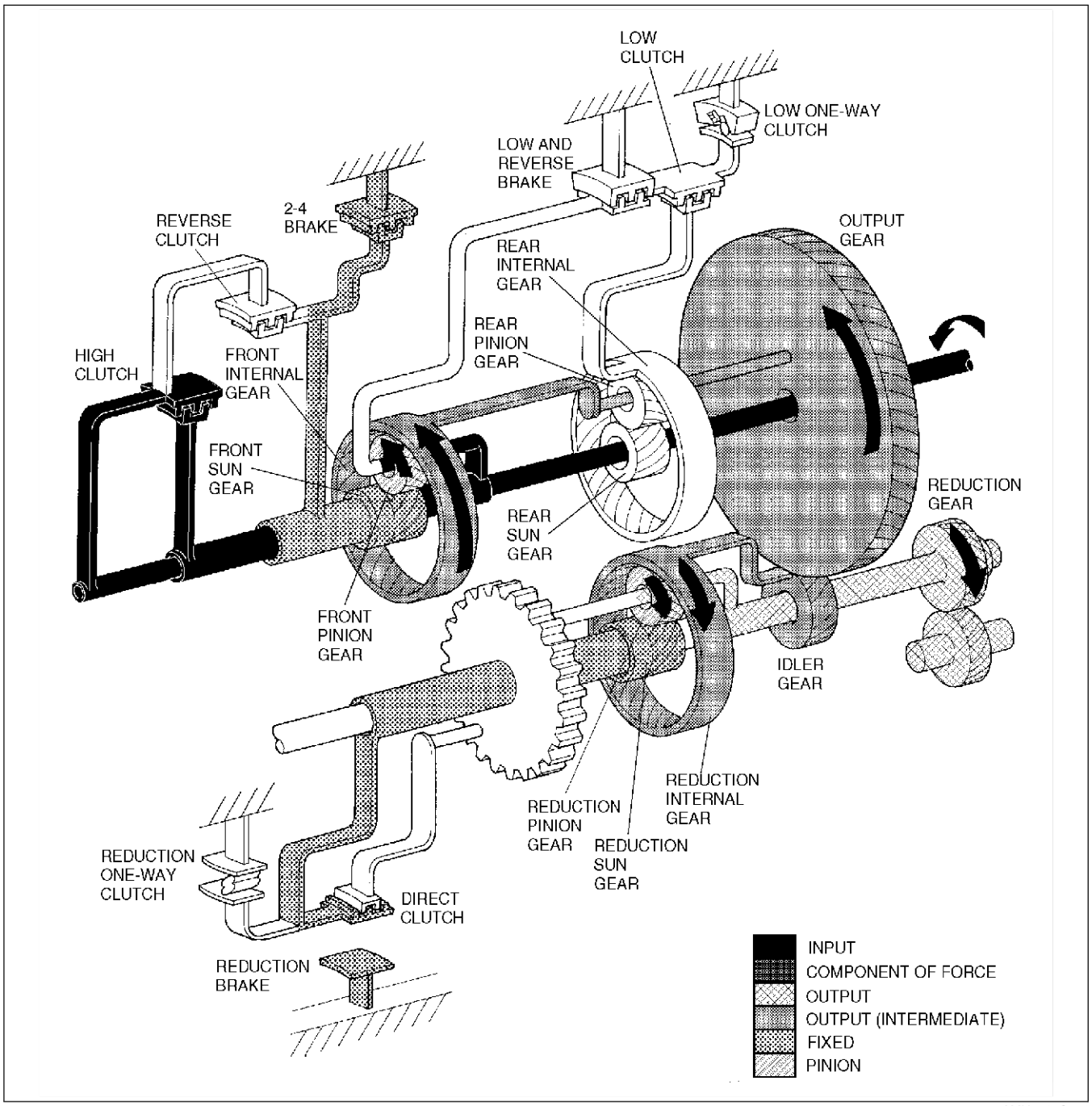

AMU0517S054

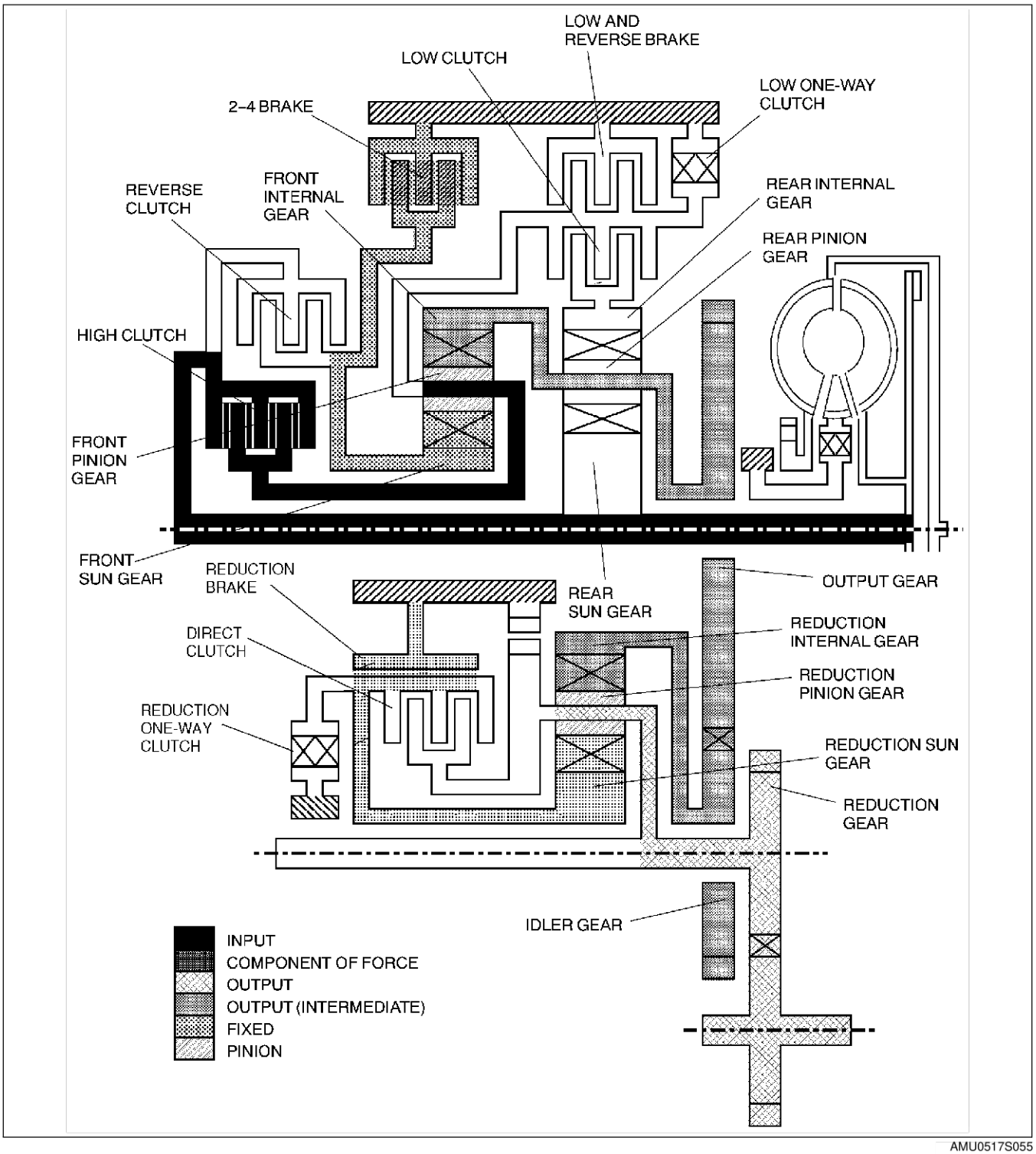

AMU0517S055

K2

5GR

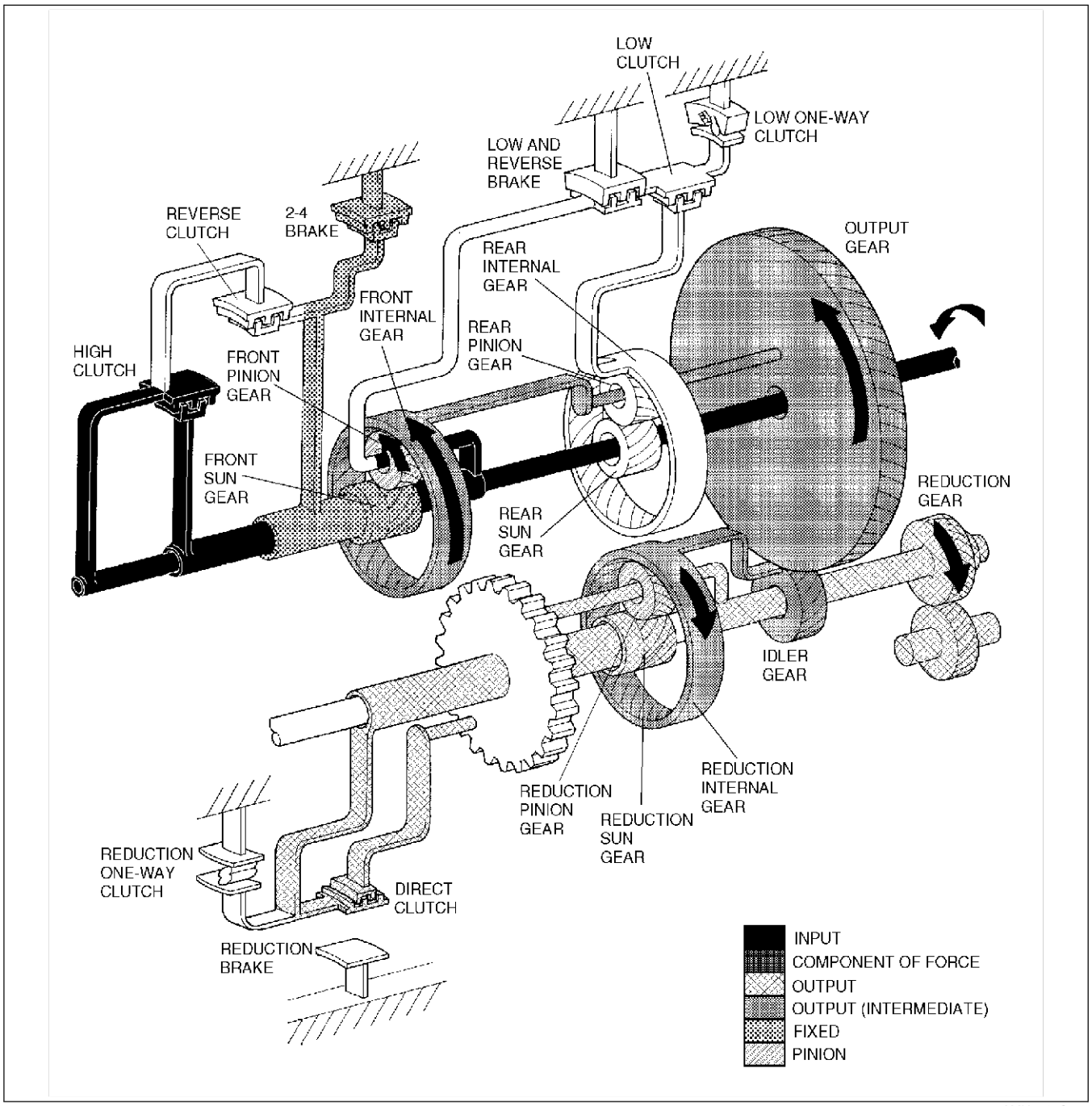

AMU0517S056

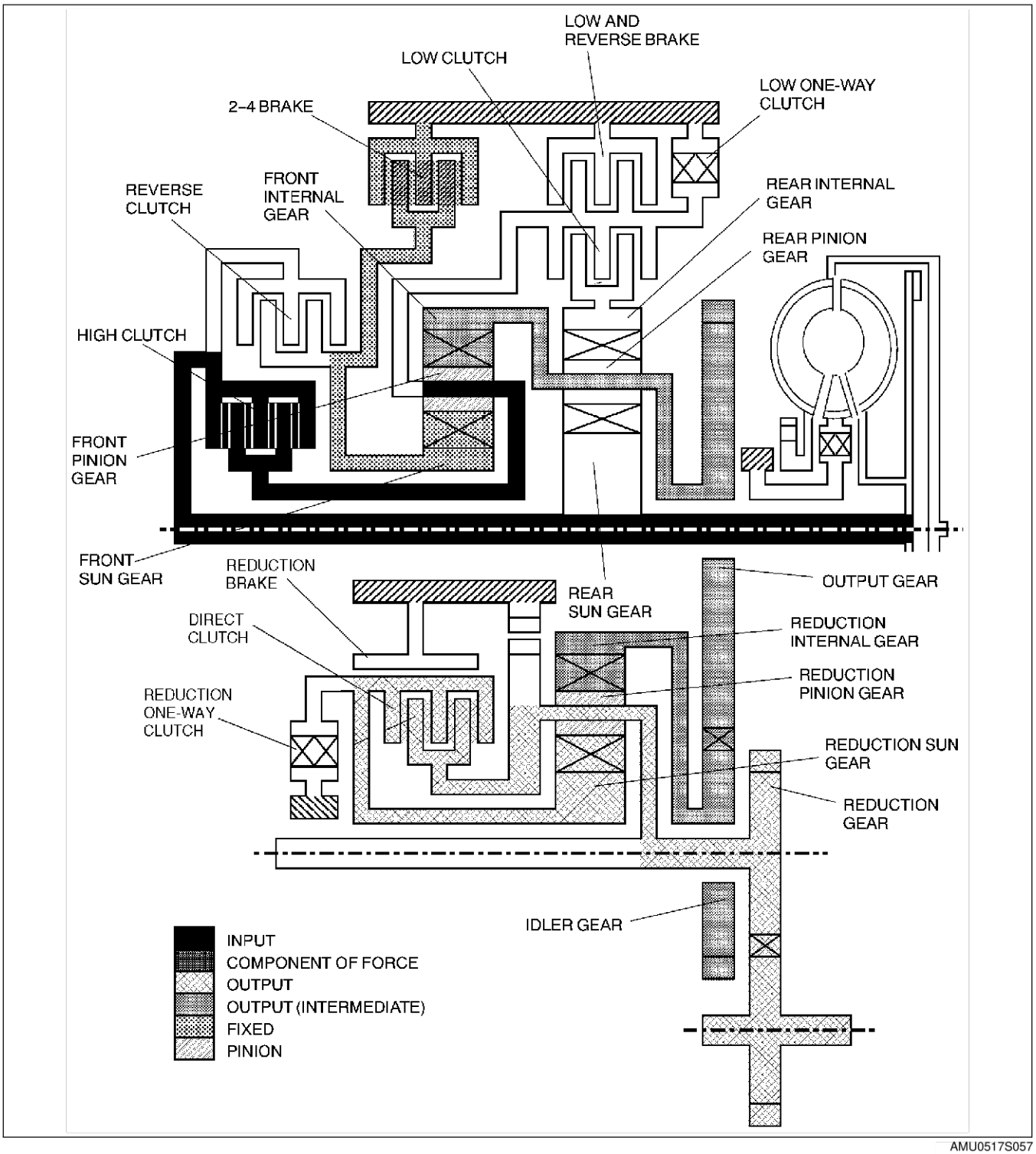

AMU0517S057

K2

R position

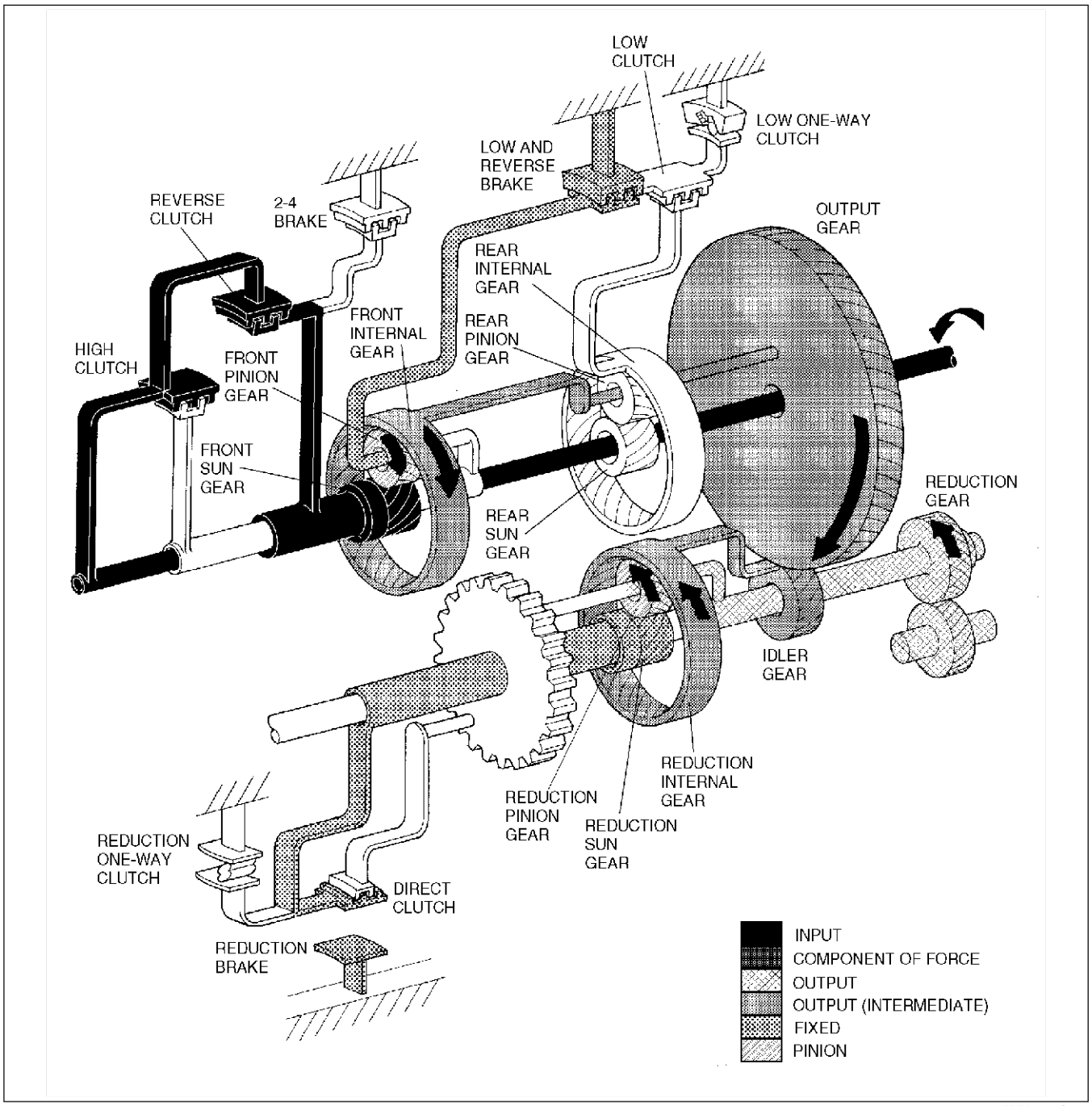

AMU0517S058

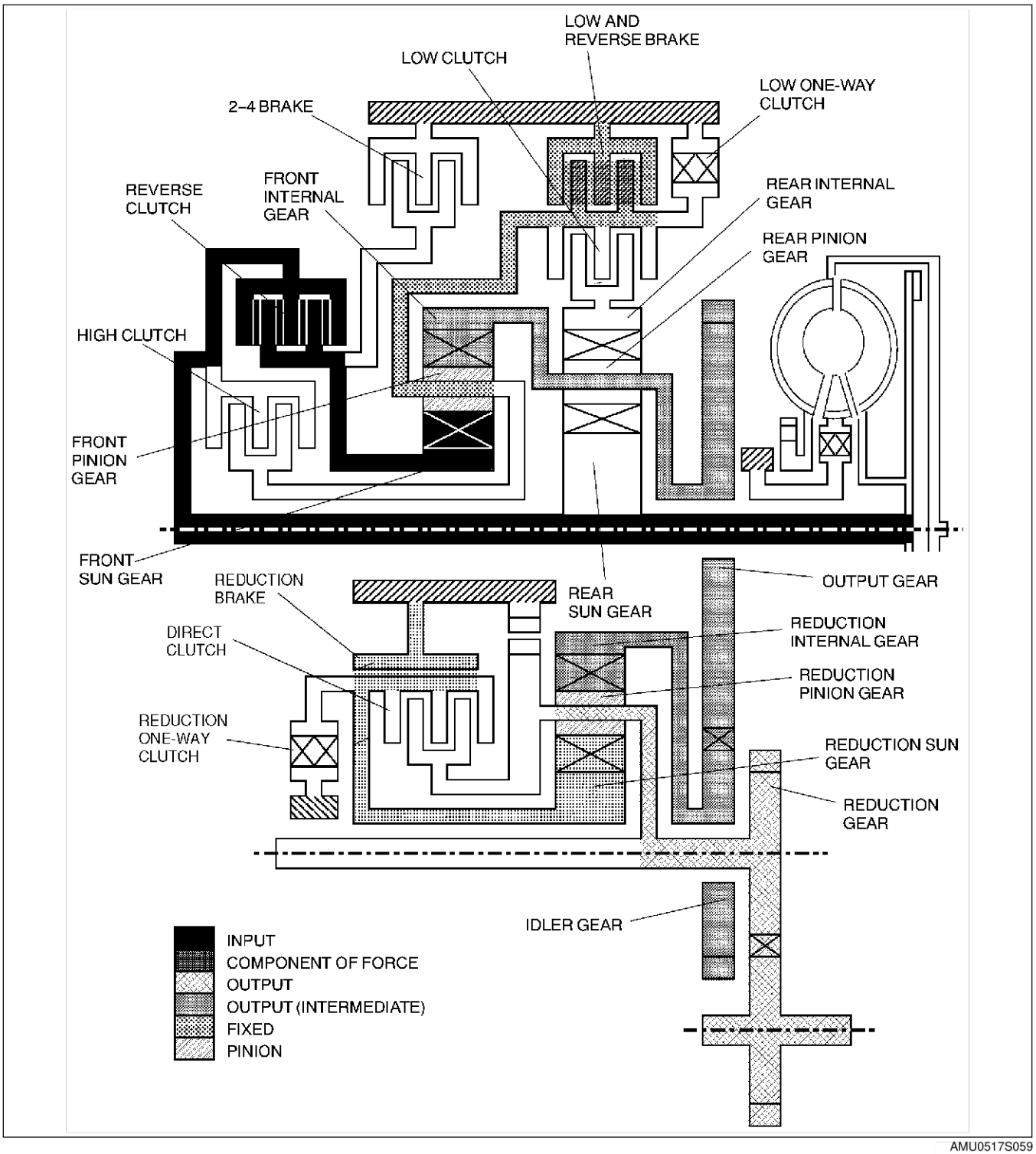

AMU0517S059

K2

R position (Reverse inhibition control)

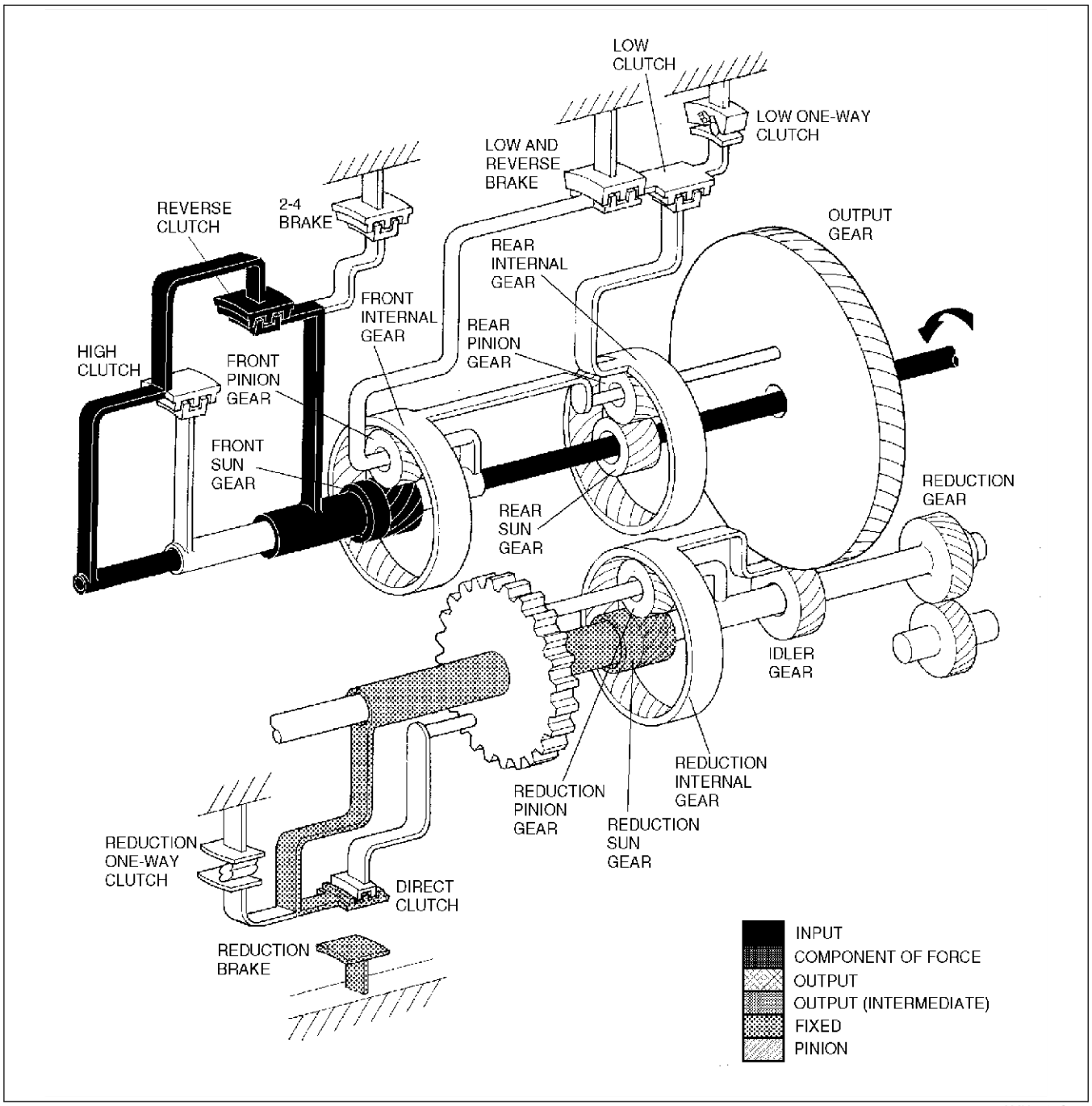

AMU0517S060

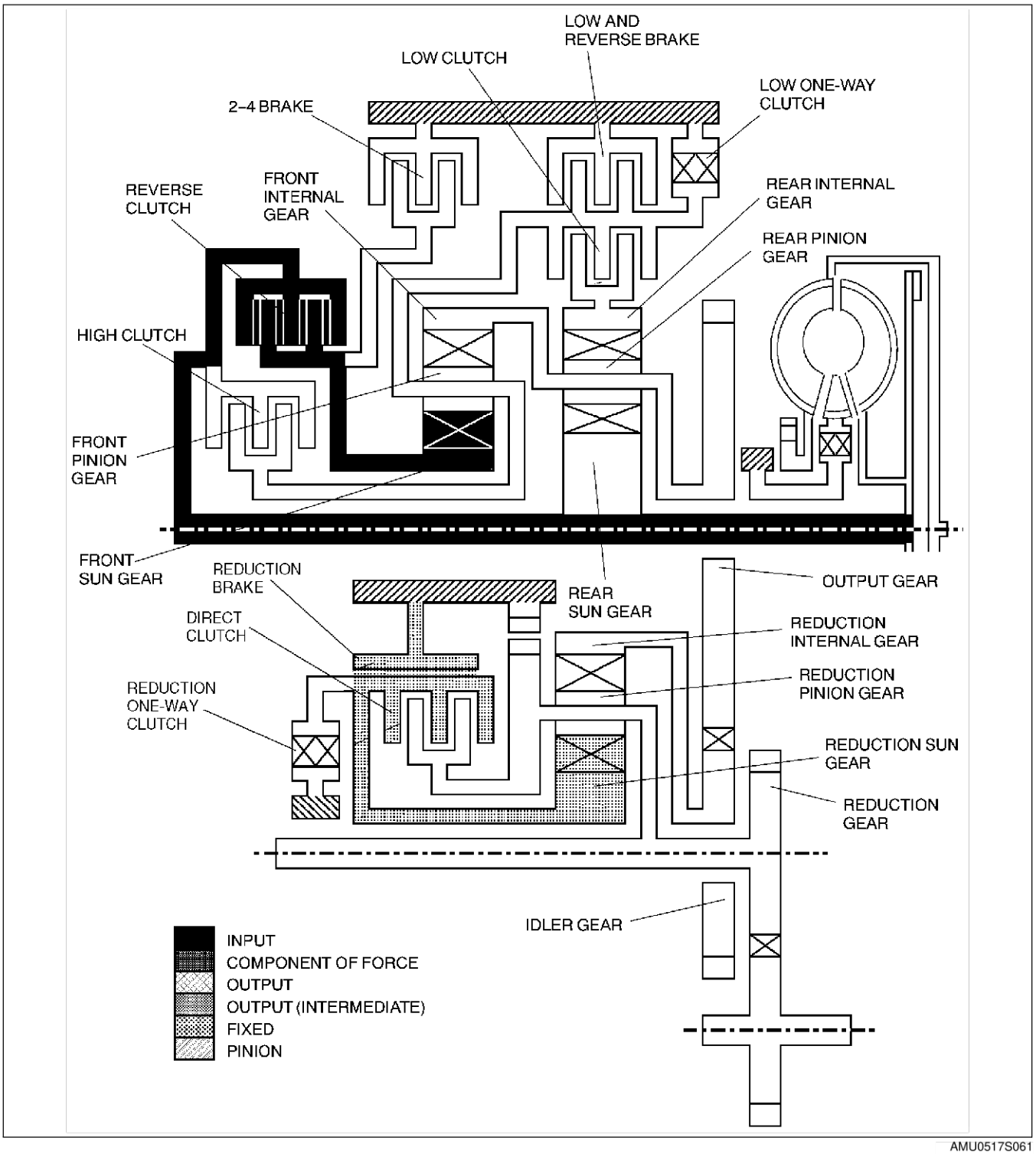

AMU0517S061

End Of Ste

K2

TORQUE CONVERTER DESCRIPTION

AME571419100W01

Outline

- The JA5A-EL uses a three-element, single-gear, two-phase torque converter with torque converter clutch (TCC) mechanism.
- The torque converter efficiently matches the output characteristic of AJ engine.
- By matching the output characteristics of the engine in order to optimize the configuration of the impellers, the torque converter increases the capacity coefficient in the practical range, thereby improving drivability and fuel economy.
- The TCC mechanism under certain conditions transmits the drive force by automatically connecting the pump impeller with the turbine runner as opposed to using fluid. Therefore it prevents the torque converter from slipping.

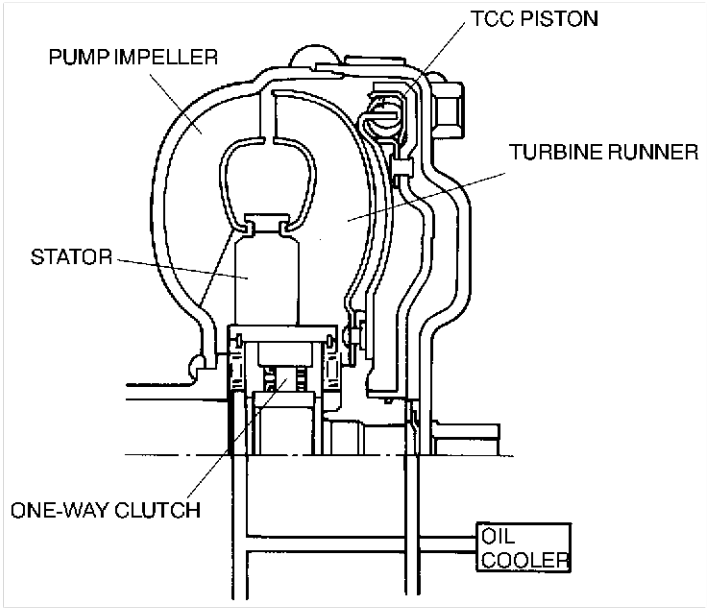

AMU0517S014

End Of Sec

OIL PUMP DESCRIPTION

AME571419220W01

Outline

- The light-weight, compact, and quiet trochoid type oil pump reduces pump driving torque.
- The direct drive type oil pump is placed behind the torque converter.

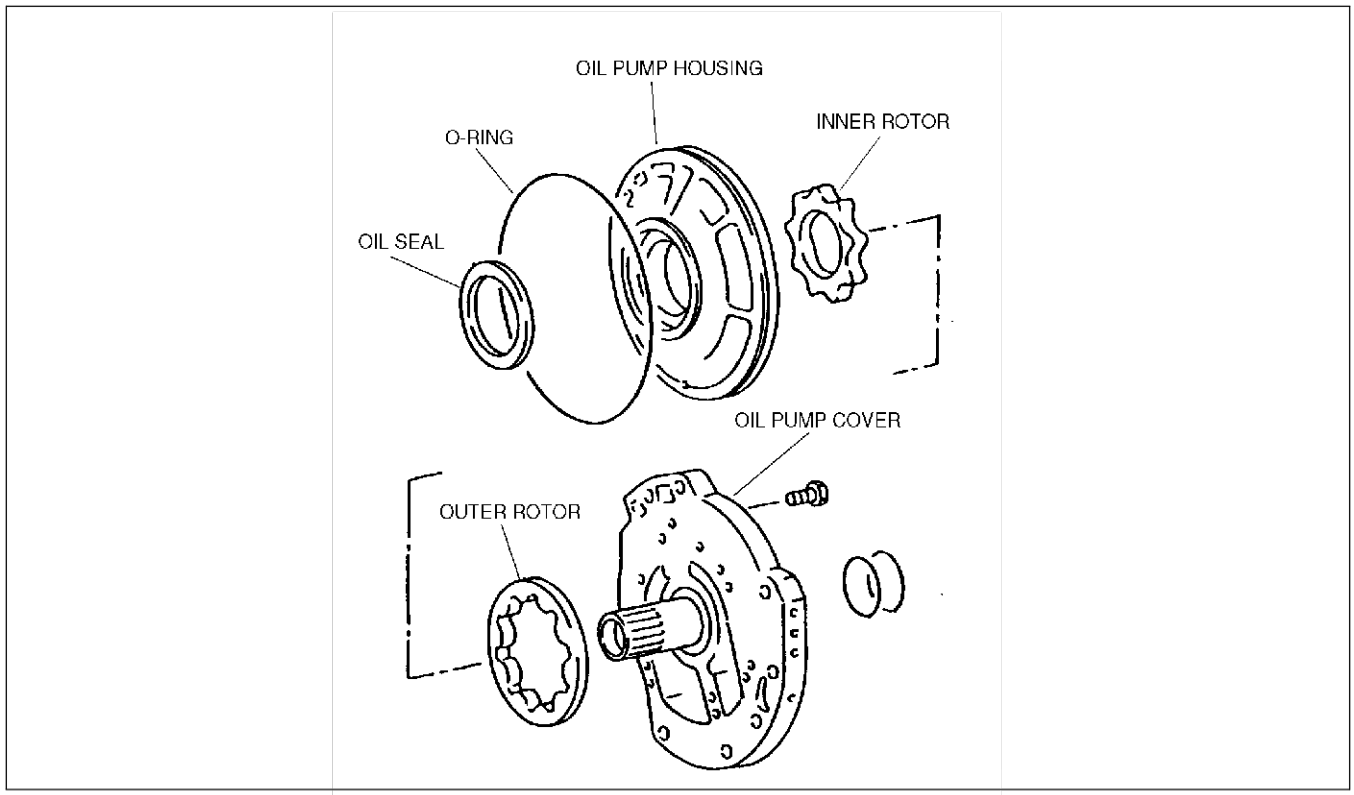

AMU0517S015

Structure/Operation

- The outer rotor and inner rotor are installed in the oil pump housing.
- The inner rotor in the oil pump housing is driven by the torque converter.
- When the inner rotor in the oil pump rotates, the ATF is drawn to the oil pump. The discharge amount is proportional to the rotating speed of the torque converter.

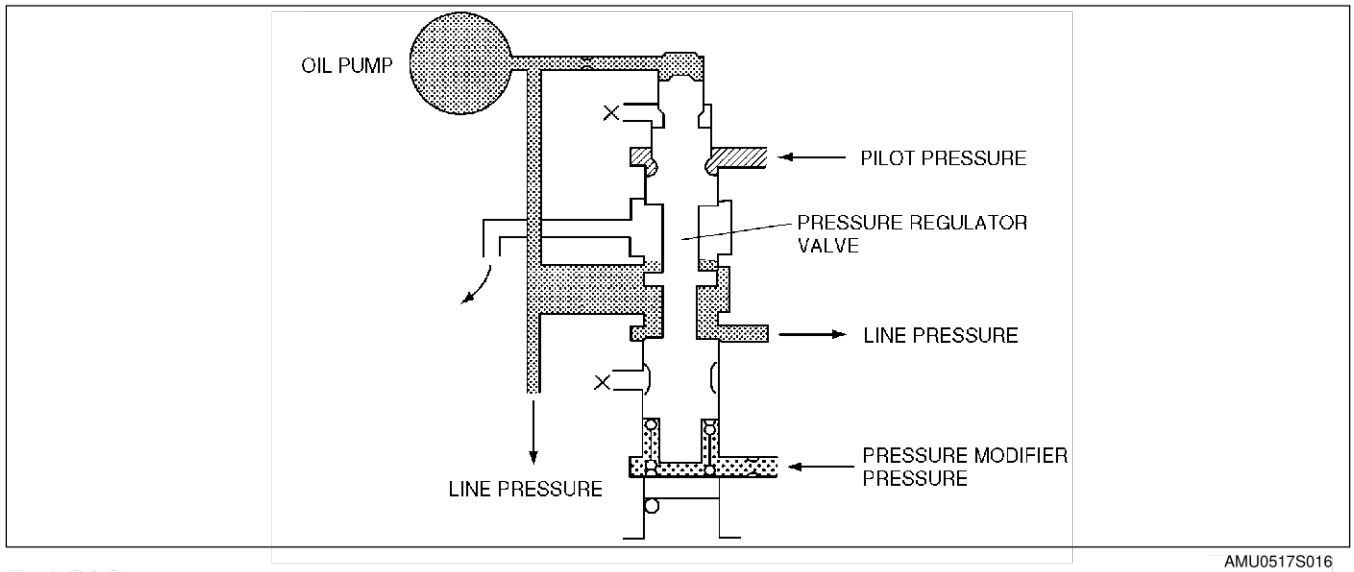

AMU0517S016

End Of Ste

CENTRIFUGAL BALANCE CLUTCH DESCRIPTION

AME571401030W08

Function

- The centrifugal balance clutch, which replaces the conventional piston check ball, cancels centrifugal oil pressure generated during clutch drum rotation to prevent the clutch drag-engagement and to stabilize piston pressure during full rotation.

Construction/Operation

- Centrifugal balance clutch chambers are installed opposite the clutch chambers in the low and high clutches. The centrifugal balance clutch chambers are constantly filled with ATF from the exclusive hydraulic passage of the oil pump.

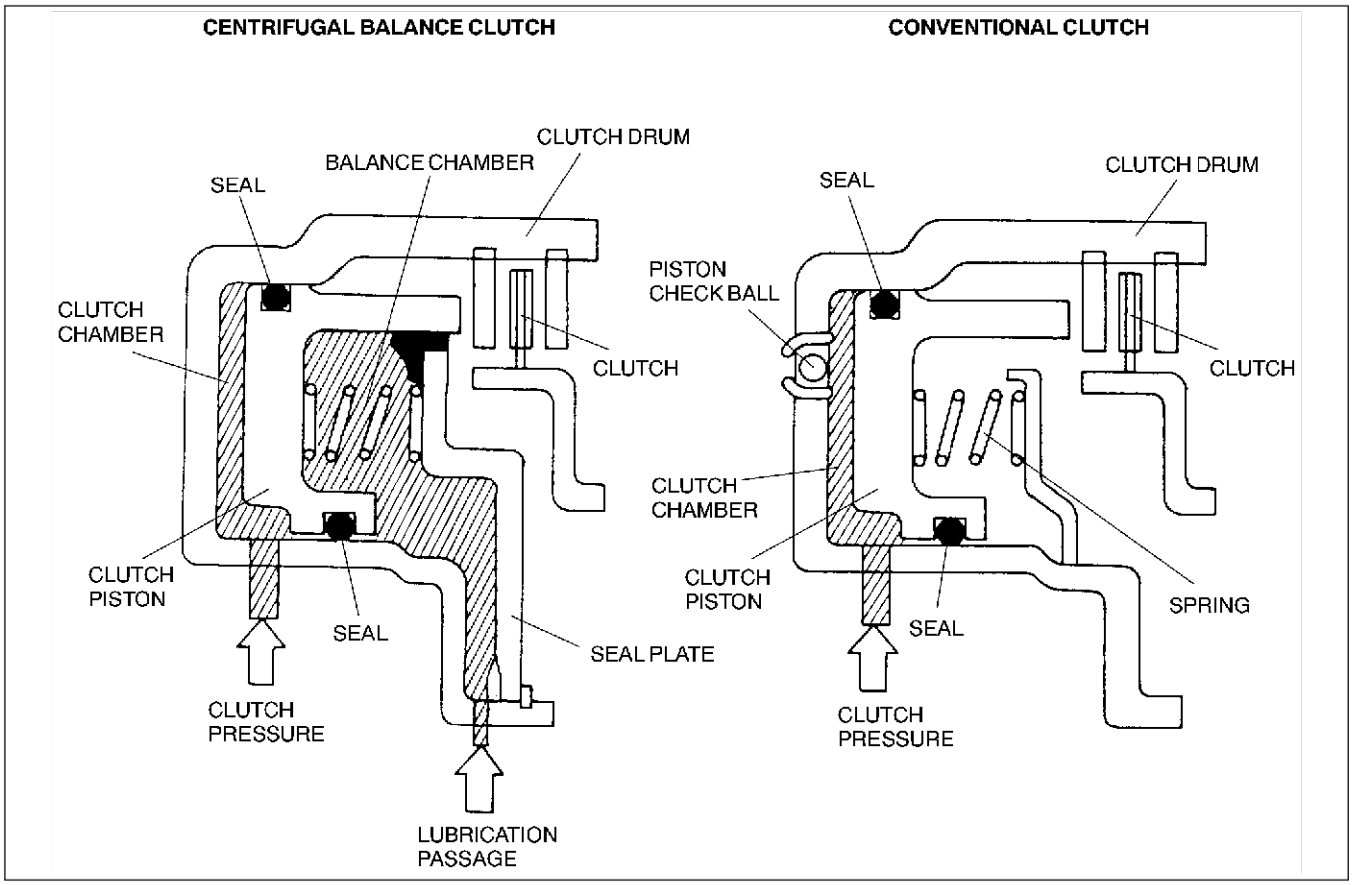

AMU0517S018

When the clutch pressure is not applied

- When the clutch drum rotates, centrifugal force acts on the residual ATF in the clutch chamber to push against the piston. However, centrifugal force also acts on the ATF filled in the centrifugal balance clutch chamber to push back the piston. As a result, the two forces are eliminated and the piston remains stationary, thus preventing clutch engagement.

When the clutch pressure is applied

- When clutch pressure is applied to the clutch chamber, the clutch pressure overcomes the oil pressure and the spring force in the opposite centrifugal balance clutch chamber, and pushes the piston to engage the clutches. Because the centrifugal force acting on the clutch pressure in the clutch chamber is canceled by another centrifugal force acting on the ATF filled in the centrifugal balance clutch chamber, the influence of the centrifugal force created by the clutch drum revolution speed is eliminated. As a result, stable piston pushing force is obtained in all rotation ranges, and smoother shifts can be made.

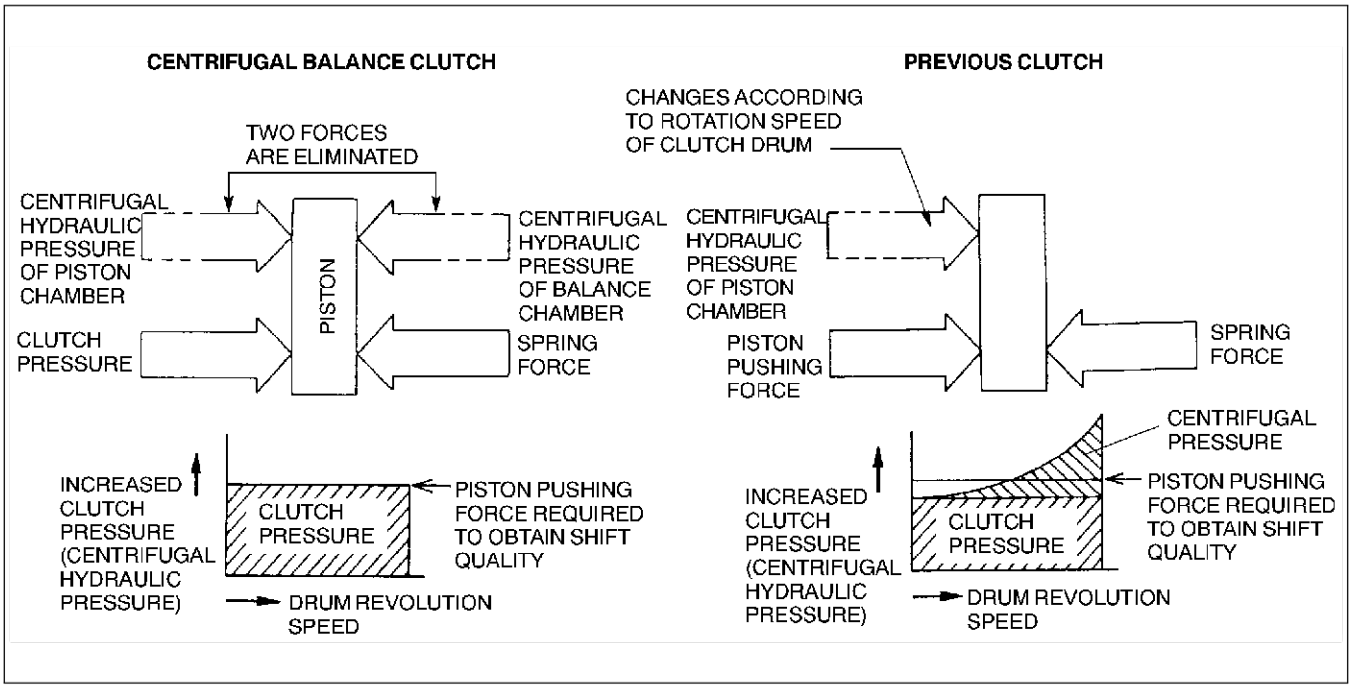

AMU0517S019

End Of Ste

CONTROL VALVE BODY DESCRIPTION

AME571421100W01

Outline

- The control valve body is composed of four bodies: the sub lower body, lower body, internal body, and the upper body.
- To minimize the component in the control valve body, clutch engagement is electronically controlled, hydraulic circuits were simplified and the valve types reduced.

K2

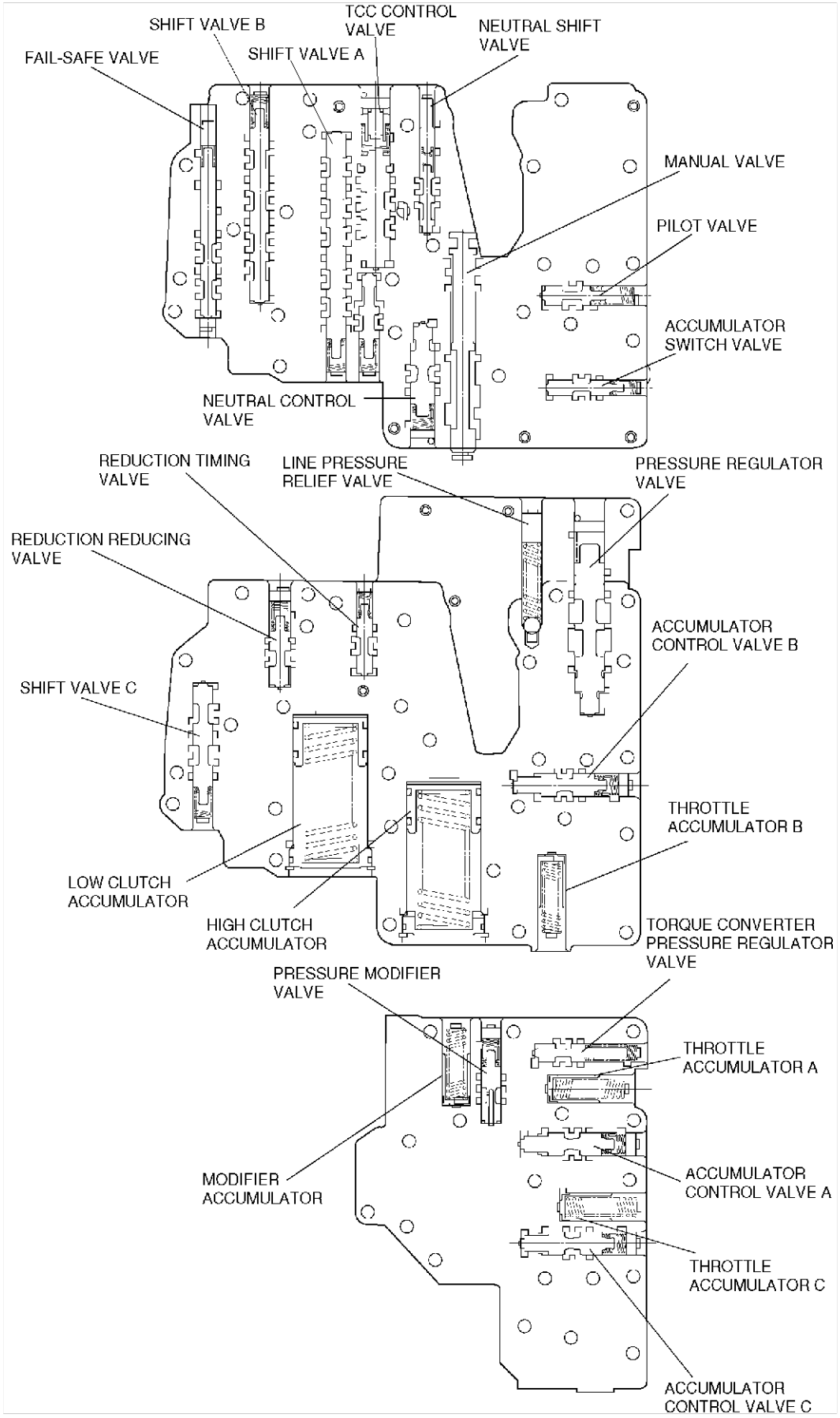

AMU0517S064

End Of Sec

TRANSAXLE FLUID TEMPERATURE (TFT) SENSOR DESCRIPTION

AME571419010W01

- The TFT sensor, which is installed in the transaxle case, detects the ATF temperature in the transaxle case, and sends the control signal to the TCM. The TCM controls the driving pattern and the torque converter clutch based on the signal from the TFT sensor.

Structure/Operation

- The TFT sensor is a thermistor type and the resistance changes according to the ATF temperature.
- The characteristic of the resistance is as shown in the figure below.
- The TFT sensor is integrated with the connector.

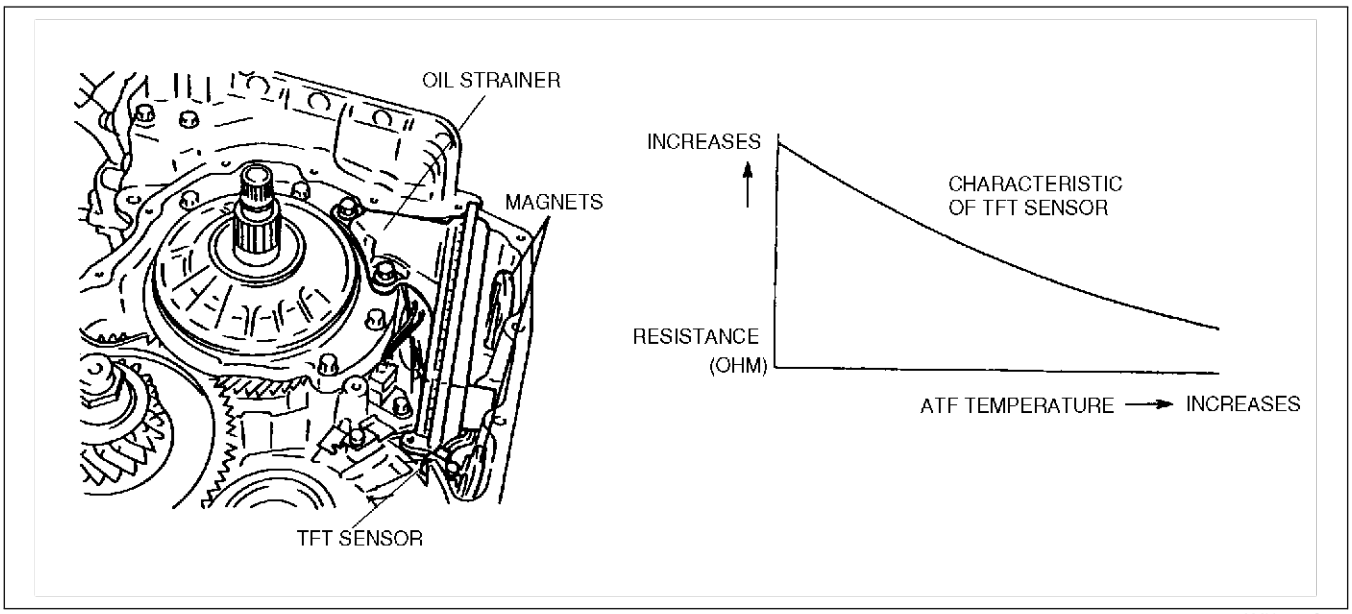

AMU0517S020

End Of Sie

INPUT/TURBINE SPEED SENSOR DESCRIPTION

AME571421550W01

Function

- A input/turbine speed sensor is located in the transaxle case and detects the rotating speed of the reverse clutch drum.

Construction/Operation

- The magnetic pickup type of input/turbine speed sensor is mounted in the transaxle case, next to the reverse clutch drum. It generates a 36-pulse signal for each rotation of the reverse clutch drum, and sends this signal to the TCM.

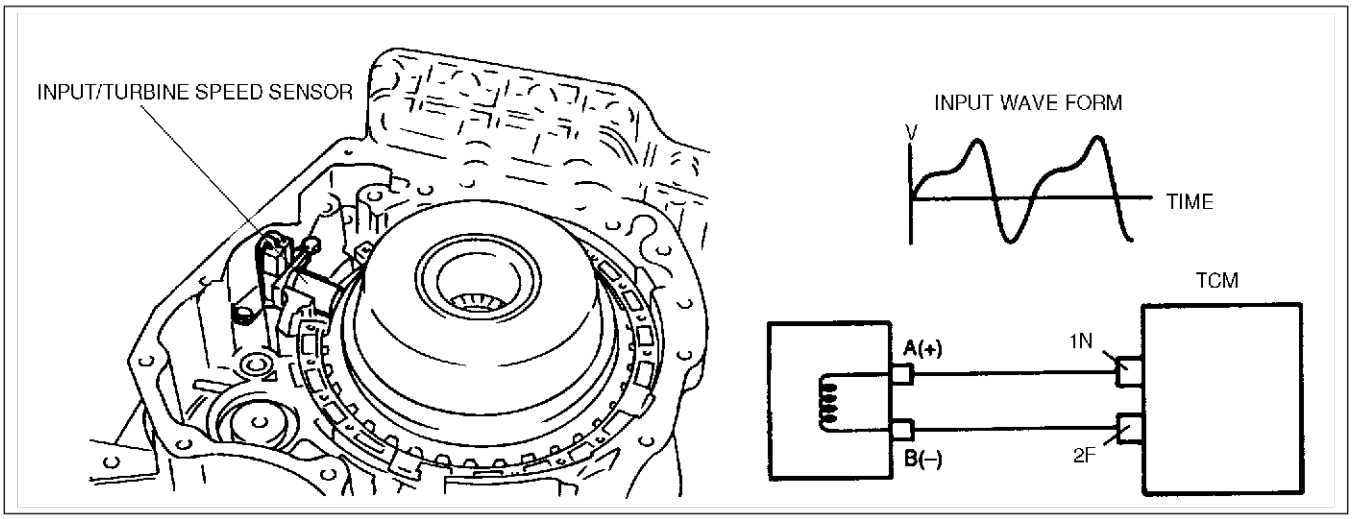

AMU0517S021

End Of Sie

INTERMEDIATE SENSOR DESCRIPTION

AME571419550W01

Function

- A intermediate sensor is located in the transaxle case and detects the rotating speed of the output gear.

Construction/Operation

- The magnetic pickup type of intermediate sensor is mounted in the transaxle case, next to the output gear. It generates a 54-pulse signal for each rotation of the output gear, and sends this signal to the TCM.

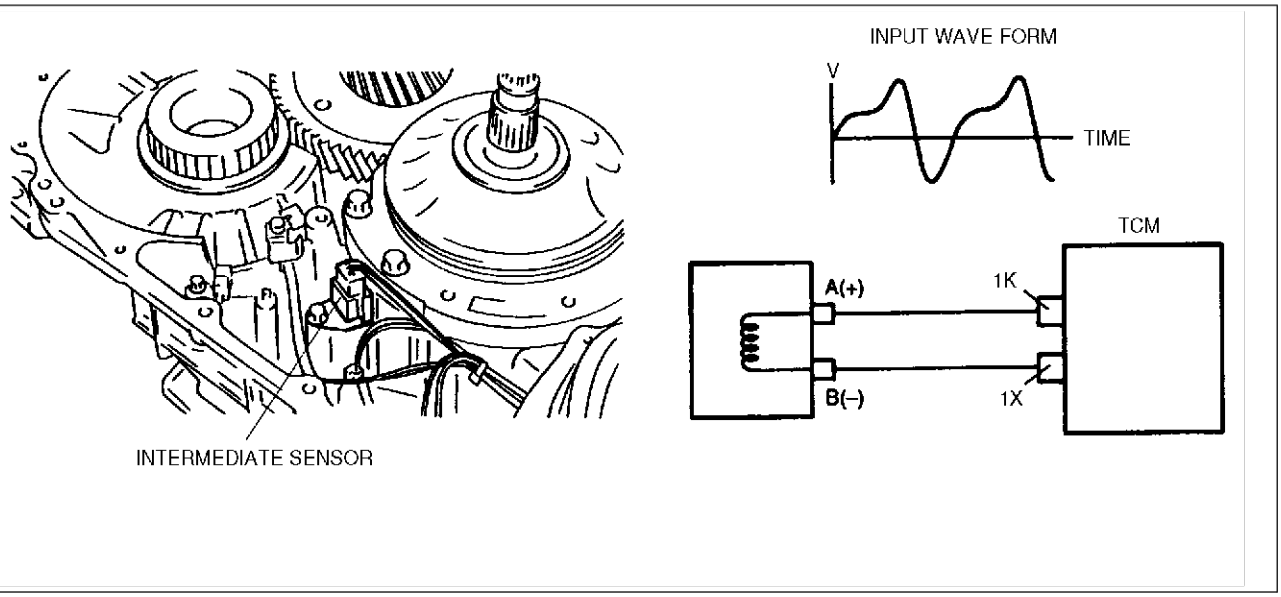

AMU0517S022

End Of Sie

VEHICLE SPEEDOMETER SENSOR DESCRIPTION

AME571417400W01

Function

- A vehicle speedometer sensor is located in the transaxle case and detects the rotating speed of the parking gear.

Construction/Operation

- The magnetic pickup type of vehicle speedometer sensor is mounted in the transaxle case, next to the parking gear. It generates a 18-pulse signal for each rotation of the parking gear, and sends this signal to the TCM.

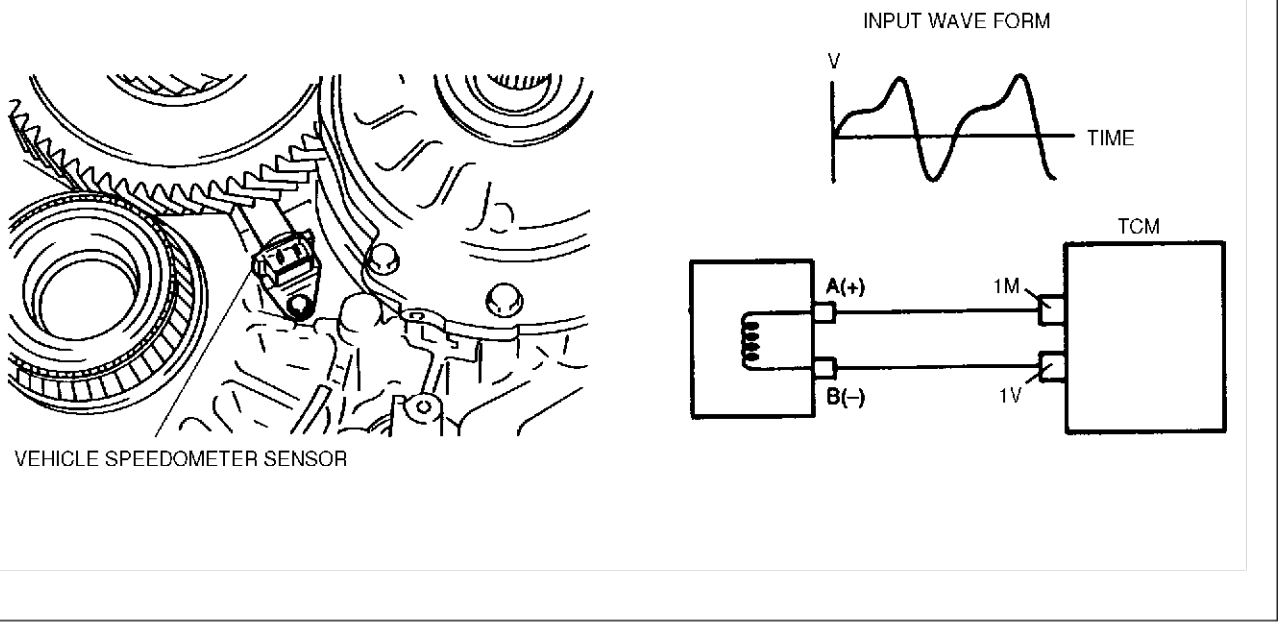

AMU0517S023

End Of Sie

SOLENOID VALVE DESCRIPTION

AME571421280W01

Function

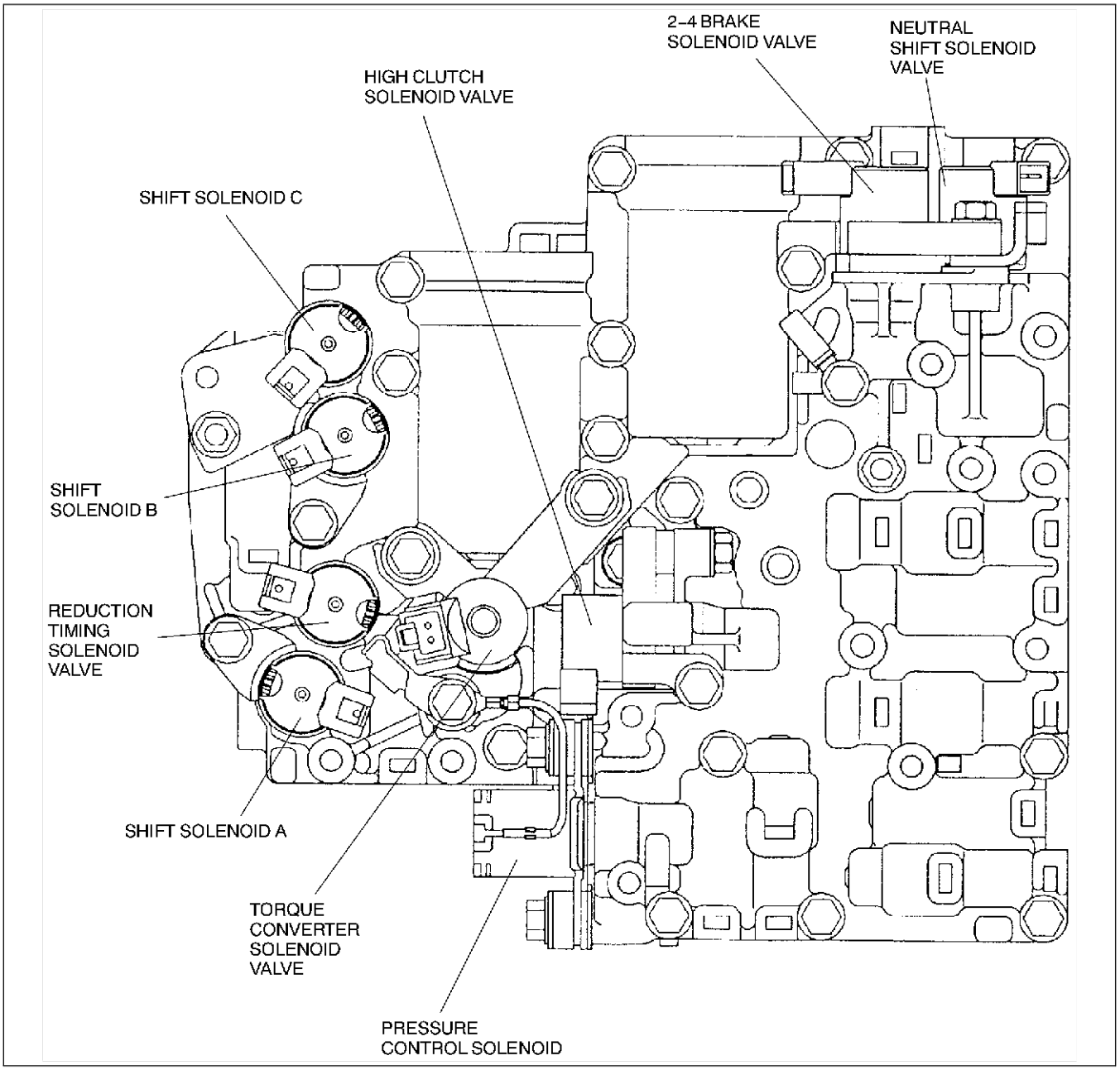

AMU0517S024

K2

Function chart

Solenoid	Type	Characteristics	Function
Pressure control solenoid	Repeats ON and OFF at 50 Hz (20 ms cycle); duty cycle type (three-way type)	Normal high	Controls pressure regulator valve, regulates line pressure
Torque converter clutch (TCC) solenoid valve		Normal low	Controls TCC engagement and disengagement
2-4 brake solenoid valve		Normal high	Control 2-4 brake engagement and disengagement
High clutch solenoid valve			Control high clutch engagement and disengagement
Shift solenoid A	ON/OFF (three-way type)	Normal low	Control shift valve A
Shift solenoid B			Control shift valve B
Shift solenoid C			Control shift valve C
Reduction timing solenoid valve	ON/OFF (two-way type)		Control reduction reducing valve
Neutral shift solenoid			Control neutral shift valve and reverse inhibitor valve

Construction/Operation
Duty type
Normal high

- De-energized (OFF) or duty 0%
  - — Because the output port (solenoid pressure) and supply port (pilot pressure) connect in the solenoid, the solenoid pressure supplied to the output port.
- Energized (ON) or duty 100%
  - — Because the output port (solenoid pressure) and the drain port connect, solenoid pressure is drained.

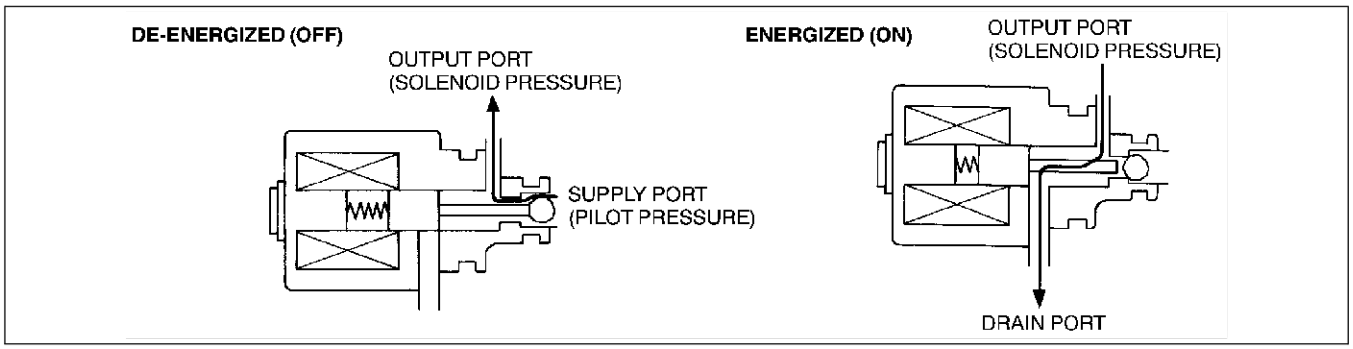

AMU0517S025

Normal low

- De-energized (OFF) or duty 0%
  - — Because the output port (solenoid pressure) and the drain port connect in the solenoid, the solenoid pressure is drained.
- Energized (ON) or duty 100%
  - — Because the output port (solenoid pressure) and the supply port (pilot pressure) connect in the solenoid, the solenoid pressure supplied to the output port.

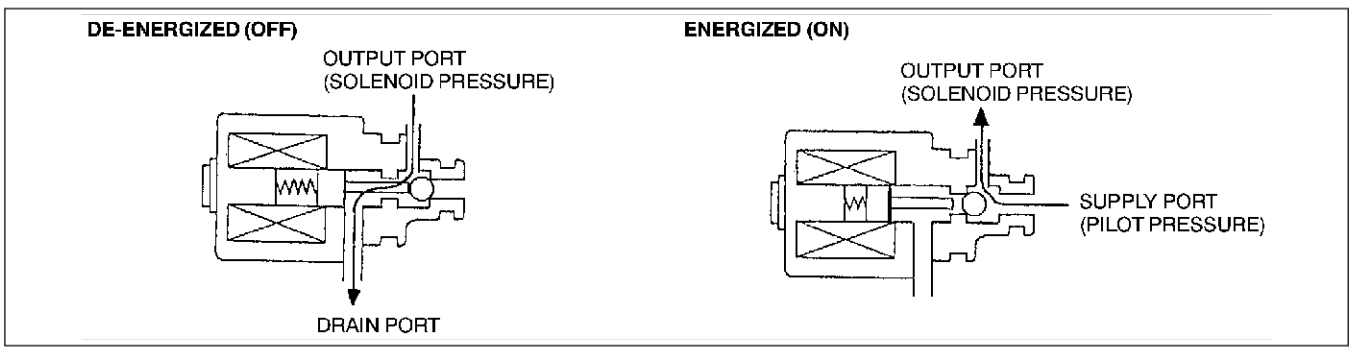

AMU0517S026

ON/OFF type (two-way)
Normal low
- De-energized (OFF)
  — The TCM does not apply an electric current to the solenoid valves. The rod moves upward by hydraulic pressure and the drain port opens.
- Energized (ON)
  — The TCM applies an electric current to the solenoid valves. This excites the coil and forces the rod to move downward to retain hydraulic pressure.

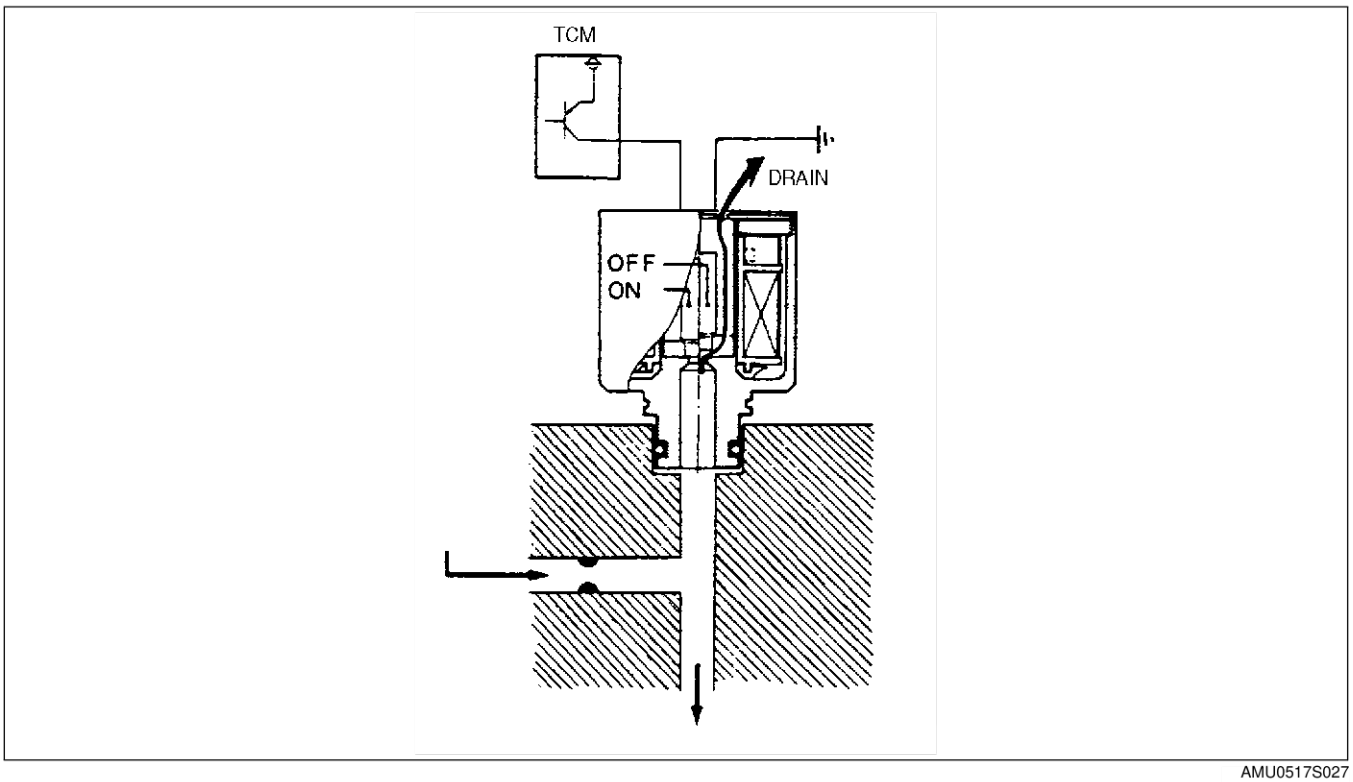

AMU0517S027

End Of Sta

CAR AREA NETWORK (CAN) DESCRIPTION

AME571418901W01

Outline
- CAN (Controller Area Network) transmits information between the TCM and the PCM via CAN.

Structure/Operation
- The PCM inputs throttle opening angle, engine speed, engine torque, engine coolant temperature. to the TCM.
- The TCM operates shift and TCC controls based on the throttle opening angle, and controls line pressure and other based on the throttle opening angle and the engine torque.
- The TCM outputs reduce torque signal, range signal, turbine speed, ATF temperature signal, and TCC signal to the PCM.
- If there is an open or short circuit in the CAN wiring, the system determines that the CAN is abnormal and switches to fail-safe mode.

Input
- Throttle position signal
- Engine torque signal (without torque down)
- Engine torque signal (with torque down)
- Engine torque signal (loss torque)
- Torque reduced signal
- Engine coolant temperature signal
- Engine speed signal
- Buttery OFF signal

Output
- Reduce torque signal
- Range signal
- Turbine speed signal
- ATF temperature signal
- TCC signal
- Racing select signal

- MIL indicate request signal

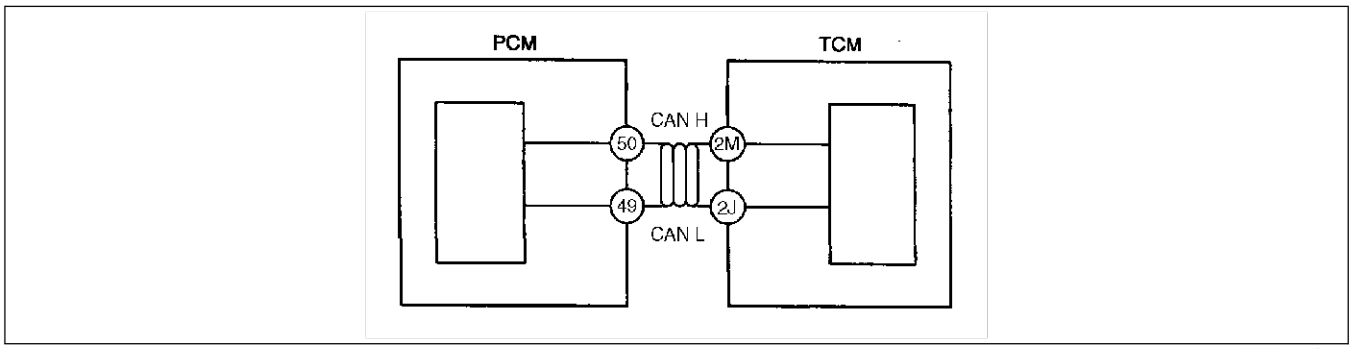

AMU0517S028

End Of Sie

TRANSAXLE CONTROL MODULE (TCM) DESCRIPTION

AME571418901W02

Outline

- The TCM controls the automatic transaxle operations. The TCM outputs a control signal to the transaxle according to the signal from other sensors and/or switches.
- In driving mode, there are three mode selections: NORMAL, high temp, and SLOPE. The TCM automatically selects the proper mode according to driving condition.

End Of Sie

SHIFT CONTROL DESCRIPTION

AME571418901W03

Outline

Features

- The TCM selects and determines the shift diagram based on the results of the range and driving mode judgements. Then, based on the shift diagram, the TCM sends the signal to the duty-cycle type solenoid valves and the ON/OFF type solenoid valves, according to the VSS signal and the throttle opening signal, to perform shifting.

Construction (system diagram)

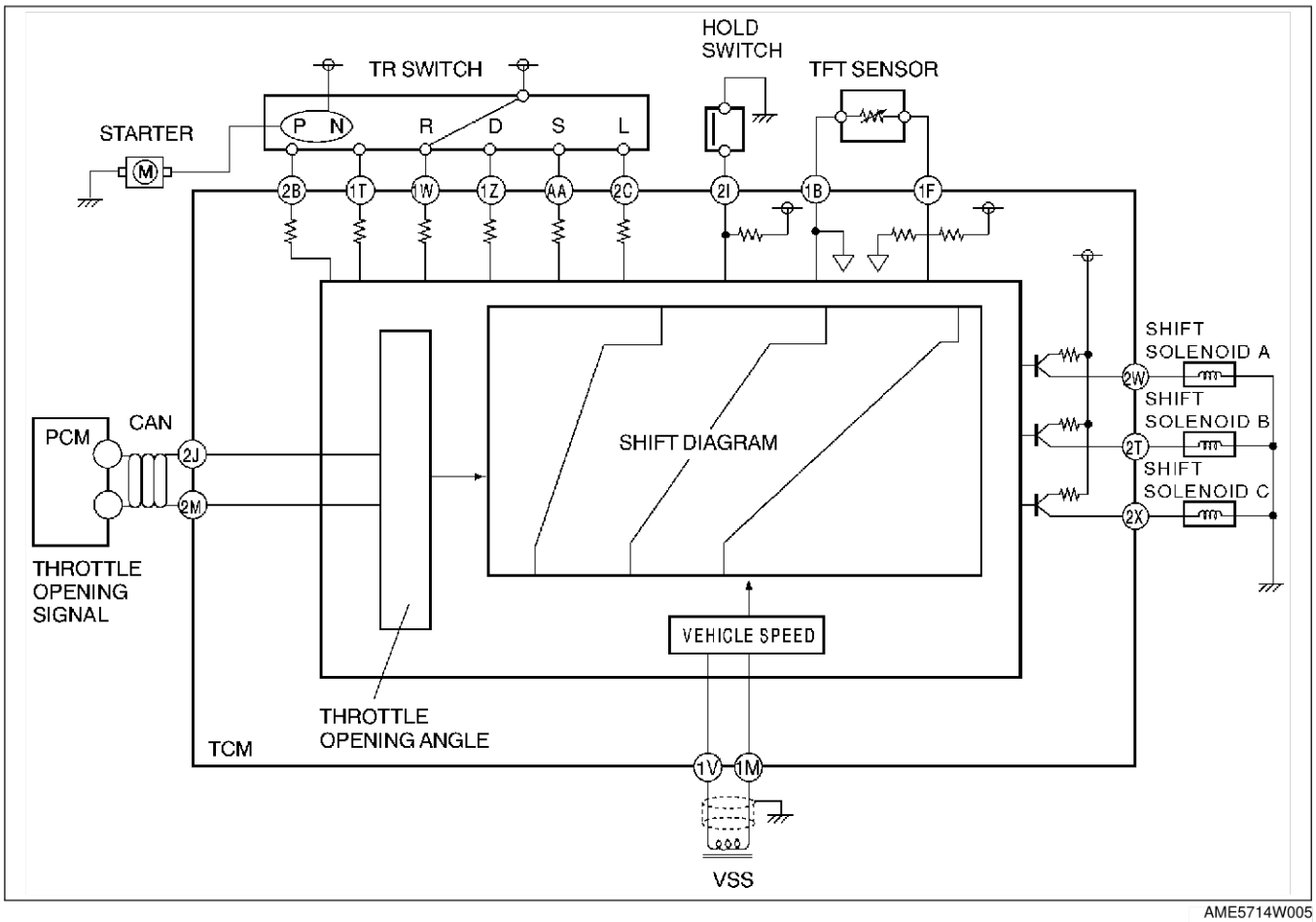

AME5714W005

Operation
Range determination

- Each range is determined by operating the selector lever, and switching ON/OFF the switch in the TR switch internal circuit. The present range is detected according to the ON/OFF signal of the switch.
- The following switches are built into the TR switch, and determine each range when the switch is on.
  P position switch
  R position switch
  N position switch
  D range switch
  S range switch
  L range switch

End Of Ste

DRIVE MODE DETERMINATION DESCRIPTION

AME571418901W04

D Range

- Driving modes (HOLD) can be selected by switching the HOLD switch ON or OFF.
- When the ATF temperature is high, each shift pattern switches automatically: when the ATF temperature is high, the TCC point is shifted to low speed side.

End Of Ste

LINE PRESSURE CONTROL DESCRIPTION

AME571418901W05

Outline

Features

- Line pressure is hydraulic pressure for operating friction elements such as the multiple disc clutches, multiple disc brakes, and the brake band.
- To adjust to optimal line pressure according to engine load conditions and vehicle driving conditions, continuous variable line pressure control from the pressure control solenoid is used.
- The line pressure control includes the basic control, line pressure control when shifting, backup control, and other.

Construction (System diagram)

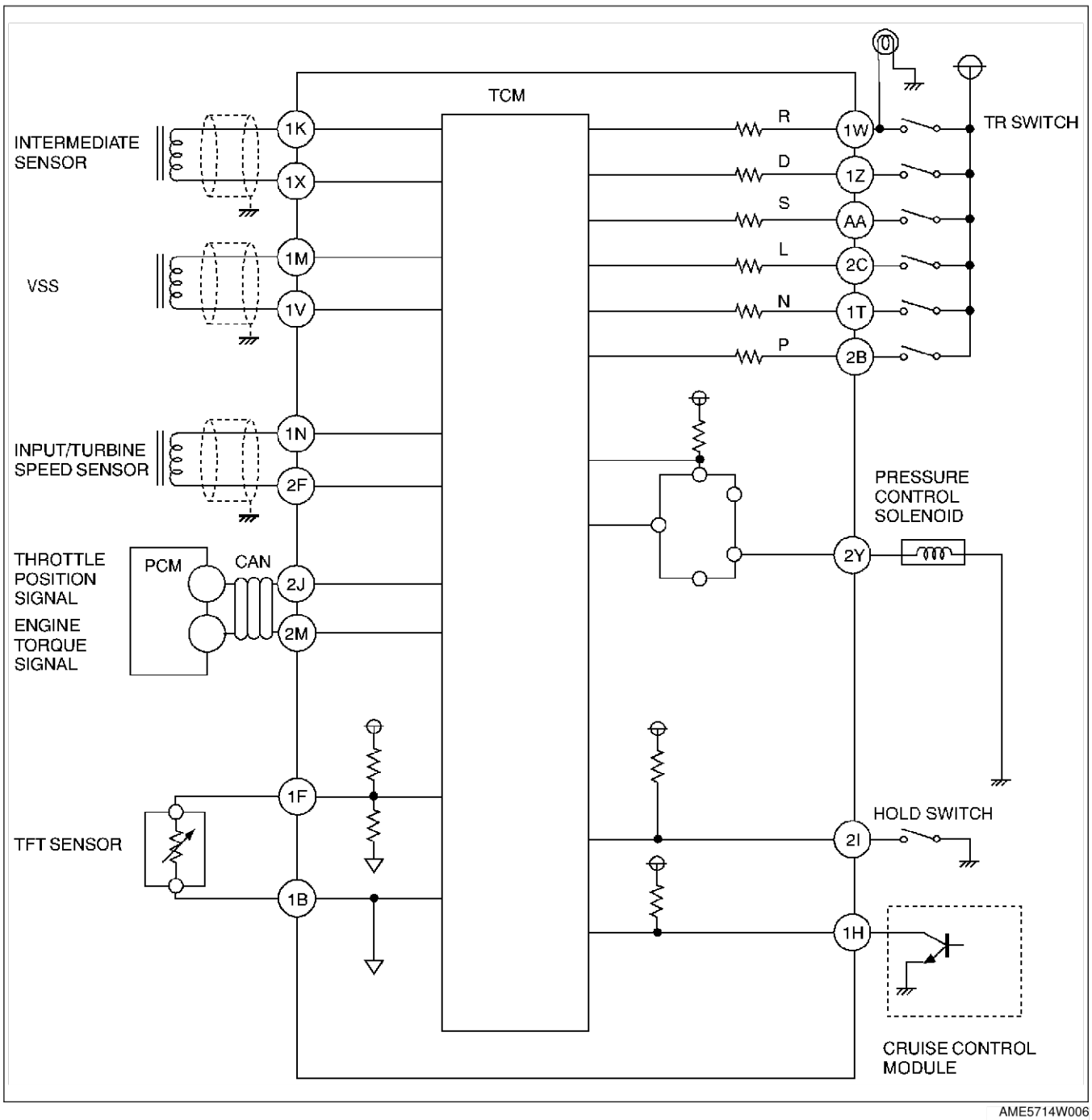

AME5714W006

Basic Line Pressure Control

- Control at vehicle-start or during normal driving. The pressure control solenoid is controlled so that the line pressure is optimal according to the throttle opening angle.
  The pressure characteristic is as shown in the graph at below. During normal driving (only in shift ranges for forward travel), the line pressure is set lower than that of at vehicle-start; this is called “cutback.”

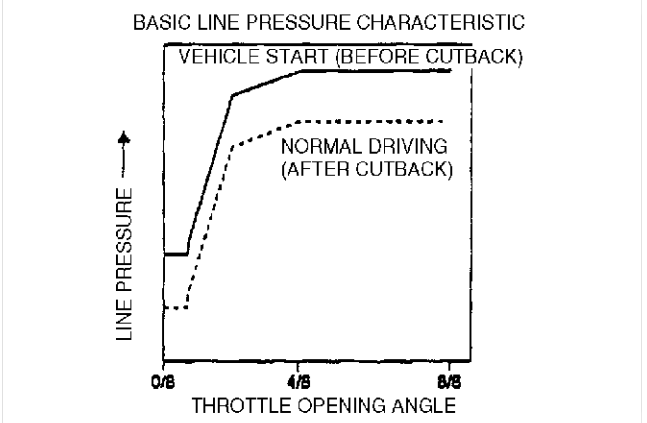

AMU0517S065

- Though the cutback control is selected in each driving pattern, it is not operated in the fail-safe mode. In the fail-safe mode, the pressure before the cutback is retained and so the pressure is higher than that during normal driving.

Line Pressure Control When Shifting

- Line pressure is controlled when shifting the transaxle to reduce shift shock. Line pressure is adjusted only during shifting so that it is optimal at each shifting according to the driving conditions. During the control, engine output torque is also reduced.

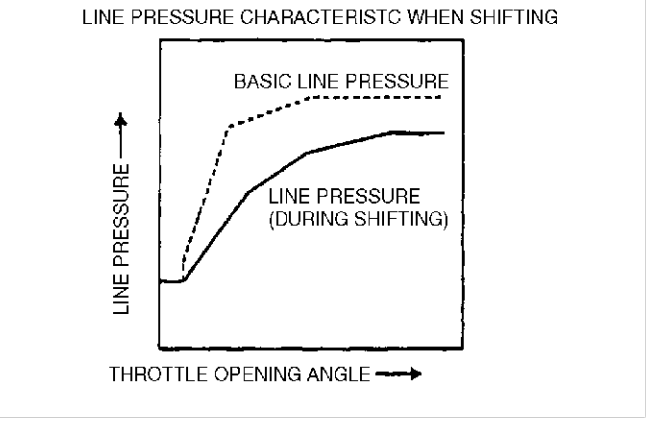

AMU0517S032

Backup Control

- When shifting down to employ engine braking during high-speed driving, line pressure is gradually increased, thus increasing clutch capacity.
  The backup control is operated regardless of the driving range when the engine brake is operated in 1GR or when shifting down to 2GR-4GR.

Line Pressure Control at Extremely Low Temperatures

- When the ATF temperature is approximately –30 °C {–22 °F} or below, the period when the pressure control solenoid is ON (duty ratio) is set at 3 % to maintain line pressure at maximum regardless of the throttle opening angle. Thus delay in clutch or brake operation due to high viscosity of ATF is prevented when the ATF temperature is extremely low.

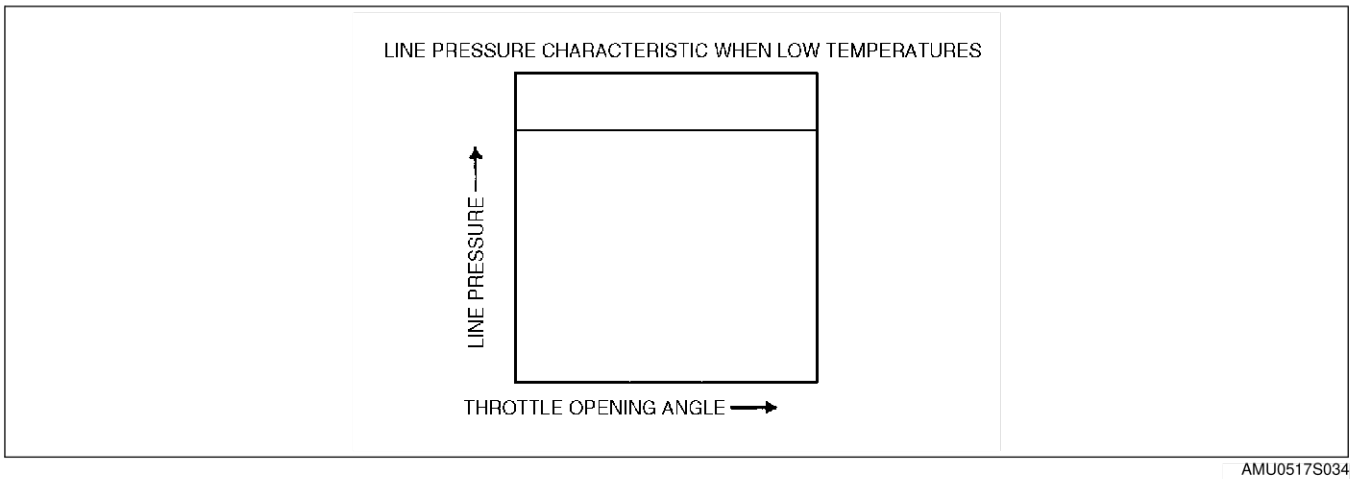

AMU0517S034

Pressure Control Solenoid Stop Control

- When the vehicle is stopped at ATF temperatures approximately –30 °C {–86 °F} or below and the accelerator pedal is released, the operation (duty ratio) of the pressure control solenoid is set at 3 %, regardless of the driving range. Due to this, AT noise is reduced when the vehicle is stopped at extremely low ATF temperatures.

End Of Sta

FEEDBACK CONTROL DESCRIPTION

AME571418901W06

Outline

Features

- During shift up with the accelerator pedal depressed, feedback control regulates the clutch pressure on the engagement and release sides, according to the throttle opening angle and vehicle speed. It also uses past gearshifts to optimize clutch pressure.

Note

- If the battery terminal is disconnected, feedback memory in the TCM will be erased, and thus gearshift shock may increase. The shock, however, will decrease gradually as the vehicle is driven.

Construction (system diagram)

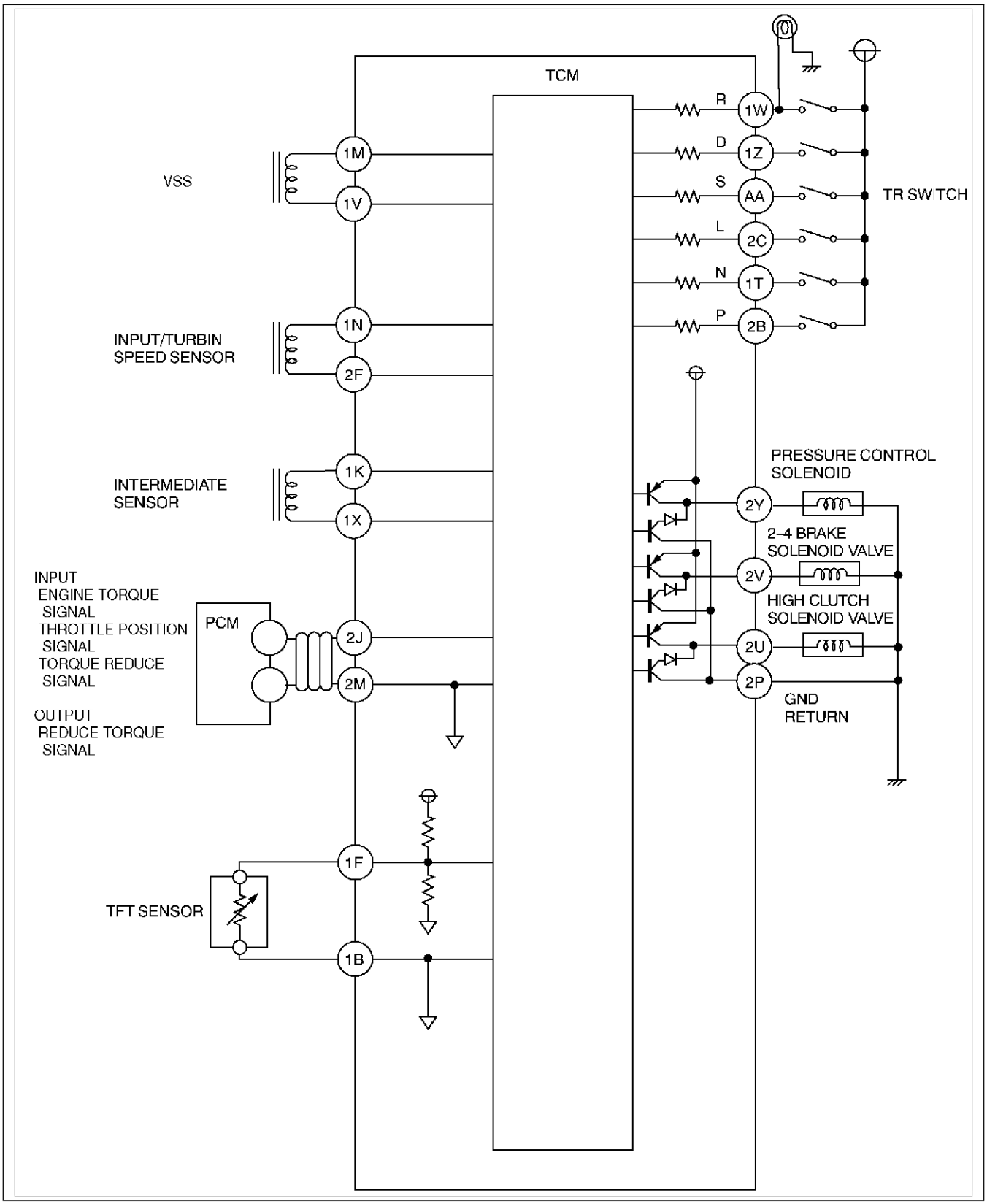

AME5714W007

Operation

Upshift clutch engagement pressure feedback

- Clutch pressure (2) is learned so that gear shift time (1) becomes a predetermined target value, and thus changes in performance and changes in the transaxle over time are minimized based on past gear shift results.

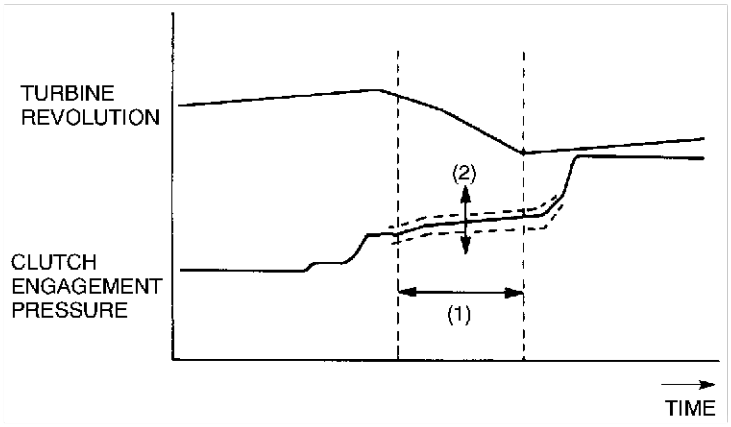

AMU0517S038

Upshift timing feedback (release-side clutch pressure)

- Clutch pressure release timing on the release side (2) is learned so that the change in engine speed (1) is optimized, and thus clutch pressures on the engagement and release sides are optimized.

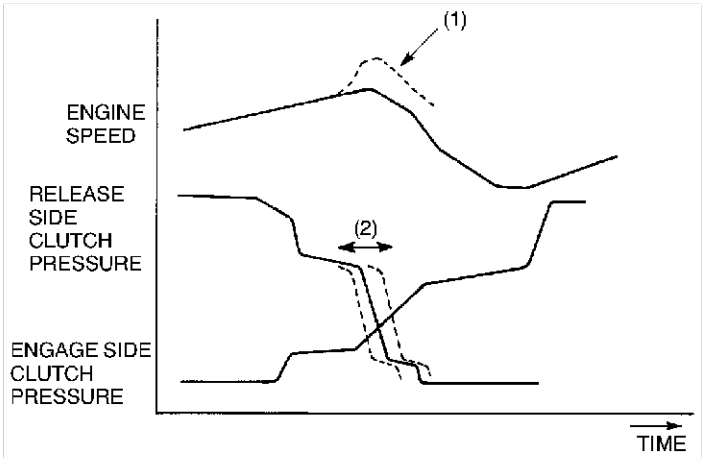

AMU0517S039

End Of Sie

N-D SELECT CONTROL DESCRIPTION

AME571418901W07

- When the selector lever is switched from the P or N position to the driving ranges, or vice versa, the engine speed change is minimized by regulating fuel injection volume in order to improve select feel.
- Range signals are output to the PCM in the following instances:
  When the selector lever is switched from the P or N position to the driving ranges, or vice versa, and the specified time has elapsed.
- The PCM regulates fuel injection volume based on inhibitor signals prevent change in engine speed.

End Of Sie

TORQUE CONVERTER CLUTCH (TCC) CONTROL DESCRIPTION

AME571418901W08

Outline

Features

- The TCM selects the TCC schedule according to the gear selected by the transaxle. 50 Hz (20 ms cycle) on/off signals are relayed from the TCC schedule and speed sensor and throttle opening angle to the duty cycle TCC solenoid valve to control TCC.

Construction (system diagram)

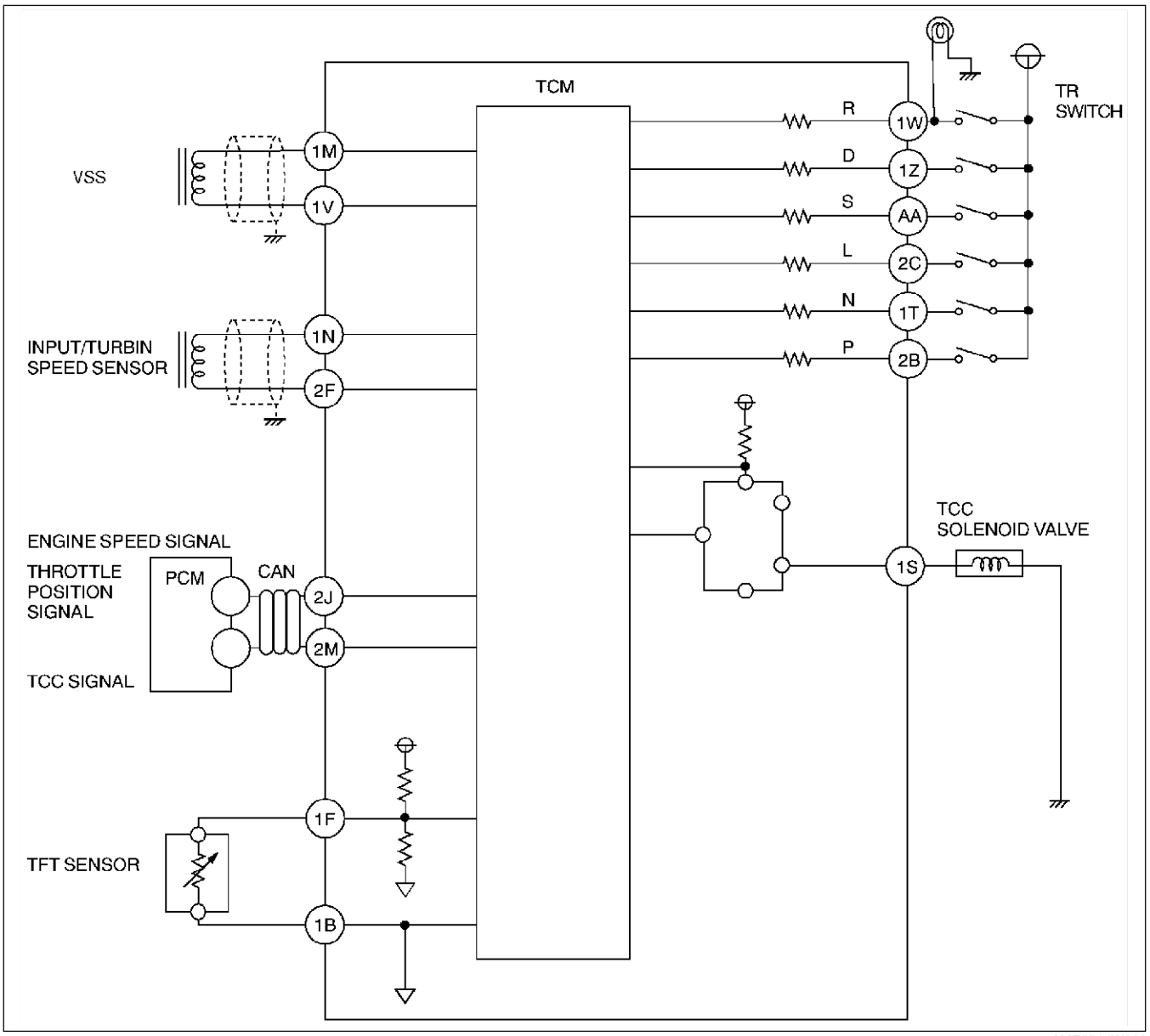

AME5714W008

Operation

Torque converter clutch (TCC) release operation

- The TCM sends an OFF signal to TCC solenoid valve to release the TCC. In this condition, the TCC control valve is pushed to the up side by spring force and line pressure, and torque converter pressure acts on the torque converter front chamber, releasing the TCC from the converter cover.

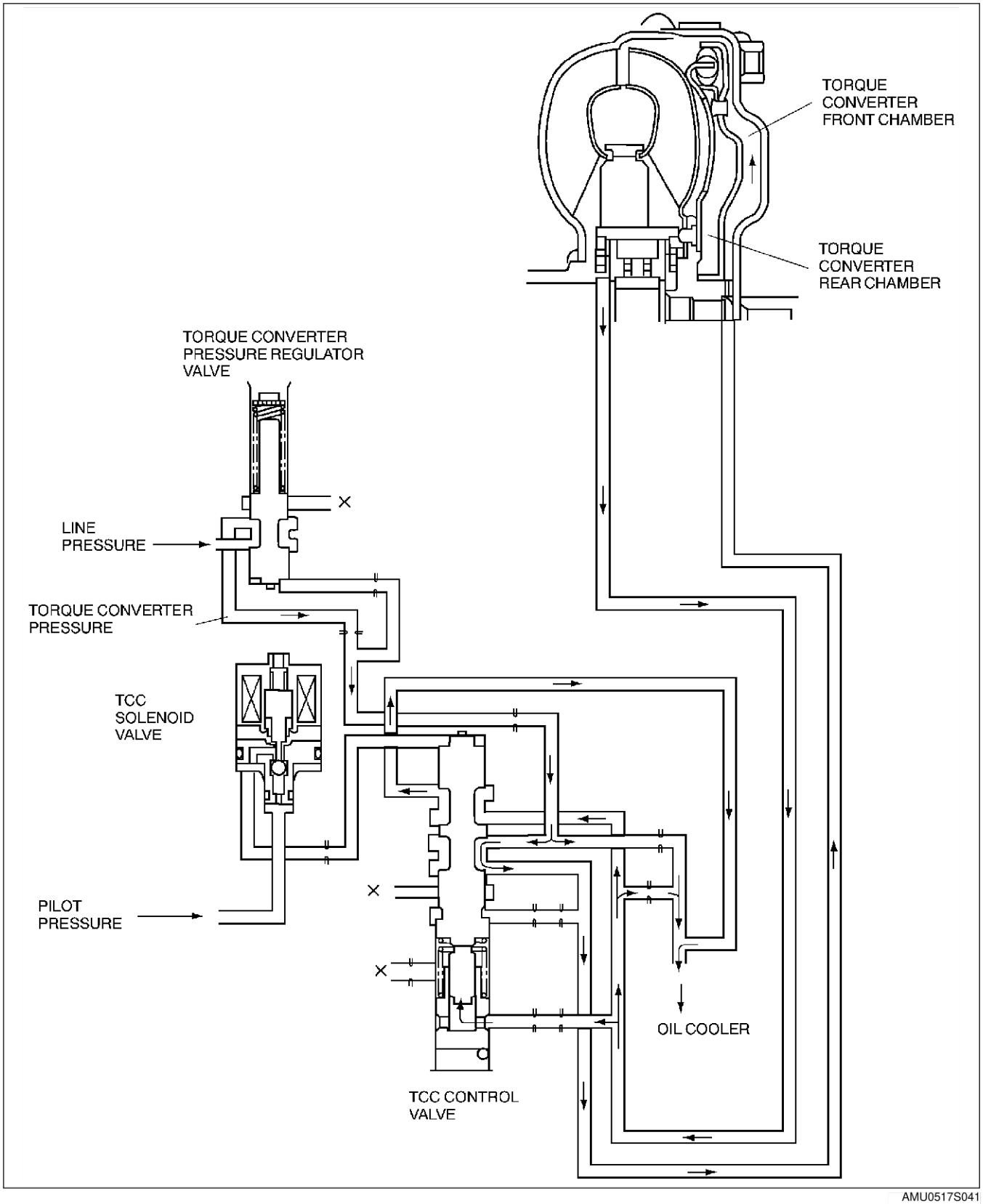

Torque converter clutch (TCC) engaging operation

- The TCM determines smooth TCC operation. It sends an ON signal to the TCC solenoid valve to push the TCC control valve to the down side. Consequently, the hydraulic pressure applied to the torque converter front chamber is drained through the TCC control valve, engaging torque converter clutch.

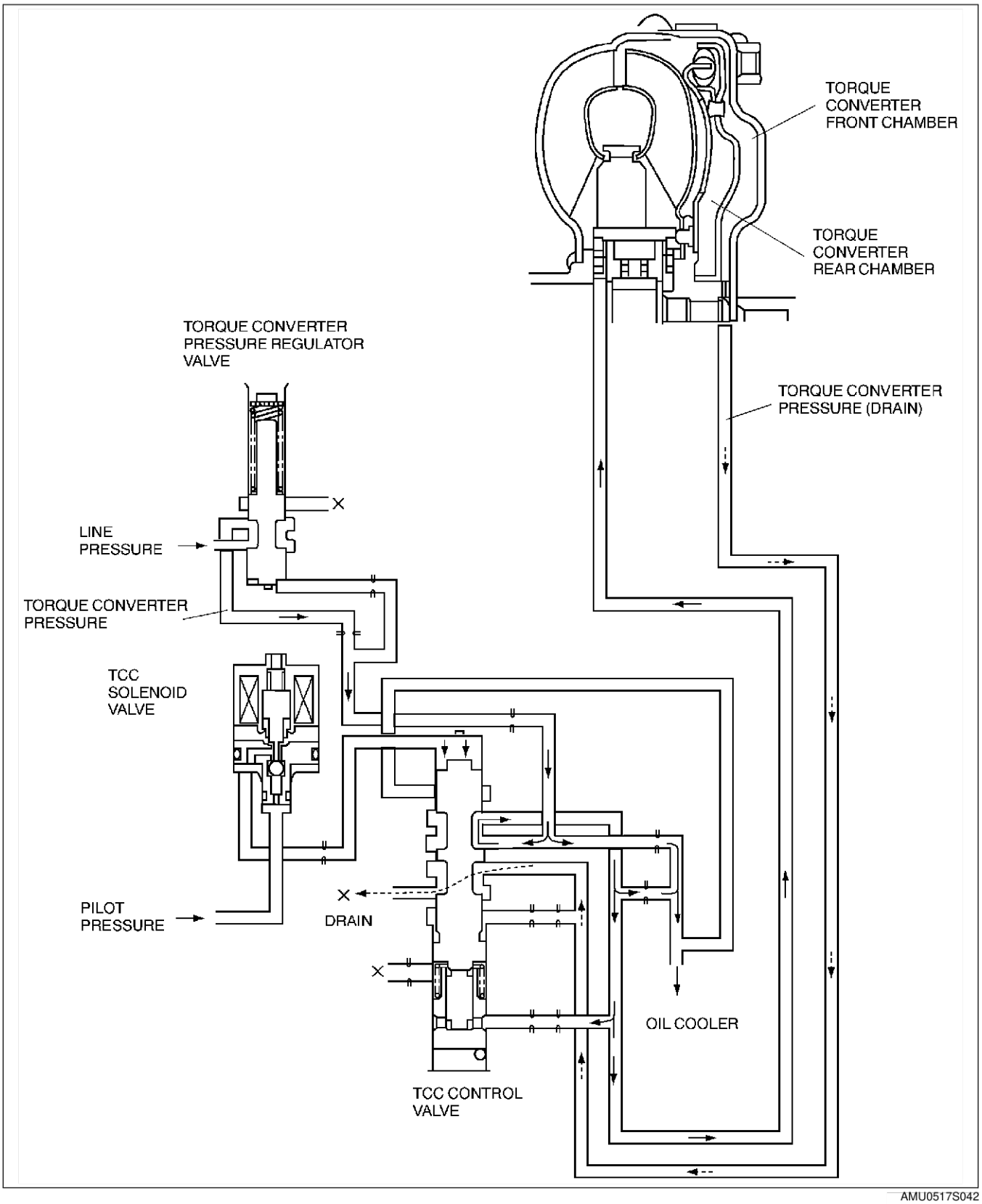

Coast TCC

- Even when the accelerator pedal is released in the TCC range at high speeds, the TCC remains engaged to prevent repetition of TCC engagement/release by depressing/releasing the accelerator pedal, as well as reducing shock during the operation.

Determination of Torque Converter Clutch (TCC) Cancellation

The TCC control is canceled when any of the following condition are met:

- Engine coolant temperature is low.
- ATF temperature is low.
- Brake switch is on (when depressing the brake pedal).
- Accelerator depressing speed and accelerator opening angle are above the set value.
- Engine speed signal is below the set value.
- Failure is in the TCC control system detected by diagnosis function.

End Of Sta

SLOPE MODE CONTROL DESCRIPTION

AME571418901W09

- Climbing and the appropriate gear is determined by engine load and the vehicle acceleration.

Slope Mode Control Block Diagram

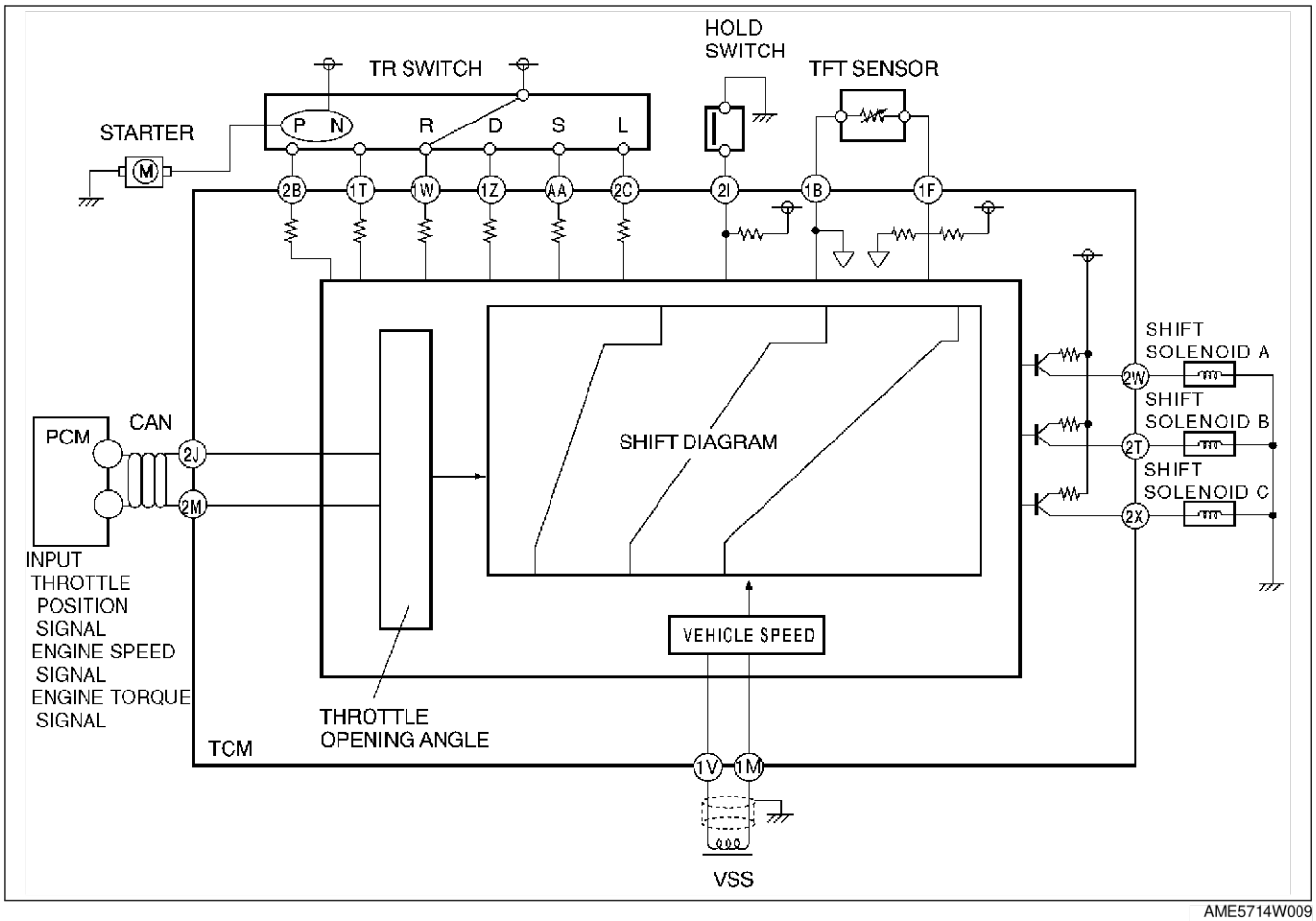

AME5714W009

When climbing hill

- When the hill is steeper than a certain grade, unnecessary up shift is prevented by holding an appropriate gear.

End Of Sta

ON-BOARD DIAGNOSTIC (OBD) SYSTEM DESCRIPTION

AME571418901W10

- The OBD system has the following functions:
  - — Failure detection function: detects failure of the input/output devices and system components of the ATX.
  - — Memory function: stores the DTC when a failure is detected.
  - — Fail-safe function: fixes the output device function and input value of the sensors/switches to ensure minimum vehicle drivability when a failure is detected.
  - — PID data monitoring function: monitors the input/output signal and calculated value of the TCM and sends the monitoring data to the scan tool.

Block Diagram

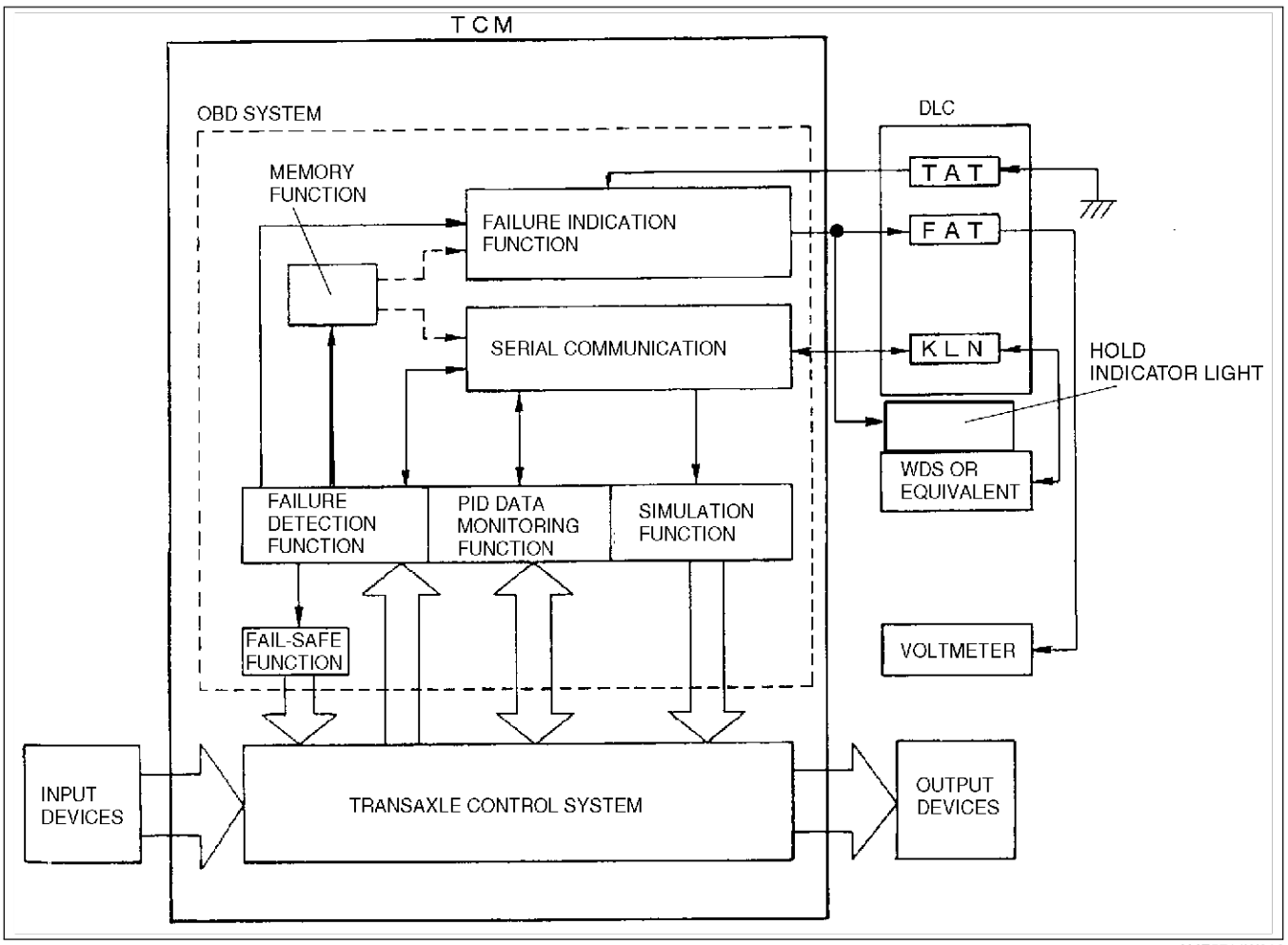

AME5714W016

K2

DTC Comparison Lists

- The following codes are divided to improve serviceability.

Part Name	DTC	New MPV	Previous MPV
		Definition	Definition
Transaxle range switch	P0705	Circuit malfunction (power short)	Circuit malfunction (short)
	P0706	Circuit malfunction (open/ground short)	Circuit malfunction (open)
Transaxle fluid temperature sensor	P0710	N/A	Circuit malfunction (open/short)
	P0711	Malfunction (stuck) : for Israeli specs. N/A : except for Israeli specs.	Malfunction (stuck)
	P0712	Circuit malfunction (short)	N/A
	P0713	Circuit malfunction (open)	N/A
Input/turbine speed sensor	P0715	Circuit malfunction (open/short)	Circuit malfunction (open/short)
Vehicle speedometer sensor	P0720	Circuit malfunction (open/short)	N/A
Incorrect 1GR ratio	P0731	N/A	Incorrect 1GR ratio
Incorrect 2GR ratio	P0732	N/A	Incorrect 2GR ratio
Incorrect 3GR ratio	P0733	N/A	Incorrect 3GR ratio
Incorrect 4GR ratio	P0734	N/A	Incorrect 4GR ratio
Torque converter	P0740	Circuit malfunction : for Israeli specs. N/A : except for Israeli specs.	Circuit malfunction
TCC control solenoid valve	P0743	Circuit malfunction (open/short)	Circuit malfunction (open/short)
Pressure control solenoid	P0745	N/A	Circuit malfunction (open/short)
	P0748	Circuit malfunction (open/short)	N/A
Shift solenoid A	P0750	N/A	Circuit malfunction (open/short)
	P0751	Malfunction (stuck off) : for Israeli specs. N/A : except for Israeli specs.	N/A
	P0752	Malfunction (stuck on) : for Israeli specs. N/A : except for Israeli specs.	N/A
	P0753	Circuit malfunction (open/short)	N/A
Shift solenoid B	P0755	N/A	Circuit malfunction (open/short)
	P0756	Malfunction (stuck off) : for Israeli specs. N/A : except for Israeli specs.	N/A
	P0757	Malfunction (stuck on) : for Israeli specs. N/A : except for Israeli specs.	N/A
	P0758	Circuit malfunction (open/short)	N/A
Shift solenoid C	P0760	N/A	Circuit malfunction (open/short)
	P0761	Malfunction (stuck off) : for Israeli specs. N/A : except for Israeli specs.	N/A
	P0762	Malfunction (stuck on) : for Israeli specs. N/A : except for Israeli specs.	N/A
	P0763	Circuit malfunction (open/short)	N/A
Reduction timing solenoid valve	P0768	Circuit malfunction (open/short)	N/A
Neutral shift solenoid valve	P0773	Circuit malfunction (open/short)	N/A
2-4 brake solenoid valve	P0778	Circuit malfunction (open/short)	N/A
Intermediate sensor	P0791	Circuit malfunction (open/short)	N/A
High clutch solenoid valve	P0798	Circuit malfunction (open/short)	N/A
GND return	P1710	Circuit malfunction (open)	N/A
3-2 timing solenoid valve	P1765	N/A	Circuit malfunction (open/short)
VSS	P0500	N/A	Circuit malfunction (open/short)
CAN	U0073	CAN BUS OFF	N/A
CAN	U0100	TCM cannot receive any signals from PCM	N/A

Failure Detection Function

- The failure detection function detects failures in the input/output signal system (when the IG switch is on or while driving).
- When a failure is detected, the DTCs in the DTC chart are outputted to FAT terminal in the DLC through the failure indication function. At the same time, the failure detection results are sent to the fail-safe function and the memory function.
- If a failure is detected, the HOLD indicator light flashes or illuminates to warn the driver of a malfunction in the powertrain system components or sensor/switches. (Also, MIL will be illuminated except for DTC P0748)

Memory Function

- The memory function stores the signal systems that are determined as failures by the failure detection function. The memory is not erased even if the IG switch is turned off (LOCK position) or the detected failures are recovered.
- To clear the stored failure information, disconnect the negative battery cable.

Failure Indication Function

- The signal system which has been judged to be abnormal by the failure detection function is sent to the HOLDF indicator light and DLC (FAT terminal) as a DTC.

When using voltmeter

- The DTC can be checked by fluctuation of the voltmeter needle.
- Each DTC consists of four digits. These numbers are indicated by four separate indication of two-digit number, a combination of “1” and each number of the code.

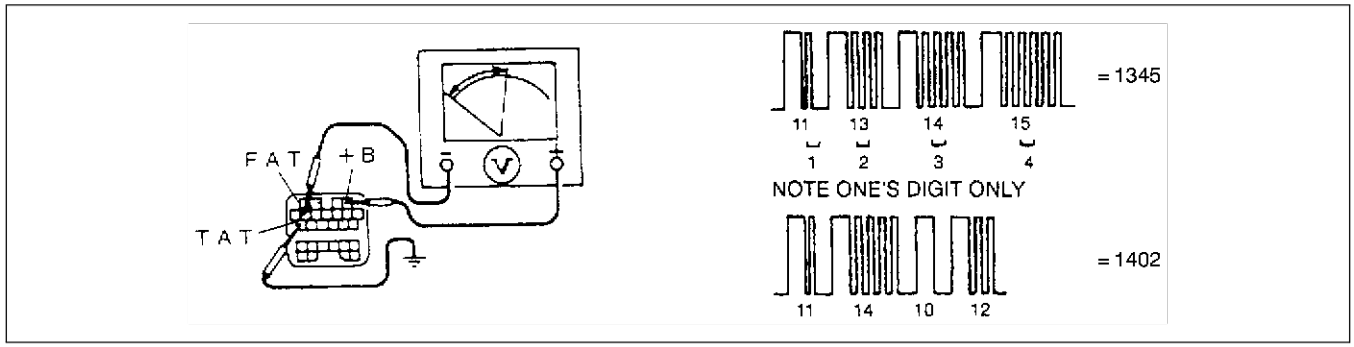

AMU0517S045

When using HOLD indicator light

- When the TAT terminal is shorted after the IG switch is turned on, the HOLD indicator light indicates the DTCs.
- Each DTC consists of four digits. These numbers are indicated by four separate indication of two-digit number, a combination of “1” and each number of the code.

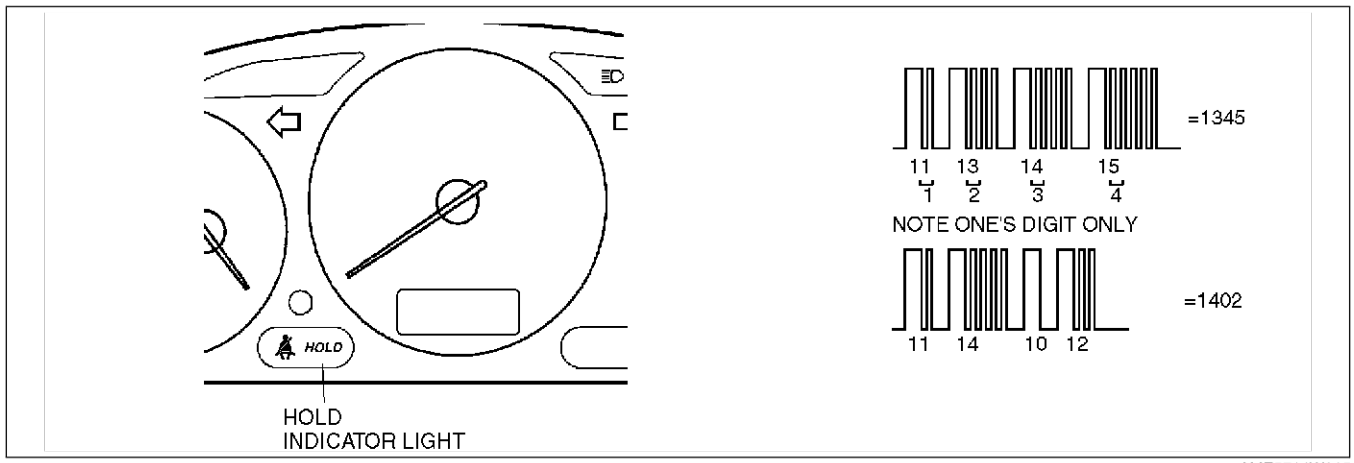

AME5714W015

K2

DTC Table

DTC No.	On-board diagnostic function	MIL	HOLD indicator light flash	DC	Monitor item	Memory function
P0705	TR switch circuit malfunction (power short circuit)	ON	YES	2	CCM	X
P0706	TR switch circuit malfunction (open/ground short circuit)	ON	YES	2	CCM	X
P0711*	TFT sensor malfunction (stuck)	ON	NO	2	CCM	X
P0712	TFT sensor circuit malfunction (short circuit)	ON	YES	2	CCM	X
P0713	TFT sensor circuit malfunction (open circuit)	ON	YES	2	CCM	X
P0715	Input/turbine speed sensor circuit malfunction	ON	YES	2	CCM	X
P0720	Vehicle speedometer sensor circuit malfunction	ON	YES	2	CCM	X
P0740*	TCC system	ON	NO	2	CCM	X
P0743	TCC solenoid valve malfunction (open/short)	ON	YES	1	CCM	X
P0748	Pressure control solenoid malfunction (open/short)	OFF	YES	–	CCM	X
P0751*	Shift solenoid A malfunction (stuck off)	ON	NO	2	CCM	X
P0752*	Shift solenoid A malfunction (stuck on)	ON	NO	2	CCM	X
P0753	Shift solenoid A malfunction (open/short)	ON	YES	1	CCM	X
P0756*	Shift solenoid B malfunction (stuck off)	ON	NO	2	CCM	X
P0757*	Shift solenoid B malfunction (stuck on)	ON	NO	2	CCM	X
P0758	Shift solenoid B malfunction (open/short)	ON	YES	1	CCM	X
P0761*	Shift solenoid C malfunction (stuck off)	ON	NO	2	CCM	X
P0762*	Shift solenoid C malfunction (stuck on)	ON	NO	2	CCM	X
P0763	Shift solenoid C malfunction (open/short)	ON	YES	1	CCM	X
P0768	Reduction timing solenoid malfunction (open/short)	OFF	YES	–	CCM	X
P0773	Neutral shift solenoid malfunction (open/short)	OFF	YES	–	CCM	X
P0778	2-4 brake solenoid malfunction (open/short)	OFF	YES	–	CCM	X
P0791	Intermediate sensor malfunction (open/short)	ON	YES	2	CCM	X
P0798	High clutch solenoid malfunction (open/short)	OFF	YES	–	CCM	X
P1710	GND return malfunction	OFF	NO	–	Other	X
U0073	CAN BUS OFF	ON	YES	1	CCM	X
U0100	TCM cannot receive any signals from PCM	ON	YES	1	CCM	X

X : Available
* : Israeli specs.

Fail-safe Function

- In the fail-safe function, minimum vehicle drivability is obtained by changing the signals that are determined as malfunctions by the failure detection function to the preset values, and limiting the TCM control.

DTC No.	On-board diagnostic function	Detection condition	Fail-safe	TCC	HOLD mode selection
P0705	Transaxle range (TR) switch circuit malfunction (power short circuit)	• Two or more range signals are inputted from TR switch for 5 seconds or more	• TR switch priority D > N > P > R > S > L • Inhibits feedback control, SLOPE mode, torque reduction control	Available	Available
P0706	Transaxle range (TR) switch circuit malfunction (open/ ground short circuit)	• No range signal is inputted from TR switch for 100 seconds or more	• Inhibits feedback control, SLOPE mode, torque reduction control	Available	Available
P0711*	Transaxle fluid temperature (TFT) sensor malfunction (stuck)	• TFT sensor signal stays outside normal temperature range for 10 minute or more	—	Available	Available

DTC No.	On-board diagnostic function	Detection condition	Fail-safe	TCC	HOLD mode selection
P0712	Transaxle fluid temperature (TFT) sensor circuit malfunction (short circuit)	• Signals form TFT sensor are 155 °C {311 °F} or greater for 10 min.	• Inhibits feedback control • Engine coolant temperature signal are used for shifting.	Available	Available
P0713	Transaxle fluid temperature (TFT) sensor circuit malfunction (open circuit)	• Vehicle speed is 20 km/h {12.4 mph} or greater, and signals from TFT sensor are –30 °C {–22 °F} or less for 150 seconds or more		Available	Available
P0715	Input/turbine speed sensor circuit malfunction	• Input/turbine speed sensor is 600 rpm or less while engine speed is 1500 rpm or greater and vehicle speed is 40 km/h {24.8 mph} or greater in D, S, or L ranges.	• Inhibits shift control	Available	Available
P0720	Vehicle speedometer sensor circuit malfunction	• Vehicle speedometer sensor is 150 rpm or less while intermediate sensor 1400 rpm or greater in D, S, or L range for 2 second or more.	• Inhibits SLOPE mode, feedback control, torque reduction control	Available	Available
P0740*	Torque converter clutch (TCC) system	• RPM difference between crankshaft (engine speed signal) and reverse clutch drum (input/turbine speed sensor signal) exceeds the pre-programmed value	—	Available	Available
P0743	Torque converter clutch (TCC) solenoid valve malfunction (open/short)	• Open or short in torque converter clutch solenoid valve circuit (Voltage different from on/off signal relayed by CPU in TCM is detected while TCM is monitoring solenoid output voltage.)	• Stops driving of TCC solenoid valve (OFF)	Inhibition	Available
P0748	Pressure control solenoid malfunction (open/short)	• Open or short in pressure control solenoid circuit (Voltage different from on/off signal relayed by CPU in TCM is detected while TCM is monitoring solenoid output voltage.)	• Stops driving of pressure control solenoid, 2-4 brake solenoid valve, and high clutch solenoid valve (OFF) • Inhibit feedback control.	Available	Available
P0751*	Shift solenoid A malfunction (stuck off)	• Difference between actual gear ratio and gear ratio set in TCM is large	—	Available	Available
P0752*	Shift solenoid A malfunction (stuck on)	• Difference between actual gear ratio and gear ratio set in TCM is large	—	Available	Available
P0753	Shift solenoid A malfunction (open/short)	• Open or short in shift solenoid A circuit (Voltage different from on/off signal relayed by CPU in TCM is detected while TCM is monitoring solenoid output voltage.)	• Stops driving all ON/OFF type solenoids (OFF) and TCC solenoid valve (OFF)	Inhibition	Inhibition

DTC No.	On-board diagnostic function	Detection condition	Fail-safe	TCC	HOLD mode selection
P0756*	Shift solenoid B malfunction (stuck off)	• Difference between actual gear ratio and gear ratio set in TCM is large	—	Available	Available
P0757*	Shift solenoid B malfunction (stuck on)	• Difference between actual gear ratio and gear ratio set in TCM is large	—	Available	Available
P0758	Shift solenoid B malfunction (open/short)	• Open or short in shift solenoid B circuit (Voltage different from on/off signal relayed by CPU in TCM is detected while TCM is monitoring solenoid output voltage.)	• Stops driving all ON/OFF type solenoids (OFF) and TCC solenoid valve (OFF)	Inhibition	Inhibition
P0761*	Shift solenoid C malfunction (stuck off)	• Difference between actual gear ratio and gear ratio set in TCM is large	—	Available	Available
P0762*	Shift solenoid C malfunction (stuck on)	• Difference between actual gear ratio and gear ratio set in TCM is large	—	Available	Available
P0763	Shift solenoid C malfunction (open/short)	• Open or short in shift solenoid C circuit (Voltage different from on/off signal relayed by CPU in TCM is detected while TCM is monitoring solenoid output voltage.)	• Stops driving all ON/OFF type solenoids (OFF) and TCC solenoid valve (OFF)	Inhibition	Inhibition
P0768	Reduction timing solenoid valve malfunction (open/short)	• Open or short in reduction timing solenoid valve circuit (Voltage different from on/off signal relayed by CPU in TCM is detected while TCM is monitoring solenoid output voltage.)	• Stops driving of reduction timing solenoid valve (OFF)	Available	Available
P0773	Neutral shift solenoid valve malfunction (open/short)	• Open or short in neutral shift solenoid valve circuit (Voltage different from on/off signal relayed by CPU in TCM is detected while TCM is monitoring solenoid output voltage.)	• Stops driving of neutral shift solenoid valve (OFF)	Available	Available
P0778	2-4 brake solenoid valve malfunction (open/short)	• Open or short in 2-4 brake solenoid valve circuit (Voltage different from on/off signal relayed by CPU in TCM is detected while TCM is monitoring solenoid output voltage.)	• Stops driving of pressure control solenoid, 2-4 brake solenoid valve, and high clutch solenoid valve (OFF) • Inhibit feedback control.	Available	Available
P0791	Intermediate sensor malfunction (open/short)	• Rotation speed of output gear (intermediate sensor) is low when vehicle speed and engine speed exceed the pre programmed value	• Inhibit feedback control • Inhibits torque reduction control	Available	Available

DTC No.	On-board diagnostic function	Detection condition	Fail-safe	TCC	HOLD mode selection
P0798	High clutch solenoid valve malfunction (open/short)	• Open or short in high clutch solenoid valve circuit (Voltage different from on/off signal relayed by CPU in TCM is detected while TCM is monitoring solenoid output voltage.)	• Stops driving of pressure control solenoid, 2-4 brake solenoid valve, and high clutch solenoid valve (OFF) • Inhibit feedback control.	Available	Available
P1710	GND return malfunction	• TCM detects open in GND return signal of solenoid.	—	Available	Available
U0073	CAN BUS OFF	• CAN controller damaged.	• Throttle valve opening angle is fixed (4/8) at the time in order to determine shift • Maximizes line pressure	Inhibition	Available
U0100	TCM cannot receive any signals from PCM	• TCM cannot receive any signals from PCM			

* : Israeli specs.

Parameter Identification (PID) Access
Monitor item table

Display on the tester	Definition	Unit/ Condition	TCM terminal
2-4 B Duty	2-4 brake solenoid valve control signal in TCM	ON/OFF	2V
BOO	Brake switch	ON/OFF	1U
PNP	TR switch (P/N position switch)	ON/OFF	–
FAT	FAT terminal (DLC in engine compartment)	ON/OFF	1Q
GEAR	Calculated gear range in TCM	1ST/2ND/ 3RD/4TH/5TH	–
H/C Duty	High clutch solenoid valve control signal in TCM	%	2U
LPS	Pressure control solenoid control signal in TCM	%	2Y
NSFT TIM	Neutral shift solenoid valve control signal in TCM	ON/OFF	2D
OSS	Intermediate sensor	rpm	1K, 1X
RDCN TIM	Reduction timing solenoid valve control signal in TCM	ON/OFF	2G
RPM	Engine speed	rpm	–
SSA/SS1	Shift solenoid A control signal in TCM	ON/OFF	–
SSB/SS2	Shift solenoid B control signal in TCM	ON/OFF	–
SSC/SS3	Shift solenoid C control signal in TCM	ON/OFF	–
TAT	TAT terminal (DLC in engine compartment)	ON/OFF	–
TCCC	TCC solenoid valve control signal in TCM	%	2S
TCIL	HOLD indicator light control signal in TCM	ON/OFF	1E
TCS	HOLD switch	ON/OFF	2I
TFT	ATF temperature	°C	1B, 1F
TFTV	ATF temperature signal voltage	V	1B, 1F
THOP	Throttle position	%	–
TRD	Tr switch (D range switch)	ON/OFF	1Z
TRL	TR switch (L range switch)	ON/OFF	2C
TRR	TR switch (R position switch)	ON/OFF	1W
TRS	TR switch (S range switch)	ON/OFF	1AA
TSS	Input/turbine speed sensor	rpm	1N, 2F
VPWR	Battery voltage	V	1P
VSS	Vehicle speed	km/h	1V, 1M

End Of Sta

COOLING SYSTEM DESCRIPTION

AME571419900W01

Outline

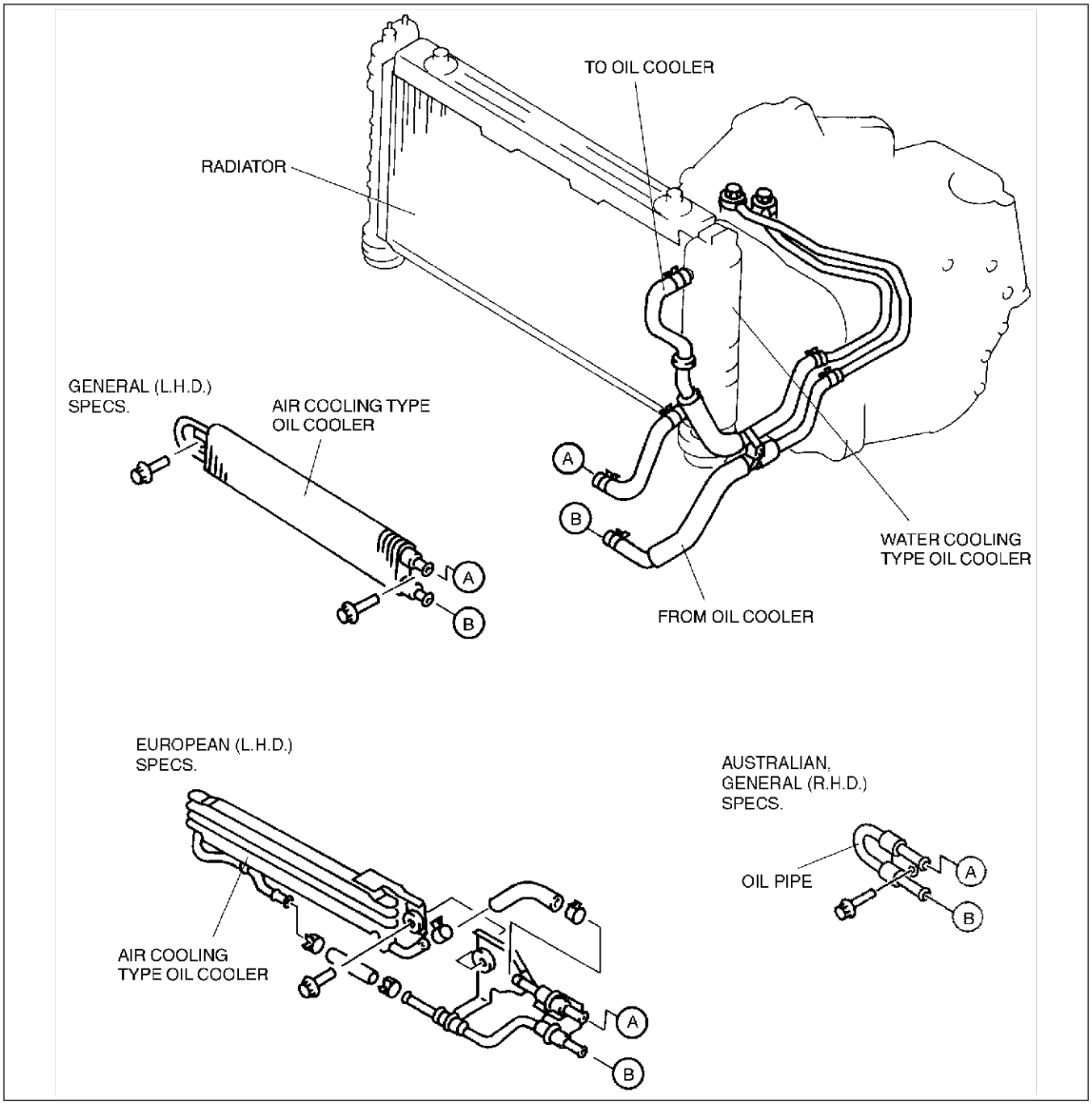

AME5714W017

End Of Sie

AUTOMATIC TRANSAXLE

MECHANICAL SYSTEM TEST

AME571401030W09

Mechanical System Test Preparation

1. Apply the parking brake and use wheel chocks at the front and rear of the wheels.
2. Inspect the engine coolant. (See E–10 ENGINE COOLANT LEVEL INSPECTION.)
3. Inspect the engine oil. (See Section D.)
4. Inspect the ATF levels. (See K2–74 Automatic Transaxle Fluid (ATF) Level Inspection.)
5. Inspect the idle speed and ignition timing in P position. (See Section F.)

Line Pressure Test

Note

- Line pressure cannot be measured on the JA5A-EL automatic transaxle. Measure the low clutch pressure in place of D, S, and L range line pressures. Measure the reverse clutch pressure in place of R position line pressure.

1. Engine idling.
   (1) Perform mechanical system test preparation. (See K2–67 Mechanical System Test Preparation.)

Warning

- **Removing the plug when the ATF is hot can be dangerous. Hot ATF can come out of the opening and badly burn you. Before removing the square-head plug, allow the ATF to cool.**

(2) Remove the plug and O-ring shown in the figure.

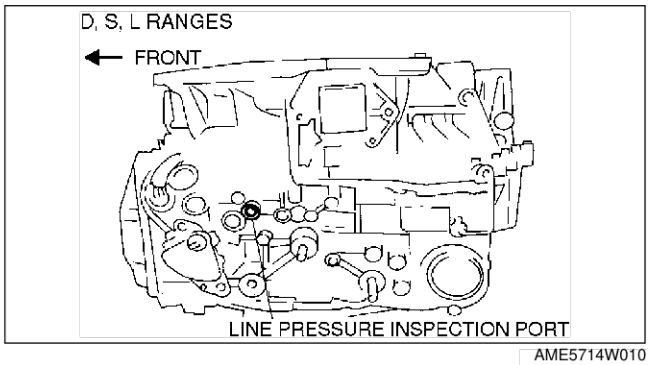

AME5714W010

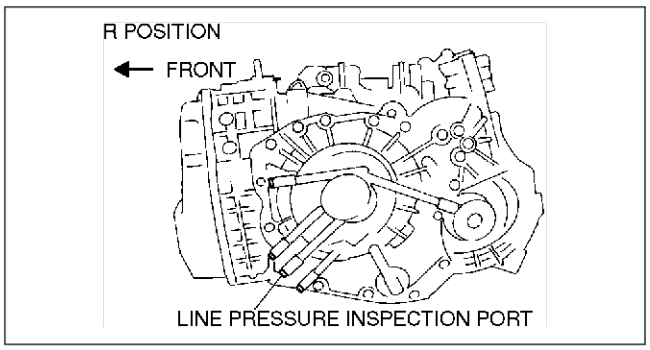

AMU0517W003

K2

(3) Connect the **SSTs** (49 L019 014, 49 B019 901B, and 49 0378 400C) to the low clutch pressure inspection port (D, S, and L range line pressures) or reverse clutch pressure inspection port (R position line pressure).
(4) Start the engine and warm it up until the ATF reaches 60—70 °C {140—158 °F}.
(5) Shift the selector lever to D range.
(6) Read the line pressure at idle for the remaining ranges in the same manner.
- S range
- L range
- R range

ATF temperature
60—70 °C {140—158 °F}
Turn off all electrical loads

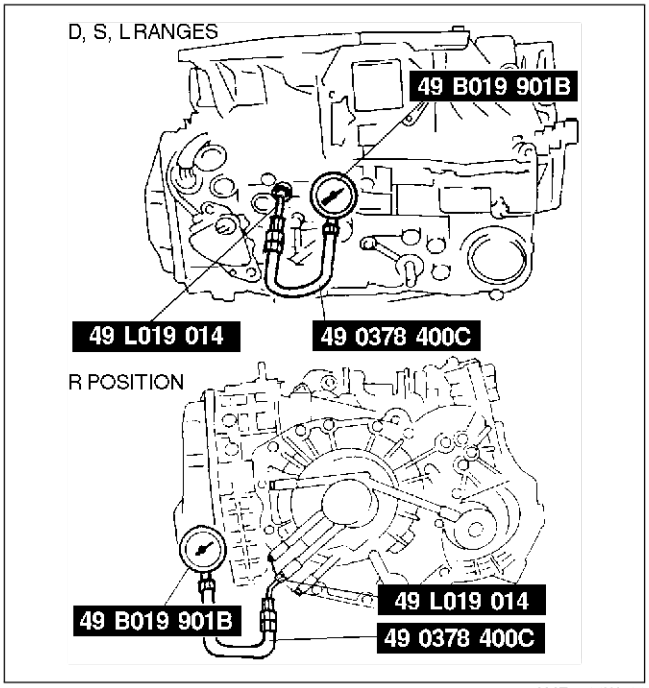

AME5714W011

Position/ Range	Line pressure (kPa {kgf/cm^2, psi})
	Idle
D, S	290—490 {3.0—5.0, 42—71}
L, R	550—750 {5.6—7.6, 80—109}

(7) Turn the engine off.

2. Engine stall speed.

Caution
- **Perform the line pressure test at engine idling prior to performing the test at engine stall. If line pressure is low at idle, do not perform the test at engine stall or further transaxle damage will occur.**

(1) Replace the **SST** (49 B019 901B) with the gauge of the **SST** (49 0378 400C).
(2) Start the engine.

Caution
- **Do not maintain WOT in any gear range for more than 5 seconds or transaxle damage will occur.**

(3) Firmly depress the brake pedal with the left foot, and then gradually depress the accelerator pedal to the floor (WOT) with the right.
(4) When the engine speed no longer increases, quickly read the line pressure and release the accelerator pedal.
(5) Shift the selector lever to N position and let the engine idle for 1 minute or more to cool the ATF.
(6) Read the line pressure at the engine stall speed for the remaining ranges in the same manner.
- S range
- L range
- R range

ATF temperature
60—70 °C {140—158 °F}
Turn off all electrical loads

Position/ Range	Line pressure (kPa {kgf/cm^2, psi})
	Stall
D, S	1,280—1,480 {13.1—15.1, 186—215}
L, R	1,550—1,750 {15.8—17.8, 225—254}

(7) Shift the selector lever to P position.
(8) Turn off the engine.
(9) Remove the **SSTs** and install a new square head plug and O-ring in the line pressure inspection port.

Tightening torque
4.91—9.80 N·m {50—100 kgf·cm, 43.4—86.7 in·lbf}

Evaluation of line pressure test

Condition			Possible cause
Idle	Below specification	Low pressure in all ranges	Worn oil pump Poor operation of each solenoid Fluid leaking from oil strainer, oil pump, pressure regulator valve, torque converter relief valve, and/or pressure relief valve Pressure regulator valve or pilot valve sticking Damaged pressure regulator valve spring or pilot valve spring
		Low pressure in D range only	Fluid leaking from hydraulic circuit of low clutch
		Low pressure in S and L ranges only	Fluid leaking from hydraulic circuit of low clutch and 2-4 brake
		Low pressure in R position only	Fluid leaking from hydraulic circuit of reverse clutch Fluid leaking from hydraulic circuit of low and reverse brake clutch
	Above specification	High pressure in all ranges	Throttle position sensor out of adjustment TFT sensor malfunction Poor operation of shift solenoid Pilot valve sticking Pressure reducing valve or plug sticking
Stall	Below specification	Low pressure in all ranges	Throttle position sensor out of adjustment Pressure control solenoid malfunction Poor operation of shift solenoid Pilot valve sticking Pressure reducing valve or plug sticking

Stall Speed Test

Caution
- **Perform the line pressure test at engine idling prior to performing the test at engine stall. If line pressure is low at idle do not perform the test at engine stall or further transaxle damage will occur.**

1. Perform mechanical system test preparation. (See K2–67 Mechanical System Test Preparation.)
2. Connect a tachometer.
3. Start the engine.
4. Shift the selector lever to D range.

Caution
- **Do not maintain WOT in any gear range for more than 5 seconds or transaxle damage will occur.**
- **If engine speed recorded by the tachometer exceeds maximum specified rpm, release the accelerator pedal immediately. Clutch or band slippage is indicator.**

5. Firmly depress the brake pedal with the left foot, and gently depress the accelerator pedal to the floor (WOT) with the right.
6. When the engine speed no longer increases, quickly read the engine speed and release the accelerator pedal.
7. Shift the selector the to N position and let the engine idle for 1 minute or more to cool the ATF.
8. Perform stall tests for the remaining ranges and position in the same manner.
   - R position
   - S range
   - L range

Engine stall speed
ATF temperature : 60—70 °C {140—158 °F}
Turn off all electrical loads
2,100—2,500 rpm

9. Turn off the engine.

Evaluation of stall test

Condition		Possible cause
Above specification	In all forward ranges and R position	Insufficient line pressure Worm oil pump Poor operation of low clutch Poor adjustment or malfunction of TR switch Oil leaking from oil pump, control valve, and/or transmission case Pressure regulator valve or pilot valve sticking
	In all forward ranges	Low clutch slippage Low one-way clutch slippage Reduction one-way clutch slippage
	In R position	Low and reverse brake slippage Reverse clutch slippage Reduction brake slippage
Below specification	In all forward ranges and R position	Engine out of tune One-way clutch slippage within torque converter

Time Lag Test

1. Perform mechanical system test preparation. (See K2–67 Mechanical System Test Preparation.)
2. Start the engine.
3. Warm up the engine until the ATF temperature reaches **60—70°C {140—158°}**. Shift the selector lever from N position to D range.
4. Use a stopwatch to measure the time it takes from shifting until engagement is felt. Take three measurements for each test and average the results using the following formula.

   Formula
   Average time lag = (Time 1 + Time 2 + Time 3) / 3

5. Perform the test for the following shifts in the same manner.
   - N position → P position

   Time lag
   N → D range ... approx. 0.5—1.0 second
   N → R position ... approx. 0.6— 1.1 second

Evaluation of time lag test

Condition		Possible Cause
Above specification	N → D shift	Insufficient line pressure in all forward ranges Low clutch slippage Low one-way clutch slippage Reduction one-way clutch slippage
	N → R shift	Insufficient line pressure in R position Low and reverse brake slippage Reverse clutch slippage Reduction brake slippage

End Of Sie

ROAD TEST

AME571401030W10

Road Test Preparation

1. Inspect the engine coolant. (See E–10 ENGINE COOLANT LEVEL INSPECTION.)
2. Inspect the engine oil. (See D–16 ENGINE OIL INSPECTION.)
3. Inspect the ATF levels. (See K2–74 AUTOMATIC TRANSAXLE FLUID (ATF) INSPECTION.)
4. Inspect the idle speed and ignition timing in P position. (See F4–58 IGNITION TIMING INSPECTION, F4–58 IDLE SPEED INSPECTION)
5. Bring up the engine and transaxle to normal operating temperature.

Typical Shift Diagram

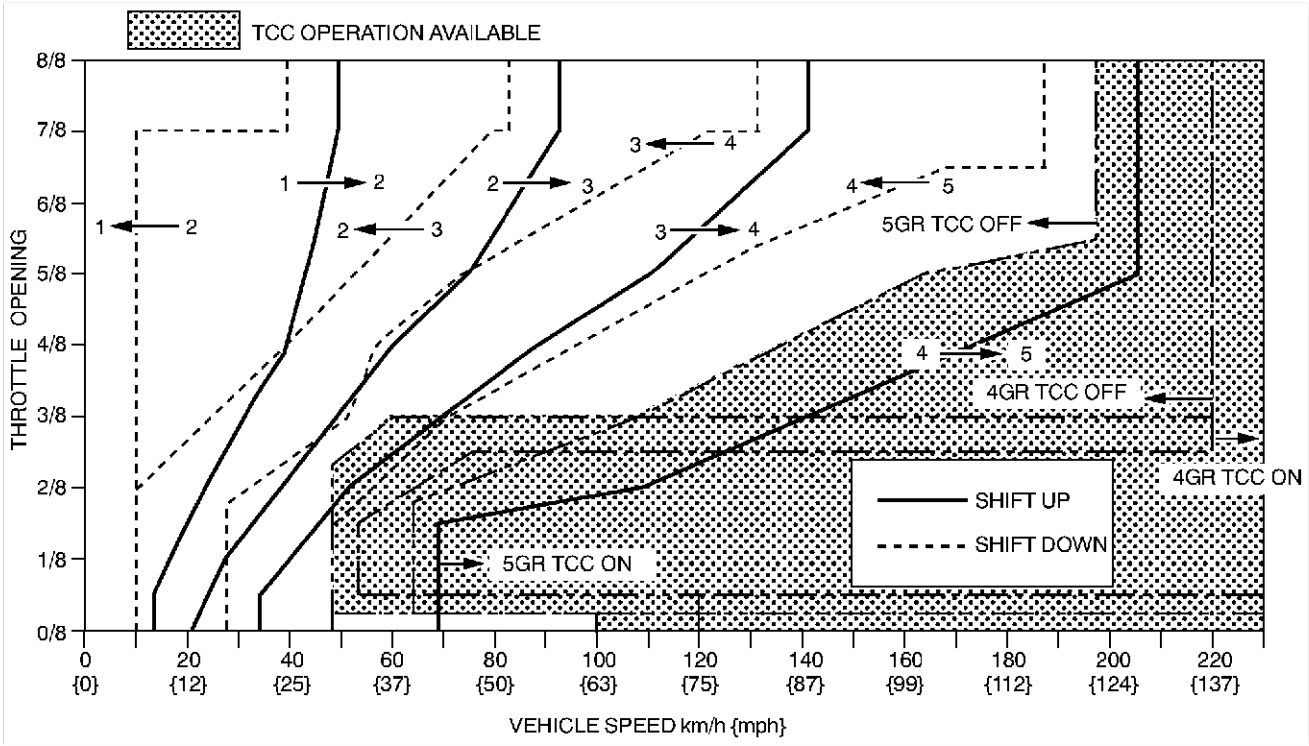

AMU0517W010

Shift Schedule Test

Note

- The NORMAL mode and SLOPE mode are automatically selected by the TCM in D range. The TCM shifts to SLOPE mode when the upgrade is approx. 5 % or more, and shifts to NORMAL mode when the upgrade is approx. 3 % or less.

1. Drive the vehicle with wide open throttle, closed throttle position and kickdown, and verify that following shifts are obtained. The shift points must be as shown in the table below.
   - 1GR→2GR, 2GR→3GR, 3GR→4GR, and 4GR→ 5GR upshifts and downshifts are obtained in D range (HOLD switch OFF).
   - 2GR→3GR, 3GR→ 4GR upshifts and 5GR→4GR, 4GR→3GR, 3GR→2GR downshifts are obtained in D range (HOLD switch ON).
   - 1GR→2GR, 2GR→3GR, 3GR→4GR upshifts and 5GR→4GR, 4GR→3GR, 3GR→2GR and 2GR→1GR downshifts are obtained in S range (HOLD switch OFF).
   - 2GR→3GR upshifts and 5GR→4GR, 4GR→3GR, 3GR→2GR downshifts are obtained in S range (HOLD switch ON).
   - 1GR→2GR, 2GR→3GR upshifts and 5GR→4GR, 4GR→3GR, 3GR→2GR and 2GR→1GR downshifts are obtained in L range (HOLD switch OFF).
   - 5GR→4GR, 4GR→3GR, 3GR→2GR downshifts are obtained in L range (HOLD switch ON).
2. Decelerate the vehicle under the following conditions, and verify the engine braking effect base on the turbine and engine speeds.
   - 5GR in D, S, L range.
   - 4GR in D range (HOLD switch ON), S, L range.
   - 3GR in S range(HOLD switch ON), L range.
   - 2GR in L range(HOLD switch ON).
3. Drive the vehicle and verify that TCC operation is obtained in 4GR and 5GR in D range(HOLD switch OFF) and 4GR in S range(HOLD switch OFF).

Note

- The shift solenoid electrical ON-OFF pattern is this chart describes the stabilized condition before and after shift control. The pattern may oscillate between ON and OFF momentarily while shifting-up or down. This is normal.

Vehicle speed at shift point table(D range)

Range	Mode	Throttle condition	Shift	Vehicle speed (km/h {mph})	Turbine speed (rpm)
D	NORMAL	Wide open throttle	D1→D2	48—54 {30—33}	5,450—6,100
			D2→D3	91—99 {57—61}	5,800—6,300
			D3→D4	138—148 {86—91}	5,650—6,000
			TCC ON (D4)	217—227 {135—140}	6,100—6,300
			D4→D5	200—210 {124—130}	5,600—5,850
			TCC ON (D5)	200—210 {124—130}	4,100—4,250
		Half throttle	D1→D2	33—41 {21—25}	3,750—4,700
			D2→D3	54—71 {34—44}	3,400—4,550
			D3→D4	77—104 {48—64}	3,150—4,250
			TCC ON (D4)	211—229 {131—141}	5,900—6,350
			D4→D5	160—186 {100—115}	4,500—5,150
			TCC ON (D5)	160—186 {100—115}	3,300—3,800
		Closed throttle position	D5→D4	45—51 {28—31}	950—1,000
			D4→D3	24—30 {15—18}	700—800
			D3→D1	7—13 {5—8}	300—500
		Kickdown	D5→D4	182—192 {113—119}	3,750—3,900
			D4→D3	126—136 {79—84}	3,550—3,750
			D3→D2	79—87 {49—53}	3,250—3,500
			D2→D1	36—42 {23—26}	2,300—2,650
	HOLD	ALL round	D2→D3	15—25 {10—15}	1,000—1,550
			D5→D4	202—208 {126—128}	4,150—4,250
			D4→D3	45—51 {28—31}	1,300—1,400
			D3→D2	7—13 {5—8}	300—500

Vehicle speed at shift point table(S range)

Range	Mode	Throttle condition	Shift	Vehicle speed (km/h {mph})	Turbine speed (rpm)
S	NORMAL	Wide open throttle	S1→S2	48—54 {30—33}	5,450—6,100
			S2→S3	91—99 {57—61}	5,800—6,300
			S3→S4	138—148 {86—91}	5,650—6,000
			TCC ON (S4)	217—227 {135—140}	6,100—6,300
		Half throttle	S1→S2	33—41 {21—25}	3,750—4,700
			S2→S3	54—71 {34—44}	3,400—4,550
			S3→S4	77—104 {48—64}	3,150—4,250
			TCC ON (S4)	211—229 {131—141}	5,900—6,350
		Closed throttle position	S5→S4	202—208 {126—128}	4,150—4,250
			S4→S3	24—30 {15—18}	700—800
			S3→S1	7—13 {5—8}	300—500
		Kickdown	S5→S4	200—210 {124—130}	4,100—4,250
			S4→S3	126—136 {79—84}	3,550—3,750
			S3→S2	79—87 {49—53}	3,250—3,500
			S2→S1	36—42 {23—26}	2,300—2,650
	HOLD	ALL round	S2→S3	15—25 {10—15}	1,000—1,550
			S5→S4	202—208 {126—128}	4,150—4,250
			S4→S3	138—144 {86—89}	3,900—4,000
			S3→S2	7—13 {5—8}	300—500

Vehicle speed at shift point table(L range)

Range	Mode	Throttle condition	Shift	Vehicle speed (km/h {mph})	Turbine speed (rpm)
L	NORMAL	Wide open throttle	L1→L2	48—54 {30—33}	5,450—6,100
			L2→L3	91—99 {57—61}	5,800—6,300
		Half throttle	L1→L2	33—41 {21—25}	3,750—4,700
			L2→L3	54—71 {34—44}	3,400—4,550
		Closed throttle position	L5→L4	202—208 {126—128}	4,150—4,250
			L4→L3	138—144 {86—89}	3,900—4,000
			L3→L1	7—13 {5—8}	300—500
		Kickdown	L5→L4	200—210 {124—130}	4,100—4,250
			L4→L3	136—146 {85—90}	3,800—4,050
			L3→L2	79—87 {49—53}	3,250—3,500
			L2→L1	36—42 {23—26}	2,300—2,650
	HOLD	ALL round	L5→L4	202—208 {126—128}	4,150—4,250
			L4→L3	138—144 {86—89}	3,900—4,000
			L3→L2	90—96 {56—59}	3,700—3,900

Noise and Vibration Test

1. Drive the vehicle and listen closely for any noise or vibration. The torque converter, drive shaft, and differential can be sources of noise and vibration if they are not functioning properly. Inspect these when searching for sources of noise and vibration.

P Position Test

1. Shift into P position on a gentle slope. Release the brake, and verify that the vehicle does not roll.
   - If the vehicle rolls, inspect the ATX. (See K2–182 AUTOMATIC TRANSAXLE SYMPTOM TROUBLESHOOTING.)

Evaluation

Condition	Possible Cause
No 1-2 up- or downshift	Stuck shift solenoid C Stuck shift valve C Wore 2-4 brake Trouble intermediate sensor
No 2-3 up- or downshift	Stuck shift solenoid A Stuck shift valve A Wore high clutch
No 3-4 up- or downshift	Stuck shift solenoid B Stuck shift valve B Wore 2-4 brake
No 4-5 up- or downshift	Stuck shift solenoid A Stuck shift valve A Wore direct clutch Trouble TFT
TCC non operation shift	Stuck TCC solenoid valve Stuck TCC valve
Incorrect shift point	Trouble VSS output signal Trouble TR switch Trouble TP signal and engine torque signal
Excessive shift shock slippage	Stuck pressure control solenoid Stuck pressure regulator valve Stuck pressure modifier valve Stuck accumulator valve A, B, or C Stuck 2-4 brake solenoid valve Stuck high clutch solenoid valve Stuck low clutch accumulator Stuck 2-4 brake accumlator Stuck high clutch accumlator Stuck direct clutch accumlator Stuck reduction accumlator Trouble VSS

Condition	Possible Cause
No Engine braking effect	Wore reduction brake band Stuck reduction reducing valve Stuck reduction timing valve Stuck reduction timing solenoid valve

End Of Sie

AUTOMATIC TRANSAXLE FLUID (ATF) INSPECTION

AME571419001W01

Automatic Transaxle Fluid (ATF) Condition Inspection

1. One way of determining whether the transaxle should be replaced is by noting:

- If the ATF is muddy or varnished.
- If the ATF smells strange or unusual.

ATF Condition

Condition			Possible cause
Clear dark red		Normal	—
Light red (pink)		Contaminated with water	• Broken oil cooler inside of radiator • Poor filler tube installation: Problem could be occurring to parts inside the transaxle by water contamination. If necessary, exchange transaxle.
Reddish brown	Has burnt smell and metal specs are found	Deteriorated ATF	Defect powertrain components inside of transaxle: Specks cause wide range of problems by plugging up in oil pipe, control valve body and oil cooler in radiator. • When large amount of metal specks are found. Exchange transaxle if necessary. • Implement flushing operation as there is a possibility to have specks plugging up oil pipe and/ or oil cooler inside of radiator.
	Has no burnt smell	Normal	• Discoloration by oxidation

Automatic Transaxle Fluid (ATF) Level Inspection

Caution

- **The ATF amount varies according to ATF's temperature. Therefore, when checking the ATF level or replacing the ATF, use a thermometer to measure the temperature then adjust the ATF amount to the specified level according to the specified temperature.**

1. Park the vehicle on level ground.
2. Apply the parking brake and position wheel chocks securely to prevent the vehicle from rolling.
3. Adjust the length of the thermistor probe measure to the measure same as the dipstick and hold the probe with a paper holder.
4. Insert into the filler tube and measure the temperature.
5. Warm up the engine until the ATF reaches (**60—70 °C {140—158 °F}**).

Caution

- **Do not warm the transaxle by performing stalls. This will damage the torque converter.**

Note

- In some cases it may be necessary to inspect the ATF in the cool range **15—25 °C {59—77 °F}** before warming up the engine.

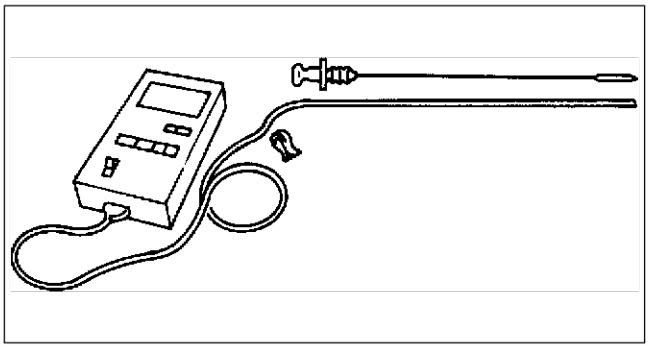

W6U517WCV

6. While depressing the brake pedal, shift the selector lever to each range (P—2), pausing momentarily in each range.

7. Shift back to P position.

Note
- If the ATF level is too high or too low in hot condition, the following problems may be the cause.

ATF level	Condition	Possible cause
Too low	Line pressure is lower than the specification	Air in transaxle oil passage due to slipping or damaged clutch mechanism
Too high	ATF is hot	ATF deteriorated due to slipping clutch or stuck valve

8. While the engine is idling, verify that the ATF level is in the HOT (**65 °C {149 °F}**) range. Add the ATF specified type of, if necessary. (See K2–75 AUTOMATIC TRANSAXLE FLUID (ATF) REPLACEMENT.)

ATF type
ATF M-III or equivalent (e.g. Dexron®III)

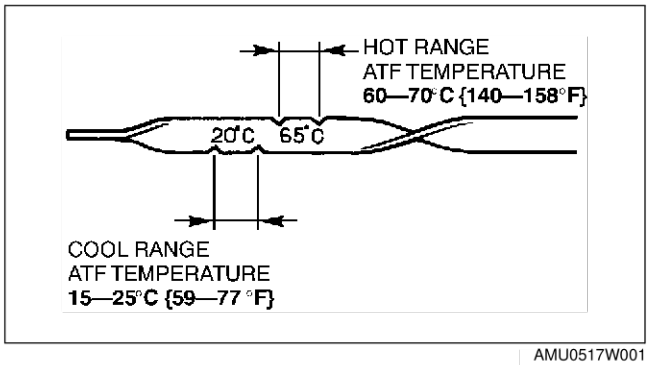

AMU0517W001

End Of Sub

AUTOMATIC TRANSAXLE FLUID (ATF) REPLACEMENT

AME571419001W02

Warning
- **When the transaxle and ATF are hot, they can badly burn you. Turn off the engine and wait until they are cool before changing the ATF.**

1. Remove the oil dipstick.
2. Remove the oil drain plug and washer.
3. Drain the ATF into a container.
4. Install a new washer and the drain plug.

Tightening torque
39—54 N·m {3.9—5.6 kgf·m, 29—40 ft·lbf}

5. Add the specified type of ATF through the oil filler tube, until ATF level reaches lower notch of dipstick.

ATF type
ATF M-III or equivalent (e.g. Dexron®III)

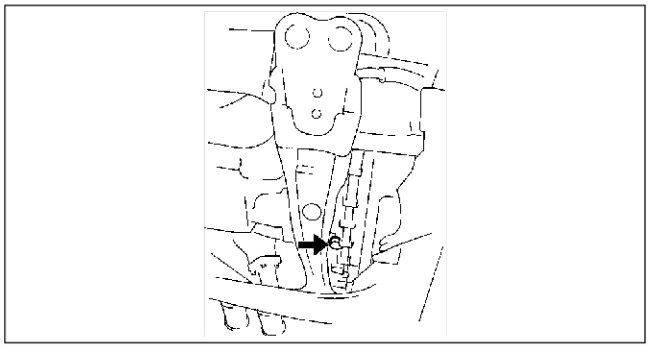

AMU0517W013

6. Verify that the ATF level is in the HOT (**65 °C {149 °F}**) range.
   - Add ATF to the specified level as necessary.

End Of Sub

HOLD SWITCH INSPECTION

AME571446030W01

Inspection of Operation

1. Turn the ignition switch from OFF to the ON position.
2. Verify that the HOLD indicator light is not illuminated. Press the HOLD switch and verify that the HOLD indicator light illuminates.
   - If not as specified, inspect the terminal voltage of the HOLD switch.

Inspection of Voltage

1. Turn the ignition switch to the ON position.
2. Measure the voltage at the HOLD switch connector.
   - If not as specified, inspect for continuity at the HOLD switch.(See K2–76 Inspection of Continuity.)

Position		Terminal	
		I	J
OFF (Normal)	(V)	0	B+
ON (Depressed)	(V)	0	0

(V): Voltage

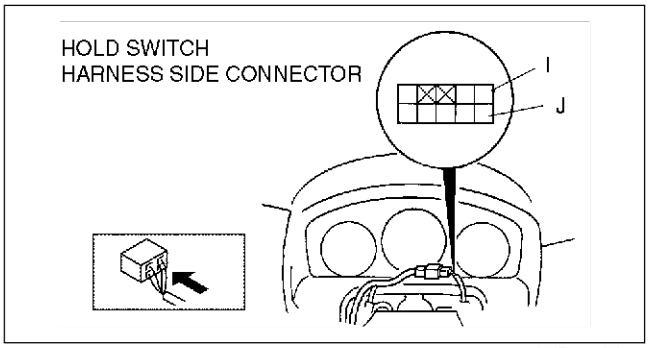

AME5714W021

Inspection of Continuity

1. Disconnect the HOLD switch connector.
2. Inspect for continuity at the HOLD switch.
   - If the switch is okay, inspect the wiring harness. (HOLD switch—TCM, HOLD switch—Body ground.)
   - If not as specified, replace the selector lever component. (See K2–113 SELECTOR LEVER REMOVAL/INSTALLATION.)

○——○ : Continuity

Position	Terminal	
	I	J
OFF (Normal)		
ON (Depressed)	○	○

AMU0517W052

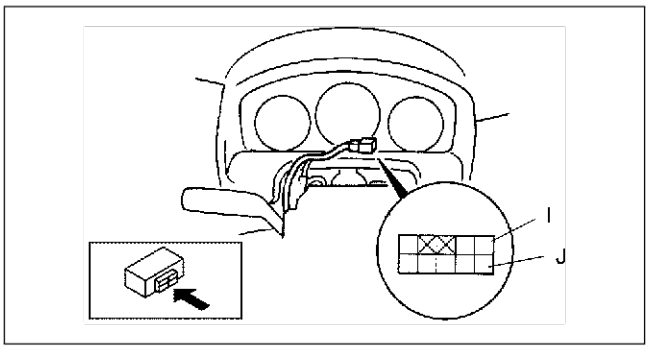

AMJ5814W070

End Of Sie

HOLD SWITCH REMOVAL/INSTALLATION

AME571446030W02

1. Disconnect the negative battery cable.
2. Remove the steering wheel. (See Section N.)
3. Remove the column cover.
4. Remove the combination switch.
5. Disconnect the connector.
6. Remove the selector lever component.
7. Install the selector lever component.

Tightening torque
7.9—10.7 N·m {80—110 kgf·cm, 69.5—95.4 in·lbf}

8. Connect the connector.
9. Install the combination switch.
10. Install the column cover.
11. Install the steering wheel. (See Section N.)
12. Connect the negative battery cable.

End Of Sie

TRANSAXLE RANGE (TR) SWITCH INSPECTION

AME571419440W01

Note
- Input signals of the TR switch can be inspected with a WDS or equivalent. (See K2–88 TCM INSPECTION.)

Inspection of Operation

1. Verify that the starter operates only with the ignition switch at the START position and the selector lever in P and N positions.
   - If not as specified, inspect for continuity at the TR switch. (See K2–77 Inspection of Continuity.)
2. Verify that the back-up lights illuminate when shifted to R position with the ignition switch at the ON position.
   - If not as specified, inspect for continuity at the TR switch.

Inspection of Continuity

1. Disconnect the TR switch connector.
2. Inspect for continuity at the TR switch.
   - If not as specified, adjust the TR switch, then reinspect the TR switch. (See K2–79 TRANSAXLE RANGE (TR) SWITCH ADJUSTMENT.)

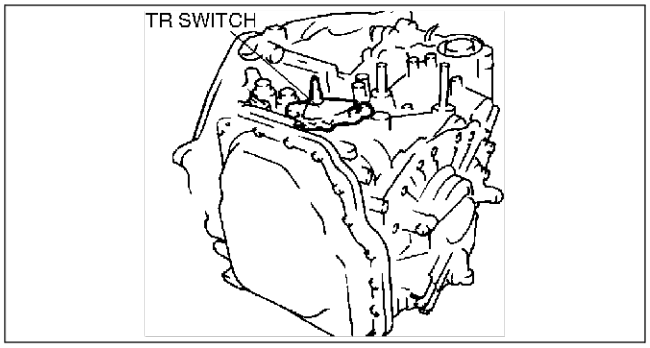

AMU0517W024

○——○: Continuity

Position/ Range	Connector terminal								
	H	B	C	A	E	D	G	I	F
P	○	○	○	○					
R			○		○				
N	○	○	○			○			
D			○				○		
S			○					○	
L			○						○

AME5714W012

3. Connect the TR switch connector.

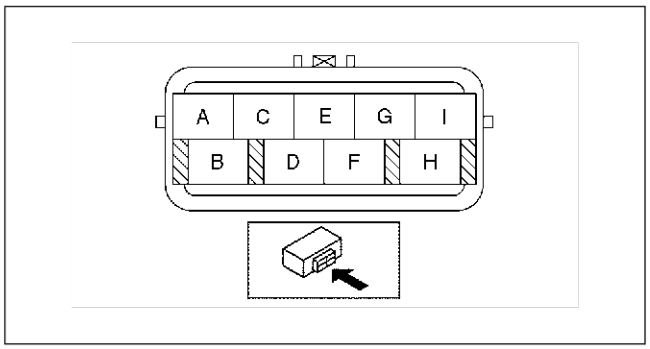

AMJ5814W072

End Of Sie

TRANSAXLE RANGE (TR) SWITCH REMOVAL/INSTALLATION

AME571419440W02

1. Disconnect the negative battery cable.
2. Remove the battery carrier, battery tray, and battery.
3. Remove the air cleaner component. (See F4–60 INTAKE-AIR SYSTEM REMOVAL/INSTALLATION.)

Caution

- **Water or foreign objects entering the connector can cause a poor connection or corrosion. Be sure not to drop water or foreign objects on the connector when disconnecting it.**

4. Disconnect the TR switch connector.
5. Remove the spring and disconnect the selector cable.
6. Rotate the manual shaft to the N position.

Caution

- **Do not use an impact wrench. Hold the manual shaft lever when removing the manual shaft nut, or the transaxle may be damaged.**

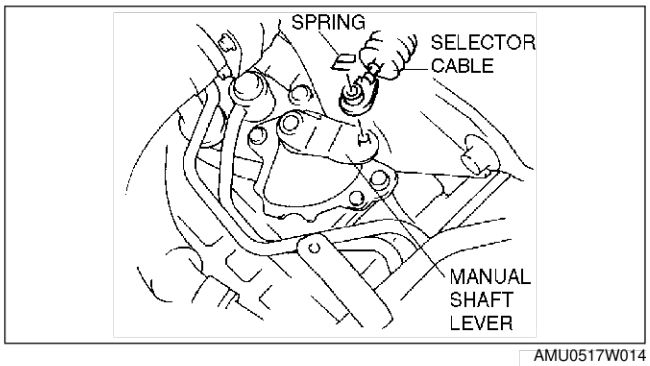

AMU0517W014

K2

7. Set the adjustable wrench as shown to hold the manual shaft lever.
8. Remove the manual shaft nut and washer.
9. Remove the manual shaft lever.
10. Remove the TR switch.

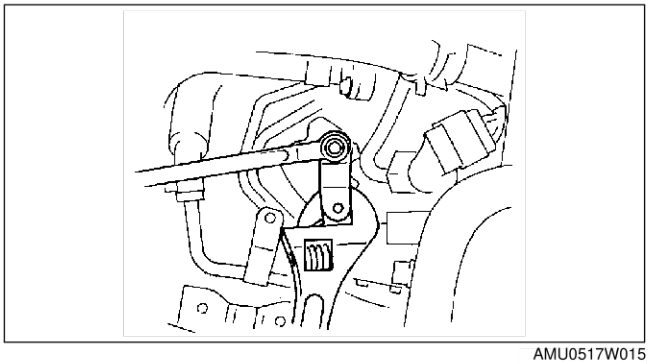

AMU0517W015

11. Rotate the manual shaft to the right fully, them return 2 notches to set the N position.

Caution
- **Improper adjustment of the TR switch will cause abnormal operation of the automatic transaxle. Be sure to use the SST to adjust the TR switch correctly.**

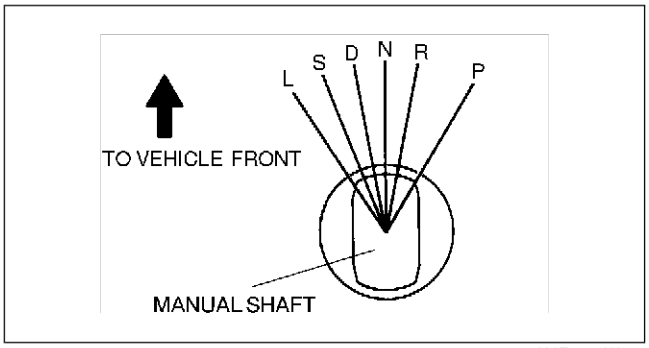

AME5714W013

12. Using the SST and by turning the TR switch, adjust the positions of the manual shaft and the TR switch neutral hole.
13. Tighten the TR switch mounting bolts.

Tightening torque
4.9—6.9 N·m
{50.0—70.4 kgf·cm, 43.4—61.1 in·lbf}

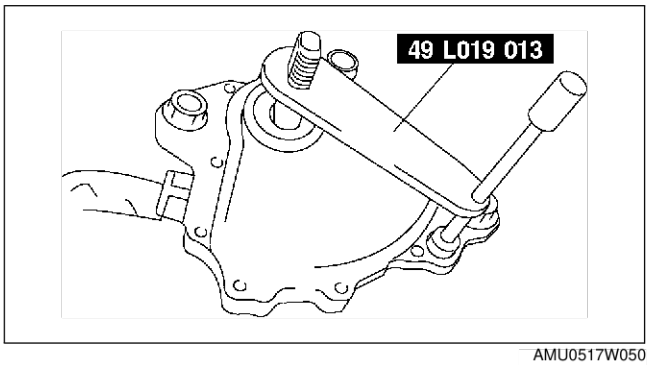

AMU0517W050

14. Inspect for continuity at the TR switch between terminals C and D.
15. Remove the SST.
16. Install the manual shaft lever and washer.

Caution
- **Do not use an impact wrench. Hold the manual shaft lever when tightening the manual shaft nut, or the transaxle may be damaged.**

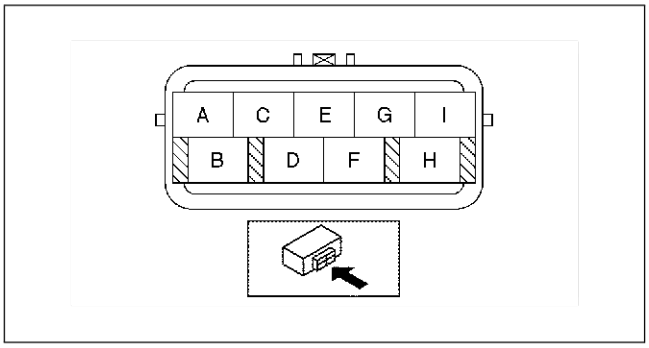

AMJ5814W072

17. Set the adjustable wrench as shown to hold the manual shaft lever.
18. Tighten the manual shaft nut using a torque wrench.

Tightening torque
31—46 N·m {3.2—4.7 kgf·m, 23—34 ft·lbf}

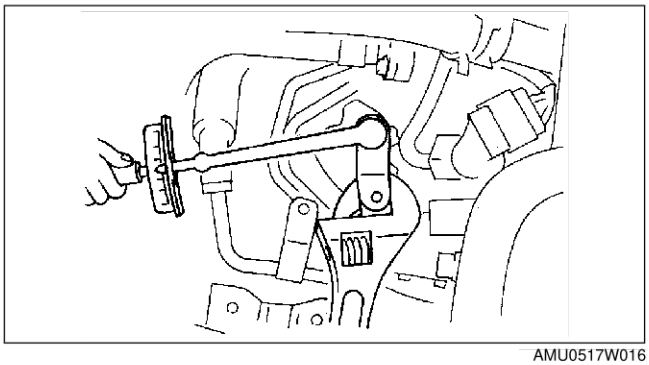

AMU0517W016

19. Install the spring as shown in the figure.
    - If it is bend, replace a new spring.

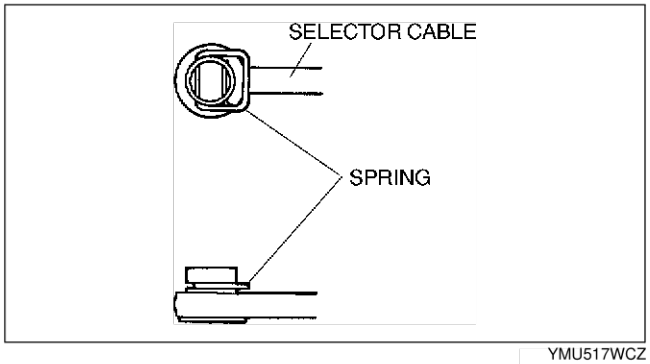

YMU517WCZ

20. Verify that the selector lever range position and TR switch are aligned, then connect the selector cable.
21. Inspect for continuity at the TR switch. (See K2–77 Inspection of Continuity.)
22. Connect the TR switch connector.
23. Install the air cleaner component. (See F4–60 INTAKE-AIR SYSTEM REMOVAL/ INSTALLATION.)
24. Install the battery carrier, battery tray, and battery.
25. Connect the negative battery cable.
26. Inspect operation of the TR switch. (See K2–76 Inspection of Operation.)

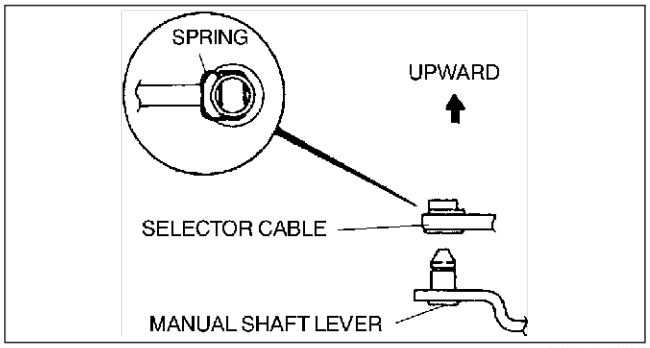

YMU517WAL

End Of Sie

TRANSAXLE RANGE (TR) SWITCH ADJUSTMENT

AME571419440W03

Caution
- **Water or foreign objects entering the connector can cause a poor connection or corrosion. Be sure not to drop water or foreign objects on the connector when disconnecting it.**

1. Disconnect the TR switch connector.
2. Remove the spring and disconnect the selector cable.

Note
- Do not reuse the clip when any of the hooks are deformed.

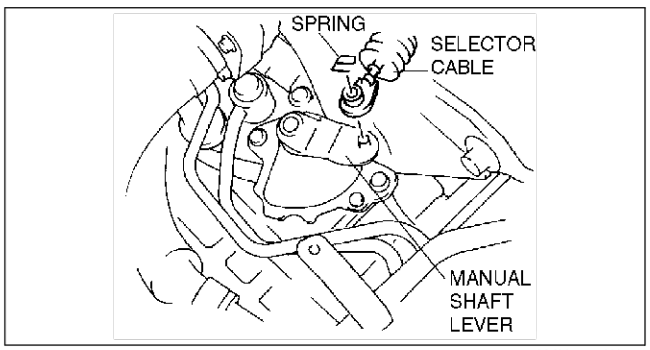

AMU0517W014

3. Press the hooks of the clips, and remove the selector cable and clips together from the bracket as shown.

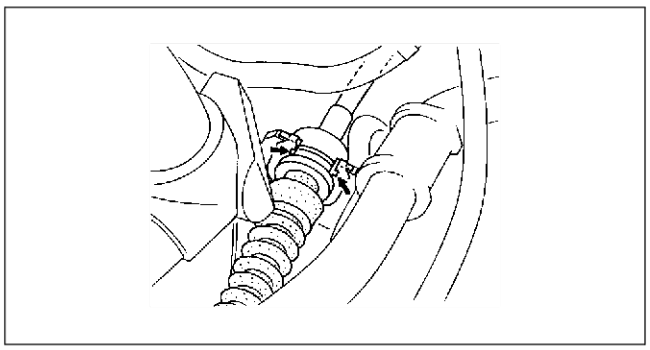
YMU518WAC

4. Rotate the manual shaft to the right fully, then return 2 notches to set the N position.
5. Loosen the TR switch mounting bolts.

Caution
- **Improper adjustment of the TR switch will cause abnormal operation of the automatic transaxle. Be sure to use the SST to adjust the TR switch correctly.**

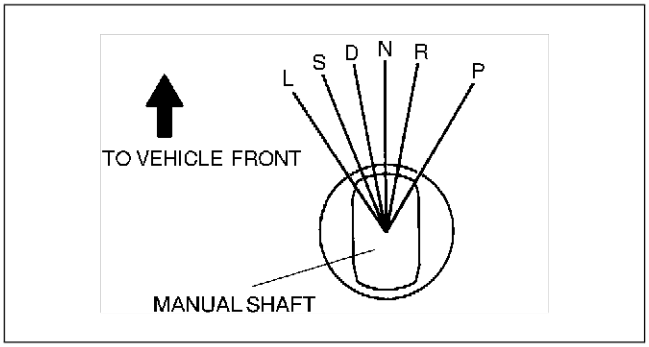

AME5714W013

6. Using the SST and by turning the TR switch, adjust the positions of the manual shaft and the TR switch neutral hole.
7. Tighten the TR switch mounting bolts.

Tightening torque
4.9—6.9 N·m
{50.0—70.4 kgf·cm, 43.4—61.1 in·lbf}

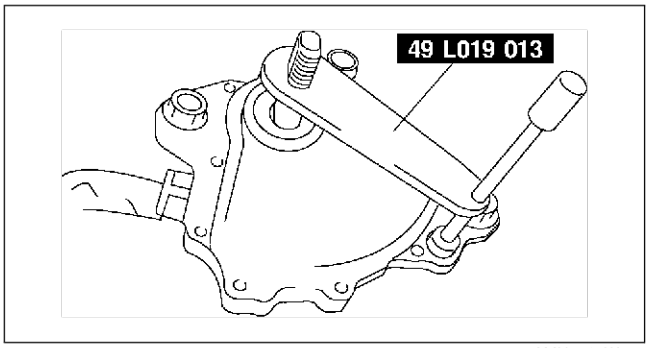

AMU0517W050

8. Remove the SST.
9. Inspect for continuity at the TR switch. (See K2–77 Inspection of Continuity.)
10. Connect the TR switch connector.
11. Connect the selector cable and install a spring and clip.
12. Inspect operation of the TR switch. (See K2–76 Inspection of Operation.)

End Of Sie

TRANSAXLE FLUID TEMPERATURE (TFT) SENSOR REMOVAL/INSTALLATION

AME571419010W02

1. Remove the automatic transaxle. (See K2–95 AUTOMATIC TRANSAXLE REMOVAL/INSTALLATION.)
2. Disassemble the automatic transaxle, and then remove the TFT sensor. (See Automatic Transaxle Workshop Manual JA5A-EL)
3. Install a TFT sensor, and then assemble the automatic transaxle. (See Automatic Transaxle Workshop Manual JA5A-EL)
4. Remove the automatic transaxle. (See K2–95 AUTOMATIC TRANSAXLE REMOVAL/INSTALLATION.)
5. Carry out the line pressure test. (See K2–67 Line Pressure Test.)
6. Inspect the operation of the TR switch. (See K2–76 TRANSAXLE RANGE (TR) SWITCH INSPECTION.)
7. Inspect the operation of the selector lever. (See K2–112 SELECTOR LEVER INSPECTION.)
8. Carry out the mechanical system test. (See K2–67 MECHANICAL SYSTEM TEST.)
9. Carry out the road test. (See K2–70 ROAD TEST.)

End Of Sie

TRANSAXLE FLUID TEMPERATURE (TFT) SENSOR INSPECTION

AME571419010W03

1. Disconnect the coupler component.
2. Remove the oil dipstick.
3. Insert the thermistor probe into the filler tube.
4. Start the engine.

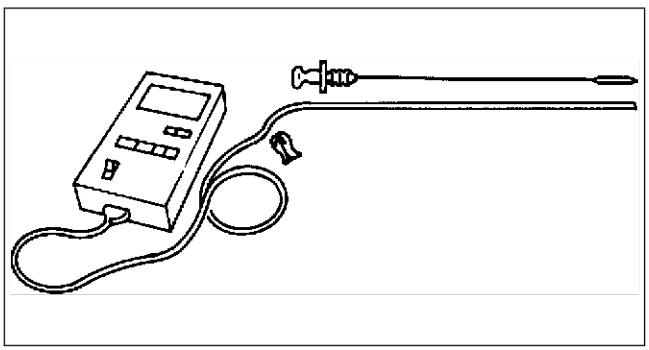
W6U517WCV

5. Measure resistance between the terminals G and F.
   - If not as specified, replace the TFT sensor. (See K2–95 AUTOMATIC TRANSAXLE REMOVAL/INSTALLATION.) (See Automatic Transaxle Workshop Manual JA5A-EL.)

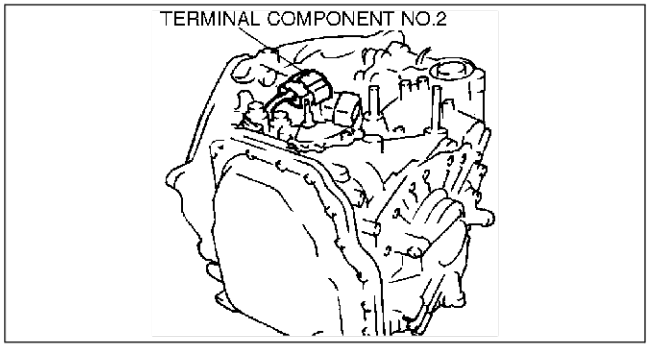

AMU0517W031

ATF temperature (°C {°F})	Resistance (kilohm)
-20 {-4}	15.87—17.54
0 {32}	5.73—6.33
20 {68}	2.38—2.63
40 {104}	1.10—1.22
60 {140}	0.56—0.62
80 {176}	0.31—0.34
100 {212}	0.18—0.20
120 {248}	0.11—0.12
130 {266}	0.09—0.10

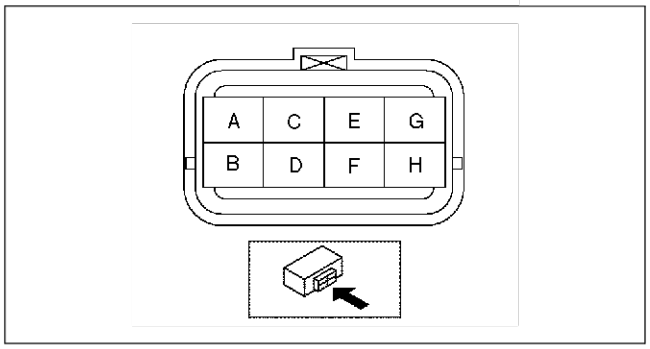

AMJ5814W076

6. Connect the coupler component.

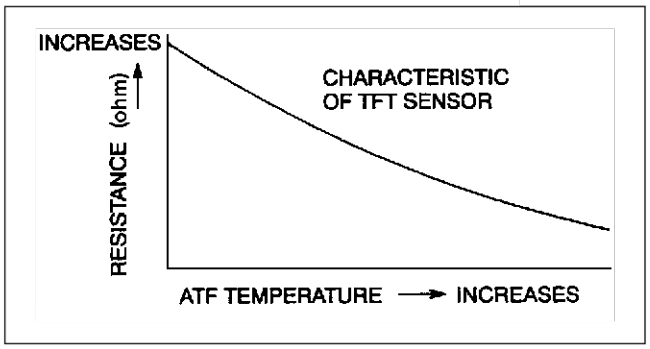

AMU0517W027

INPUT/TURBINE SPEED SENSOR INSPECTION

AME571421550W02

On-Vehicle Inspection

1. Disconnect the terminal component No.2 connector.

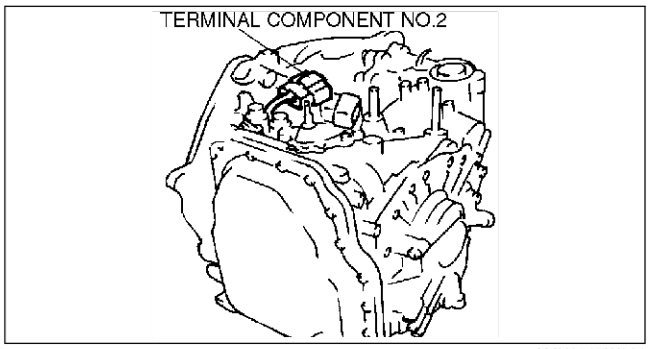

AMU0517W031

2. Measure resistance between the terminals E and F.
   - If not as specified, inspect the input/turbine speed sensor. (See K2–82 Inspection of Individual Part.)

   Resistance (ATF temperature: 20 °C {68 °F})
   513—627 ohms

3. Connect the terminal component No.2 connector.

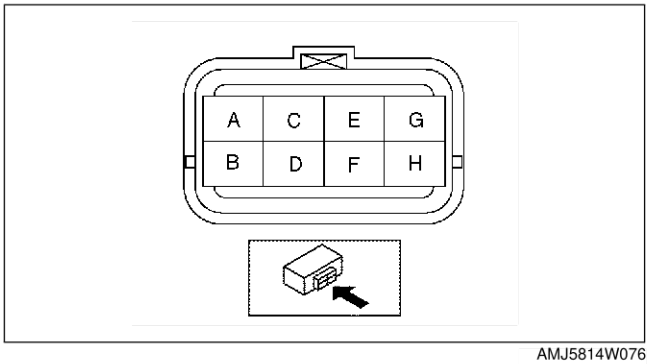

AMJ5814W076

Inspection of Individual Part

1. Remove the input/turbine speed sensor. (See K2–82 INPUT/TURBINE SPEED SENSOR REMOVAL/INSTALLATION.)
2. Measure resistance between the terminals of the input/turbine speed sensor.
   - If not as specified, replace the input/turbine speed sensor.
   - If it is normal, replace the harness.

   Resistance (ATF temperature: 20 °C {68 °F})
   513—627 ohms

3. Install the input/turbine sensor. (See K2–82 INPUT/TURBINE SPEED SENSOR REMOVAL/INSTALLATION.)

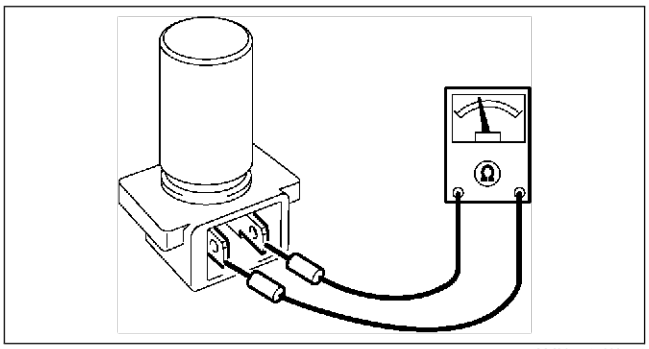
AMU0517W051

End Of Sie

INPUT/TURBINE SPEED SENSOR REMOVAL/INSTALLATION

AME571421550W03

1. Remove the automatic transaxle. (See K2–95 AUTOMATIC TRANSAXLE REMOVAL/INSTALLATION.)
2. Remove the input/turbine speed sensor. (See Automatic Transaxle Workshop Manual JA5A-EL.)
3. Install the input/turbine speed sensor. (See Automatic Transaxle Workshop Manual JA5A-EL.)
4. Install the automatic transaxle. (See K2–95 AUTOMATIC TRANSAXLE REMOVAL/INSTALLATION.)

End Of Sie

INTERMEDIATE SENSOR INSPECTION

AME571417400W02

On-Vehicle Inspection

1. Disconnect the terminal component No.2 connector.

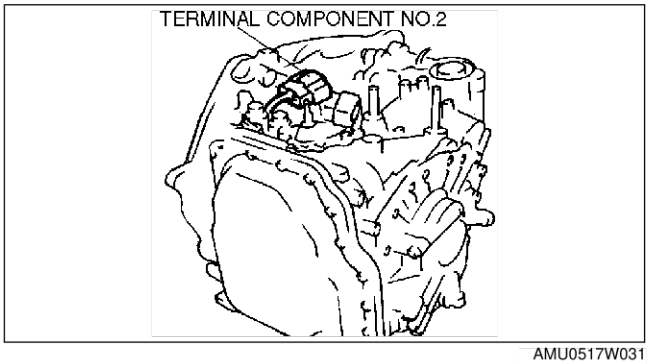

AMU0517W031

2. Measure resistance between the terminals C and D.
   - If not as specified, inspect the intermediate sensor. (See K2–83 Inspection of Individual Part.)

   Resistance (ATF temperature: 20 °C {68 °F})
   513—627 ohms

3. Connect the terminal component No.2 connector.

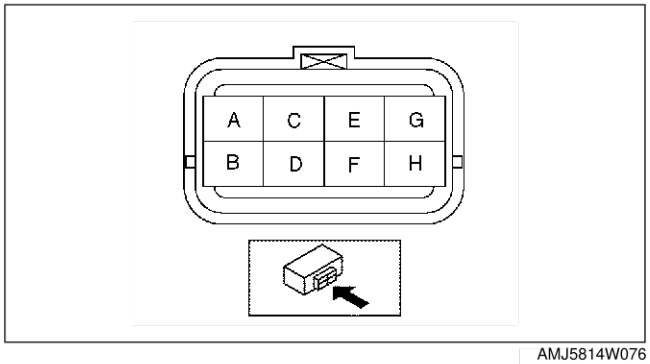

AMJ5814W076

Inspection of Individual Part

1. Remove the intermediate sensor. (See K2–83 INTERMEDIATE SENSOR REMOVAL/INSTALLATION.)
2. Measure resistance between the terminals of the intermediate speed sensor.
   - If not as specified, replace the intermediate sensor.
   - If it is normal, replace the harness.

   Resistance (ATF temperature: 20 °C {68 °F})
   513—627 ohms

3. Install the intermediate sensor. (See K2–83 INTERMEDIATE SENSOR REMOVAL/INSTALLATION.)

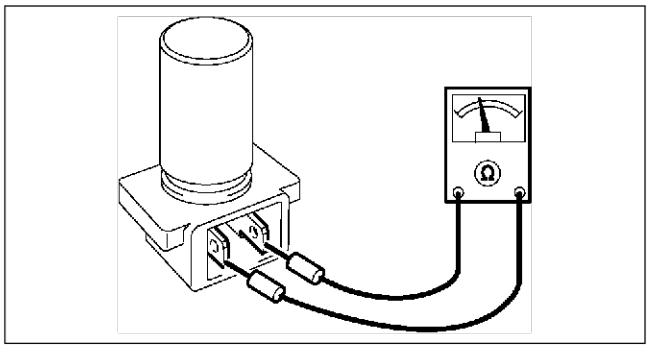

AMU0517W051

End Of Sie

INTERMEDIATE SENSOR REMOVAL/INSTALLATION

AME571417400W03

1. Remove the automatic transaxle. (See K2–95 AUTOMATIC TRANSAXLE REMOVAL/INSTALLATION.)
2. Remove the intermediate sensor. (See Automatic Transaxle Workshop Manual JA5A-EL.)
3. Install the intermediate sensor. (See Automatic Transaxle Workshop Manual JA5A-EL.)
4. Install the automatic transaxle. (See K2–95 AUTOMATIC TRANSAXLE REMOVAL/INSTALLATION.)

End Of Sie

VEHICLE SPEEDOMETER SENSOR (VSS) INSPECTION

AME571417400W04

On-Vehicle Inspection

1. Disconnect the terminal component No.2 connector.

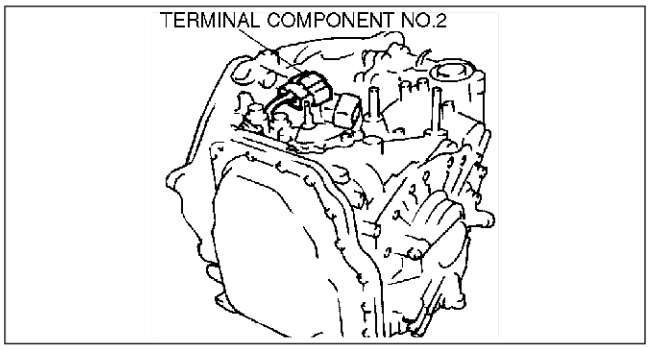

AMU0517W031

2. Measure resistance between the terminals A and B.
   - If not as specified, inspect the VSS sensor. (See K2–84 Inspection of Individual Part.)

   Resistance (ATF temperature: 20 °C {68 °F})
   513—627 ohms

3. Connect the terminal component No.2 connector.

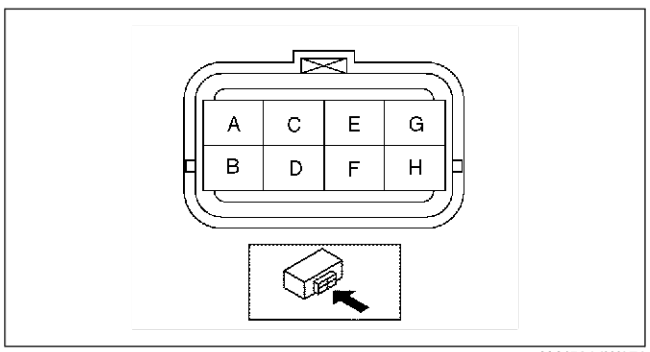

AMJ5814W076

K2

Inspection of Individual Part

1. Remove the VSS sensor. (See K2–84 VEHICLE SPEEDOMETER SENSOR (VSS) REMOVAL/INSTALLATION.)
2. Measure resistance between the terminals of the VSS speed sensor.
   - If not as specified, replace the VSS sensor.
   - If it is normal, replace the harness.

   Resistance (ATF temperature: 20 °C {68 °F})
   513—627 ohms

3. Install the VSS sensor. (See K2–84 VEHICLE SPEEDOMETER SENSOR (VSS) REMOVAL/INSTALLATION.)

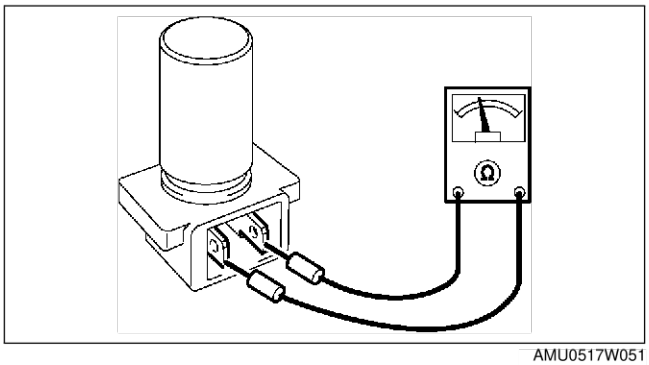

AMU0517W051

End Of Sie

VEHICLE SPEEDOMETER SENSOR (VSS) REMOVAL/INSTALLATION

AME571417400W05

1. Remove the automatic transaxle. (See K2–95 AUTOMATIC TRANSAXLE REMOVAL/INSTALLATION.)
2. Remove the VSS sensor. (See Automatic Transaxle Workshop Manual JA5A-EL.)
3. Install the VSS sensor. (See Automatic Transaxle Workshop Manual JA5A-EL.)
4. Install the automatic transaxle. (See K2–95 AUTOMATIC TRANSAXLE REMOVAL/INSTALLATION.)

End Of Sie

SOLENOID VALVE INSPECTION

AME571421280W02

Resistance Inspection (On-Vehicle)

1. Disconnect the negative battery cable.
2. Disconnect the terminal component No.1 connector.

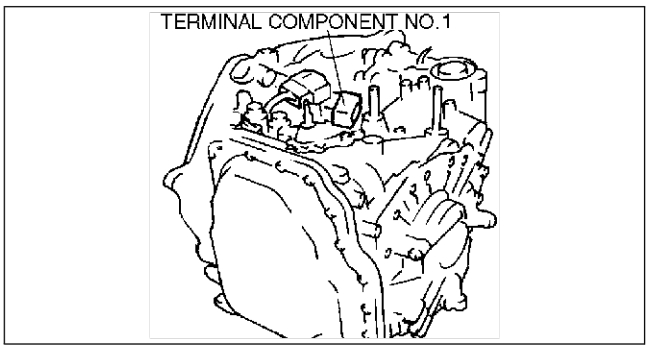

AMU0517W033

3. Measure the resistance between the following terminals.
   - If not as specified, inspect each solenoid valve. (See K2–85 Resistance Inspection (Off-Vehicle).)

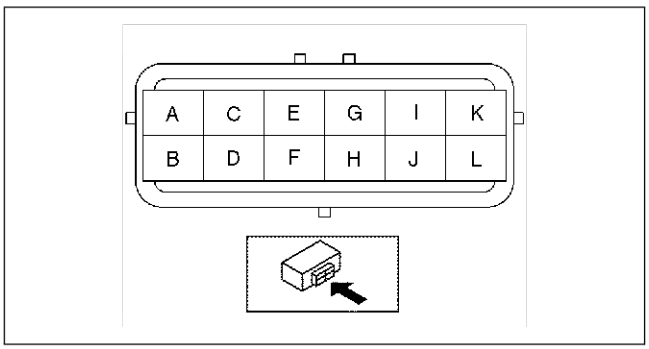

AMJ5814W074

ATF temperature: 20 °C {68 °F}

Terminals	Solenoid valve	Resistance (ohm)
A—J	2-4 brake solenoid valve	2.6—3.2
B—J	TCC solenoid valve	12.0—13.2
C—J	High clutch solenoid valve	2.6—3.2
D—J	Pressure control solenoid	2.6—3.2
E—J	Reduction timing solenoid valve	14—18
F—J	Shift solenoid C	14—18
G—J	Shift solenoid B	14—18
H—J	Neutral shift solenoid valve	14—18
I—J	Shift solenoid A	14—18

4. Connect the terminal component No.1 connector.
5. Connect the negative battery cable.

Operating Inspection (On-Vehicle)

1. Disconnect the terminal component No.1 connector.

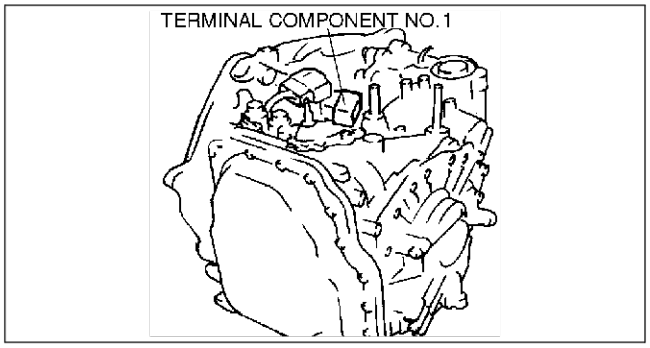

AMU0517W033

Caution

- **Do not apply battery positive voltage to terminals for more than three seconds.**

Note

- Because the operation sound of the valves is small, inspect in a quiet place.

2. Apply battery positive voltage to terminals A, B, C, D, E, F, G, H, I and battery negative voltage to GND, and verify that operating sound is heard from solenoid.
   - If the “click” is not heard, inspect the transaxle harness.
     - — If the transaxle harness is okay, perform the resistance inspection (off-vehicle inspection).
     - — If there is a problem, repair or replace the transaxle harness.
3. Connect the terminal component No.1 connector.

Resistance Inspection (Off-Vehicle)

1. Remove each solenoid valve. (See K2–86 SOLENOID VALVE REMOVAL/INSTALLATION.)
2. Measure the resistance of each solenoid valve individually.
   - If not specified, replace the solenoid valve.
   - If it is normal, replace the harness.

Pressure control solenoid, 2-4 brake solenoid valve, and high clutch solenoid valve

Resistance: 2.6—3.2 ohms (20 °C {68 °F})

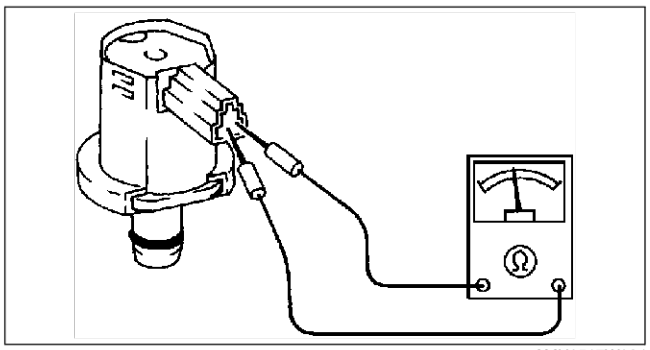
AMU0517W034

Shift solenoid A, B, C, neutral shift solenoid valve, and reduction timing solenoid valve

Resistance: 14—18 ohms (20 °C {68 °F})

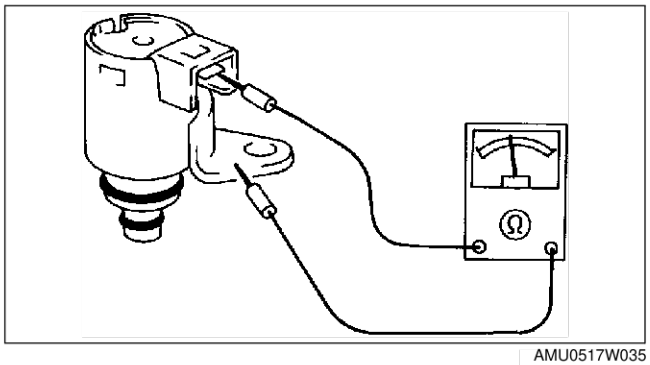
AMU0517W035

TCC solenoid valve

Resistance: 12—13.2 ohms (20 °C {68 °F})

3. Install each solenoid valve. (See K2–86 SOLENOID VALVE REMOVAL/INSTALLATION.)

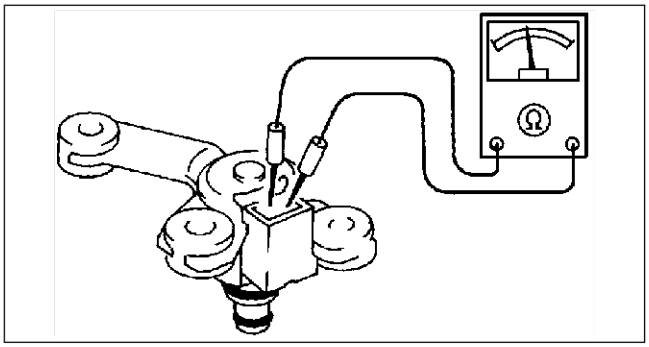

AMU0517W036

End Of Sie

SOLENOID VALVE REMOVAL/INSTALLATION

AME571421280W03

1. Remove the control valve body. (See K2–100 CONTROL VALVE BODY REMOVAL/INSTALLATION.)
2. Remove the solenoid valves and manual valve.

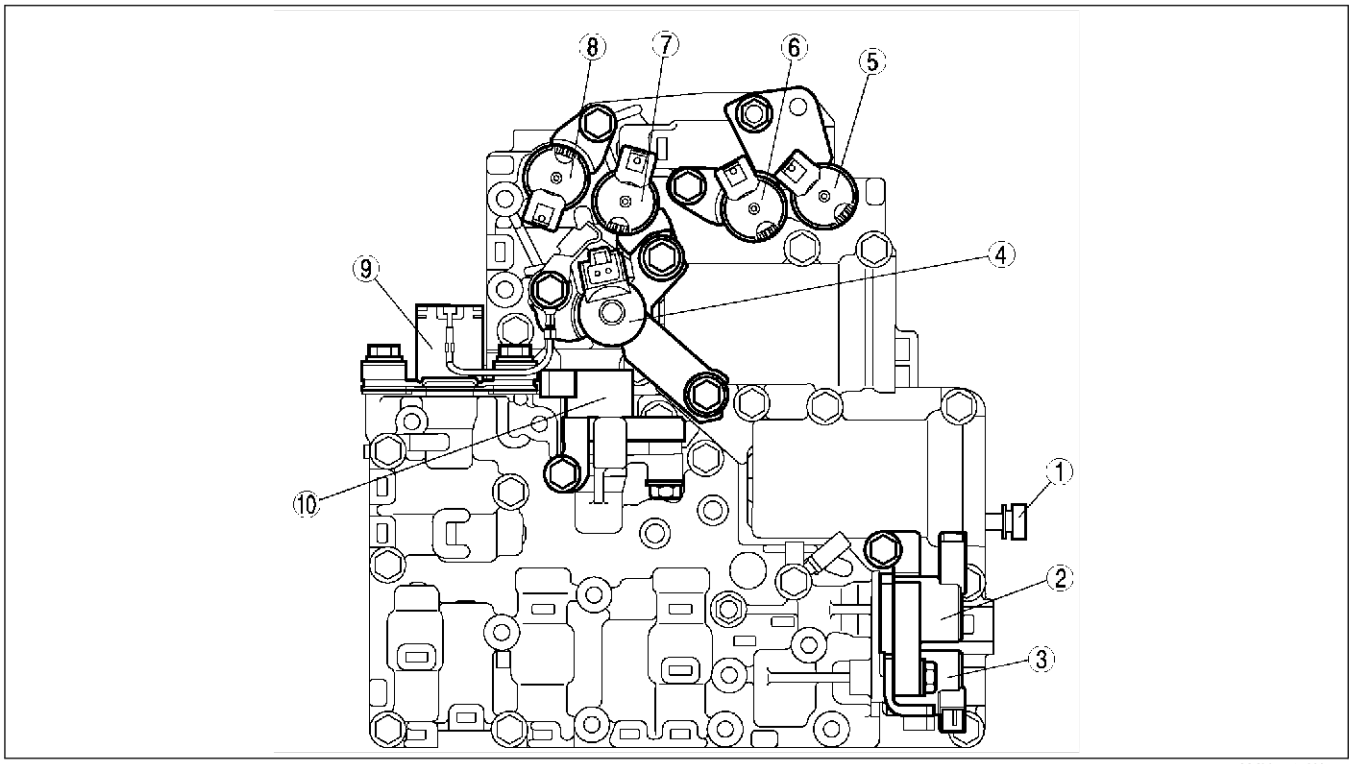

AMU0517W037

1	Manual valve
2	2-4 brake solenoid valve
3	Neutral shift solenoid valve
4	TCC solenoid valve
5	Shift solenoid C

6	Shift solenoid B
7	Reduction timing solenoid valve
8	Shift solenoid A
9	Pressure control solenoid
10	High clutch solenoid valve

3. Apply ATF to a new O-ring and install it on the solenoid valve.
4. Install the solenoid valve and manual valve in the control valve body.

Tightening torque
8.34—10.30 N·m
{85—105 kgf·cm, 74—91 in·lbf}

5. Install the control valve body. (See K2–100 CONTROL VALVE BODY REMOVAL/INSTALLATION.)
6. Add the ATF while the engine is idling, and inspect the ATF level and leakage. (See K2–75 AUTOMATIC TRANSAXLE FLUID (ATF) REPLACEMENT.) (See K2–74 Automatic Transaxle Fluid (ATF) Level Inspection.)
7. Carry out the time lag test and line pressure test. (See K2–67 MECHANICAL SYSTEM TEST.)
8. Carry out the road test. (See K2–70 ROAD TEST.)

HOLD INDICATOR LIGHT INSPECTION

AME571455480W01

Inspection of Operation

1. Turn the ignition switch from OFF to ON position.

Note
- The HOLD indicator light will illuminate if a malfunction exists in any of the EC-AT system components.

2. Verify that the HOLD indicator light is not illuminated.
3. Press the switch and verify that the HOLD indicator illuminates.
   - If the HOLD switch function is not as specified, after checking the HOLD switch (See K2–75 HOLD SWITCH INSPECTION.), inspect the terminal voltage of the HOLD indicator light.

Inspection of Voltage

1. Turn the ignition switch on.
2. Measure voltage between terminal 3J and a ground.

Voltage	Action
B+	Go to next step
Other	• Replace METER fuse • Repair wiring harness (METER fuse—instrument cluster)

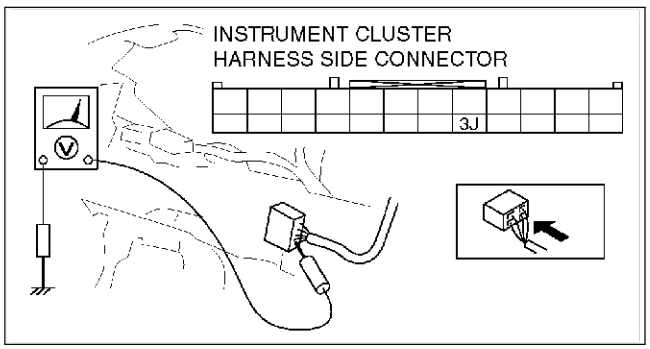

AME5714W022

Inspection of Continuity

1. Disconnect the instrument cluster connector.
2. Disconnect the TCM connector.
3. Inspect continuity between instrument cluster connector terminal 1H and TCM terminal 1E.
   - If not as specified, inspect the wiring harness (instrument cluster—TCM).
   - If as specified, go to the next step.

Terminals	Continuity
1H— (TCM 1E)	Yes

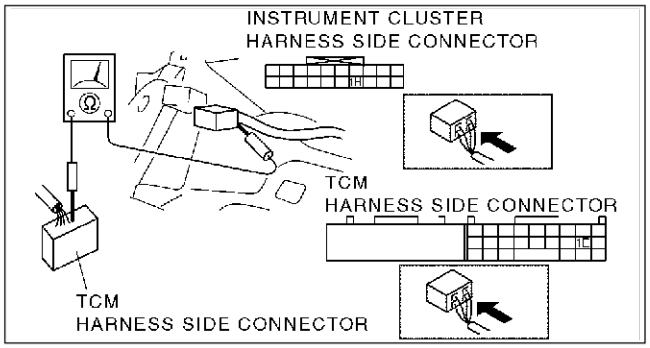

AME5714W014

4. Inspect continuity between terminals 1H and 3J.
   - If not as specified, replace the instrument cluster or bulb.

Terminals	Continuity
1H—3J	Yes

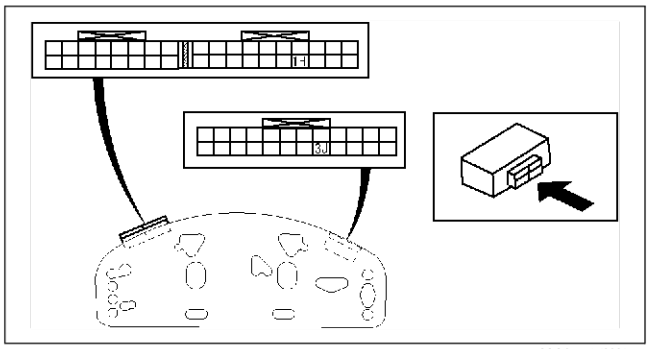

AMJ5614W107

End Of Ste

TCM INSPECTION

AME571418901W11

Terminal Voltage Table (Reference)

Note

- Use the ground of terminal 1C and 1Y of the TCM when measuring terminal voltage, as an error may occur when connecting the negative circuit tester to ground.

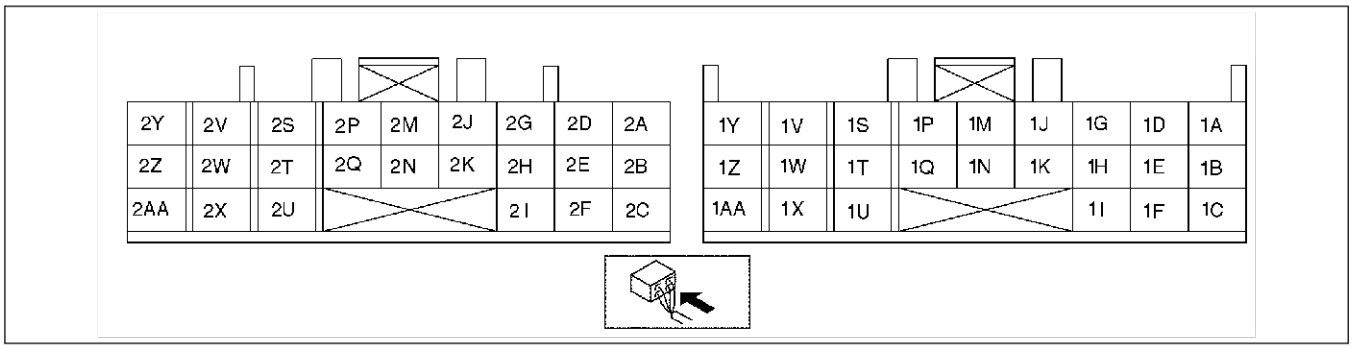

AMJ5814W078

Terminal	Signal	Connected to	Test Condition	Voltage (V)	Action
1A	Diagnostic test mode	DLC terminal TAT	Ignition switch ON	Below 10	• Inspect TAT terminal (See G–10 BATTERY INSPECTION) • Inspect related harness
			TAT terminal grounded	0	
1B	TFT sensor (GND)	TFT sensor	Constant	Continuity	• Inspect TFT sensor (See K2–80 TRANSAXLE FLUID TEMPERATURE (TFT) SENSOR INSPECTION) • Inspect related harness
1C	GND	GND	Constant	Below 1.0	• Inspect related harness
1D	—	—	—	—	—
1E	HOLD indicator light	HOLD switch	HOLD switch OFF	B+	• Inspect HOLD indicator light (See K2–87 HOLD INDICATOR LIGHT INSPECTION) • Inspect related harness
			HOLD switch ON	Below 1.0	
1F	TFT sensor	TFT sensor	ATF temperature 20 °C {68 °F}	Approx. 1.55	• Inspect TFT sensor (See K2–80 TRANSAXLE FLUID TEMPERATURE (TFT) SENSOR INSPECTION) • Inspect related harness
			ATF temperature 60 °C {140 °F}	Approx. 0.7	
1G	K-LINE	PCM	Because this terminal is for serial communication, good/no good judgment by terminal voltage is not possible. Carry out inspection according to DTCs.	—	• Inspect related harness
1H	Cruise control switch	Cruise control switch	Cruise control switch ON	B+	• Inspect cruise control switch (See T–84 CRUISE CONTROL SWITCH INSPECTION) • Inspect related harness
			Cruise control switch OFF	0	
1I	Vehicle speed output	Instrument cluster	Vehicle speed at 10 km/h {6.2 mph} Voltmeter (+) → Terminal 1I Voltmeter (-) → Terminal 1C	Below 1.0	• Inspect Instrument cluster • Inspect related harness

Terminal	Signal	Connected to	Test Condition	Voltage (V)	Action
1J	—	—	—	—	—
1K	Intermediate sensor	Intermediate sensor	Vehicle stop	0	• Inspect Intermediate sensor (See K2–82 INTERMEDIATE SENSOR INSPECTION) • Inspect related harness
			Vehicle speed at 20 km/h {12.4 mph} or more	Above 1.0	
1M	VSS	VSS	Vehicle stop	0	• Inspect VSS (See K2–83 VEHICLE SPEEDOMETER SENSOR (VSS) INSPECTION) • Inspect related harness
			Vehicle speed at 20 km/h {12.4 mph} or more	Above 1.0	
1N	Input/turbine speed sensor	Input/turbine speed sensor	Vehicle stop	0	• Inspect Input/turbine speed sensor (See K2–81 INPUT/ TURBINE SPEED SENSOR INSPECTION) • Inspect related harness
			Vehicle speed at 20 km/h {12.4 mph} or more	Above 1.0	
1P	Back-up power supply	Battery	Constant	B+	• Inspect battery (See G–10 BATTERY INSPECTION) • Inspect related harness
1Q	Fail-safe	HOLD indicator light	DTC outputted	0-B+	• Inspect related harness
			other	0	
1S	—	—	—	—	—
1T	TR switch (N position)	TR switch	N position	B+	• Inspect TR switch (See K2–76 TRANSAXLE RANGE (TR) SWITCH INSPECTION) • Inspect related harness
			Other positions, all ranges	0	
1U	Brake switch	Brake switch	Brake pedal depressed	B+	• Inspect Brake switch (See Section P.) • Inspect related harness
			Brake pedal released	0	
1V	VSS (GND)	VSS	Constant	Below 1.0	• Inspect related harness
1W	TR switch (R range)	TR switch	R range	B+	• Inspect TR switch (See K2–76 TRANSAXLE RANGE (TR) SWITCH INSPECTION) • Inspect related harness
			Other ranges, all positions	0	
1X	Intermediate sensor (GND)	Intermediate sensor	Constant	Below 1.0	• Inspect Intermediate sensor (See K2–82 INTERMEDIATE SENSOR INSPECTION) • Inspect related harness
1Y	GND	GND	Constant	Below 1.0	• Inspect related harness
1Z	TR switch (D range)	TR switch	D range	B+	• Inspect TR switch (See K2–76 TRANSAXLE RANGE (TR) SWITCH INSPECTION) • Inspect related harness
			Other ranges, all positions	0	
1AA	TR switch (S range)	TR switch	S range	B+	• Inspect TR switch (See K2–76 TRANSAXLE RANGE (TR) SWITCH INSPECTION) • Inspect related harness
			Other ranges, all positions	0	
2A	—	—	—	—	—

Terminal	Signal	Connected to	Test Condition	Voltage (V)	Action
2B	TR switch (P position)	TR switch	P position	B+	• Inspect TR switch (See K2–76 TRANSAXLE RANGE (TR) SWITCH INSPECTION) • Inspect related harness
			Other positions, all ranges	0	
2C	TR switch (L range)	TR switch	L range	B+	• Inspect TR switch (See K2–76 TRANSAXLE RANGE (TR) SWITCH INSPECTION) • Inspect related harness
			Other ranges, all positions	0	
2D	Neutral shift solenoid valve	Neutral shift solenoid valve	N position	0	• Inspect neutral shift solenoid valve (See K2–84 SOLENOID VALVE INSPECTION) • Inspect related harness
			R position	B+	
2E	—	—	—	—	—
2F	Input/turbine speed sensor (GND)	Input/turbine speed sensor	Constant	0	• Inspect Input/turbine speed sensor (See K2–81 INPUT/ TURBINE SPEED SENSOR INSPECTION) • Inspect related harness
2G	Reduction timing solenoid valve	Reduction timing solenoid valve	N position	0	• Inspect reduction timing solenoid valve (See K2–84 SOLENOID VALVE INSPECTION) • Inspect related harness
			D range	B+	
2H	—	—	—	—	—
2I	HOLD switch	HOLD switch	Switch depressed	B+	• Inspect HOLD switch (See K2–75 HOLD SWITCH INSPECTION) • Inspect related harness
			Switch released	0	
2J	CAN L	PCM	Because this terminal is for serial communication, good/no good judgment by terminal voltage is not possible. Carry out inspection according to DTCs.	—	• Inspect related harness
2K	—	—	—	—	—
2M	CAN H	PCM	Because this terminal is for serial communication, good/no good judgment by terminal voltage is not possible. Carry out inspection according to DTCs.	—	• Inspect related harness
2N	—	—	—	—	—
2P	GND return (solenoid ground)	Solenoid valve	Constant	Continuity	• Inspect related harness
2Q	—	—	—	—	—
2S	TCC solenoid valve control	TCC solenoid valve	D range TCC ON (60 km/h {37 mph} or more)	B+	• Inspect TCC solenoid valve (See K2–84 SOLENOID VALVE INSPECTION) • Inspect related harness
			TCC released (D range HOLD switch ON)	0	

Terminal	Signal	Connected to	Test Condition	Voltage (V)	Action
2T	Shift solenoid B control	Shift solenoid B	N position	B+	• Inspect shift solenoid B (See K2–84 SOLENOID VALVE INSPECTION) • Inspect related harness
			D range, 4GR gear	0	
2U	High clutch solenoid valve	High clutch solenoid valve	N position	0	• Inspect high clutch duty solenoid valve (See K2–84 SOLENOID VALVE INSPECTION) • Inspect related harness
			When shifting 1-2 in D range	B+	
2V	2-4 Brake solenoid valve	2-4 Brake duty solenoid valve	N position	B+	• Inspect 2-4 Brake solenoid valve (See K2–84 SOLENOID VALVE INSPECTION) • Inspect related harness
			D position stall	0	
2W	Shift solenoid A	Shift solenoid A	N position	B+	• Inspect shift solenoid A (See K2–84 SOLENOID VALVE INSPECTION) • Inspect related harness
			D range, 3GR gear	0	
2X	Shift solenoid C control	Shift solenoid C	N position	B+	• Inspect shift solenoid C (See K2–84 SOLENOID VALVE INSPECTION) • Inspect related harness
			D range, HOLD switch OFF	0	
2Y	Pressure control solenoid control	Pressure control solenoid	N position	B+	• Inspect pressure control solenoid (See K2–84 SOLENOID VALVE INSPECTION) • Inspect related harness
			D position stall	0	
2Z	Power supply	Main relay	Ignition switch ON	B+	• Inspect main relay (See T–28 Relay Type) • Inspect related harness
			Ignition switch OFF	0	
2AA	Power supply	Main relay	Ignition switch ON	B+	• Inspect main relay (See T–28 Relay Type) • Inspect related harness
			Ignition switch OFF	0	

Inspection Using An Oscilloscope (Reference)
Input/turbine speed sensor signal

- TCM terminal: 1N (+)—2F (–)
- Oscilloscope setting: 1 V/DIV (Y) 1 ms/DIV (X)
- Measuring condition: Turbine speed at 700 rpm, N position

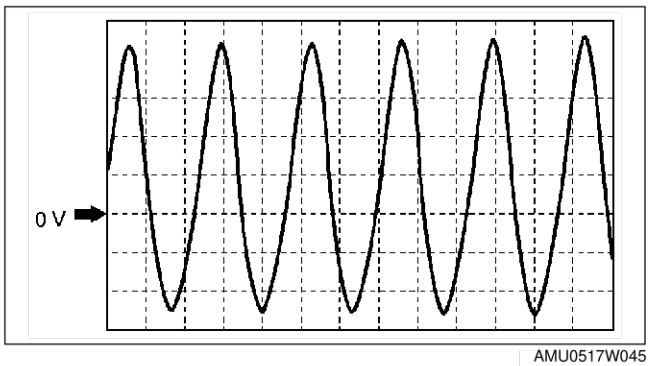

AMU0517W045

Intermediate sensor signal

- TCM terminal: 1K (+)—1X (–)
- Oscilloscope setting: 4 V/DIV (Y) 0.2 ms/DIV (X)
- Measuring condition: Vehicle speed at 40 km/h {25 mph}, 4GR

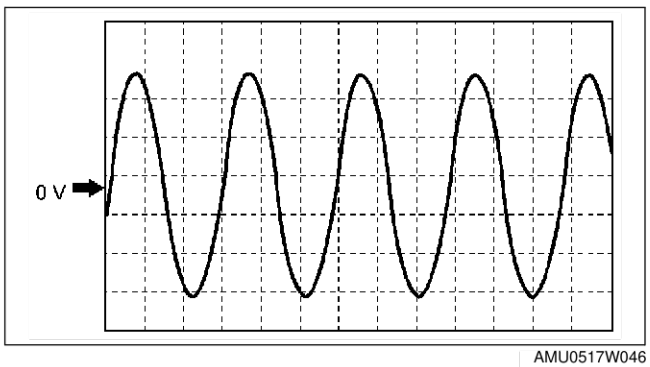

AMU0517W046

Vehicle speedometer sensor signal
- TCM terminal: 1M (+)—1V (–)
- Oscilloscope setting: 4 V/DIV (Y) 1 ms/DIV (X)
- Measuring condition: Vehicle speed at 40 km/h {25 mph}

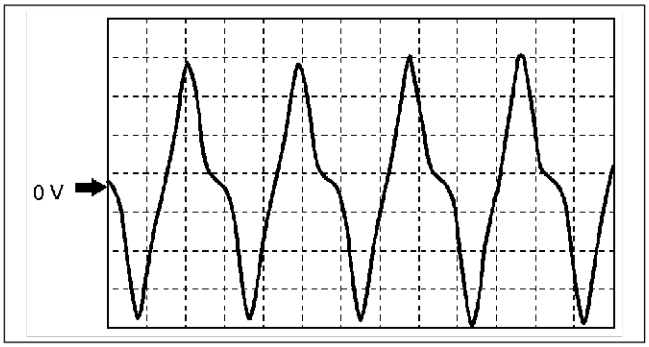

AMU0517W047

Pressure control solenoid signal
- TCM terminal: 2Y (+)—2P (–)
- Oscilloscope setting: 5 V/DIV (Y) 5 ms/DIV (X)
- Measuring condition: Idle after warm-up

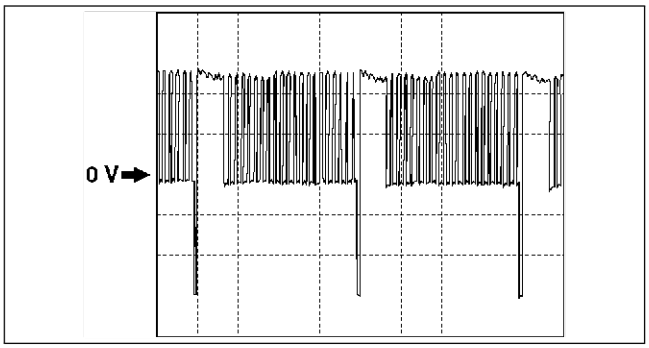

AMU0517W060

2-4 brake solenoid valve signal
- TCM terminal: 2V (+)—2P (–)
- Oscilloscope setting: 5 V/DIV (Y) 5 ms/DIV (X)
- Measuring condition: Idle after warm-up

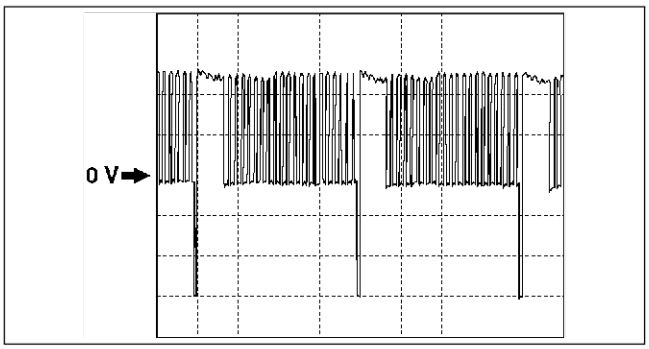

AMU0517W060

High clutch solenoid valve signal
- TCM terminal: 2U (+)—2P (–)
- Oscilloscope setting: 5 V/DIV (Y) 5 ms/DIV (X)
- Measuring condition: Idle after warm-up

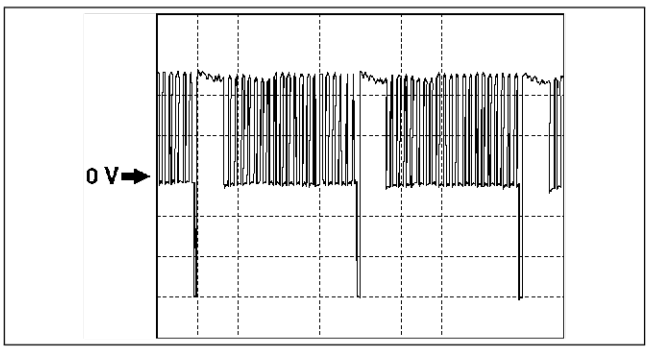

AMU0517W060

TCC solenoid valve signal (lock up off)

- TCM terminal: 2S (+)—2P (–)
- Oscilloscope setting: 5 V/DIV (Y) 5 ms/DIV (X)
- Measuring condition: Idle after warm-up

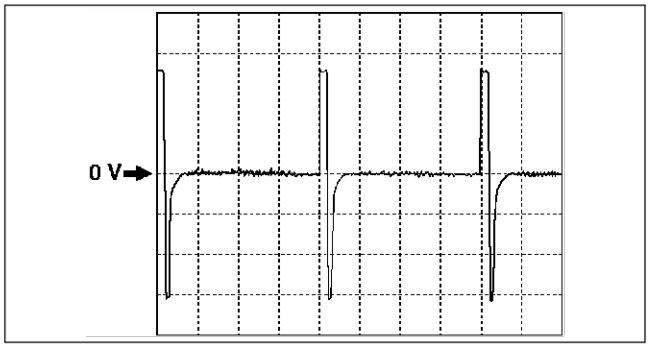

AMU0517W058

TCC solenoid valve signal (lock up on)

- TCM terminal: 2S (+)—2P (–)
- Oscilloscope setting: 5 V/DIV (Y) 5 ms/DIV (X)
- Measuring condition: Drive the vehicle with lock up

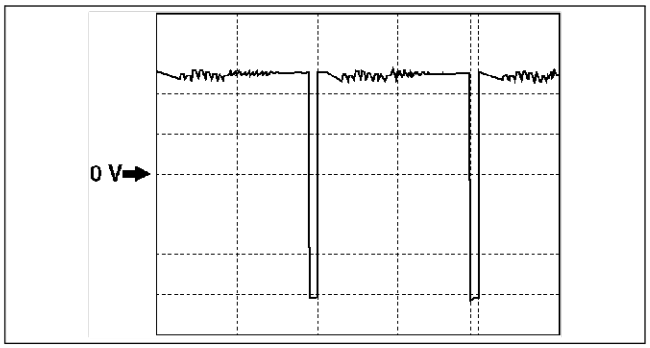

AMU0517W059

End Of Sie

TCM REMOVAL/INSTALLATION

AME571418901W12

1. Disconnect the negative battery cable.
2. Remove the floor mat of passenger seat.
3. Disconnect the negative battery cable.
4. Remove in the order indicated in the table.
5. Install in the reverse order of removal.
6. Install the floor mat of passenger seat.
7. Connect the negative battery cable.

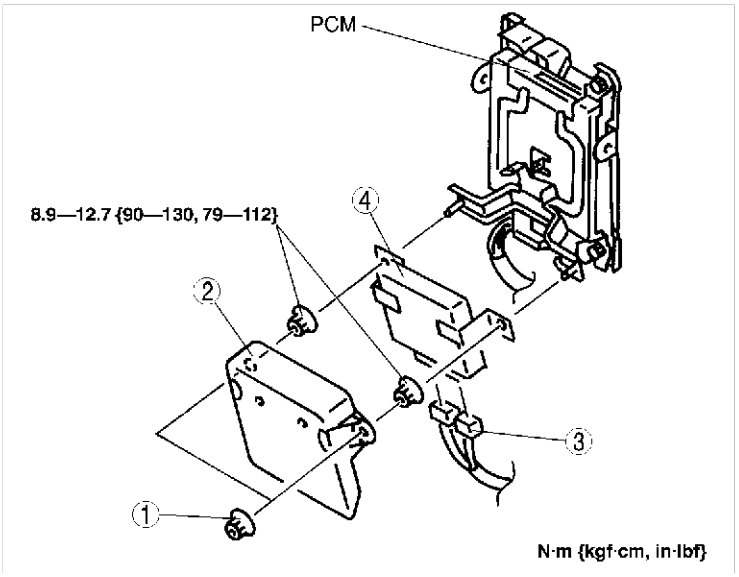

AMU0517W043

1	Frange cap nut
2	TCM panel

3	TCM connector
4	TCM

AUTOMATIC TRANSAXLE REMOVAL/INSTALLATION

AME571419090W01

The oil pan could contain small chips, shavings, and other particles helpful in checking the condition of the transaxle and diagnosing certain problems.
To ensure that all foreign particles stay in the oil pan, make sure that the transaxle is never tipped completely over while the oil pan is still installed.

1. Disconnect the negative battery cable.
2. Drain the ATF into a container. (See K2–75 AUTOMATIC TRANSAXLE FLUID (ATF) REPLACEMENT.)
3. Remove the battery, battery tray, and battery carrier. (See G–9 BATTERY REMOVAL/INSTALLATION.)
4. Remove the air cleaner component. (See F4–60 INTAKE-AIR SYSTEM REMOVAL/INSTALLATION.)
5. Remove the front wheel and tire.
6. Remove the splash shield.
7. Remove the starter.
8. Remove in the order indicated in the table.
9. After removal, remove the oil pan to inspect the condition of the transaxle.
10. Install in the reverse order of removal.
11. Install the starter.
12. Install the splash shield.
13. Install the wheel and tire.
14. Install the air cleaner component. (See F4–60 INTAKE-AIR SYSTEM REMOVAL/INSTALLATION.)
15. Install the battery carrier, and battery. (See G–9 BATTERY REMOVAL/INSTALLATION.)
16. Fill the transaxle with the specified ATF after installation. (See K2–75 AUTOMATIC TRANSAXLE FLUID (ATF) REPLACEMENT.)
17. Inspect for leakage of ATF from all connecting points.
18. Connect the negative battery cable.
19. Inspect the operation of the TR switch. (See K2–76 TRANSAXLE RANGE (TR) SWITCH INSPECTION.)
20. Inspect the operation of the selector lever. (See K2–112 SELECTOR LEVER INSPECTION.)
21. Carry out the mechanical system test. (See K2–67 MECHANICAL SYSTEM TEST.)

Service item	Test item		
	Line pressure test	Stall speed test	Time lag test
Automatic transaxle replacement	❍		
Automatic transaxle overhaul	❍	❍	❍
Torque converter replacement	❍	❍	
Oil pump replacement	❍		
Clutch system replacement	❍		❍
Differential replacement	❍		

22. Carry out the road test. (See K2–70 ROAD TEST.)

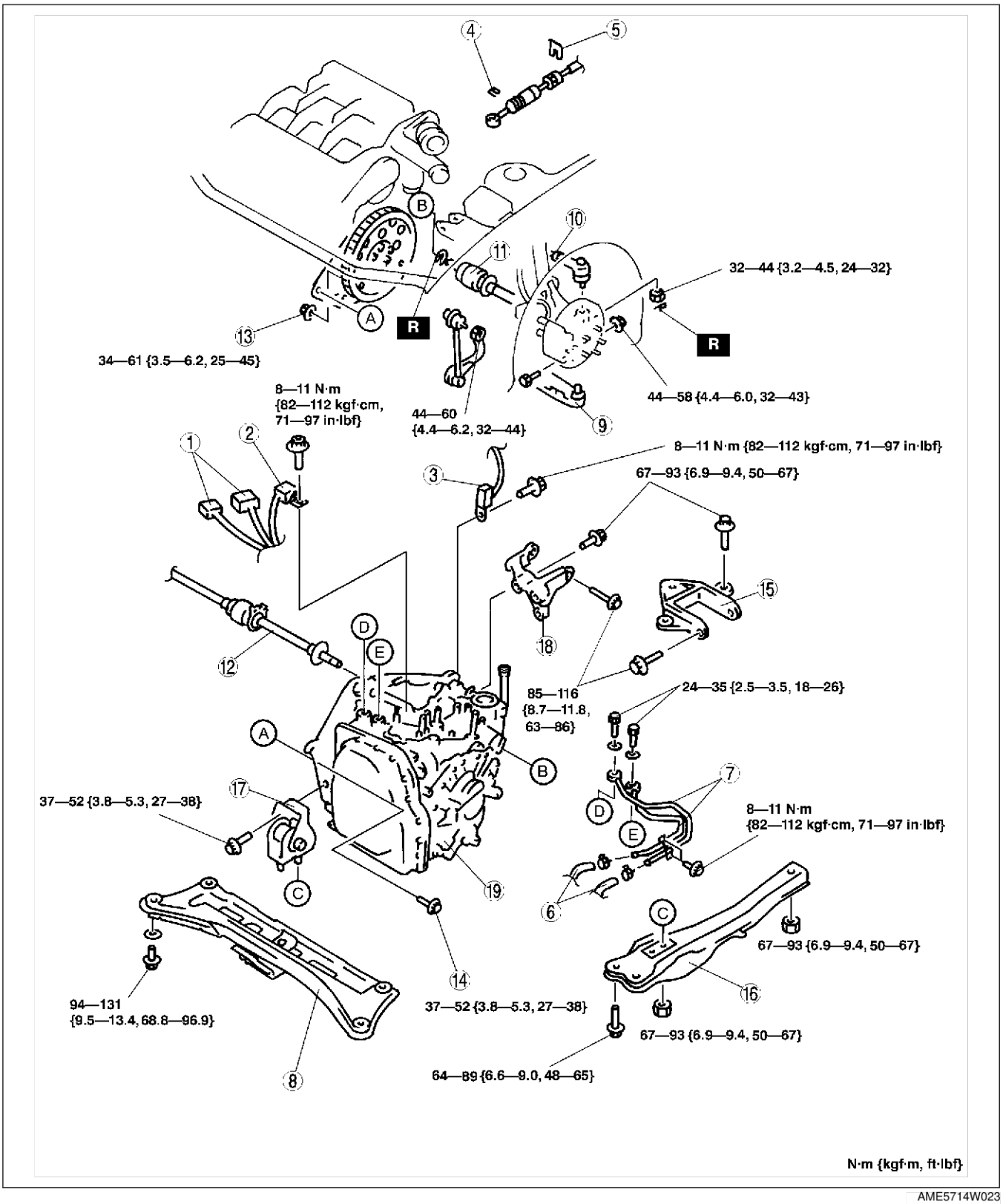

AME5714W023

1	Terminal component No.1, No.2
2	TR switch connector
3	GND harness
4	Spring (See K2–100 Spring Installation Note)
5	Clip
6	Oil hose
7	Oil pipe

8	Transverse member
9	Lower arm
10	Tie-rod end (See Section N)
11	Drive shaft (See M–20 DRIVE SHAFT (AJ) REMOVAL/ INSTALLATION)

12	Joint shaft (See M–7 JOINT SHAFT (AJ) REMOVAL/ INSTALLATION)
13	Torque converter nut (See K2–99 Torque Converter Nuts Installation Note)
14	Transaxle mounting bolt (upper side)
15	No.4 engine mount bracket (See K2–97 No.4 Engine Mount Bracket Removal Note)
16	Engine mount member (See K2–97 Engine Mount Member Removal Note) (See K2–99 Engine Mount Member Installation Note)
17	No.2 engine mount
18	No.1 engine mount (See K2–99 No.1 Engine Mount Installation Note)
19	Transaxle (See K2–98 Transaxle Removal Note) (See K2–98 Transaxle Installation Note)

No.4 Engine Mount Bracket Removal Note

1. Remove the windshield wiper link.
2. Remove the windshield wiper motor.
3. Remove the intake manifold.(R.H.D. models)
4. Install the engine hanger to intake manifold.(R.H.D. models)
5. Install the intake manifold.(R.H.D. models)
6. Support the engine using the **SSTs** .
7. Remove the No.4 engine mount bracket.

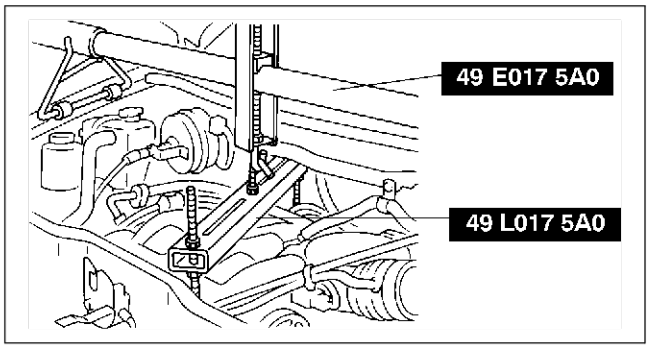

YMU517WB0

Engine Mount Member Removal Note

1. Support the engine on the jack.

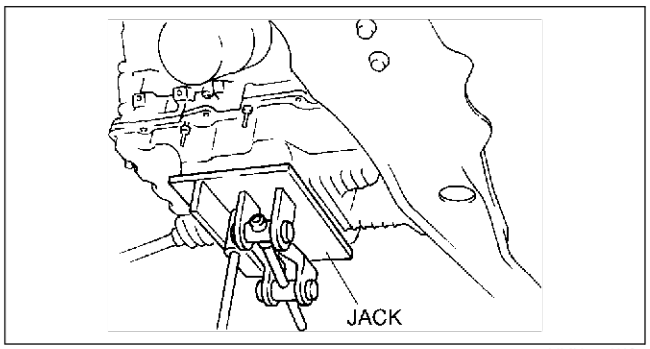

YMU517WC0

Transaxle Removal Note

1. Loosen the **SSTs** (engine support) and lean the engine toward the transaxle.

   Warning
   - **Verify that the transaxle is securely supported by the jack. If the transaxle falls, serious injury or death and damage to the vehicle could result. Before removing the transaxle make sure that the jack is securely supporting it.**

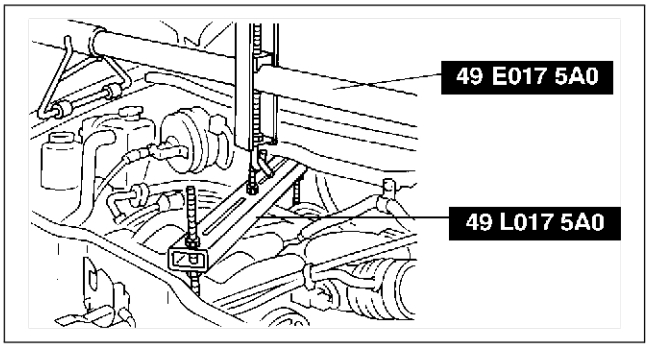

YMU517WB0

2. Support the transaxle on a jack.
3. Remove the transaxle mounting bolts.
4. Remove the transaxle.

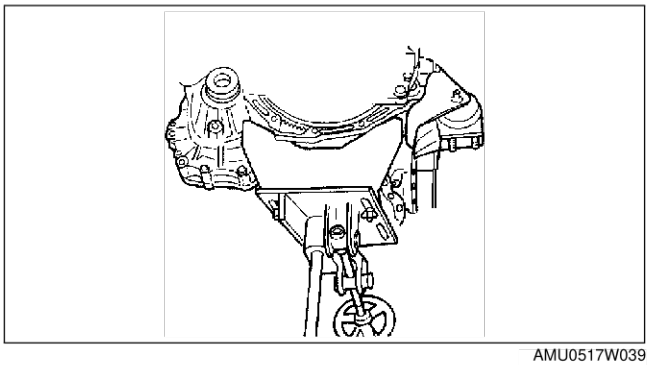

AMU0517W039

Transaxle Installation Note

Warning
- **Verify that the transaxle is securely supported by the jack. If the transaxle should falls, serious injury or death and damage to the vehicle could result. Before removing the transaxle make sure that the jack is securely supporting it.**

1. Set the transaxle on a jack and lift it into place.

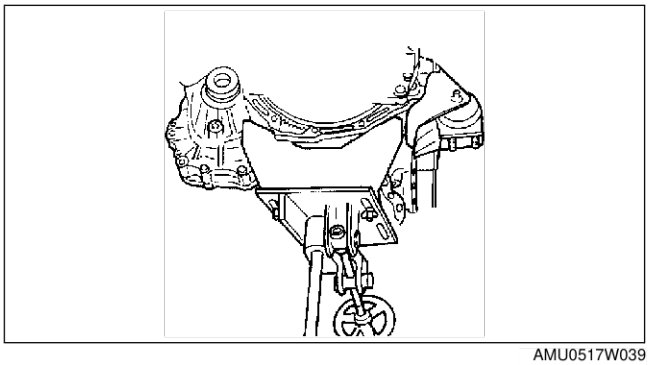

AMU0517W039

2. Install the transaxle mounting bolts.

   Tightening torque
   37—52 N·m {3.8—5.3 kgf·m, 28—38 ft·lbf}

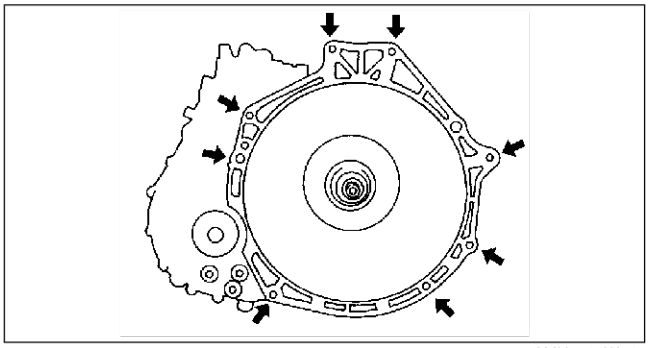

AMU0517W041

No.1 Engine Mount Installation Note

Caution
- **Align the transaxle bolt holes and the engine mount exactly. Any misalignment can result in bolts and bolt holes becoming damaged or stripped during installation.**

1. Use the **SSTs** (engine support) to make sure the transaxle bolt holes and No.1 engine mount align.
2. Tighten the bolts to the specified torque.

Engine Mount Member Installation Note

1. Position the direction indicator on engine mount member bushings facing toward the front side, and install the bushings onto the engine mount member.
2. To install the engine mount member, put the No.2 engine mount stud bolts through the engine mount member installation holes.

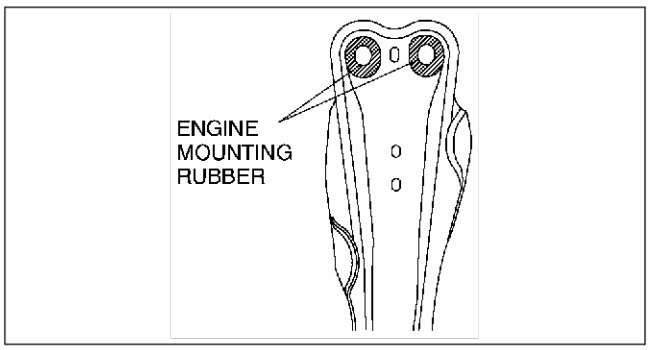

AMU0517W048

3. Install the engine mount member bolts A and nuts A.

Tightening torque
A: 64—89 N·m {6.6—9.0 kgf·m, 48—65 ft·lbf}

4. Loosely tighten the No.2 engine mount nuts B and C.
5. Remove the **SSTs** (engine support).
6. Tighten the No.2 engine mount nuts B and C.

Tightening torque
B: 67—93 N·m {6.9—9.4 kgf·m, 50—67 ft·lbf}
C: 85—116 N·m
{8.7—11.9 kgf·m, 63—85 ft·lbf}

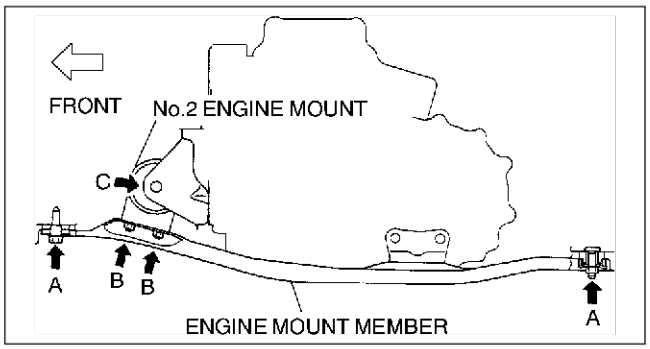

AMU0517W061

Torque Converter Nuts Installation Note

1. Align the holes by turning torque converter.
2. Insert a screwdriver from the starter installation hole, and lock the drive plate.

Caution
- **Loosely and equally tighten the torque converter nuts, then further tighten them to the specified tightening torque.**

3. Tighten the torque converter mounting nuts.

Tightening torque
34—61 N·m {3.5—6.2 kgf·m, 25—45 ft·lbf}

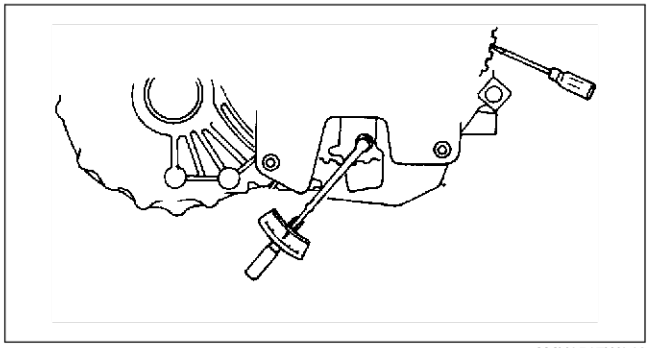
AMU0517W042

K2

Spring Installation Note

1. Install the selector lever to the manual shaft lever in such a way that the selector cable does not bear a load.

   Note
   - Install the selector lever to the manual shaft lever with the spring side of the selector cable end facing the upward of the vehicle.

2. Confirm that the end of the manual shaft lever sticks out of the end of the selector cable.

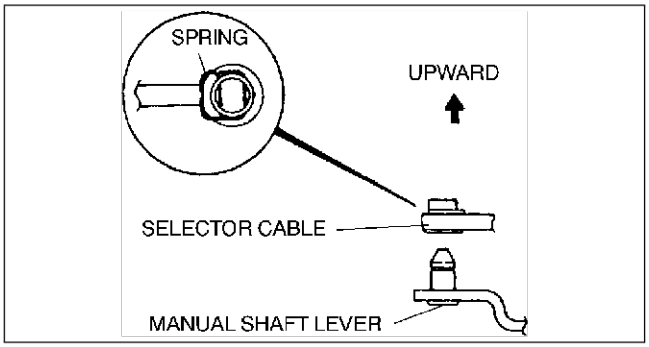

YMU517WAL

End Of Sie

OIL SEAL REMOVAL/INSTALLATION

AME571419240W01

1. Drain the ATF. (See K2–75 AUTOMATIC TRANSAXLE FLUID (ATF) REPLACEMENT.)
2. Remove the drive shaft and joint shaft. (See M–7 JOINT SHAFT (AJ) REMOVAL/INSTALLATION.) (See M–20 DRIVE SHAFT (AJ) REMOVAL/INSTALLATION.)
3. Remove and discard the oil seal using a screwdriver.
4. Using the **SSTs** and a hammer, tap a new oil seal in evenly until the **SSTs** contacts the transaxle case.
5. Coast the lip of the oil seal with ATF.

   Caution
   - **The oil seal is easily damaged by the sharp edges of the drive shaft splines. Do not let the splines contact the oil seal.**

6. Install the drive shaft and joint shaft. (See M–7 JOINT SHAFT (AJ) REMOVAL/INSTALLATION.) (See M–20 DRIVE SHAFT (AJ) REMOVAL/INSTALLATION.)
7. Add ATF to the specified level. (See K2–75 AUTOMATIC TRANSAXLE FLUID (ATF) REPLACEMENT.)
8. Carry out the mechanical system test. (See K2–67 MECHANICAL SYSTEM TEST.)

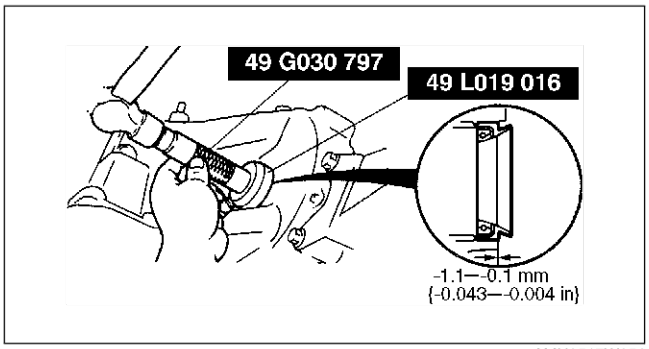

AMU0517W056

End Of Sie

CONTROL VALVE BODY REMOVAL/INSTALLATION

AME571421100W02

On-Vehicle Removal

Warning
- **Hot transaxle and ATF can cause severe burns. Turn off the engine and wait until it ATF have cooled before removing the control valve body.**
- **Using compressed air can cause dirt and other particles to fly out, causing injury to the eyes. Wear protective eyes whenever using compressed air.**

Caution
- **Clean the transaxle exterior throughly with a stream cleaner or cleaning solvents before removal.**
- **If any old sealant gets into the transaxle during installation of the oil pan, trouble may occur in the transaxle case and oil pan. Clean with cleaning fluids.**

1. Clean the transaxle exterior thoroughly with a steam cleaner or cleaning solvents.
2. Disconnect the negative battery cable.
3. Remove the battery, battery tray, and battery carrier.
4. Remove the air cleaner component.
5. Drain the ATF into separate containers.
6. Remove the splash shield.
7. Remove the oil hose and oil pipe. (See K2–102 OIL COOLER REMOVAL/INSTALLATION.)
8. Remove the heater pipe bracket . (See U–8 HEATER PIPE AND HOSE COMPONENT REMOVAL/INSTALLATION.)

9. Remove the control valve body cover.
10. Disconnect the solenoid valve connectors, then remove harness clips.
11. Remove the control valve body.

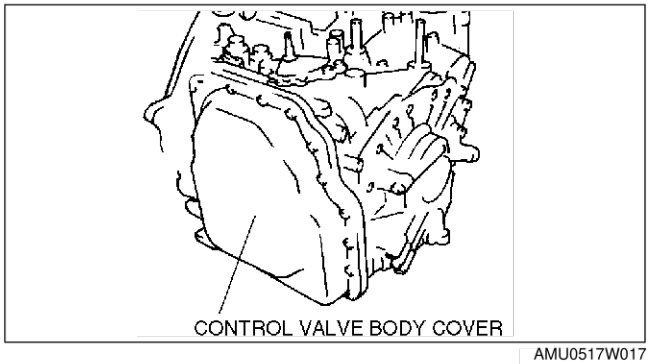

AMU0517W017

On-Vehicle Installation

1. Position the manual valve so that it protrudes from the control valve body end by 3.0 mm.
2. Install the control valve body while holding the manual valve in the position.

Tightening torque
6.9—8.8 N·m
{0.70—0.90 kgf·m, 5.1—6.5 ft·lbf}

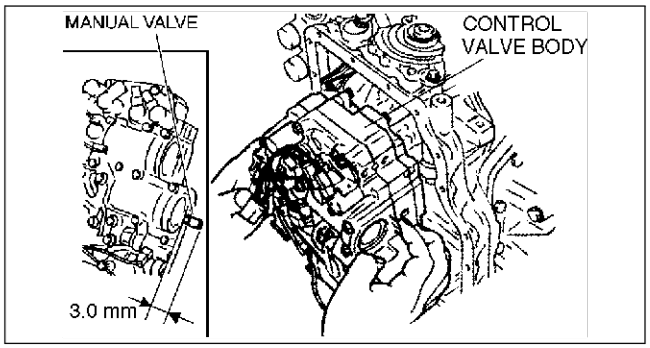

AMU0517W018

3. Connect the solenoid connectors, then install harness clips.
4. Apply a light coat of silicon sealant to the contact surfaces of the control valve body cover and transaxle case.
5. Install the control valve body cover.

Tightening torque
6.9—8.8 N·m
{0.70—0.90 kgf·m, 5.1—6.5 ft·lbf}

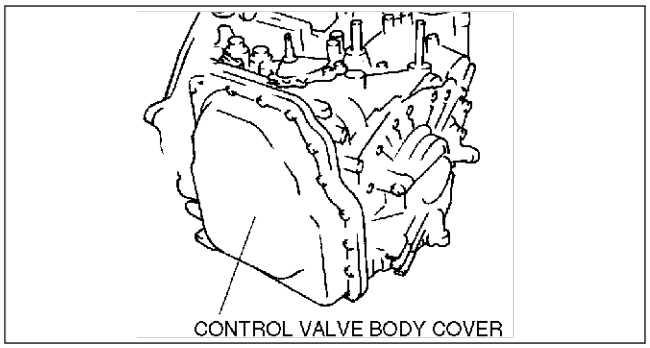

AMU0517W017

6. Install the heater pipe bracket . (See U–8 HEATER PIPE AND HOSE COMPONENT REMOVAL/INSTALLATION.)
7. Install the oil hose and oil pipe. (See K2–102 OIL COOLER REMOVAL/INSTALLATION.)
8. Install the splash shield.
9. Install the air cleaner component.
10. Install the battery carrier, battery tray, and battery.
11. Connect the negative battery cable.
12. Fill the transaxle with the specified ATF. (See K2–75 AUTOMATIC TRANSAXLE FLUID (ATF) REPLACEMENT.)
13. Inspect for leakage of ATF from the oil pan or the oil hose connecting points.
14. Carry out the mechanical system test. (See K2–67 MECHANICAL SYSTEM TEST.)
15. Carry out the road test. (See K2–70 ROAD TEST.)

End Of Sie

OIL COOLER FLUSHING

AME571419900W02

Caution

- **Power flushing should be performed very carefully when removing the accumulated debris from the fluid baffle, otherwise the debris cannot be removed or the problem becomes even worse.**

Note

- The contaminated cooler line (oil pipes and hoses) and auxiliary cooler (if equipped) must be flushed completely when ATX is overhauled or replaced.
- Performing back and reverse power flushing two times each does not work because debris or particles flow out from the feed pipe side of ATX.

Recommended power-flushing manufacturer

Manufacturer	Part number	Description
Kent Moore	J35944-AMAZ	Flushing kit or equivalent
OTC	60081	Portable torque converter, oil cooler cleaner or equivalent

Power Flushing
Repair procedure

1. Before power flushing, inspect the hoses/lines and clamps. Power flushing must begin with back flushing followed by forward flushing to quickly dislodge the restriction. If back flushing is not performed before forward flushing, the restriction could further reduce the ATF flow through the internal mesh type baffle of the cooler and flushing will not be effective or possible.

Inspecting oil lines & clamps

1. Be sure to inspect the lines (hoses/pipes) for cuts, crimps (pinched), cracks or any other damage before reusing them. If any problem exists replace it.

Caution
- **Always use new clamps when replacing hoses.**

Back flushing

1. Using the power flushing equipment manufacturer's instructions, connect equipment so the flushing fluid flows in the opposite direction of normal fluid flow.
2. Flush oil cooler/lines until discharge fluid is clean.

Caution
- **If the cooler can not be properly flushed using recommended equipment, send the radiator out for sublet cleaning or replace.**

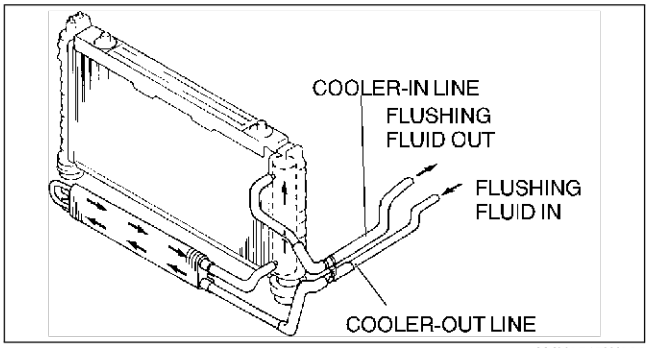

AMU0517W020

Forward flushing

1. Connect power flushing equipment so the flushing fluid flows in the direction of normal fluid flow.
2. Flush oil cooler/lines until discharge fluid is clean.

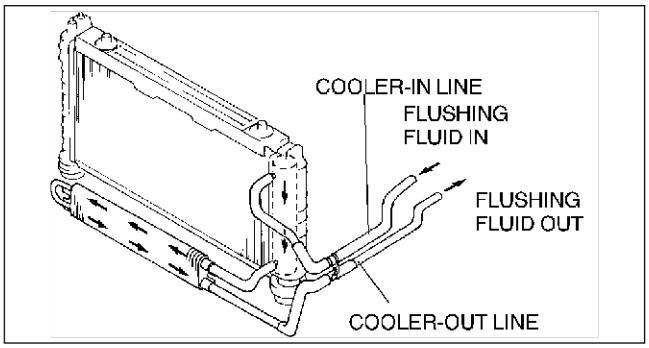

AMU0517W021

End Of Sie

OIL COOLER REMOVAL/INSTALLATION

AME571419900W03

1. Disconnect the negative battery cable.
2. Drain the coolant into a container. (See E–10 ENGINE COOLANT REPLACEMENT.)
3. Drain the ATF into a container. (See K2–75 AUTOMATIC TRANSAXLE FLUID (ATF) REPLACEMENT.)
4. Remove the battery, battery tray, and battery tray bracket.
5. Remove the air cleaner component. (See F4–60 INTAKE-AIR SYSTEM REMOVAL/INSTALLATION.)
6. Remove the radiator grille.
7. Remove the front bumper.
8. Remove the splash shield.
9. Remove the mud guard.
10. Remove in the order indicated in the table.
11. Install in the reverse order of removal.
12. Add ATF to the specified level. (See K2–75 AUTOMATIC TRANSAXLE FLUID (ATF) REPLACEMENT.)
13. Add coolant to the specified level. (See E–10 ENGINE COOLANT REPLACEMENT.)
14. Connect the negative battery cable.
15. Inspect for oil leakage from the oil pipes and oil hoses.
16. Inspect for coolant from the hoses.
17. Inspect the ATF level and condition. (See K2–74 AUTOMATIC TRANSAXLE FLUID (ATF) INSPECTION.)
18. Carry out the line pressure test. (See K2–67 Line Pressure Test.)

19. Carry out the road test. (See K2–70 ROAD TEST.)

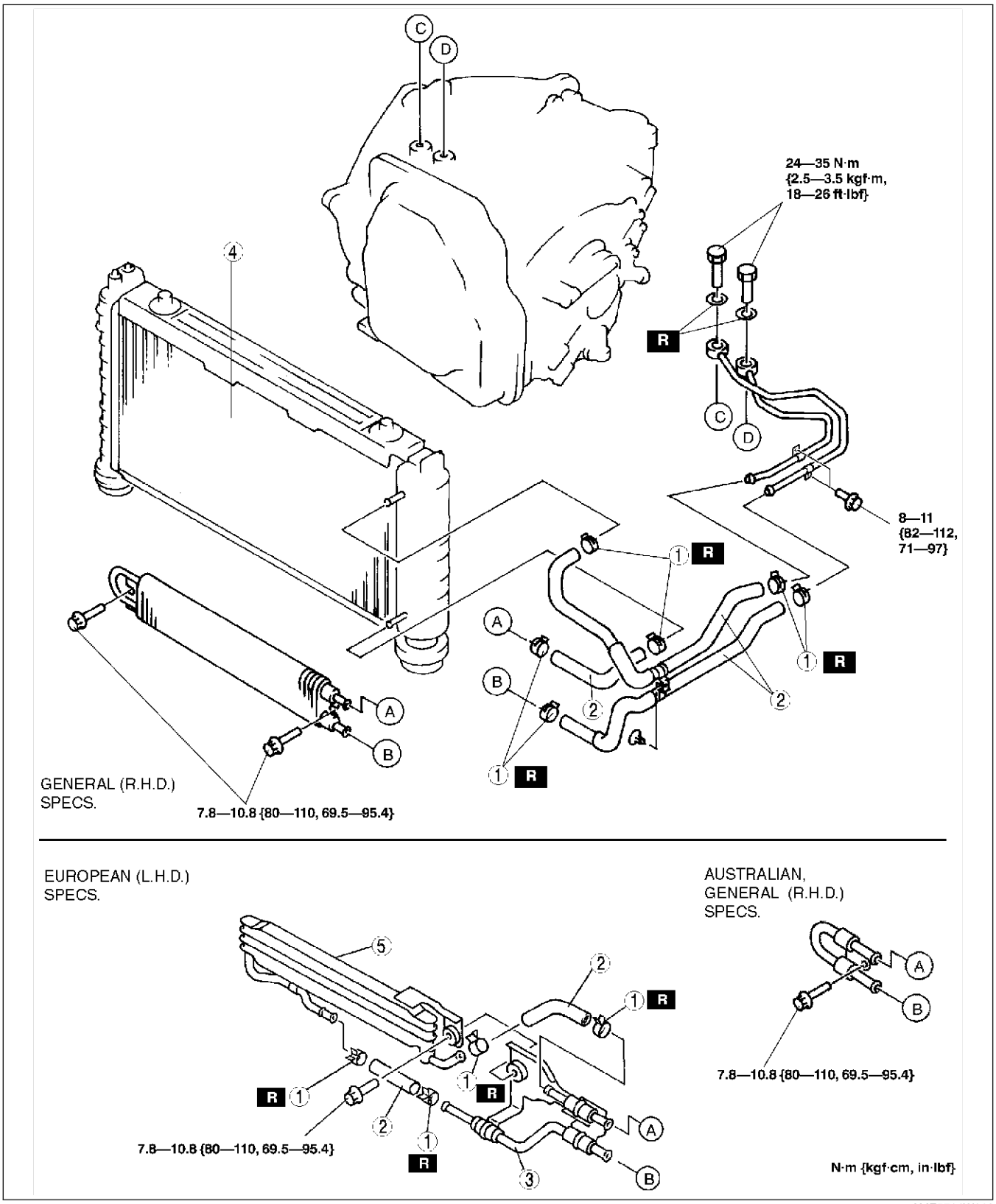

AME5714W018

1	Hose clamp
2	Oil hose (See K2–104 Oil Hose Installation Note)
3	Oil pipe

4	Radiator (in tank oil cooler) (See K2–104 Radiator (In Tank Oil Cooler) Installation Note)
5	Oil cooler

Radiator (In Tank Oil Cooler) Installation Note

1. The automatic transaxle oil cooler flushing must be performed whenever a transaxle is removed for service because the existing fluid may be contaminated, and to prevent contamination of new fluid. The flushing must be performed after installation of the overhauled or replaced transaxle.
2. Follow the instructions in the manufacturer's publication for flushing operation.

Oil Hose Installation Note

1. Apply compressed air to cooler-side opening, and blow any remaining grime and foreign material from the cooler pipes. Compressed air should be applied for no **less than one minute**.

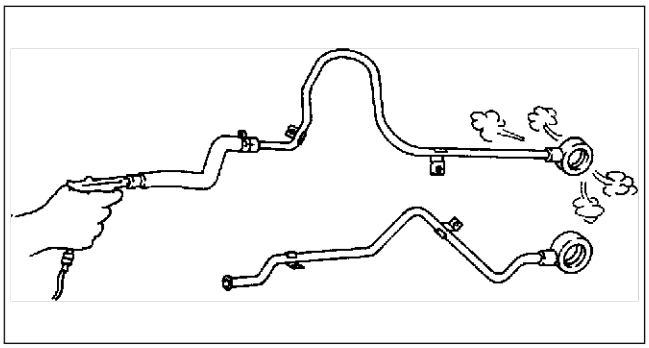

W6U517WF7

2. Align the marks, and slide the oil hose onto the oil pipe until it is fully seated as shown.

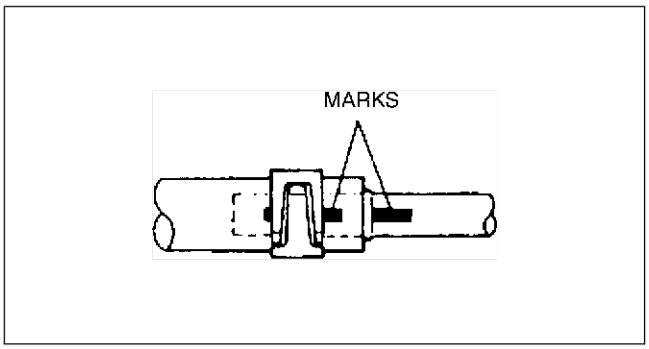

X3U517WC2

3. Install the hose clamp onto the hose. If reusing the hose, install the new hose clamp exactly on the mark left by the previous hose clamp.
4. Verify that the hose clamp does not interfere with any other components.

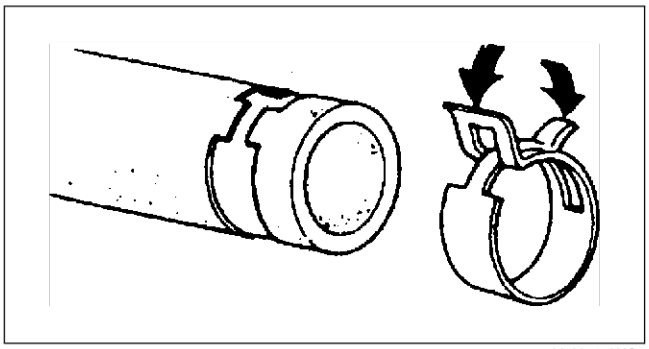

X3U517WC3

End Of Sie

OIL COOLER DISASSEMBLY/ASSEMBLY

AME571419900W04

1. Disassemble in the order indicated in the table.
2. Assemble in the reverse order of disassembly.

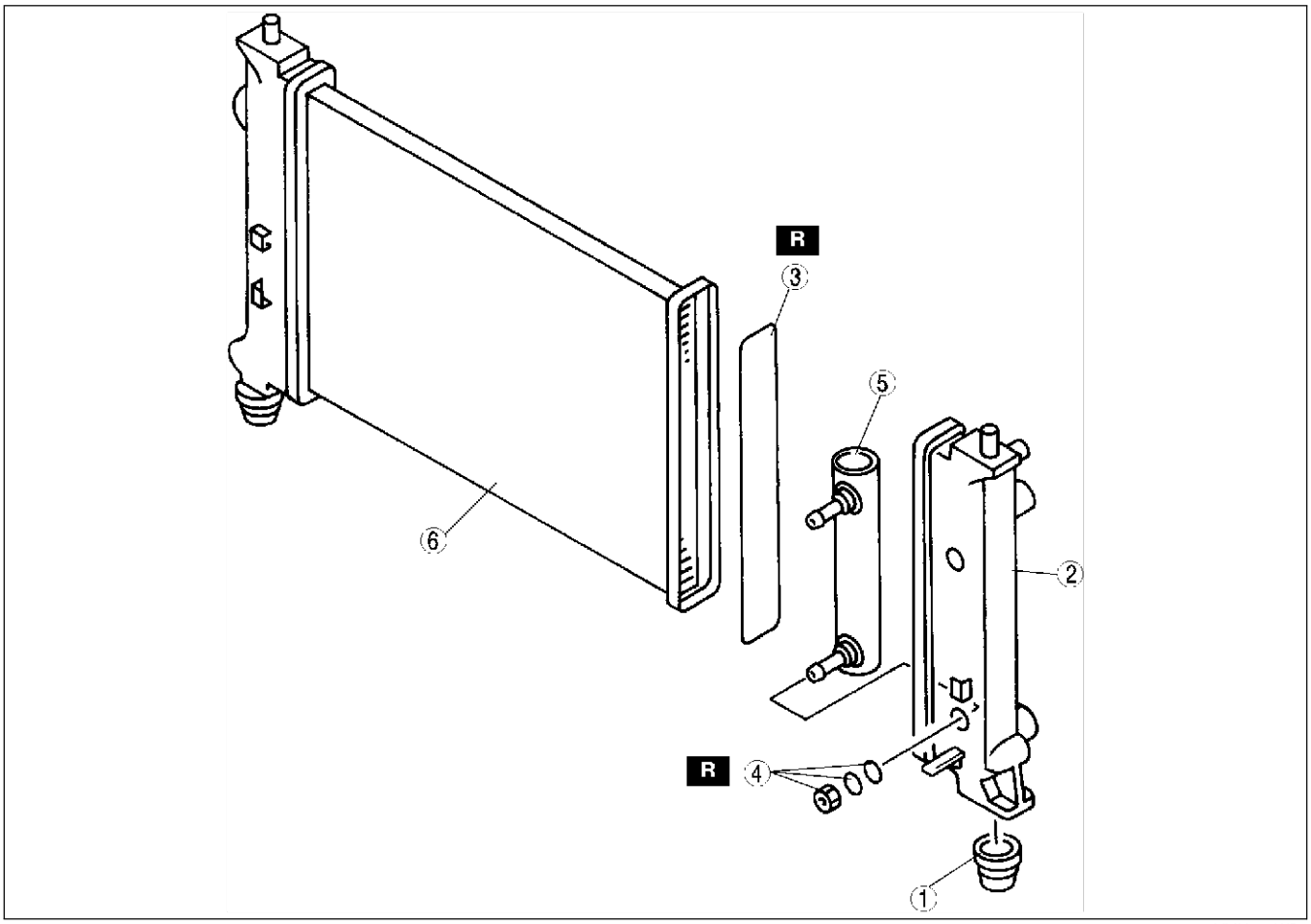

YMU517WB9

1	Mount rubber
2	Radiator outer tank (in tank oil cooler) (See K2–105 Radiator Outer Tank (In Tank Oil Cooler) Removal Note) (See K2–106 Radiator Outer Tank (In Tank Oil Cooler) Installation Note)
3	O-ring

4	Nut set
5	ATF cooler
6	Radiator

K2

Radiator Outer Tank (In Tank Oil Cooler) Removal Note

1. Inspect the height of the header tabs.
2. Insert the end of a medium tip screwdriver between the end of the header tab and the outer tank.

Note

- Do not open more tabs than necessary for tank removal.

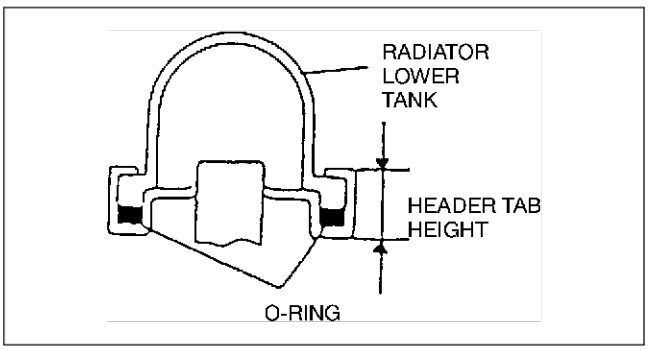

X3U517WC5

3. Pivot the screwdriver to pry the tab away from the tank and repeat the procedure for each tab.
4. Remove the radiator outer tank and O-ring (gasket) from the core header when all of the tabs are opened.

Note
- If any header tabs are missing from the core, replace the radiator.

5. Inspect the gasket surface of the radiator core header to ensure it is clean and free of foreign material or damage.
6. Inspect the radiator outer tank for warping. If it is warped, replace radiator tank.

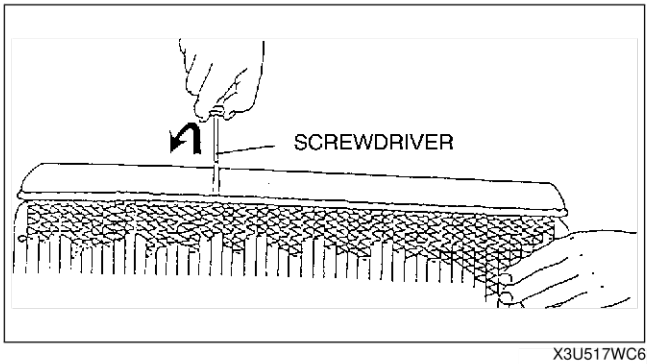

X3U517WC6

Radiator Outer Tank (In Tank Oil Cooler) Installation Note

1. Install a new O-ring and ensure it is not twisted.

Note
- The old O-ring must be replaced.

2. Position the radiator tank in the original direction to the core using care not to scratch the tank sealing surface with the header tabs.

Note
- Step 3 will set jaw opening to the correct specification.

3. With the jaws of locking-type pliers (vise grips) closed and locked, turn the adjusting screw to position the jaws against the drill bit with the diameter measured (height) in removal procedure 1. Tighten the lock nut on the adjusting screw against the handle to lock the adjustment in place.

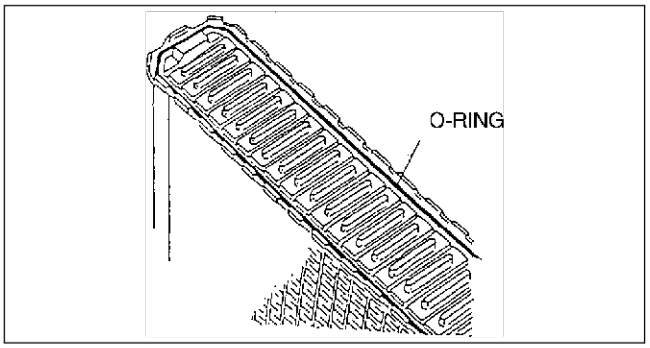

X3U517WC7

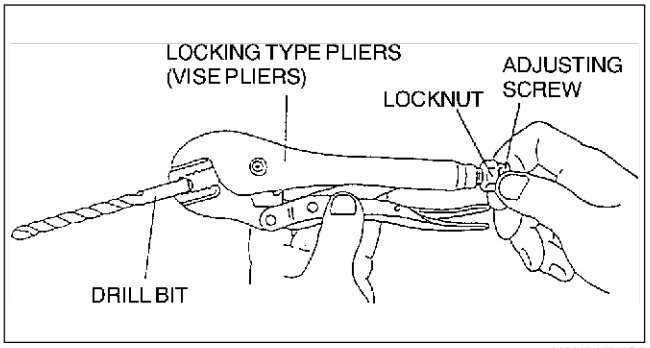

X3U517WC8

4. Squeeze the header tabs down in order as shown against the lip of radiator outer tank base with locking-type pliers while rotating the pliers toward the tank.

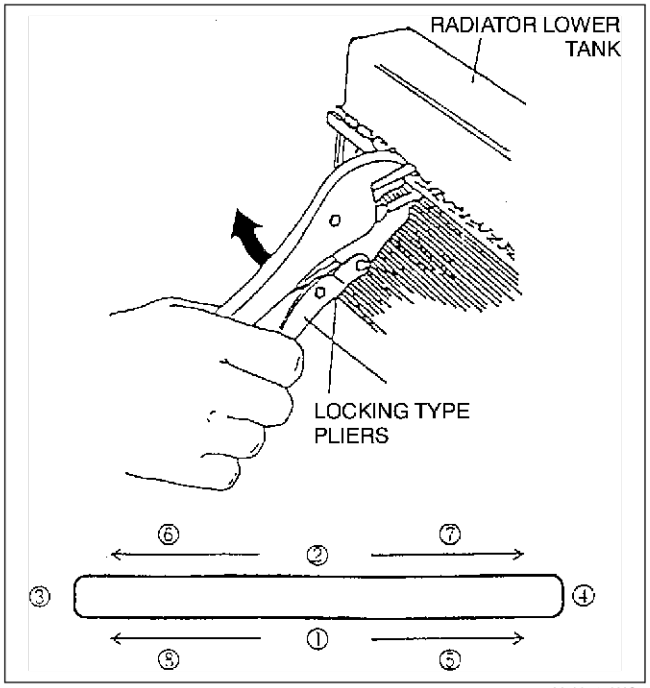

X3U517WC9

5. Verify the height of the header tabs is same as the height before removal.
6. Inspect for the leakage of radiator according to the following procedure.
   (1) Cover the radiator inlet and outlet.
   (2) Cover the ATF cooler inlet and outlet.
   (3) Connect a radiator tester.

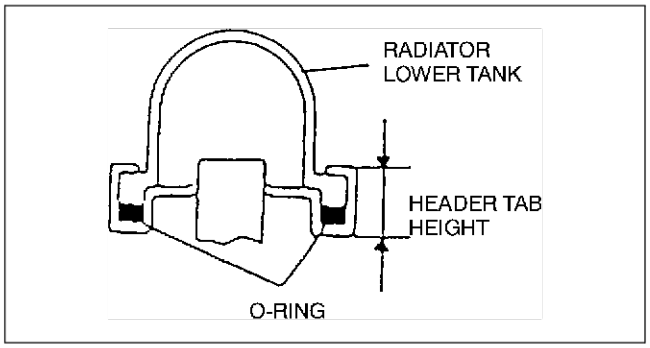

X3U517WCA

   (4) Apply pressure of. **145 kPa {1.5 kgf/m^2, 21 psi}** and verify that the pressure is held.

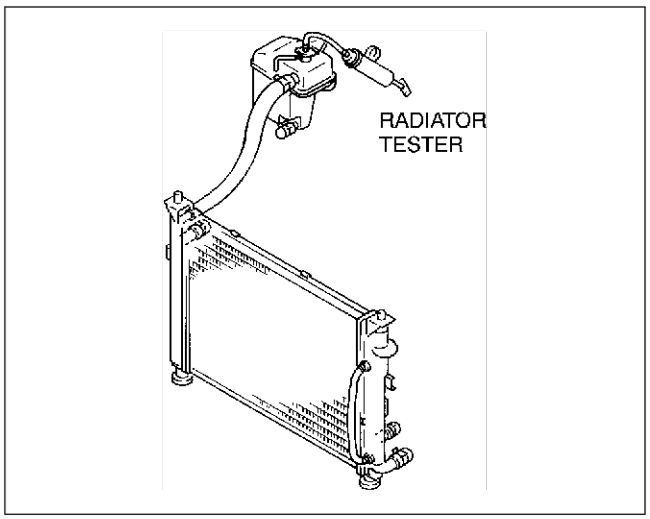

YMU517WBA

(5) Put the radiator into water slowly with the radiator tester connected.
(6) Inspect for air leakage.

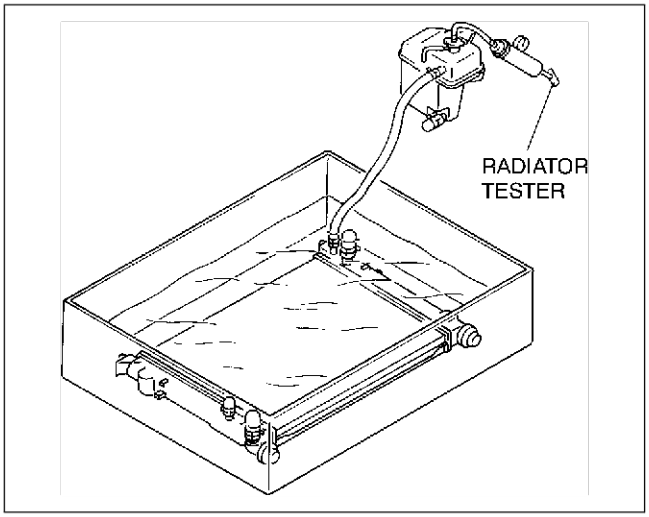

YMU517WBB

End Of Sie

DRIVE PLATE REMOVAL/INSTALLATION

AME571419020W01

1. Remove in the order indicated in the table.
2. Install in the reverse order of removal.

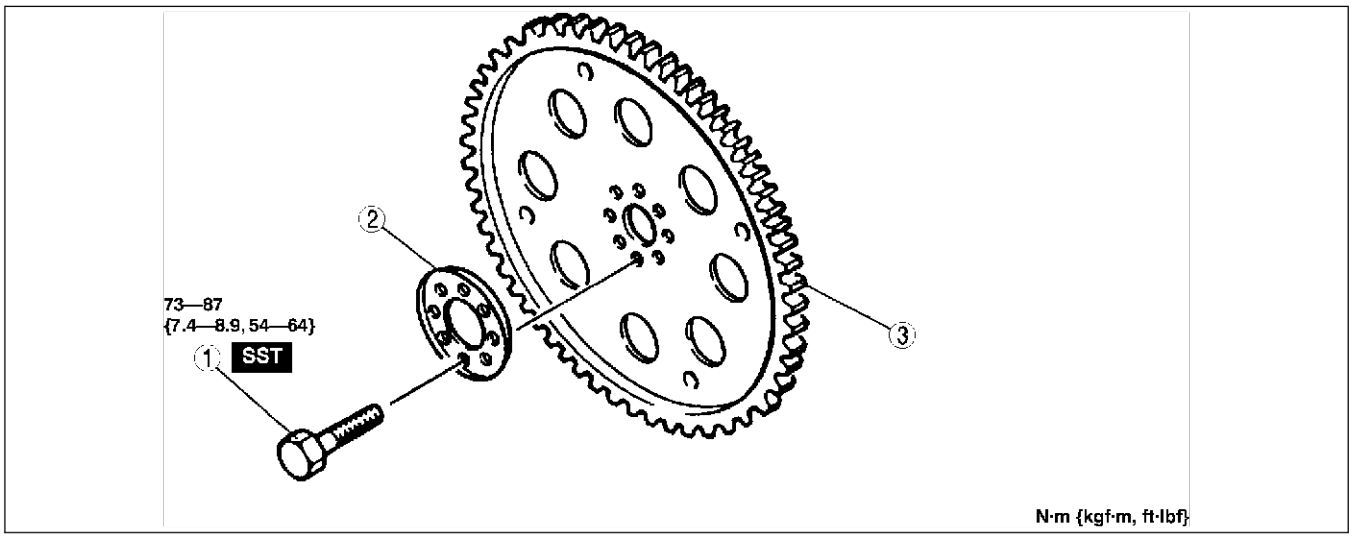

YMU517WBC

1	Drive plate mounting bolts (See K2–108 Drive Plate Mounting Bolts Removal Note) (See K2–109 Drive Plate Mounting Bolts Installation Note)

2	Backing plate
3	Drive plate

Drive Plate Mounting Bolts Removal Note

1. Set the **SST** or equivalent against the drive plate.
2. Remove the bolts and the drive plate.

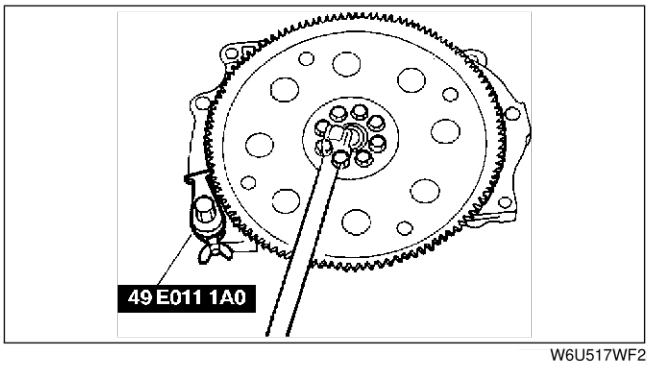

W6U517WF2

Drive Plate Mounting Bolts Installation Note

1. Set the **SST** or equivalent against the drive plate.
2. Tighten the drive plate mounting bolts in two or three steps in the order shown.

Tightening torque
73—87 N·m {7.4—8.9 kgf·m, 54—64 ft·lbf}

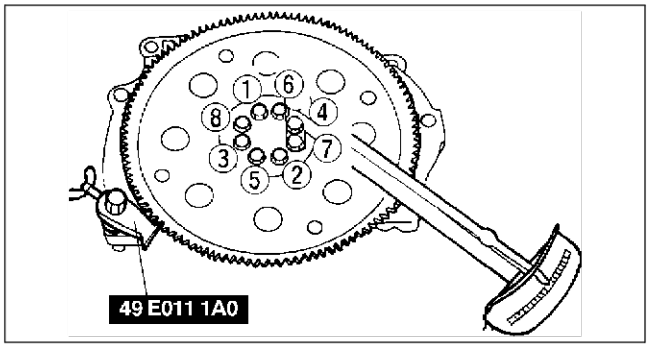

ZMU517WA7

End Of Sie

AUTOMATIC TRANSAXLE SHIFT MECHANISM

SHIFT-LOCK INSPECTION

AME571630000W01

1. Turn the ignition switch to ON position.
2. Verify that the selector lever is in P position.
3. Without the brake pedal depressed, verify that the selector lever cannot be shifted from P position.
4. Depress the brake pedal and verify that the selector lever can be shifted from P position.
   - If not as specified, inspect the P position switch continuity and/or shift-lock relay, shift-lock solenoid continuity.

End Of Sie

SHIFT-LOCK RELEASE LEVER INSPECTION

AME571630000W02

1. Turn the ignition switch to OFF position.
2. Verify that the selector lever is in P position.
3. Without the brake pedal depressed, verify that the selector lever cannot be shifted from P position.
4. Remove the cover.
5. Push down the shift-lock release lever using fingers.
6. Verify that the selector lever can be shifted from P position.
   - If not as specified, inspect and repair as necessary.

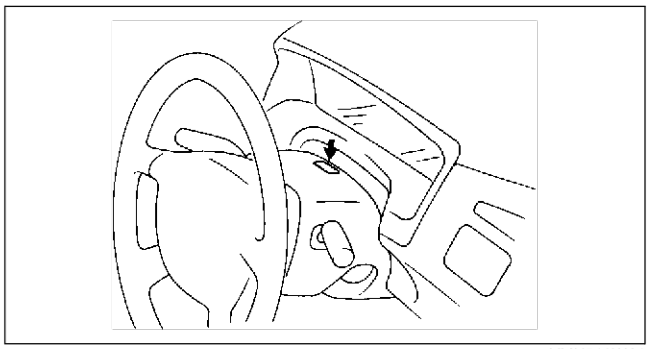

YMU518WA0

End Of Sie

KEY INTERLOCK INSPECTION

AME571609000W01

1. Turn the ignition switch to ON position.
2. Shift the selector lever to R position.
3. Verify that the ignition key cannot be turned to LOCK position.
4. Shift the selector lever to P position.
5. Verify that the ignition key can be turned to LOCK position.
   - If a malfunction is found, perform the instrument cluster input/output check mode. (See Section T.)

End Of Sie

KEY INTERLOCK SOLENOID INSPECTION

AME571609010W01

Continuity Inspection

1. Disconnect the negative battery cable.
2. Remove the column cover.
3. Disconnect the key interlock solenoid connector.
4. Inspect for continuity between terminals A and B.
   - If there is no continuity, replace the key cylinder.
5. Connect the key interlock solenoid connector.
6. Install the column cover.
7. Connect the negative battery cable.

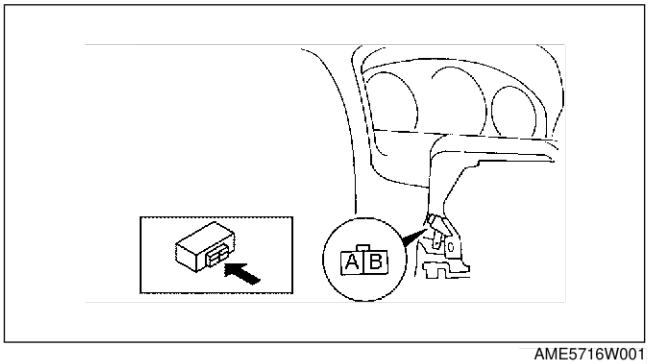

AME5716W001

End Of Sie

KEY INTERLOCK RESISTOR INSPECTION

AME5716676D1W01

Resistance Inspection

1. Disconnect the negative battery cable.
2. Disconnect the key interlock resistor connector.
3. Inspect for resistance between terminals A and B.
   - If not correct, replace the key interlock resistor. (See K2–110 KEY INTERLOCK RESISTOR REMOVAL/INSTALLATION.)

   Resistance
   6.65—7.35 ohms

4. Connect the key interlock resistor connector.
5. Connect the negative battery cable.

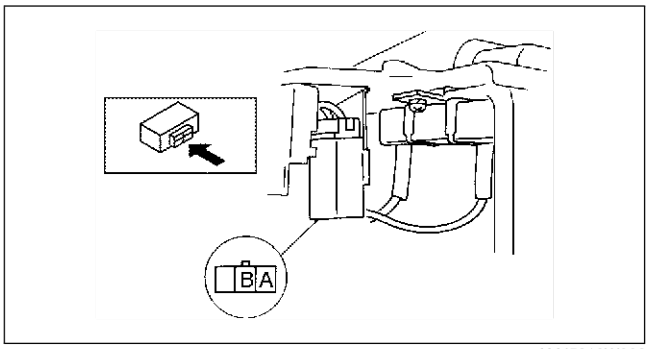

AMJ5816W002

End Of Sie

KEY INTERLOCK RESISTOR REMOVAL/INSTALLATION

AME5716676D1W02

1. Disconnect the negative battery cable.
2. Disconnect the key interlock resistor connector.
3. Remove the key interlock resistor.
4. Install the key interlock resistor.
5. Connect the key interlock resistor connector.
6. Connect the negative battery cable.

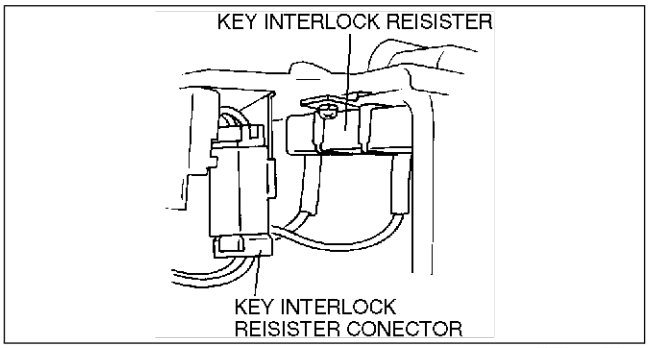

AMU0518W002

End Of Sie

P POSITION SWITCH (BUILT-IN SELECTOR LEVER) INSPECTION

AME571646420W01

Continuity Inspection

1. Disconnect the negative battery cable.
2. Remove the column cover.
3. Disconnect the connector.
4. Inspect the continuity.
   - If not as specified, replace selector lever. (See K2–113 SELECTOR LEVER REMOVAL/INSTALLATION.)

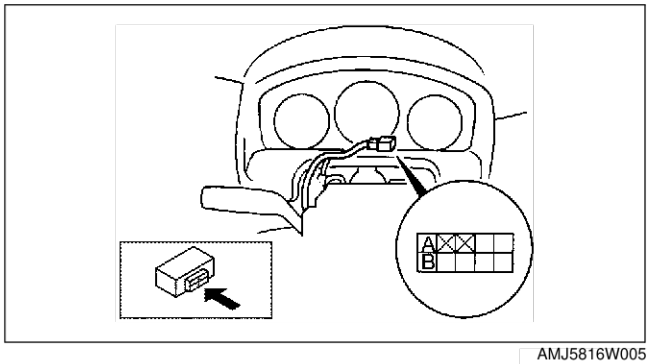

AMJ5816W005

○——○ : Continuity

Selector lever position	Terminal	
	A	B
P position		
Other position	○	○

YMU518WCA

5. Connect the connector.
6. Install the column cover.
7. Connect the negative battery cable.

End Of Ste

SHIFT-LOCK SOLENOID (BUILT-IN SELECTOR LEVER) INSPECTION

AME571646102W01

Continuity Inspection

1. Disconnect the negative battery cable.
2. Remove the column cover.
3. Disconnect the connector.
4. Inspect the continuity.
   - If there is no continuity, replace selector lever. (See K2–113 SELECTOR LEVER REMOVAL/INSTALLATION.)
5. Connect the connector.
6. Install the column cover.
7. Connect the negative battery cable.

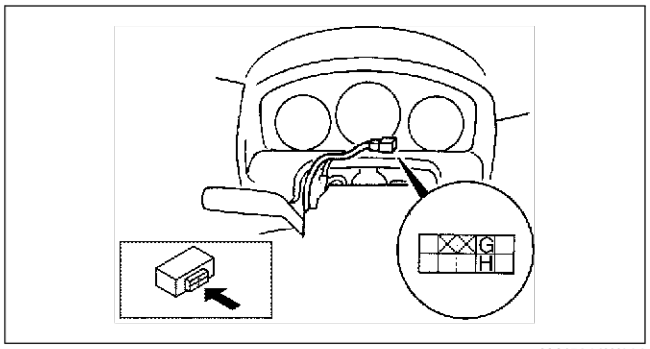

AMJ5816W006

End Of Ste

SHIFT-LOCK RELAY INSPECTION

AME571667730W01

1. Disconnect the negative battery cable.
2. Disconnect the shift-lock relay connector.
3. Inspect voltage and continuity between the shift-lock relay terminals.
   - If not as specified, replace the shift-lock relay. (See K2–112 SHIFT-LOCK RELAY REMOVAL/INSTALLATION.)

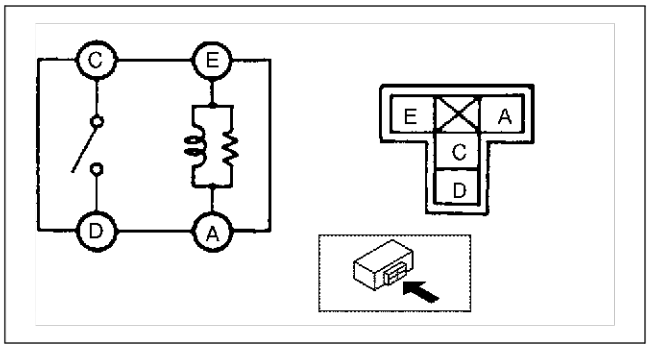

AMJ5816W008

○——○ : Continuity

Terminal			
E	A	C	D
○	○		
B+	GND	○	○

YMU518WA6

4. Connect the shift-lock relay connector.
5. Connect the negative battery cable.

End Of Ste

K2

SHIFT-LOCK RELAY REMOVAL/INSTALLATION

AME571667730W02

1. Disconnect the negative battery cable.
2. Disconnect the shift-lock relay connector.
3. Remove the shift-lock relay.
4. Install the shift-lock relay.
5. Connect the shift-lock relay connector.
6. Connect the negative battery cable.

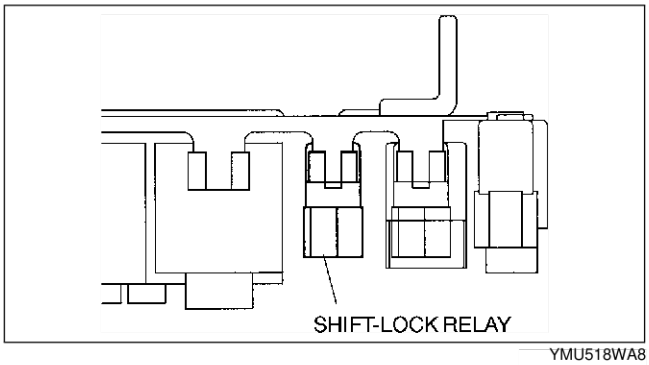

YMU518WA8

End Of Sie

SELECTOR LEVER INSPECTION

AME571646102W02

1. Turn the ignition switch to ON position.
2. With the brake pedal depressed, verify that there is a “click” at each range when shifted in the pattern shown.
3. Verify that the selector lever can only be shifted as shown.
4. Verify that the positions of the selector lever and the selector indicator light are aligned.
   - If not as specified, adjust the TR switch and/or selector cable. (See K2–79 TRANSAXLE RANGE (TR) SWITCH ADJUSTMENT.) (See K2–112 SELECTOR CABLE ADJUSTMENT.)
5. Verify that the vehicle operates in each selected range.

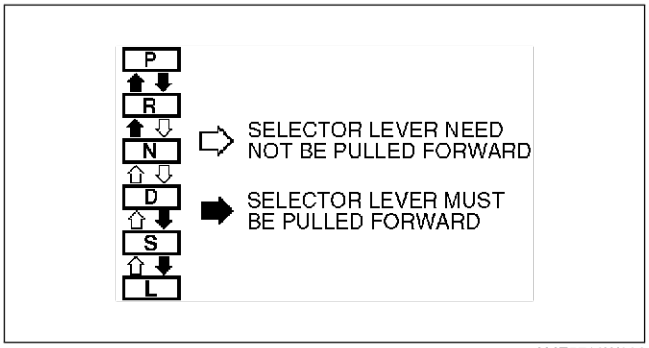

AME5716W002

End Of Sie

SELECTOR CABLE ADJUSTMENT

AME571646500W01

1. Remove the column cover.
2. Shift the selector lever to P position.
3. Loosen nut A shown in the figure.
4. Pull the selector lever to the R position side gate of P position, and tighten nut A.

   Tightening torque
   16—22 N·m {1.6—2.3 kgf·m, 12—16 ft·lbf}

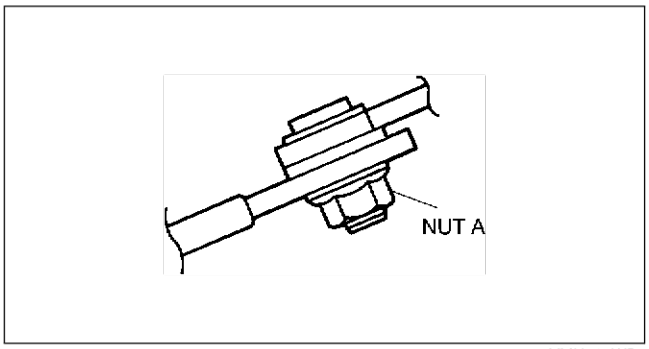

YMU518WB0

5. Verify that the selector lever bolt end is exposed from the nut.
6. Install the column cover.

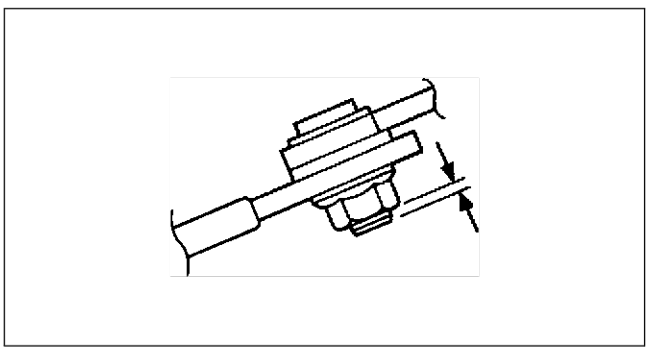

YMU518WAA

End Of Sie

SELECTOR LEVER REMOVAL/INSTALLATION

AME571646102W03

Warning

- **Handling the air bag module improperly can accidentally deploy the air bag module, which may seriously injure you. Read AIR BAG SYSTEM SERVICE WARNINGS before handling the air bag module. (See Section T.)**

1. Disconnect the negative battery cable.
2. Remove in the order indicated in the table.
3. Install in the reverse order of removal.
4. Inspect the shift-lock. (See K2–109 SHIFT-LOCK INSPECTION.)
5. Inspect the shift-lock release lever. (See K2–109 SHIFT-LOCK RELEASE LEVER INSPECTION.)
6. Inspect the key interlock system. (See K2–109 KEY INTERLOCK INSPECTION.)

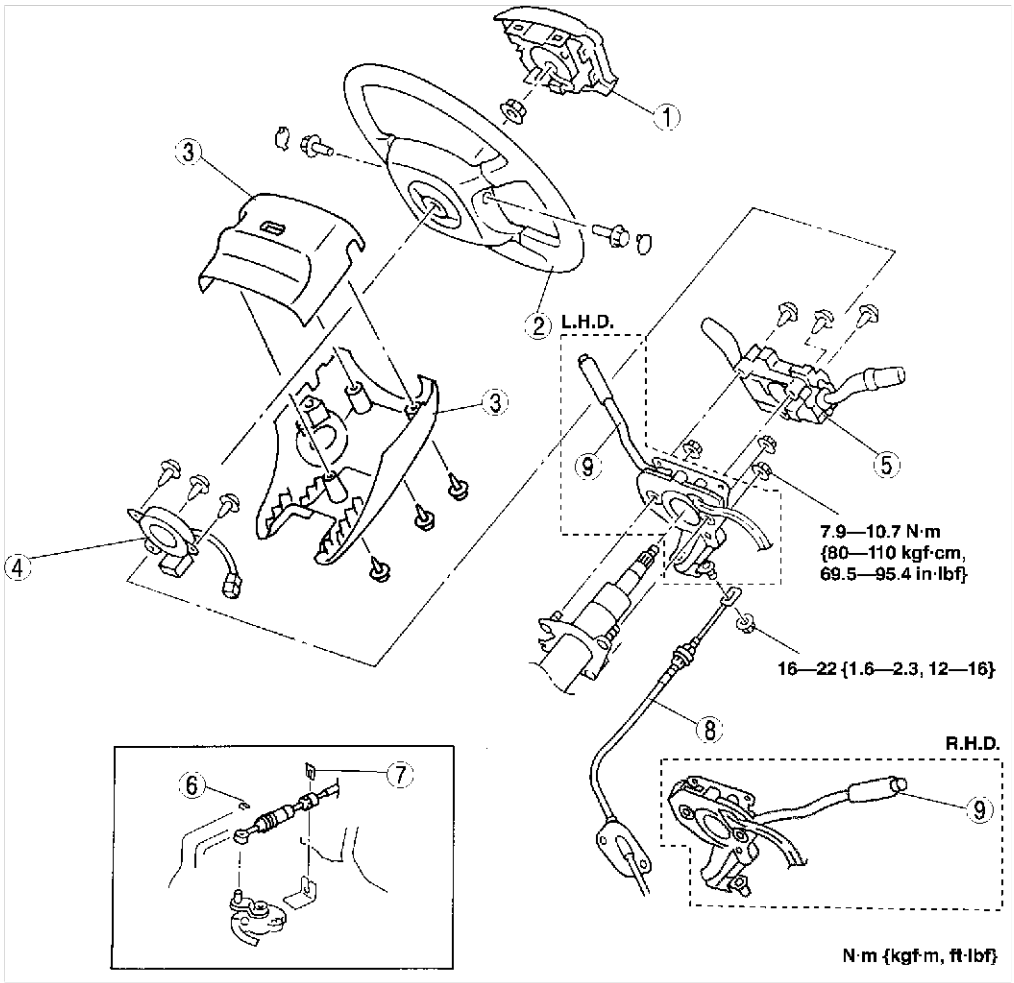

AME5716W003

1	Air bag module (See Section T)
2	Steering wheel (See Section T)
3	Column cover
4	Clock spring

5	Combination switch
6	Spring
7	Clip
8	Selector cable (See K2–114 Selector Cable Installation Note)
9	Selector lever

Selector Cable Installation Note

1. Shift the selector lever and manual shaft to P position.

Caution

- **Bending the selector cable as shown in the figure will damage the cable and cause it to become loose during shifting. When handling and installing the selector cable, hold it straight.**

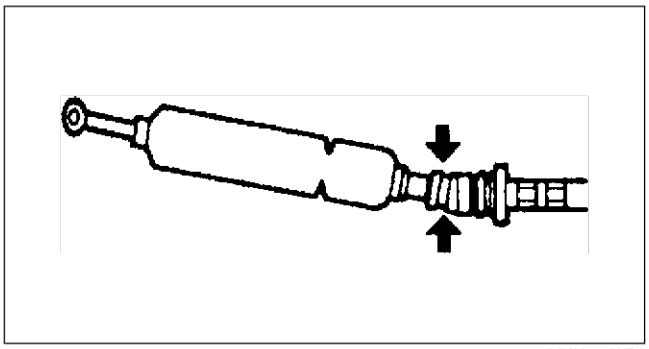

YMU518WB1

2. Install the selector cable to the manual shaft lever so that the spring side of the selector cable end faces upward.
3. Install the selector cable to the bracket securely.
4. Install the selector cable to the steering shaft bracket securely.
5. Install the selector cable to the selector lever bolt.

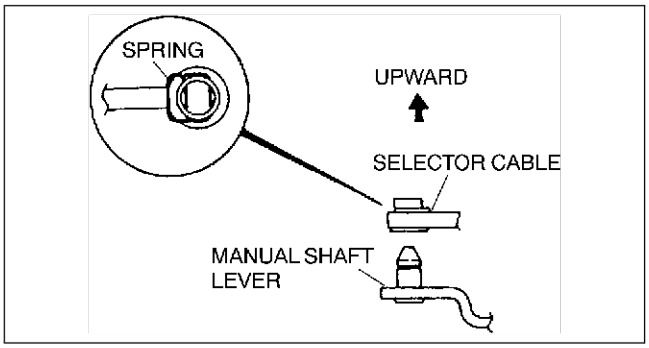

YMU518WAD

6. Install nut A onto the selector lever bolt temporarily.
7. Pull the selector lever to the R position side gate of P position, and tighten nut A.

Tightening torque
16—22 N·m {1.6—2.3 kgf·m, 12—16 ft·lbf}

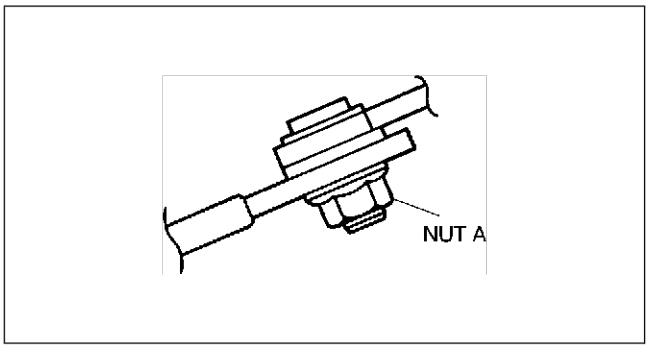

YMU518WAE

8. Verify that the selector lever bolt end is exposed from the nut.

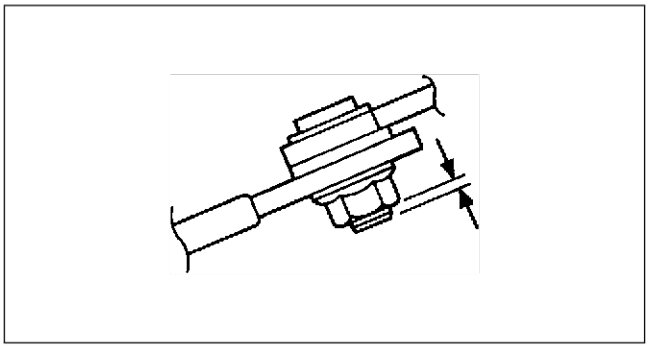

YMU518WAA

End Of Sie

ON-BOARD DIAGNOSTIC

FOREWORD

AME577018901W01

- When the customer reports vehicle malfunction, check the malfunction indicator lamp (MIL) indication, HOLD lamp flash, and diagnostic trouble code (DTC), then diagnose the malfunction according to following flowchart.
  - — If the DTC exists, diagnose the applicable DTC inspection. (See K2–118 DTC TABLE.)
  - — If the DTC does not exist, the MIL does not illuminate and the HOLD lamp flashes, diagnose the applicable symptom troubleshooting. (See K2–182 AUTOMATIC TRANSAXLE SYMPTOM TROUBLESHOOTING.)

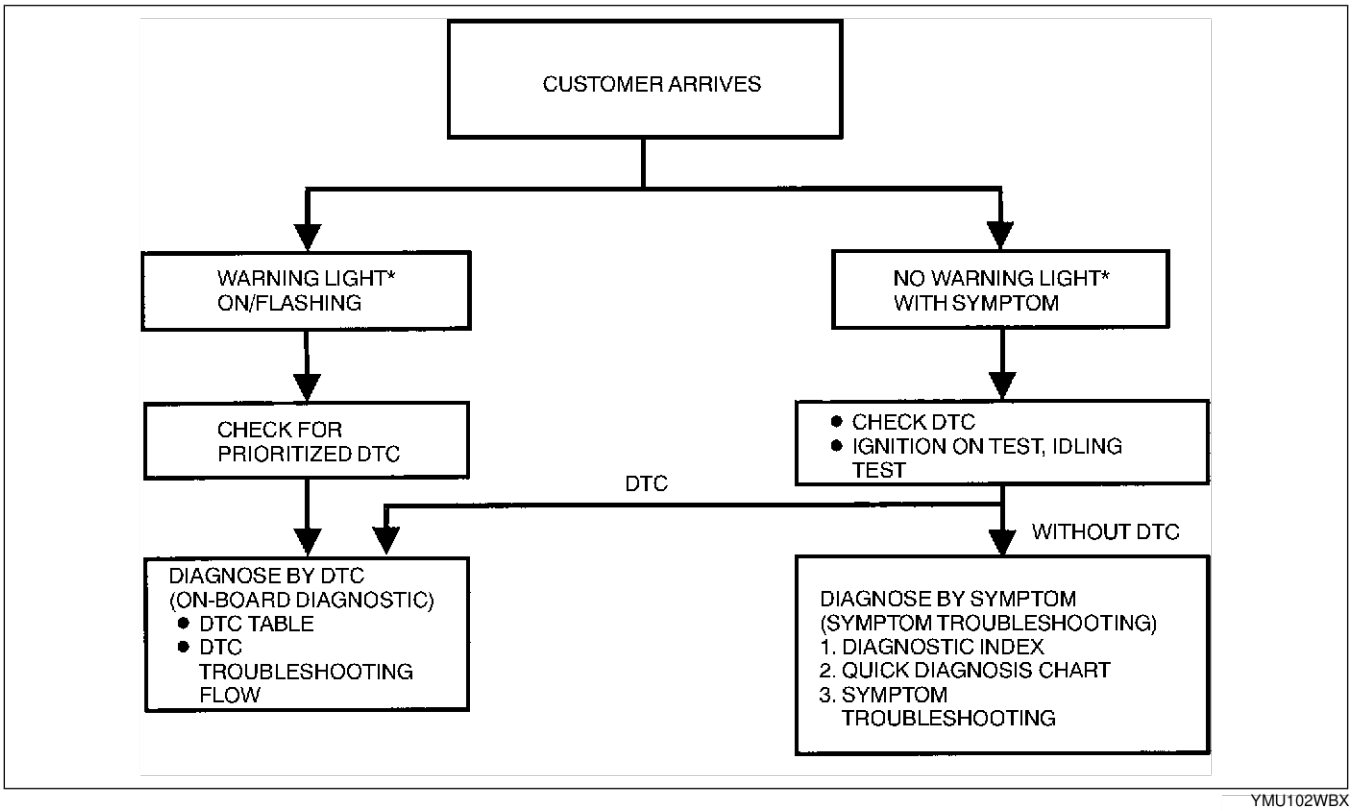

YMU102WBX

*:Malfunction Indicator lamp (MIL), HOLD lamp

End Of Ste

AUTOMATIC TRANSAXLE ON-BOARD DIAGNOSTIC FUNCTION

AME577018901W02

DTC Reading Procedure

Using the SST (WDS or equivalent)

1. Perform the necessary vehicle preparation and visual inspection.
2. Connect **SST** (WDS or equivalent) to the vehicle DLC-2 16-pin connector located the left side of the center console.
3. Retrieve DTCs by **SST** (WDS or equivalent).

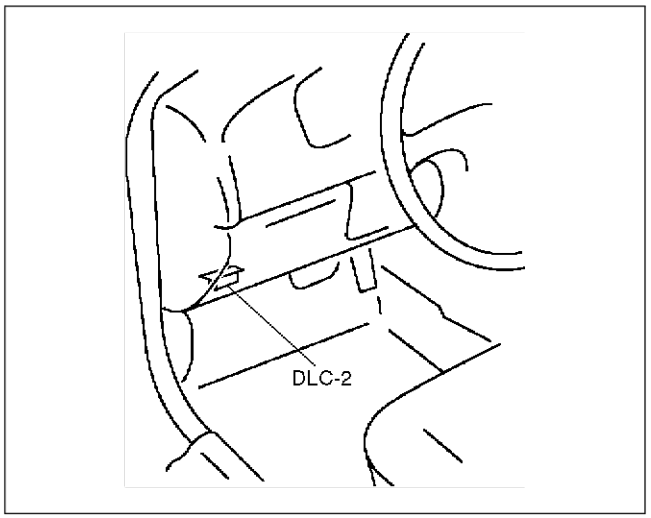

AMU0502W003

Using the voltmeter

1. Turn the ignition switch OFF.
2. Connect the DLC located in the transaxle compartment terminal TAT and ground using a jumper wire.

Caution

- **Connecting to the wrong DLC terminal may cause a malfunction. Carefully connect only to the specified terminal.**

3. Connect the negative battery lead of voltmeter (20V range) to the data link connector terminal FAT, and the positive lead to the data link connector terminal B+.
4. Turn the ignition switch ON.
5. The voltmeter indicates the battery positive voltage for approximately **3 seconds**, then indicates **0V**.
6. Read the DTCs indicated by the movement of the voltmeter's needle. If DTC is not detected, the needle does not move.

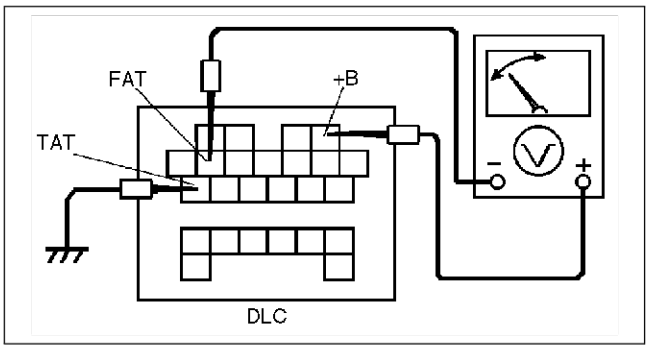

AMU0502W004

Note

- Code No. indication by the voltmeter's needle is as shown.

7. If any DTCs is indicated, inspect the appropriate area and repair as necessary.

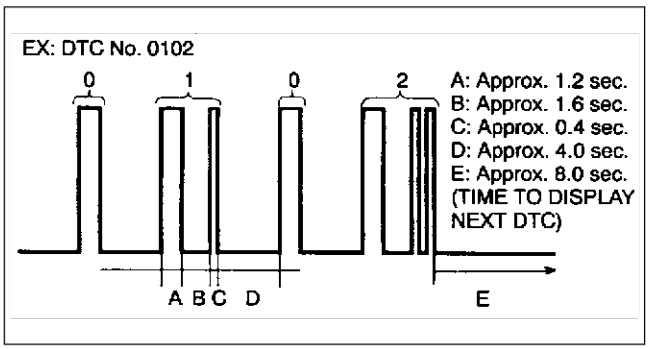

AMU0502W005

End Of Sec

AFTER REPAIR PROCEDURE

AME577018901W03

Caution

- **After repairing a malfunction, perform this procedure to verify that the malfunction has been corrected.**
- **When this procedure is carried out, be sure to drive the vehicle at lawful speed and pay attention to the other vehicles.**

1. Connect the **SST** (WDS or equivalent) to the DLC-2.
2. Turn the ignition key to ON (engine OFF).
3. Select the clear code function and clear the DTC.
4. Perform the following trouble code inspections to ensure that the DTC has been resolved:
   - For P0705
     i. Start the engine.
     ii. Warm up the engine to normal operating temperature.
     iii. Depress the brake pedal, and shift the selector lever between P to L for **5 seconds or more**.
     iv. Go to Step 5.
   - For P0706
     i. Start the engine.
     ii. Warm up the engine to normal operating temperature.
     iii. Depress the brake pedal, and shift the selector lever between P to L for **100 seconds or more**.
     iv. Go to Step 5.
   - For P0711
     i. Decrease ATF temperature to **20 °C {68 °F} or below**.
     ii. Start the engine.
     iii. Drive the vehicle in D range for **10 minutes or more**.
     iv. Go to Step 5

- For P0712
  i. Start the engine.
  ii. Warm up the engine to normal operating temperature.
  iii. Drive the vehicle in D range for **20 seconds or more**.
  iv. Go to Step 5.
- For P0713
  i. Start the engine.
  ii. Warm up the engine to normal operating temperature.
  iii. Drive the vehicle in D range at **20 km/h {12mph} or above** for **300 seconds or more**.
  iv. Go to Step 5.
- For P0715; P0791
  i. Start the engine.
  ii. Drive the vehicle under the following conditions for **2 seconds or more**.
    — Vehicle speed (VSS PID): **40 km/h {25 mph} or above**
    — Engine speed (RPM PID): **1,500 rpm or above**.
    — Selector lever position: D range
  iii. Repeat Step ii again.
  iv. Turn the IG switch to OFF.
  v. Start the engine.
  vi. Drive vehicle under the following conditions for **2 second or more**.
    — Vehicle speed (VSS PID): **40 km/h {25 mph} or above**
    — Engine speed (RPM PID): **1,500 rpm or above**.
    — Selector lever position: D range
  vii. Go to Step 5.
- For P0720
  i. Start the engine.
  ii. Warm up the engine and ATX.
  iii. Drive vehicle under the following conditions for **2 seconds or more**.
    — Selector lever position: D range
    — Vehicle speed (VSS PID): **40 km/h {25 mph}**
    — Engine speed (RPM PID): **1,500 rpm or above**.
  iv. Go to Step 5.
- For P0740
  i. Start the engine.
  ii. Warm up the engine and ATX.
  iii. Drive vehicle under the following conditions for **10 seconds or more**.
    — Vehicle speed (VSS PID): **76 km/h {47 mph}**
    — Selector lever position: D range
    — TCC operating
  iv. Go to Step 5.
- For P0743
  i. Start the engine.
  ii. Warm up the engine and ATX.
  iii. Drive the vehicle in D range and make sure that the gears shift smoothly from 1GR to 5GR and TCC is operated.
  iv. Go to Step 5.
- For P0748, P0751, P0752, P0753, P0756, P0757, P0758, P0761, P0762, P0763, P0768, P0773, P0778, P0798, P1710, PC073, PC100
  i. Start the engine.
  ii. Warm up the engine and ATX.
  iii. Drive the vehicle in D range and make sure that the gears shift smoothly from 1GR to 5GR.
  iv. Go to Step 5.

5. Gradually slow down and stop the vehicle.
6. Make sure that the repaired DTC does not recur.

End Of Ste

DTC TABLE

AME577018901W04

DTC No.	Condition	MIL	HOLD lamp flashes	DC	*1Monitor item	Memory function	Page
P0705	Transaxle range (TR) switch circuit malfunction (power short circuit)	ON	YES	2	CCM	X	(See K2–119 DTC P0705)
P0706	Transaxle range (TR) switch circuit malfunction (Open/ground short circuit)	ON	YES	2	CCM	X	(See K2–122 DTC P0706)
P0711*2	Transaxle fluid temperature (TFT) sensor malfunction (Stuck)	ON	NO	2	CCM	X	(See K2–125 DTC P0711 (ISRAELI SPECS.))
P0712	Transaxle fluid temperature (TFT) sensor circuit malfunction (short circuit)	ON	YES	2	CCM	X	(See K2–126 DTC P0712)
P0713	Transaxle fluid temperature (TFT) sensor circuit malfunction (open circuit)	ON	YES	2	CCM	X	(See K2–128 DTC P0713)
P0715	Input/turbine speed sensor circuit malfunction	ON	YES	2	CCM	X	(See K2–130 DTC P0715)
P0720	Vehicle speedometer sensor (VSS) circuit malfunction	ON	YES	2	CCM	X	(See K2–132 DTC P0720)
P0740*2	Torque converter clutch (TCC) system malfunction	ON	NO	2	CCM	X	(See K2–135 DTC P0740 (ISRAELI SPECS.))
P0743	Torque converter clutch (TCC) solenoid valve circuit malfunction	ON	YES	1	CCM	X	(See K2–137 DTC P0743)
P0748	Pressure control solenoid circuit malfunction	OFF	YES	–	CCM	X	(See K2–139 DTC P0748)
P0751*2	Shift solenoid A malfunction (stuck off)	ON	NO	2	CCM	X	(See K2–142 DTC P0751 (ISRAELI SPECS.))
P0752*2	Shift solenoid A malfunction (stuck on)	ON	NO	2	CCM	X	(See K2–143 DTC P0752 (ISRAELI SPECS.))
P0753	Shift solenoid A circuit malfunction (open/short)	ON	YES	1	CCM	X	(See K2–144 DTC P0753)
P0756*2	Shift solenoid B malfunction (stuck off)	ON	NO	2	CCM	X	(See K2–147 DTC P0756 (ISRAELI SPECS.))
P0757*2	Shift solenoid B malfunction (stuck on)	ON	NO	2	CCM	X	(See K2–148 DTC P0757 (ISRAELI SPECS.))
P0758	Shift solenoid B circuit malfunction (open/short)	ON	YES	1	CCM	X	(See K2–149 DTC P0758)
P0761*2	Shift solenoid C malfunction (stuck off)	ON	NO	2	CCM	X	(See K2–152 DTC P0761 (ISRAELI SPECS.))
P0762*2	Shift solenoid C malfunction (stuck on)	ON	NO	2	CCM	X	(See K2–153 DTC P0762 (ISRAELI SPECS.))
P0763	Shift solenoid C circuit malfunction (open/short)	ON	YES	1	CCM	X	(See K2–154 DTC P0763)
P0768	Reduction timing solenoid valve circuit malfunction (open/short)	OFF	YES	–	CCM	X	(See K2–156 DTC P0768)
P0773	Neutral shift solenoid valve circuit malfunction (open/short)	OFF	YES	–	CCM	X	(See K2–159 DTC P0773)
P0778	2-4 brake solenoid valve circuit malfunction (open/short)	OFF	YES	–	CCM	X	(See K2–162 DTC P0778)

DTC No.	Condition	MIL	HOLD lamp flashes	DC	*1Monitor item	Memory function	Page
P0791	Intermediate sensor circuit malfunction (open/ short)	ON	YES	2	CCM	X	(See K2–165 DTC P0791)
P0798	High clutch solenoid valve circuit malfunction (open/short)	OFF	YES	–	CCM	X	(See K2–168 DTC P0798)
P1710	GND return circuit malfunction	OFF	NO	–	Other	X	(See K2–171 DTC P1710)
U0073	CAN BUS OFF	OFF	YES	1	CCM	X	(See K2–174 DTC U0073)
U0100	TCM cannot receive any signals from PCM	ON	YES	1	CCM	X	(See K2–174 DTC U0100)

*1 : Indicates the applicable item in On-Board System Readiness Test defined by CARB.
*2 : Israeli specs.

End Of Ste

DTC P0705

AME577018901W05

DTC P0705	Transaxle range (TR) switch circuit malfunction (short circuit)
DETECTION CONDITION	• Two or more range signals are input from TR switch for **5 seconds or more**. **Diagnostic support note:** • This is a continuous monitor (CCM). • MIL illuminates if TCM detects the above malfunction conditions in two consecutive drive cycles. • PENDING CODE is available above malfunction condition during first drive cycle. • FREEZE FRAME DATA is available. • HOLD lamp flash. • DTC is stored in TCM memory.
POSSIBLE CAUSE	• TCM malfunction. • Short to power between TR switch terminal A and TCM terminal 2B • Short to power between TR switch terminal E and TCM terminal 1W • Short to power between TR switch terminal D and TCM terminal 1T • Short to power between TR switch terminal G and TCM terminal 1Z • Short to power between TR switch terminal I and TCM terminal 1AA • Short to power between TR switch terminal F and TCM terminal 2C • Damaged connector between TR switch and TCM • TR switch malfunction

DTC P0705	Transaxle range (TR) switch circuit malfunction (short circuit)

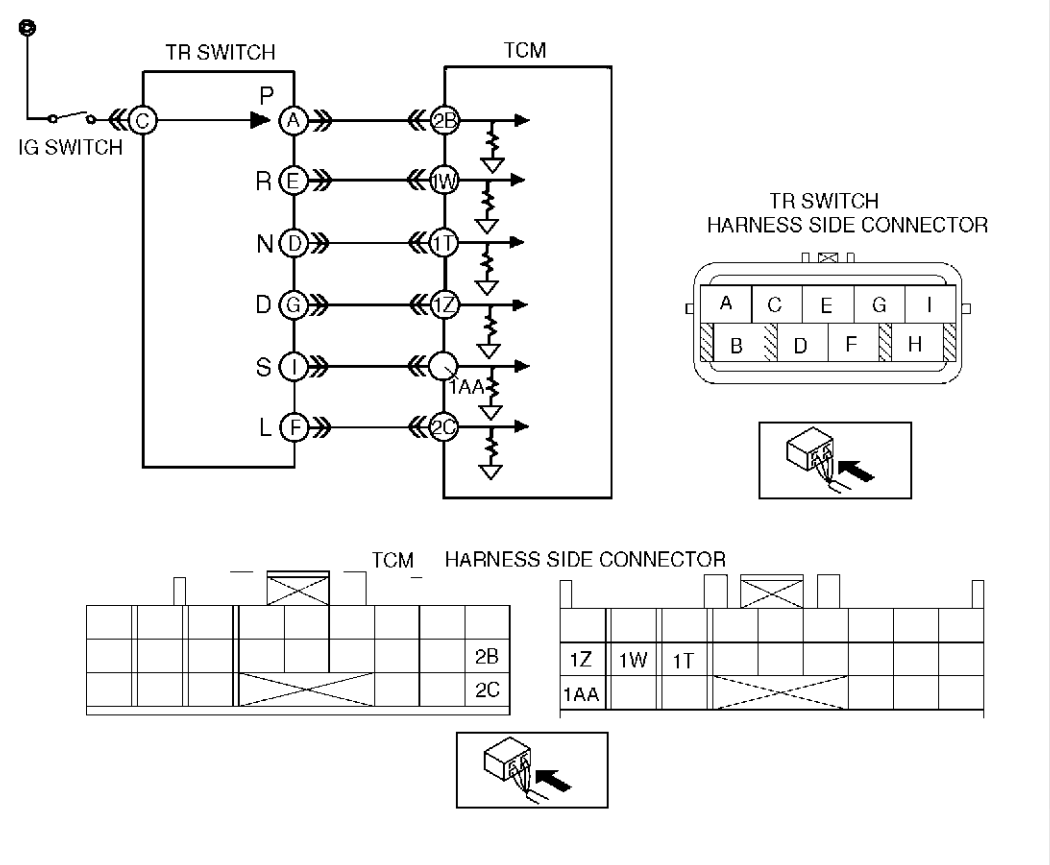

Diagnostic procedure

STEP	INSPECTION		ACTION
1	**VERIFY FREEZE FRAME DATA HAS BEEN RECORDED** • Has FREEZE FRAME PID DATA been recorded?	Yes	Go to next step.
		No	Record FREEZE FRAME PID DATA on repair order, then go to next step.
2	**VERIFY RELATED REPAIR INFORMATION AVAILABILITY** • Check for related Service Bulletins and/or on-line repair information availability. • Is any related repair information available?	Yes	Perform repair or diagnosis according to available repair information. • If vehicle is not repaired, go to next step.
		No	Go to next step.

STEP	INSPECTION		ACTION
3	**VERIFY CURRENT INPUT SIGNAL STATUS-IS CONCERN INTERMITTENT OR CONSTANT?** • Connect volt meter to TCM. • Turn ignition key to ON (engine OFF). • Inspect TCM terminal voltages. (See K2–88 TCM INSPECTION.) — TCM terminal 2B • P position: B+ • Other positions and all ranges: 0V — TCM terminal 1W • R position: B+ • Other positions and all ranges: 0V — TCM terminal 1T — N position: B+ — Other positions and all ranges: 0V — TCM terminal 1Z • D range: B+ • Other ranges and all positions: 0V — TCM terminal 1AA • S range: B+ • Other ranges and all positions: 0V — TCM terminal 2C • L range: B+ • Other ranges and all position: 0V • Are two or more of following terminal voltage at the same time when shifting selector lever from P position to L range?	Yes	Go to next step.
		No	Go to intermittent concern troubleshooting procedure. (See F4–247 INTERMITTENT CONCERN TROUBLESHOOTING.)
4	**INSPECT TR SWITCH CONNECTOR** • Turn ignition key OFF. • Disconnect TR switch connector. • Inspect bent terminals of pins using mirror. • Are TR switch terminals okay?	Yes	Go to next step.
		No	Repair terminals or replace TR switch, then go to Step 8. (See K2–77 TRANSAXLE RANGE (TR) SWITCH REMOVAL/INSTALLATION.)
5	**INSPECT TR SWITCH CIRCUIT MALFUNCTION** • Connect voltmeter to TCM. • Turn ignition key to ON (engine OFF). • Does TCM terminal voltage change from B+ to 0V when TR switch connector is disconnected?	Yes	Go to next step.
		No	Go to Step 7.
6	**INSPECT TR SWITCH CONTINUITY** • Turn ignition key to OFF. • Disconnect TR switch connector. • Inspect TR switch for continuity in positions/ ranges failed in Step 4. • Is there continuity between TR switch terminals (part side)? (See K2–76 TRANSAXLE RANGE (TR) SWITCH INSPECTION.)	Yes	Go to Step 8.
		No	Replace TR switch, then go to Step 8. (See K2–77 TRANSAXLE RANGE (TR) SWITCH REMOVAL/INSTALLATION.)
7	**INSPECT TR SWITCH CIRCUIT FOR SHORT TO POWER** • Turn ignition key to ON (engine OFF). • Measure voltage at TR switch terminal A, E, D, G, I, and F (harness-side). • Is there **0 V** at TR switch harness side connector?	Yes	Go to next step.
		No	Repair or replace wiring, then go to next step.
8	**VERIFY TROUBLESHOOTING OF DTC P0705 COMPLETED** • Make sure to reconnect all disconnected connectors. • Clear DTC from memory using WDS or equivalent. • Turn ignition key to on (engine off). • Drive vehicle in each range (P, R, N, D, S, and L) for **5 seconds or more**. • Is same DTC present?	Yes	Replace TCM, then go to next step. (See K2–94 TCM REMOVAL/INSTALLATION.)
		No	Go to next step.
9	**VERIFY AFTER REPAIR PROCEDURE** • Perform “After Repair Procedure”. (See K2–116 AFTER REPAIR PROCEDURE.) • Is there any DTC present?	Yes	Go to applicable DTC inspection.
		No	Troubleshooting completed.

DTC P0706

AME577018901W06

DTC P0706	Transaxle range (TR) switch circuit malfunction (open/ground short circuit)
DETECTION CONDITION	• No range signal is input from TR switch for **100 seconds or more**. **Diagnostic support note:** • This is a continuous monitor (CCM). • MIL illuminates if TCM detects the above malfunction conditions in two consecutive drive cycles. • PENDING CODE is available. • FREEZE FRAME DATA is available. • HOLD lamp flashes. • DTC is stored in TCM memory.
POSSIBLE CAUSE	• TR switch malfunction. • TR switch misadjustment • Short to ground between TR switch terminal A and TCM terminal 2B • Short to ground between TR switch terminal E and TCM terminal 1W • Short to ground between TR switch terminal D and TCM terminal 1T • Short to ground between TR switch terminal G and TCM terminal 1Z • Short to ground between TR switch terminal I and TCM terminal 1AA • Short to ground between TR switch terminal F and TCM terminal 2C • Open circuit between TR switch terminal A and TCM terminal 2B • Open circuit between TR switch terminal E and TCM terminal 1W • Open circuit between TR switch terminal D and TCM terminal 1T • Open circuit between TR switch terminal G and TCM terminal 1Z • Open circuit between TR switch terminal I and TCM terminal 1AA • Open circuit between TR switch terminal F and TCM terminal 2C • Open circuit between TR switch terminal C and IG key (ACC) • Short to ground between TR switch terminal C and IG key (ACC) • Damaged connector between TR switch and TCM. • TCM malfunction.

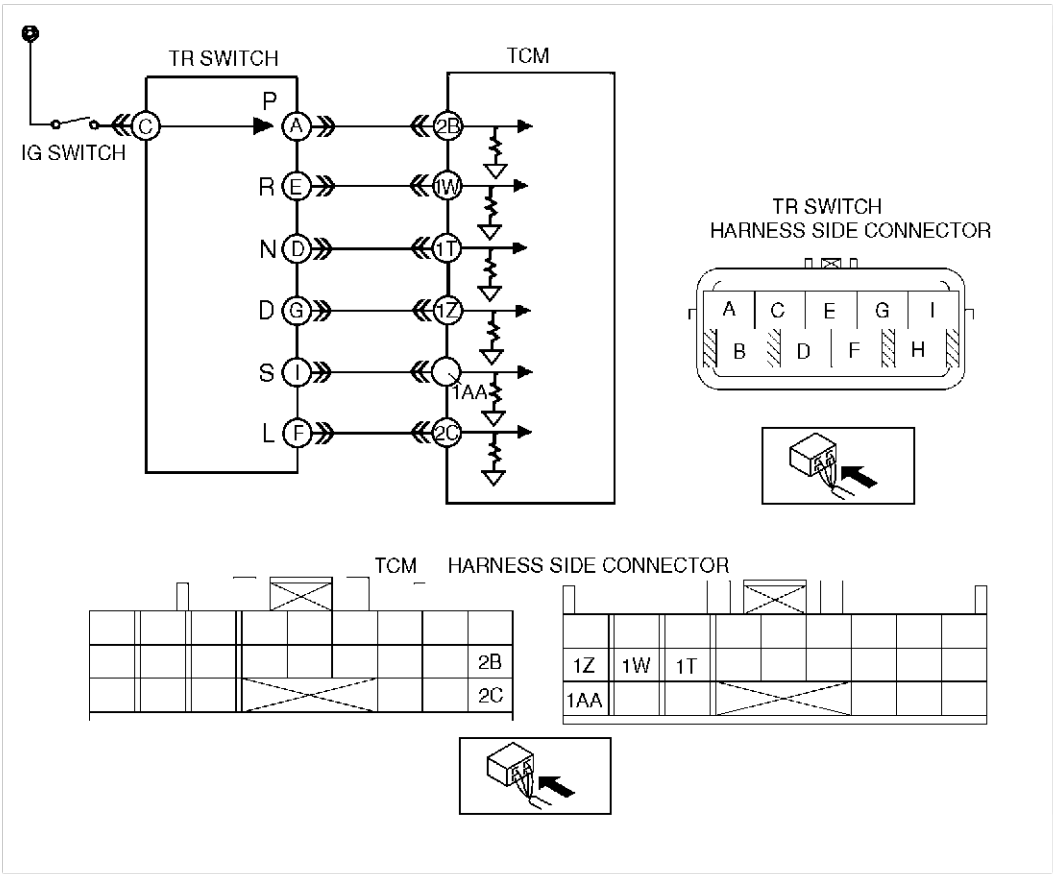

Diagnostic procedure

STEP	INSPECTION		ACTION
1	**VERIFY FREEZE FRAME DATA HAS BEEN RECORDED** • Has FREEZE FRAME PID DATA been recorded?	Yes	Go to next step.
		No	Record FREEZE FRAME PID DATA on repair order, then go to next step.
2	**VERIFY RELATED REPAIR INFORMATION AVAILABILITY** • Check for related Service Bulletins and/or on-line repair information availability. • Is any related repair information available?	Yes	Perform repair or diagnosis according to available repair information. • If vehicle is not repaired, go to next step.
		No	Go to next step.
3	**INSPECT TCM CONNECTOR FOR POOR CONNECTION** • Turn ignition key to OFF. • Check for poor connection (damaged pulled-out terminals, corrosion, etc.). • Are terminals okay?	Yes	Go to next step.
		No	Repair terminals, then go to Step 12.
4	**INSPECT TR SWITCH CIRCUIT** • Connect voltmeter to TCM. • Inspect TCM terminal voltage. — TCM terminal 2B • P position: B+ • Other positions and all ranges: 0V — TCM terminal 1W • R position: B+ • Other position and all ranges: 0V — TCM terminal 1T • N position: B+ • Other position and all range: 0V — TCM terminal 1Z • D range: B+ • Other ranges and all positions: 0V — TCM terminal 1AA • S range: B+ • Other ranges and all positions: 0V — TCM terminal 2C • L range: B+ • Other ranges and all positions: 0V • Are any of following terminal voltage turned on for even a moment while shifting selector lever slowly from P position to L range?	Yes	Adjust TR switch, then go to Step 12. (See K2–79 TRANSAXLE RANGE (TR) SWITCH ADJUSTMENT.)
		No	Go to next step.
5	**INSPECT TR SWITCH CONNECTOR FOR POOR CONNECTION** • Turn ignition key to OFF. • Check for poor connection (damaged pulled-out terminals, corrosion, etc.). • Are terminals okay?	Yes	Go to next step.
		No	Repair terminals, then go to Step 12.
6	**INSPECT TR SWITCH CIRCUIT** • Disconnect TR switch connector. • Connect voltmeter to TCM. • Turn ignition key to ON (engine OFF). • Connect harness side connector power line and signal line using jumper wire — P position: C and A — R position: C and E — N position: C and D — D range: C and G — S range: C and I — L range: C and F • Inspect if terminal voltage changes. — 0V to B+ • Does terminal voltage change?	Yes	Go to next step.
		No	Go to Step 9.

STEP	INSPECTION		ACTION
7	**INSPECT TR SWITCH FOR OPEN CIRCUIT** • Turn ignition key to OFF. • Inspect continuity between TR switch terminals (part side). — P position: C and A — R position: C and E — N position: C and D — D range: C and G — S range: C and I — L range: C and F • Is there continuity between TR switch terminals (part side)? (See K2–76 TRANSAXLE RANGE (TR) SWITCH INSPECTION.)	Yes	Go to Step 12.
		No	Replace TR switch, then go to Step 12. (See K2–77 TRANSAXLE RANGE (TR) SWITCH REMOVAL/INSTALLATION.)
8	**INSPECT TR SWITCH POWER CIRCUIT FOR OPEN CIRCUIT** • Check voltage at TR switch terminal C (harness-side). • Is there **B+** at TR switch terminal C (harness-side)?	Yes	Go to next step.
		No	Inspect main fuse. • If okay, repair or replace wiring, then go to Step 12.
9	**INSPECT PCM CONNECTOR FOR POOR CONNECTION** • Turn ignition key to OFF. • Check for poor connection (damaged pulled-out terminals, corrosion, etc.). • Are terminals okay?	Yes	Go to next step.
		No	Repair terminals, then go to Step 12.
10	**INSPECT TR SWITCH SIGNAL CIRCUIT FOR OPEN CIRCUIT** • Check continuity between TR switch terminals (harness-side) and TCM terminals (harness-side). — P position: A and 2B — R position: E and 1W — N position: D and 1T — D range: G and 1Z — S range: I and 1AA — L range: F and 2C • Is there continuity?	Yes	Go to next step.
		No	Repair or replace harness, then go to Step 12.
11	**INSPECT TR SWITCH CIRCUIT FOR SHORT TO GROUND** • Check continuity between TCM terminals (harness-side) and body ground. — P position: 2B and body ground — R position: 1W and body ground — N position: 1T and body ground — D range: 1Z and body ground — S range: 1AA and body ground — L range: 2C and body ground • Is there continuity?	Yes	Go to next step.
		No	Repair or replace harness, then go to next step.
12	**VERIFY TROUBLESHOOTING OF DTC P0706 COMPLETED** • Make sure to reconnect all disconnected connectors. • Clear DTC from memory using WDS or equivalent. • Drive vehicle in each range (P, R, N, D, S, and L) for **100 seconds or more**. • Is there pending code present?	Yes	Replace TCM, then go to next step. (See K2–94 TCM REMOVAL/INSTALLATION.)
		No	Go to next step.
13	**VERIFY AFTER REPAIR PROCEDURE** • Perform “After Repair Procedure”. (See K2–116 AFTER REPAIR PROCEDURE.) • Is there any DTC present?	Yes	Go to applicable DTC inspection.
		No	Troubleshooting completed.

End Of Sie

DTC P0711 (ISRAELI SPECS.)

AME577018901W07

DTC P0711	Transaxle fluid temperature (TFT) sensor malfunction (stuck)
DETECTION CONDITION	• TFT sensor signal stays outside normal temperature range for **10 minute or more**. **Diagnostic support note:** • This is a continuous monitor (CCM). • MIL illuminates if TCM detects the above malfunction conditions in two consecutive drive cycles. • PENDING CODE is available. • FREEZE FRAME DATA is available. • HOLD lamp does not flash. • DTC is stored in TCM memory.
POSSIBLE CAUSE	• TFT sensor malfunction. • Connector corrosion. • TCM malfunction.

Diagnostic procedure

STEP	INSPECTION		ACTION
1	**VERIFY FREEZE FRAME DATA HAS BEEN RECORDED** • Has FREEZE FRAME PID DATA been recorded?	Yes	Go to next step.
		No	Record FREEZE FRAME PID DATA on repair order, then go to next step.
2	**VERIFY RELATED REPAIR INFORMATION AVAILABILITY** • Check for related Service Bulletins and/or on-line repair information availability. • Is any related repair information available?	Yes	Perform repair or diagnosis according to available repair information. • If vehicle is not repaired, go to next step.
		No	Go to next step.
3	**INSPECT TFT SENSOR VOLTAGE** • Connect voltmeter to TCM terminal 1F. • Turn ignition key to ON (engine OFF). • Is TCM terminal voltage **1.55 V**?	Yes	Go to next step.
		No	Go to Step 6.
4	**VERIFY CURRENT INPUT SIGNAL STATUS - IS CONCERN INTERMITTENT OR CONSTANT?** • Start engine. • Drive vehicle at **60 km/h {37 mph} or above** for **10 minutes or more**. — ATF **20 °C {68 °F}**: **1.55 V** — ATF **60 °C {140 °F}**: **0.7 V** • Does TCM terminal voltage change?	Yes	Go to Step 6.
		No	Go to next step.
5	**INSPECT TERMINAL CONDITION** • Turn ignition key to OFF. • Disconnect terminal component No.2 (8-pin). • Inspect terminals for corrosion. • Are terminals okay?	Yes	Replace TFT sensor, then go to next step.
		No	Repair or replace terminals, then go to next step.
6	**VERIFY TROUBLESHOOTING OF DTC P0711 COMPLETED** • Make sure to reconnect all disconnected connectors. • Clear DTC from memory using WDS or equivalent. • Decrease ATF temperature to **20 °C {68 °F} or below**. • Drive vehicle at **60 km/h {37 mph} or above** for **10 minutes or more**. • Is same DTC present?	Yes	Replace TCM, then go to next step. (See K2–94 TCM REMOVAL/INSTALLATION.)
		No	Go to next step.
7	**VERIFY AFTER REPAIR PROCEDURE** • Perform “After Repair Procedure”. (See K2–116 AFTER REPAIR PROCEDURE.) • Is there any DTC present?	Yes	Go to applicable DTC inspection.
		No	Troubleshooting completed.

End Of Sie

DTC P0712

AME577018901W08

DTC P0712	Transaxle fluid temperature (TFT) sensor circuit malfunction (short to ground)
DETECTION CONDITION	• Signal from TFT sensor is **0.088 V or less** for **20 seconds or more**. **Diagnostic support note:** • This is a continuous monitor (CCM). • MIL illuminates if TCM detects the above malfunction conditions in two consecutive drive cycles. • PENDING CODE is available. • FREEZE FRAME DATA is available. • HOLD lamp flashes. • DTC is stored in TCM memory.
POSSIBLE CAUSE	• TFT sensor malfunction. • Open circuit between TFT sensor and TCM terminal 1F • Open circuit between TFT sensor and TCM terminal 1B • Damaged connectors between TFT sensor and TCM • TCM malfunction

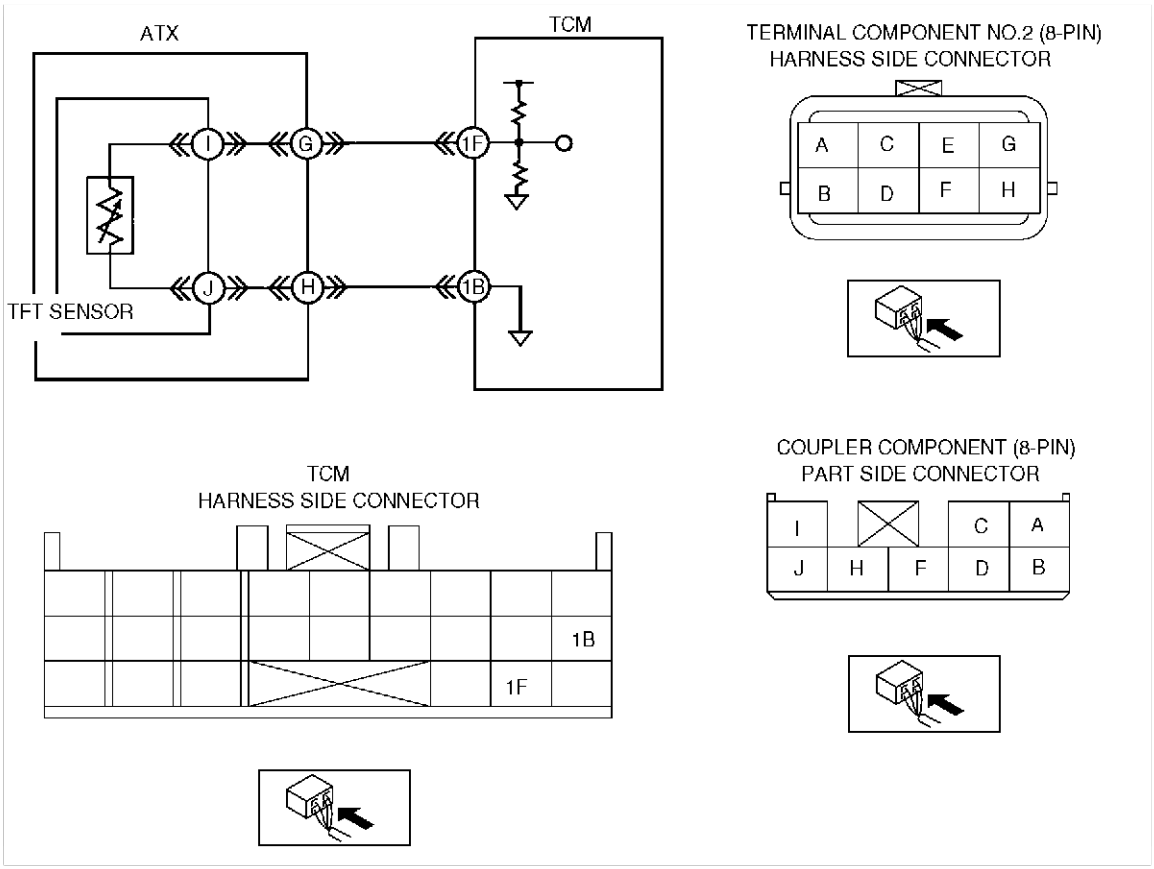

Diagnostic procedure

STEP	INSPECTION		ACTION
1	**VERIFY FREEZE FRAME DATA HAS BEEN RECORDED** • Has FREEZE FRAME PID DATA been recorded?	Yes	Go to next step.
		No	Record FREEZE FRAME PID DATA on repair order, then go to next step.
2	**VERIFY RELATED REPAIR INFORMATION AVAILABILITY** • Check for related Service Bulletins and/or on-line repair information availability. • Is any related repair information available?	Yes	Perform repair or diagnosis according to available repair information. • If vehicle is not repaired, go to next step.
		No	Go to next step.
3	**VERIFY CURRENT INPUT SIGNAL STATUS - IS CONCERN INTERMITTENT OR CONSTANT?** • Turn ignition key to OFF. • Connect voltmeter to TCM terminal 1F. • Turn ignition key to ON (engine OFF). • Are TCM terminal voltage **within 0.2—4.9 V**?	Yes	Go to intermittent concern troubleshooting procedure. (See F4–247 INTERMITTENT CONCERN TROUBLESHOOTING.)
		No	Go to next step.

STEP	INSPECTION		ACTION
4	**INSPECT TERMINAL CONDITION** • Turn ignition key to OFF. • Disconnect terminal component No.2. • Inspect bent terminals. • Is there any malfunction?	Yes	Repair or replace terminals, then go to Step 9. • If terminals cannot be repaired, replace harness, then go to Step 9.
		No	Go to next step.
5	**INSPECT TFT SENSOR CIRCUIT** • Turn ignition key to ON (engine OFF). • Verify if TCM terminal voltage changes to **4.9 V or above** when terminal component No.2 disconnected. • Does TCM terminal voltage change?	Yes	Go to next step.
		No	Go to Step 8.
6	**INSPECT COUPLER COMPONENT (8-PIN) TERMINALS CONDITION** • Turn ignition key to OFF. • Disconnect coupler component (8-pin) connector. • Inspect bent coupler component (8-pin) terminals. • Is there any malfunction?	Yes	Repair or replace connector and/or terminal.
		No	Go to next step.
7	**INSPECT COUPLER COMPONENT (8-PIN) CIRCUIT FOR SHORT TO GROUND** • Check continuity between coupler component (8-pin) terminals (part-side) and body ground. — I and body ground — J and body ground • Is there any continuity?	Yes	Replace TFT sensor, then go to Step 9.
		No	Repair or replace coupler component, then go to Step 9.
8	**INSPECT TERMINAL COMPONENT NO.2 (8-PIN) CIRCUIT FOR SHORT TO GROUND** • Turn ignition key to OFF. • Check continuity between terminal component No.2 terminal G (harness-side) and body ground. • Is there any continuity?	Yes	Repair or replace harness, then go to next step.
		No	Go to next step.
9	**VERIFY TROUBLESHOOTING OF DTC P0712 COMPLETED** • Make sure to reconnect all disconnected connectors. • Clear DTC from memory using WDS or equivalent. • Drive vehicle under following condition for **150 seconds or more**. — Vehicle speed (VSS PID): **20 km/h {12 mph}** • Is same DTC present?	Yes	Replace TCM, then go to next step. (See K2–94 TCM REMOVAL/INSTALLATION.)
		No	Go to next step.
10	**VERIFY AFTER REPAIR PROCEDURE** • Perform “After Repair Procedure”. (See K2–116 AFTER REPAIR PROCEDURE.) • Is there any DTC present?	Yes	Go to applicable DTC inspection.
		No	Troubleshooting completed.

End Of Sie

DTC P0713

AME577018901W09

DTC P0713	Transaxle fluid temperature (TFT) sensor circuit malfunction (open circuit)
DETECTION CONDITION	• Vehicle speed is **20 km/h {12.4 mph} or greater**, and signal from TFT sensor is **2.4 V or above** for **300 seconds or more**. **Diagnostic support note:** • This is a continuous monitor (CCM). • MIL illuminates if TCM detects the above malfunction conditions in two consecutive drive cycles. • PENDING CODE is available. • FREEZE FRAME DATA is available. • HOLD lamp flashes. • DTC is stored in TCM memory.
POSSIBLE CAUSE	• TFT sensor malfunction. • Open circuit between TFT sensor and TCM terminal 1F • Open circuit between TFT sensor and TCM terminal 1B • Damaged connectors between TFT sensor and TCM • TCM malfunction

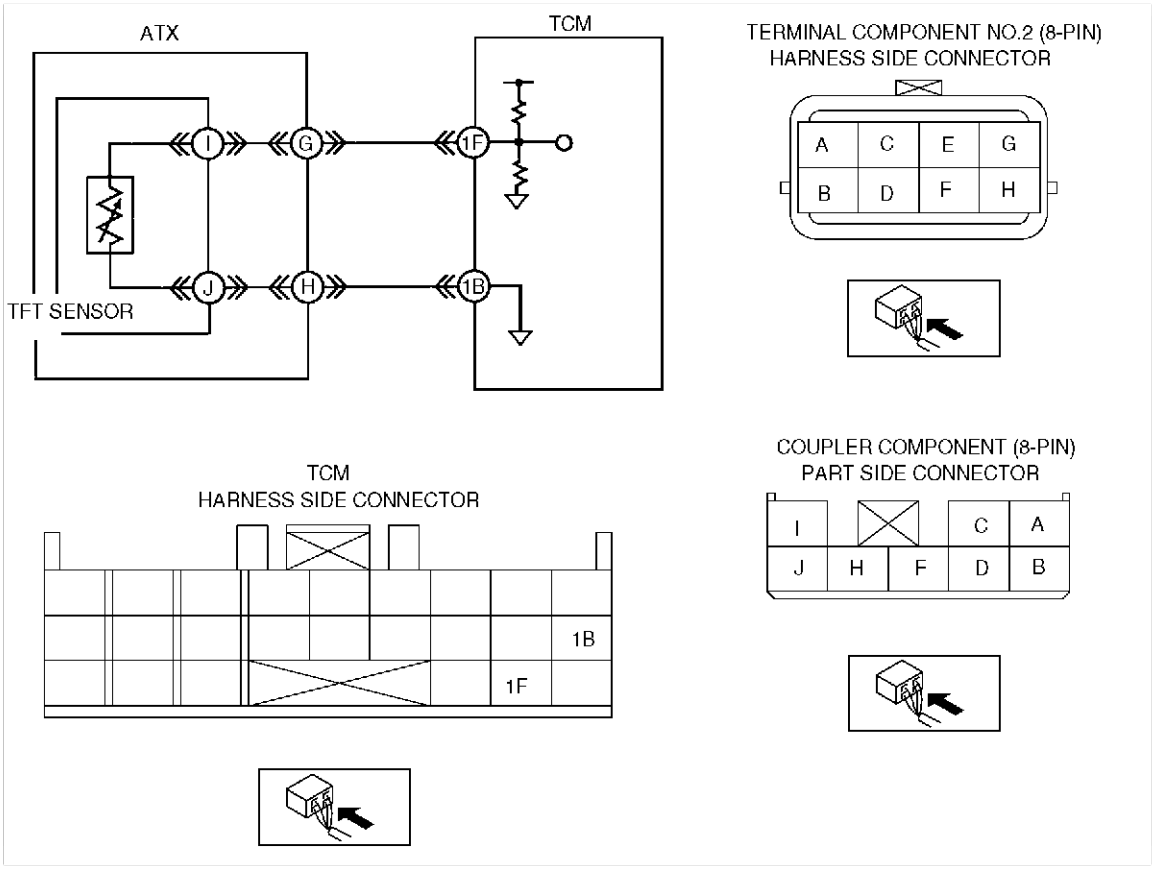

Diagnostic procedure

STEP	INSPECTION		ACTION
1	**VERIFY FREEZE FRAME DATA HAS BEEN RECORDED** • Has FREEZE FRAME PID DATA been recorded?	Yes	Go to next step.
		No	Record FREEZE FRAME PID DATA on repair order, then go to next step.
2	**VERIFY RELATED REPAIR INFORMATION AVAILABILITY** • Check for related Service Bulletins and/or on-line repair information availability. • Is any related repair information available?	Yes	Perform repair or diagnosis according to available repair information. • If vehicle is not repaired, go to next step.
		No	Go to next step.
3	**VERIFY CURRENT INPUT SIGNAL STATUS - IS CONCERN INTERMITTENT OR CONSTANT?** • Turn ignition key to OFF. • Connect voltmeter to TCM terminal 1F • Turn ignition key to ON (engine OFF). • Are TCM terminal voltage **within 0.2—4.9 V**?	Yes	Go to intermittent concern troubleshooting procedure. (See F4–247 INTERMITTENT CONCERN TROUBLESHOOTING.)
		No	Go to next step.

STEP	INSPECTION		ACTION
4	**INSPECT TERMINAL COMPONENT NO.2 (8-PIN) FOR POOR CONNECTION** • Turn ignition key to OFF. • Inspect terminal component No.2 (8-pin) connection. • Disconnect terminal component No.2 (8-pin). • Check for poor connection (damaged, pulled-out terminals, corrosion etc.). • Are connector and terminals okay?	Yes	Go to next step.
		No	Repair or replace connector and/or terminal, then go to Step 11.
5	**INSPECT TFT SENSOR CIRCUIT** • Connect voltmeter to TCM terminal 1F. • Turn ignition key to ON (engine OFF). • Connect between terminal component No.2 (8-pin) terminal H and G (harness-side) using jumper wire. • Verify if TCM terminal voltage changes to **0.2 V or below**. • Does TCM terminal voltage change?	Yes	Go to next step.
		No	Go to Step 8.
6	**INSPECT COUPLER COMPONENT CONNECTOR CONNECTION FOR POOR CONNECTION** • Turn ignition key to OFF. • Remove control valve body cover. • Disconnect coupler component connector. • Check for poor connection (damaged, pulled-out terminals, corrosion, etc.). • Are terminals okay?	Yes	Go to next step.
		No	Repair or replace connector and/or terminal, then go to Step 11.
7	**INSPECT COUPLER COMPONENT CIRCUIT FOR OPEN CIRCUIT** • Check continuity between coupler component (8-pin) terminals I and J (part-side). • Is there continuity?	Yes	Repair or replace terminal component No.2 (8-pin).
		No	Replace TFT sensor, then go to Step 11. (See K2–80 TRANSAXLE FLUID TEMPERATURE (TFT) SENSOR REMOVAL/INSTALLATION.)
8	**INSPECT TCM CONNECTOR FOR POOR CONNECTION** • Turn ignition key to OFF. • Disconnect TCM connector. • Check for poor connection (damaged, pulled-out terminals, corrosion, etc.). • Are terminals okay?	Yes	Go to next step.
		No	Repair terminals, then go to Step 11.
9	**INSPECT HARNESS FOR OPEN CIRCUIT** • Disconnect terminal component No.2 (8-pin) • Connect the TCM connector. • Turn ignition key to ON (engine OFF). • Inspect voltage at terminal component No.2 (8-pin) terminal G (harness-side). • Is voltage **5 V**?	Yes	Go to next step.
		No	Repair or replace harness, then go to Step 11.
10	**INSPECT TERMINAL COMPONENT NO.2 (8-PIN) CIRCUIT FOR OPEN CIRCUIT** • Turn ignition key to OFF. • Check continuity between terminal component No.2 (8-pin) terminal H (harness-side) and body ground. • Is there continuity?	Yes	Go to next step.
		No	Repair or replace harness, then go to next step.
11	**VERIFY TROUBLESHOOTING OF DTC P0713 COMPLETED** • Make sure to reconnect all disconnected connectors. • Clear DTC from memory using WDS or equivalent. • Drive vehicle for **150 seconds or more**. • Is same DTC present?	Yes	Replace TCM, then go to next step. (See K2–94 TCM REMOVAL/INSTALLATION.)
		No	Go to next step.
12	**VERIFY AFTER REPAIR PROCEDURE** • Perform “After Repair Procedure”. (See K2–116 AFTER REPAIR PROCEDURE.) • Is there any DTC present?	Yes	Go to applicable DTC inspection.
		No	Troubleshooting completed.

DTC P0715

AME577018901W10

DTC P0715	Input/turbine speed sensor circuit malfunction
DETECTION CONDITION	• The following conditon is detected twice: — Input/turbine speed sensor signal is **600 rpm or less** while engine speed is **1,500 rpm or greater** and vehicle speed is **40 km/h {24.8 mph} or greater** in D, S, or L range. **Diagnostic support note:** • This is a continuous monitor (CCM). • MIL illuminates if TCM detects the above malfunction conditions in two consecutive drive cycles. • PENDING CODE is available. • FREEZE FRAME DATA is available. • HOLD lamp flashes. • DTC is stored in TCM memory.
POSSIBLE CAUSE	• Input/turbine speed sensor malfunction. • Short to ground between input/turbine speed sensor terminal B and TCM terminal 1N • Short to ground between input/turbine speed sensor terminal A and TCM terminal 2F • Open circuit between input/turbine speed sensor terminal B and TCM terminal 1N • Open circuit between input/turbine speed sensor terminal A and TCM terminal 2F • Damaged connectors between input/turbine speed sensor and TCM. • TCM malfunction.

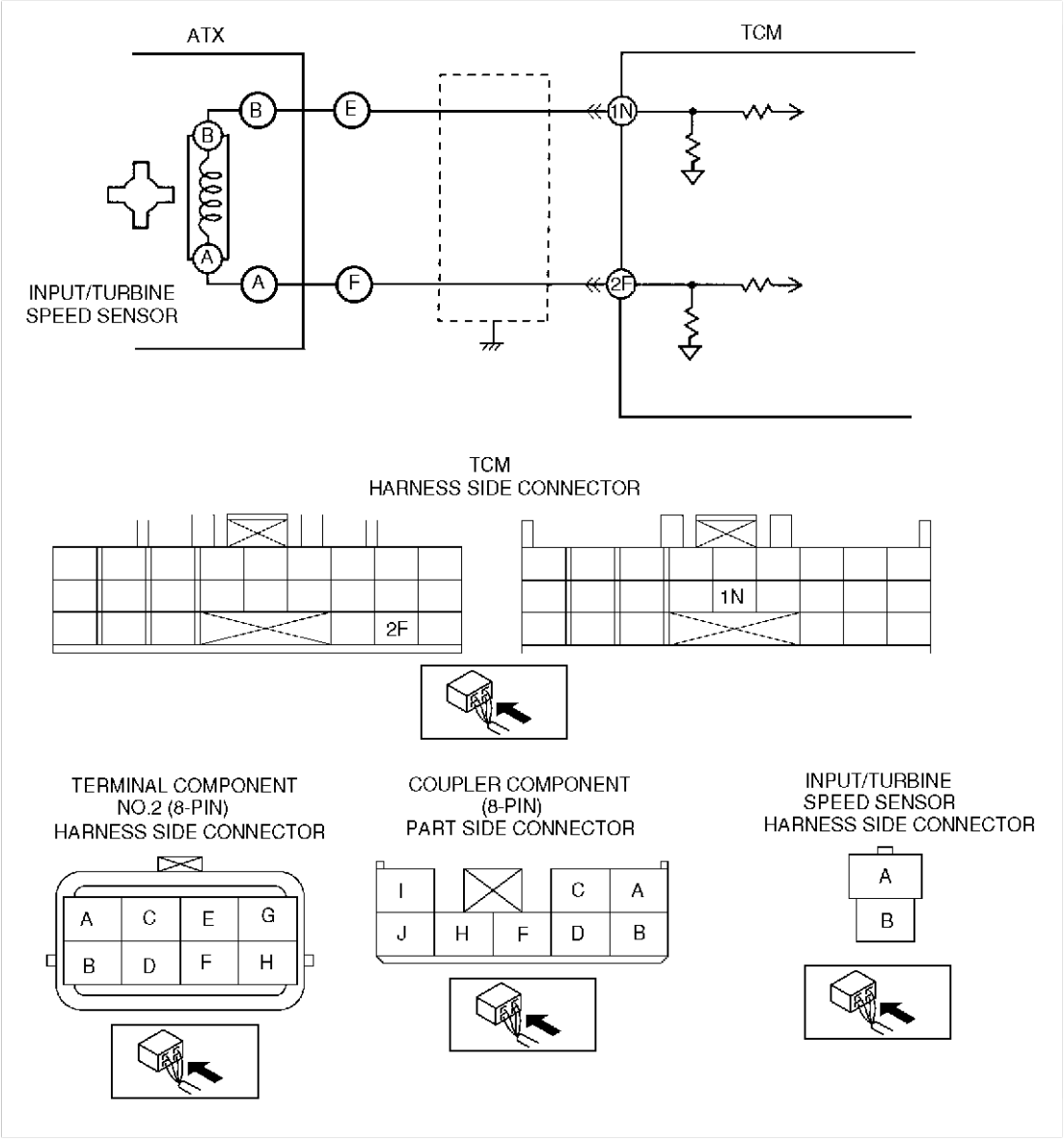

Diagnostic procedure

STEP	INSPECTION		ACTION
1	**VERIFY FREEZE FRAME DATA HAS BEEN RECORDED** • Has FREEZE FRAME PID DATA been recorded?	Yes	Go to next step.
		No	Record FREEZE FRAME PID DATA on repair order, then go to next step.
2	**VERIFY RELATED REPAIR INFORMATION AVAILABILITY** • Check for related Service Bulletins and/or on-line repair information availability. • Is any related repair information available?	Yes	Perform repair or diagnosis according to available repair information. • If vehicle is not repaired, go to next step.
		No	Go to next step.
3	**INSPECT TERMINAL COMPONENT NO.2 (8-PIN) CONNECTOR FOR POOR CONNECTION** • Turn ignition key to OFF. • Disconnect terminal component No.2 (8-pin) connector. • Check for poor connection (damaged, pulled-out terminals, corrosion, etc.). • Are terminals okay?	Yes	Go to next step.
		No	Repair or replace terminals, then go to Step 12.
4	**INSPECT INPUT/TURBINE SPEED SENSOR RESISTANCE** • Measure resistance between terminal component No.2 (8-pin) (transaxle case side). • Is resistance **within 513—627 ohms** between terminal component No.2 (8-pin) terminal E and F (transaxle case side)?	Yes	Go to next step.
		No	Go to Step 8
5	**INSPECT TCM CONNECTOR FOR POOR CONNECTION** • Disconnect TCM connector. • Check for poor connection (damaged, pulled-out terminals, corrosion, etc.). • Are terminals okay?	Yes	Go to next step.
		No	Repair terminals, then go to Step 12.
6	**INSPECT TERMINAL COMPONENT NO.2 (8-PIN) CIRCUIT FOR OPEN** • Check terminal component No.2 (8-pin) terminals (harness-side) and TCM terminals (harness-side). — F and 2F — E and 1N • Is there continuity?	Yes	Go to next step.
		No	Repair or replace harness, then go to Step 12.
7	**INSPECT TERMINAL COMPONENT NO.2 (8-PIN) CIRCUIT FOR SHORT TO GROUND** • Check terminal component No.2 (8-pin) terminal (harness-side) and body ground. — F and body ground — E and body ground • Is there any continuity?	Yes	Repair or replace harness, then go to Step 12.
		No	Go to Step 12.
8	**INSPECT COUPLER COMPONENT (8-PIN) CONNECTOR FOR POOR CONNECTION** • Disassemble the control valve body cover. • Disconnect coupler component (8-pin) connector. • Check for poor connection (damaged, pulled-out terminals, corrosion, etc.). • Are terminals okay?	Yes	Go to next step.
		No	Repair terminals, then go to Step 12.
9	**INSPECT INPUT/TURBINE SPEED SENSOR RESISTANCE** • Measure resistance between coupler component (8-pin) (transaxle case side). • Is resistance **within 513—527 ohms** between coupler component (8-pin) terminal B and A (part side)?	Yes	Repair or replace terminal component, then go to Step 12.
		No	Go to next step.

STEP	INSPECTION		ACTION
10	**INSPECT INPUT/TURBINE SPEED SENSOR CONNECTOR FOR POOR CONNECTION** • Disassemble the transaxle. • Disconnect input/turbine speed sensor connector. • Check for poor connection (damaged, pulled-out terminals, corrosion, etc.). • Are terminals okay?	Yes	Go to next step.
		No	Repair terminals, then go to Step 12.
11	**INSPECT INPUT/TURBINE SPEED SENSOR RESISTANCE** • Measure resistance between input/turbine speed sensor. • Is resistance **within 513—627 ohms** between input/turbine speed sensor connector terminal A and B (part side)?	Yes	Repair or replace coupler component, then go to next step.
		No	Replace input/turbine speed sensor, then go to next step.
12	**VERIFY TROUBLESHOOTING OF DTC P0715 COMPLETED** • Make sure to reconnect all disconnected connectors. • Clear DTC from memory using WDS or equivalent. • Drive vehicle with vehicle speed **40 km/h {25 mph} or above** and engine speed **1,500 rpm or above** for **2 second or more** • Repeat Step ii two times. • Is same DTC present?	Yes	Replace TCM, then go to next step. (See K2–94 TCM REMOVAL/INSTALLATION.)
		No	Go to next step.
13	**VERIFY AFTER REPAIR PROCEDURE** • Perform “After Repair Procedure”. (See K2–116 AFTER REPAIR PROCEDURE.) • Is there any DTC present?	Yes	Go to applicable DTC inspection.
		No	Troubleshooting completed.

End Of Sie

DTC P0720

AME577018901W11

DTC P0720	Vehicle speedometer sensor (VSS) malfunction (open/short)
DETECTION CONDITION	• Vehicle speedometer sensor signal is **150 rpm or less** while intermediate sensor signal is**1,400 rpm or greater** in D, S, or L range for **2 second or more**. **Diagnostic support note:** • This is a continuous monitor (CCM). • MIL illuminates if TCM detects the above malfunction conditions in two consecutive drive cycles. • PENDING CODE is available. • FREEZE FRAME DATA is available. • HOLD lamp flashes. • DTC is stored in TCM memory.
POSSIBLE CAUSE	• Open circuit between vehicle speedometer sensor terminal B and TCM terminal 1M • Open circuit between vehicle speedometer sensor terminal A and TCM terminal 1V • Short to ground between vehicle speedometer sensor terminal B and TCM terminal 1M • Short to ground between vehicle speedometer sensor terminal A and TCM terminal 1V • Vehicle speedometer sensor malfunction • Damaged connectors between vehicle speedometer sensor to TCM • TCM malfunction

DTC P0720	Vehicle speedometer sensor (VSS) malfunction (open/short)

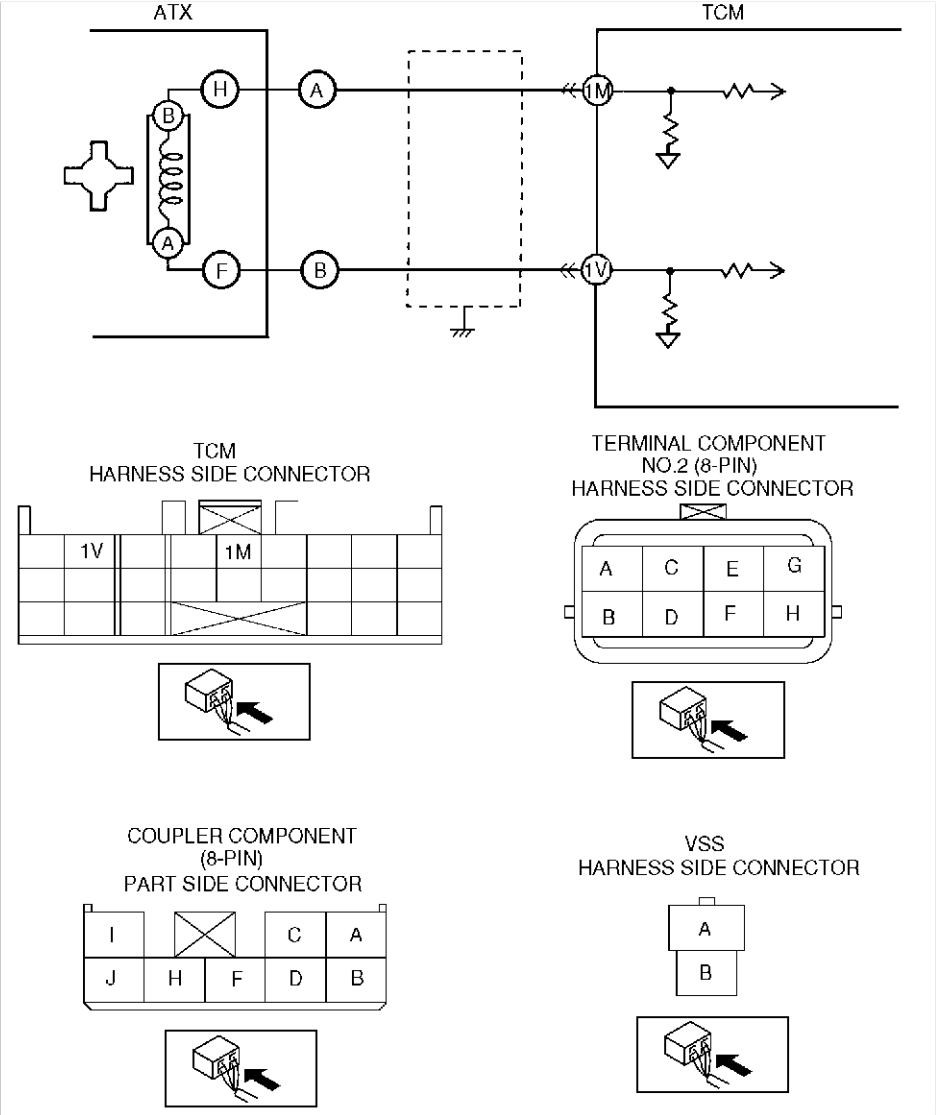

Diagnostic procedure

STEP	INSPECTION		ACTION
1	**VERIFY FREEZE FRAME DATA HAS BEEN RECORDED** • Has FREEZE FRAME PID DATA been recorded?	Yes	Go to next step.
		No	Record FREEZE FRAME PID DATA on repair order, then go to next step.
2	**VERIFY RELATED REPAIR INFORMATION AVAILABILITY** • Check for related Service Bulletins and/or on-line repair information availability. • Is any related repair information available?	Yes	Perform repair or diagnosis according to available repair information. • If vehicle is not repaired, go to next step.
		No	Go to next step.
3	**INSPECT TERMINAL COMPONENT NO.2 (8-PIN) CONNECTOR FOR POOR CONNECTION** • Turn ignition key to OFF. • Disconnect terminal component No.2 (8-pin) connector. • Check for poor connection (damaged, pulled-out terminals, corrosion, etc.). • Are terminals okay?	Yes	Go to next step.
		No	Repair or replace terminals, then go to Step 12.

K2

STEP	INSPECTION		ACTION
4	**INSPECT VEHICLE SPEEDOMETER SENSOR RESISTANCE** • Measure resistance between terminal component No.2 (8-pin) (transaxle case side). • Is resistance **within 513—627 ohms** between terminal component No.2 (8-pin) terminal A and B (transaxle case side)?	Yes	Go to next step.
		No	Go to Step 8
5	**INSPECT TCM CONNECTOR FOR POOR CONNECTION** • Disconnect TCM connector. • Check for poor connection (damaged, pulled-out terminals, corrosion, etc.). • Are terminals okay?	Yes	Go to next step.
		No	Repair terminals, then go to Step 12.
6	**INSPECT TERMINAL COMPONENT NO.2 (8-PIN) CIRCUIT FOR OPEN** • Check terminal component No.2 (8-pin) terminals (harness-side) and TCM terminals (harness-side). — A and 1M — B and 1V • Is there continuity?	Yes	Go to next step.
		No	Repair or replace harness, then go to Step 12.
7	**INSPECT TERMINAL COMPONENT NO.2 (8-PIN) CIRCUIT FOR SHORT TO GROUND** • Check terminal component No.2 (8-pin) terminal (harness-side) and body ground. — A and body ground — B and body ground • Is there any continuity?	Yes	Repair or replace harness, then go to Step 12.
		No	Go to Step 12.
8	**INSPECT COUPLER COMPONENT (8-PIN) CONNECTOR FOR POOR CONNECTION** • Disassemble the control valve body cover. • Disconnect coupler component (8-pin) connector. • Check for poor connection (damaged, pulled-out terminals, corrosion, etc.). • Are terminals okay?	Yes	Go to next step.
		No	Repair terminals, then go to Step 12.
9	**INSPECT VEHICLE SPEEDOMETER SENSOR RESISTANCE** • Measure resistance between coupler component (8-pin) (transaxle case side). • Is resistance **within 513—627 ohms** between coupler component (8-pin) terminal H and F (part side)?	Yes	Repair or replace terminal component, then go to Step 12.
		No	Go to next step.
10	**INSPECT VEHICLE SPEEDOMETER SENSOR CONNECTOR FOR POOR CONNECTION** • Disassemble the transaxle. • Disconnect vehicle speedometer sensor connector. • Check for poor connection (damaged, pulled-out terminals, corrosion, etc.). • Are terminals okay?	Yes	Go to next step.
		No	Repair terminals, then go to Step 12.
11	**INSPECT VEHICLE SPEEDOMETER SENSOR RESISTANCE** • Measure resistance between vehicle speedometer sensor. • Is resistance **within 513—627 ohms** between vehicle speedometer sensor connector terminal A and B (part side)?	Yes	Repair or replace coupler component, then go to next step.
		No	Replace vehicle speedometer sensor, then go to next step.

STEP	INSPECTION		ACTION
12	**VERIFY TROUBLESHOOTING OF DTC P0720 COMPLETED** • Make sure to reconnect all disconnected connectors. • Clear DTC from memory using WDS or equivalent. • Drive vehicle with vehicle speed **40 km/h {25 mph} or above** for **2 second or more** • Is same DTC present?	Yes	Replace TCM, then go to next step. (See K2–94 TCM REMOVAL/INSTALLATION.)
		No	Go to next step.
13	**VERIFY AFTER REPAIR PROCEDURE** • Perform “After Repair Procedure”. (See K2–116 AFTER REPAIR PROCEDURE.) • Is there any DTC present?	Yes	Go to applicable DTC inspection.
		No	Troubleshooting completed.

End Of Sie

DTC P0740 (ISRAELI SPECS.)

AME577018901W12

DTC P0740	TCC system malfunction
DETECTION CONDITION	• RPM difference between crankshaft (engine speed signal) and reverse clutch drum (input/turbine speed sensor signal) exceeds the pre-programmed value. **Diagnostic support note:** • This is continuous monitor (CCM). • MIL illuminates if TCM detects the above malfunction conditions in two consecutive drive cycles. • PENDING CODE is available. • FREEZE FRAME DATA is available. • HOLD lamp does not flash. • DTC is stored in TCM memory.
POSSIBLE CAUSE	• ATF level low. • Deteriorated ATF. • TCC solenoid valve and pressure control solenoid stuck. • Line pressure low. • Oil pump malfunction. • Control valve stuck • Torque convert clutch malfunction • TCM malfunction.

Diagnostic procedure

STEP	INSPECTION		ACTION
1	**VERIFY FREEZE FRAME DATA HAS BEEN RECORDED** • Has FREEZE FRAME PID DATA been recorded?	Yes	Go to next step.
		No	Record FREEZE FRAME PID DATA on repair order, then go to next step.
2	**VERIFY RELATED REPAIR INFORMATION AVAILABILITY** • Check for related Service Bulletins and/or on-line repair information availability. • Is any related repair information available?	Yes	Perform repair or diagnosis according to available repair information. • If vehicle is not repaired, go to next step.
		No	Go to next step.
3	**CHECK ATF CONDITION** • Turn ignition key to OFF. • Check ATF condition. — Clear red: Normal — Milky: Water mixed in fluid — Reddish brown: Deteriorated ATF • Is it okay? (See K2–74 Automatic Transaxle Fluid (ATF) Condition Inspection.)	Yes	Go to next step.
		No	If ATF color milky or reddish brown, replace ATF, then go to Step 5. (See K2–75 AUTOMATIC TRANSAXLE FLUID (ATF) REPLACEMENT.)
4	**CHECK ATF LEVEL** • Start engine. • Warm up ATX. • Is ATF level within specification? (See K2–74 Automatic Transaxle Fluid (ATF) Level Inspection.)	Yes	Go to next step.
		No	Adjust ATF level, then go to Step 9. (See K2–74 Automatic Transaxle Fluid (ATF) Level Inspection.)

STEP	INSPECTION		ACTION
5	**INSPECT LINE PRESSURE** • Start engine. • Measure line pressure. **Specification** Idle: **290—490 kPa** **{3.0—4.9 kgf/cm^2,43—69 psi}** Stall: **1,280—1,480 kPa** **{13.1—15.0 kgf/cm^2, 187—213 psi}** • Is line pressure within specification? (See K2–67 Line Pressure Test.)	Yes	Go to next step.
		No	All ranges: Replace or overhaul oil pump or control valve body, then go to Step 10. Any ranges: Replace or overhaul automatic transaxle, then go to Step 10. (See K2–95 AUTOMATIC TRANSAXLE REMOVAL/ INSTALLATION.)
6	**CLICK TEST OF SOLENOID VALVES** • Turn ignition key to OFF. • Disconnect terminal component No.1(12-pin). • Apply battery voltage to terminal component No.1 (12-pin) terminals (transaxle case side). — TCC solenoid vale: B — Pressure control solenoid: D • Verify the click sounds of TCC solenoid valve and pressure control solenoid. • Are there click sounds?	Yes	Go to next step.
		No	Replace TCC solenoid valve or pressure control solenoid, then go to Step 10. (See K2–100 CONTROL VALVE BODY REMOVAL/ INSTALLATION.)
7	**INSPECT DIFFERENCE BETWEEN ENGINE SPEED AND TURBINE SPEED** • Inspect difference between engine speed and turbine speed during TCC operation in 5GR • Drive vehicle under following condition — TR switch position: D range — Gear position: 5GR — TCC solenoid valve: ON • Is difference between engine speed (RPM PID) and turbine speed okay? Difference **Below 99 rpm**	Yes	Go to Step
		No	Go to next step.
8	**INSPECT OPERATION OF EACH VALVE AND EACH SPRING** • Remove control valve body. • Disassemble control valve body. • Is each valve operation okay and is return spring okay?	Yes	Replace torque converter, then go to next step.
		No	Replace control valve body, then go to next step. (See K2–100 CONTROL VALVE BODY REMOVAL/ INSTALLATION.)
9	**VERIFY TROUBLESHOOTING OF DTC P0740 COMPLETED** • Make sure to reconnect all disconnected connectors. • Clear DTC from memory using WDS or equivalent. • Start engine. • Warm up ATX. • Drive vehicle under following condition for 10 seconds or more. — Vehicle speed (VSS PID): **Within 10—87 km/h {6—54 mph}** — Gear position: 5GR — TR switch position: D range — TCC solenoid valve: ON • Is there pending code present?	Yes	Replace TCM, then go to next step. (See K2–94 TCM REMOVAL/INSTALLATION.)
		No	Go to next step.
10	**VERIFY AFTER REPAIR PROCEDURE** • Perform “After Repair Procedure”. (See K2–116 AFTER REPAIR PROCEDURE.) • Is there any DTC present?	Yes	Go to applicable DTC inspection.
		No	Troubleshooting completed.

End Of Sie

DTC P0743

AME577018901W13

DTC P0743	Torque converter clutch (TCC) solenoid valve circuit malfunction (open/short)
DETECTION CONDITION	• Open or short in TCC solenoid signal system (while TCM monitors solenoid output voltage, the voltage that differs from the ON/OFF signal output by CPU in TCM is detected). **Diagnostic support note:** • This is continuous monitor (CCM). • MIL illuminates if TCM detects the above malfunction condition during first drive cycle. • PENDING CODE is not available. • FREEZE FRAME DATA is available. • HOLD lamp flashes. • DTC is stored in TCM memory.
POSSIBLE CAUSE	• Open circuit between TCC solenoid valve terminal A and TCM terminal 2S • Short to ground between TCC solenoid valve terminal A and TCM terminal 2S • Short to power between TCC solenoid valve terminal A and TCM terminal 2S • TCC solenoid valve malfunction • Damage connector between TCC solenoid valve and TCM • TCM malfunction

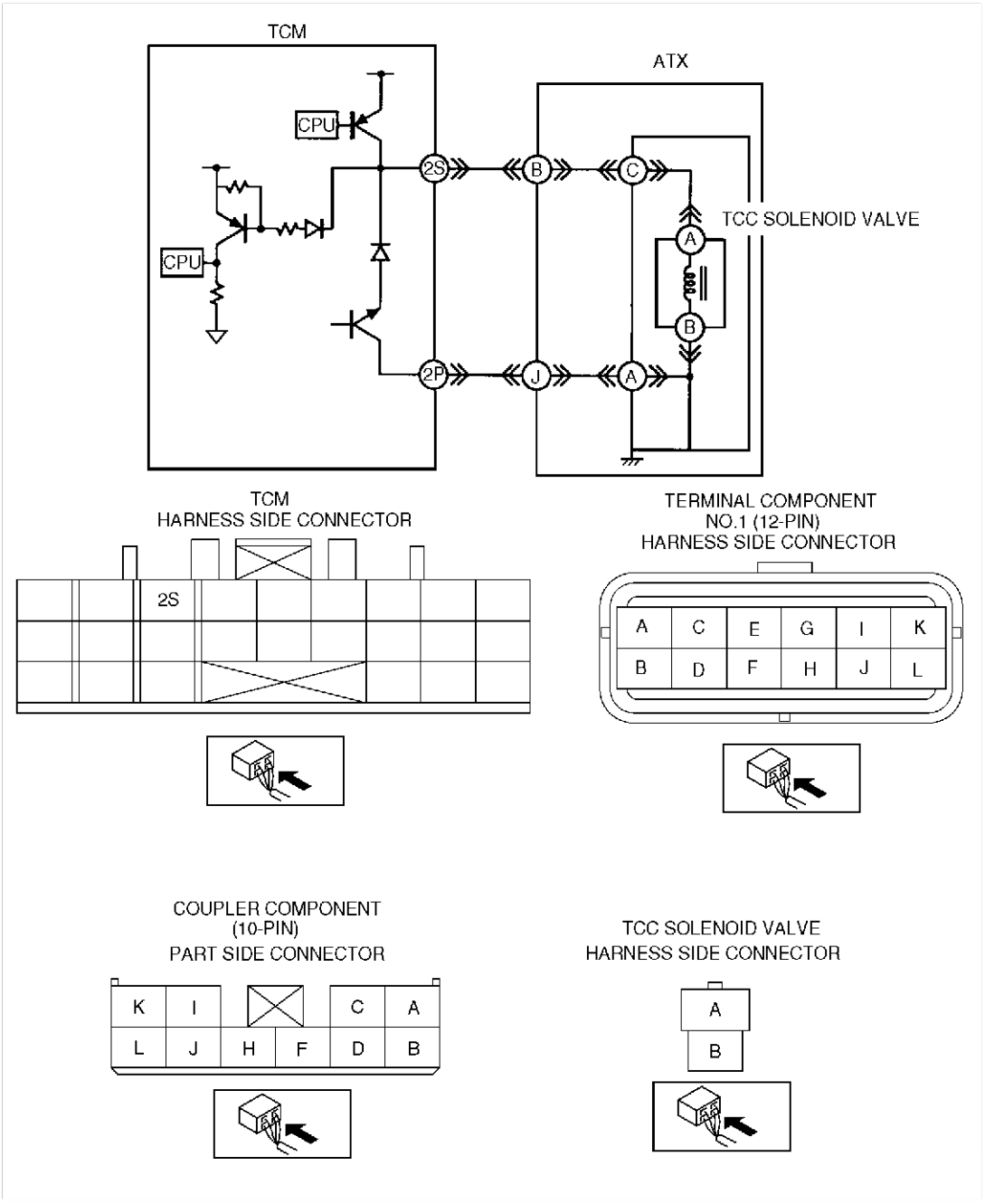

K2

Diagnostic procedure

STEP	INSPECTION		ACTION
1	**VERIFY FREEZE FRAME DATA HAS BEEN RECORDED** • Has FREEZE FRAME PID DATA been recorded?	Yes	Go to next step.
		No	Record FREEZE FRAME PID DATA on repair order, then go to next step.
2	**VERIFY RELATED REPAIR INFORMATION AVAILABILITY** • Check for related Service Bulletins and/or on-line repair information availability. • Is any related repair information available?	Yes	Perform repair or diagnosis according to available repair information. • If vehicle is not repaired, go to next step.
		No	Go to next step.
3	**INSPECT TERMINAL COMPONENT NO.1 (12-PIN) FOR POOR CONNECTION** • Turn ignition key to OFF. • Disconnect terminal componentNo.1 (12-pin). • Check for poor connection (damaged, pulled-out, terminals, corrosion, etc.). • Are terminals okay?	Yes	Go to next step.
		No	Repair or replace terminals, then go to Step 13.
4	**INSPECT RESISTANCE** • Check resistance between terminal component No.1 (12-pin) terminal H (transaxle case side) and body ground. • Is resistance **within 12—13.2 ohms**? (See K2–84 SOLENOID VALVE INSPECTION.)	Yes	Go to Step 9.
		No	Go to next step.
5	**INSPECT COUPLER COMPONENT (10-PIN) FOR POOR CONNECTION** • Disconnect coupler component (10-pin) connector. • Check for poor connection (damaged, pulled-out, terminals, corrosion, etc.). • Is terminal okay?	Yes	Go to next step.
		No	Repair or replace terminal, then go to Step 13.
6	**INSPECT RESISTANCE** • Check resistance between coupler component (10-pin) terminal C (part side) and body ground. • Is resistance **within 12—13.2 ohms**? (See K2–84 SOLENOID VALVE INSPECTION.)	Yes	Repair or replace terminal component No.1 (12-pin), then go to Step 13.
		No	Go to next step.
7	**INSPECT TCC SOLENOID VALVE CONNECTOR FOR POOR CONNECTION** • Disconnect TCC solenoid valve connector. • Check for poor connection (damaged, pulled-out, terminals, corrosion, etc.). • Is terminal okay?	Yes	Go to next step.
		No	Repair or replace terminal, then go to Step 13.
8	**INSPECT RESISTANCE** • Check resistance between TCC solenoid valve connector (part side) terminal A and body ground. • Is resistance **within 12—13.2 ohms**? (See K2–84 SOLENOID VALVE INSPECTION.)	Yes	Repair or replace coupler component (10-pin), then go to Step 13.
		No	Verify TCC solenoid valve installation. • If TCC solenoid valve is installed correctly, replace TCC solenoid valve, then go to Step 13. (See K2–86 SOLENOID VALVE REMOVAL/INSTALLATION.)
9	**INSPECT TCM CONNECTOR FOR POOR CONNECTION** • Disconnect TCM connector. • Check for poor connection (damaged, pulled-out, terminals, corrosion, etc.). • Are terminals okay?	Yes	Go to next step.
		No	Repair terminals, then go to Step 13.
10	**INSPECT TERMINAL COMPONENT NO.1 (12-PIN) CIRCUIT FOR OPEN CIRCUIT** • Check continuity between TCM terminal 2S (harness-side) and terminal component No.1 (12-pin) terminal H (harness-side). • Is there continuity between terminals?	Yes	Go to next step.
		No	Repair or replace harness, then go to Step 13.

STEP	INSPECTION		ACTION
11	**INSPECT TERMINAL COMPONENT NO.1 (12-PIN) CIRCUIT FOR SHORT TO POWER** • Turn ignition key to ON (engine OFF). • Check voltage at terminal component No.1 (12-pin) terminal H (harness-side). • Is voltage **0 V**?	Yes	Go to next step.
		No	Repair or replace harness, then go to Step 13.
12	**INSPECT TCM CIRCUIT FOR SHORT TO GROUND** • Turn ignition key to OFF. • Check continuity between TCM terminal 2S (harness-side) and body ground. • Is there any continuity?	Yes	Repair or replace harness, then go to next step.
		No	Go to next step.
13	**VERIFY TROUBLESHOOTING OF DTC P0743 COMPLETED** • Make sure to reconnect all disconnected connectors. • Clear DTC from memory using WDS or equivalent. • Drive vehicle in D range and make sure that gears shift smoothly from 1GR to 5GR. • Is same DTC present?	Yes	Replace TCM, then go to next step. (See K2–94 TCM REMOVAL/INSTALLATION.)
		No	Go to next step.
14	**VERIFY AFTER REPAIR PROCEDURE** • Perform “After Repair Procedure”. (See K2–116 AFTER REPAIR PROCEDURE.) • Is there any DTC present?	Yes	Go to applicable DTC inspection.
		No	Troubleshooting completed.

End Of Ste

DTC P0748

AME577018901W14

DTC P0748	Pressure control solenoid circuit malfunction (open/short)
DETECTION CONDITION	• Open or short in pressure control solenoid signal system (while TCM monitors solenoid output voltage, the voltage that differs from the ON/OFF signal output by CPU in TCM is detected). **Diagnostic support note:** • This is a continuous monitor (CCM). • MIL does not illuminate. • PENDING CODE is not available. • FREEZE FRAME DATA is not available. • HOLD lamp flashes. • DTC is stored in TCM memory.
POSSIBLE CAUSE	• Open circuit between pressure control solenoid terminal A and TCM terminal 2Y • Short to ground between pressure control solenoid terminal A and TCM terminal 2Y • Short to power between pressure control solenoid terminal A and TCM terminal 2Y • Pressure control solenoid malfunction • Damaged connector between pressure control solenoid valve and TCM • TCM malfunction

DTC P0748	Pressure control solenoid circuit malfunction (open/short)

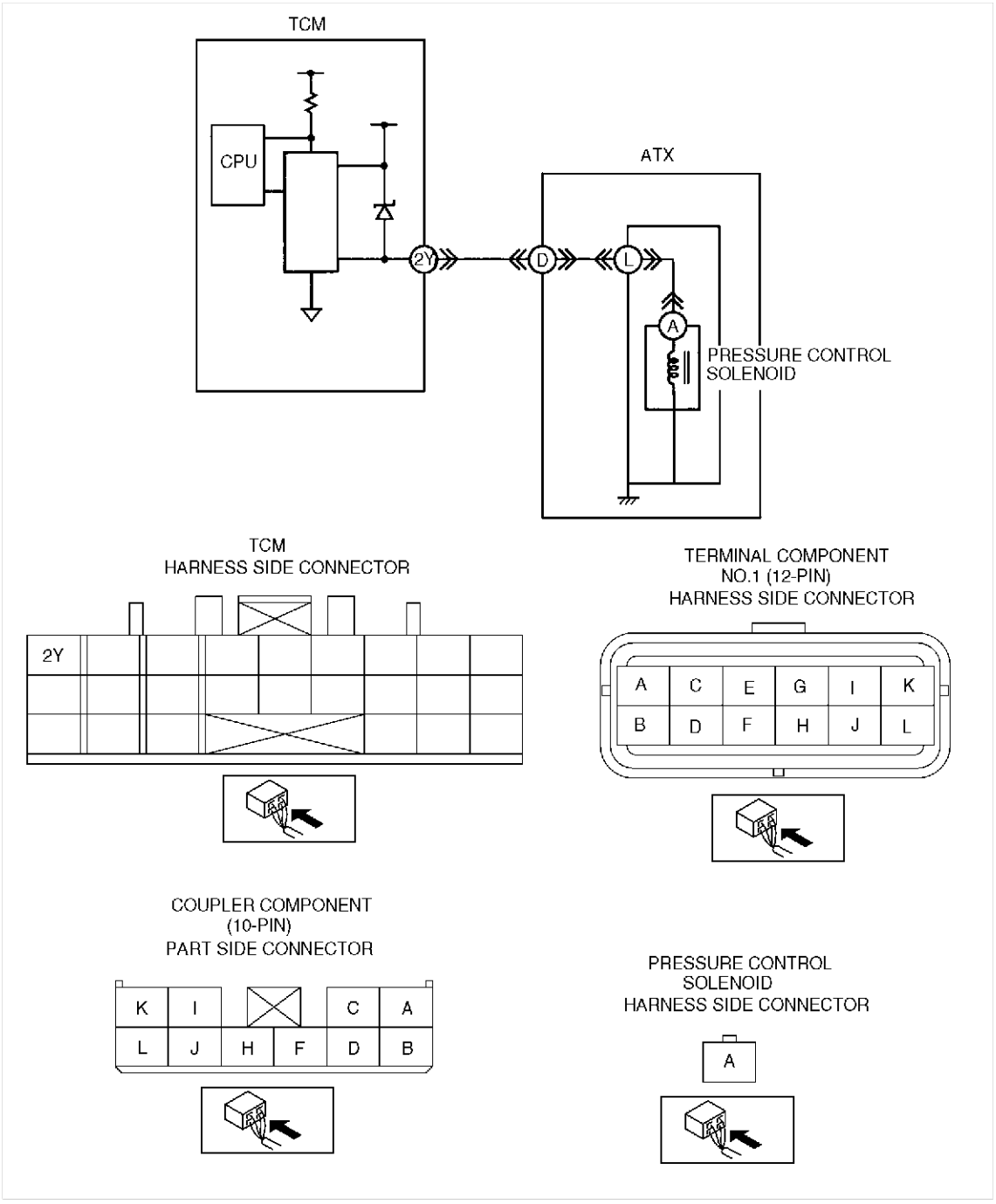

Diagnostic procedure

STEP	INSPECTION		ACTION
1	**VERIFY RELATED REPAIR INFORMATION AVAILABILITY** • Check for related Service Bulletins and/or on-line repair information availability. • Is any related repair information available?	Yes	Perform repair or diagnosis according to available repair information. • If vehicle is not repaired, go to next step.
		No	Go to next step.
2	**INSPECT TERMINAL COMPONENT NO.1 (12-PIN) FOR POOR CONNECTION** • Turn ignition key to OFF. • Disconnect terminal componentNo.1 (12-pin). • Check for poor connection (damaged, pulled-out, terminals, corrosion, etc.). • Are terminals okay?	Yes	Go to next step.
		No	Repair or replace terminals, then go to Step 12.

STEP	INSPECTION		ACTION
3	**INSPECT RESISTANCE** • Check resistance between terminal component No.1 (12-pin) terminal D (transaxle case side) and body ground. • Is resistance **within 2.6—3.2 ohms**? (See K2–84 SOLENOID VALVE INSPECTION.)	Yes	Go to Step 8.
		No	Go to next step.
4	**INSPECT COUPLER COMPONENT (10-PIN) FOR POOR CONNECTION** • Disconnect coupler component (10-pin) connector. • Check for poor connection (damaged, pulled-out, terminals, corrosion, etc.). • Is terminal okay?	Yes	Go to next step.
		No	Repair or replace terminal, then go to Step 12.
5	**INSPECT RESISTANCE** • Check resistance between coupler component (10-pin) terminal L (part side) and body ground. • Is resistance **within 2.6—3.2 ohms**? (See K2–84 SOLENOID VALVE INSPECTION.)	Yes	Repair or replace terminal component No.1 (12-pin), then go to Step 12.
		No	Go to next step.
6	**INSPECT PRESSURE CONTROL SOLENOID CONNECTOR FOR POOR CONNECTION** • Disconnect pressure control solenoid connector. • Check for poor connection (damaged, pulled-out, terminals, corrosion, etc.). • Is terminal okay?	Yes	Go to next step.
		No	Repair or replace terminal, then go to Step 12.
7	**INSPECT RESISTANCE** • Check resistance between pressure control solenoid connector (part side) terminal A and body ground. • Is resistance **within 2.6—3.2 ohms**? (See K2–84 SOLENOID VALVE INSPECTION.)	Yes	Repair or replace coupler component (10-pin), then go to Step 12.
		No	Verify pressure control solenoid installation. • If pressure control solenoid is installed correctly, replace pressure control solenoid, then go to Step 12 (See K2–86 SOLENOID VALVE REMOVAL/INSTALLATION.)
8	**INSPECT TCM CONNECTOR FOR POOR CONNECTION** • Disconnect TCM connector. • Check for poor connection (damaged, pulled-out, terminals, corrosion, etc.). • Are terminals okay?	Yes	Go to next step.
		No	Repair terminals, then go to Step 12.
9	**INSPECT TERMINAL COMPONENT NO.1 (12-PIN) CIRCUIT FOR OPEN CIRCUIT** • Check continuity between TCM terminal 2Y (harness-side) and terminal component No.1 (12-pin) terminal D (harness-side). • Is there continuity between terminals?	Yes	Go to next step.
		No	Repair or replace harness, then go to Step 12.
10	**INSPECT TERMINAL COMPONENT NO.1 (12-PIN) CIRCUIT FOR SHORT TO POWER** • Turn ignition key to ON (engine OFF). • Check voltage at terminal component No.1 (12-pin) terminal D (harness-side). • Is voltage **0 V**?	Yes	Go to next step.
		No	Repair or replace harness, then go to Step 12.
11	**INSPECT TCM CIRCUIT FOR SHORT TO GROUND** • Turn ignition key to OFF. • Check continuity between TCM terminal 2Y (harness-side) and body ground. • Is there any continuity?	Yes	Repair or replace harness, then go to next step.
		No	Go to next step.
12	**VERIFY TROUBLESHOOTING OF DTC P0748 COMPLETED** • Make sure to reconnect all disconnected connectors. • Clear DTC from memory using WDS or equivalent. • Drive vehicle in D range and make sure that gears shift smoothly from 1GR to 5GR. • Is same DTC present?	Yes	Replace TCM, then go to next step. (See K2–94 TCM REMOVAL/INSTALLATION.)
		No	Go to next step.

STEP	INSPECTION		ACTION
13	**VERIFY AFTER REPAIR PROCEDURE** • Perform “After Repair Procedure”. (See K2–116 AFTER REPAIR PROCEDURE.) • Is there any DTC present?	Yes	Go to applicable DTC inspection.
		No	Troubleshooting completed.

End Of Sie

DTC P0751 (ISRAELI SPECS.)

AME577018901W15

DTC P0751	Shift solenoid A malfunction (stuck off)
DETECTION CONDITION	• Difference between actual gear ratio and gear ratio set in TCM is large. **Diagnostic support note:** • This is a continuous monitor (CCM). • MIL illuminates if TCM detects the above malfunction condition. • PENDING CODE is not available. • FREEZE FRAME DATA is available. • HOLD lamp does not flash. • DTC is stored in TCM memory.
POSSIBLE CAUSE	• Shift solenoid A malfunction • Shift valve A stuck • TCM malfunction

Diagnostic procedure

STEP	INSPECTION		ACTION
1	**VERIFY FREEZE FRAME DATA HAS BEEN RECORDED** • Has FREEZE FRAME PID DATA been recorded?	Yes	Go to next step.
		No	Record FREEZE FRAME PID DATA on repair order, then go to next step.
2	**VERIFY RELATED REPAIR INFORMATION AVAILABILITY** • Check for related Service Bulletins and/or on-line repair information availability. • Is any related repair information available?	Yes	Perform repair or diagnosis according to available repair information. • If vehicle is not repaired, go to next step.
		No	Go to next step.
3	**CHECK FOR DTC** • Turn ignition key to ON (engine OFF). • Inspect DTC. • Is DTC outputted?	Yes	Follow applicable DTC inspection procedure.
		No	Go to next step.
4	**CHECK ATF CONDITION** • Turn ignition key to OFF. • Check ATF condition. — Transparent red: Normal — Milky: Water mixed in fluid — Reddish brown: Deteriorated ATF • Is it okay? (See K2–74 Automatic Transaxle Fluid (ATF) Condition Inspection.)	Yes	replace control valve body, then go to next step.
		No	If ATF color milky or reddish brown, reaper or replace ATX, then go to next step.
5	**VERIFY TROUBLESHOOTING OF DTC P0751 COMPLETED.** • Make sure to reconnect all disconnected connectors. • Clear DTC from memory using WDS or equivalent. • Start engine. • Warm up ATX. • Drive vehicle in D range and make sure that gears shift smoothly from 1GR to 5GR. • Is same DTC present?	Yes	Replace TCM, then go to next step. (See K2–94 TCM REMOVAL/INSTALLATION.)
		No	Go to next step.
6	**VERIFY AFTER REPAIR PROCEDURE** • Perform “After Repair Procedure”. (See K2–116 AFTER REPAIR PROCEDURE.) • Is there any DTC present?	Yes	Go to applicable DTC inspection.
		No	Troubleshooting completed.

End Of Sie

DTC P0752 (ISRAELI SPECS.)

AME577018901W16

DTC P0752	Shift solenoid A malfunction (stuck on)
DETECTION CONDITION	• Difference between actual gear ratio and gear ratio set in TCM is large. **Diagnostic support note:** • This is a continuous monitor (CCM). • MIL illuminates if TCM detects the above malfunction. • PENDING CODE is not available. • FREEZE FRAME DATA is available. • HOLD lamp does not flash. • DTC is stored in TCM memory.
POSSIBLE CAUSE	• Shift solenoid A malfunction • Shift valve A stuck • TCM malfunction

Diagnostic procedure

STEP	INSPECTION		ACTION
1	**VERIFY FREEZE FRAME DATA HAS BEEN RECORDED** • Has FREEZE FRAME PID DATA been recorded?	Yes	Go to next step.
		No	Record FREEZE FRAME PID DATA on repair order, then go to next step.
2	**VERIFY RELATED REPAIR INFORMATION AVAILABILITY** • Check for related Service Bulletins and/or on-line repair information availability. • Is any related repair information available?	Yes	Perform repair or diagnosis according to available repair information. • If vehicle is not repaired, go to next step.
		No	Go to next step.
3	**CHECK FOR DTC** • Turn ignition key to ON (engine OFF). • Inspect DTC. • Is DTC outputted?	Yes	Follow applicable DTC inspection procedure.
		No	Go to next step.
4	**CHECK ATF CONDITION** • Turn ignition key to OFF. • Check ATF condition. — Transparent red: Normal — Milky: Water mixed in fluid — Reddish brown: Deteriorated ATF • Is it okay? (See K2–74 Automatic Transaxle Fluid (ATF) Condition Inspection.)	Yes	replace control valve body, then go to next step.
		No	If ATF color milky or reddish brown, reaper or replace ATX, then go to next step.
5	**VERIFY TROUBLESHOOTING OF DTC P0752 COMPLETED.** • Make sure to reconnect all disconnected connectors. • Clear DTC from memory using WDS or equivalent. • Start engine. • Warm up ATX. • Drive vehicle in D range and make sure that gears shift smoothly from 1GR to 5GR. • Is same DTC present?	Yes	Replace TCM, then go to next step. (See K2–94 TCM REMOVAL/INSTALLATION.)
		No	Go to next step.
6	**VERIFY AFTER REPAIR PROCEDURE** • Perform “After Repair Procedure”. (See K2–116 AFTER REPAIR PROCEDURE.) • Is there any DTC present?	Yes	Go to applicable DTC inspection.
		No	Troubleshooting completed.

End Of Ste

DTC P0753

AME577018901W17

DTC P0753	Shift solenoid A circuit malfunction (open/short)
DETECTION CONDITION	• Open or short in shift solenoid A signal system (while TCM monitors solenoid output voltage, the voltage that differs from the ON/OFF signal output by CPU in TCM is detected). **Diagnostic support note:** • This is a continuous monitor (CCM). • MIL illuminates if TCM detects the above malfunction condition during first drive cycle. • PENDING CODE is not available. • FREEZE FRAME DATA is available. • HOLD lamp flashes. • DTC is stored in TCM memory.
POSSIBLE CAUSE	• Open circuit between shift solenoid A terminal A and TCM terminal 2W • Short to ground between shift solenoid A terminal A and TCM terminal 2W • Short to power between shift solenoid A terminal A and TCM terminal 2W • Shift solenoid A malfunction • Damage connector between shift solenoid A and TCM • TCM malfunction

DTC P0753	Shift solenoid A circuit malfunction (open/short)

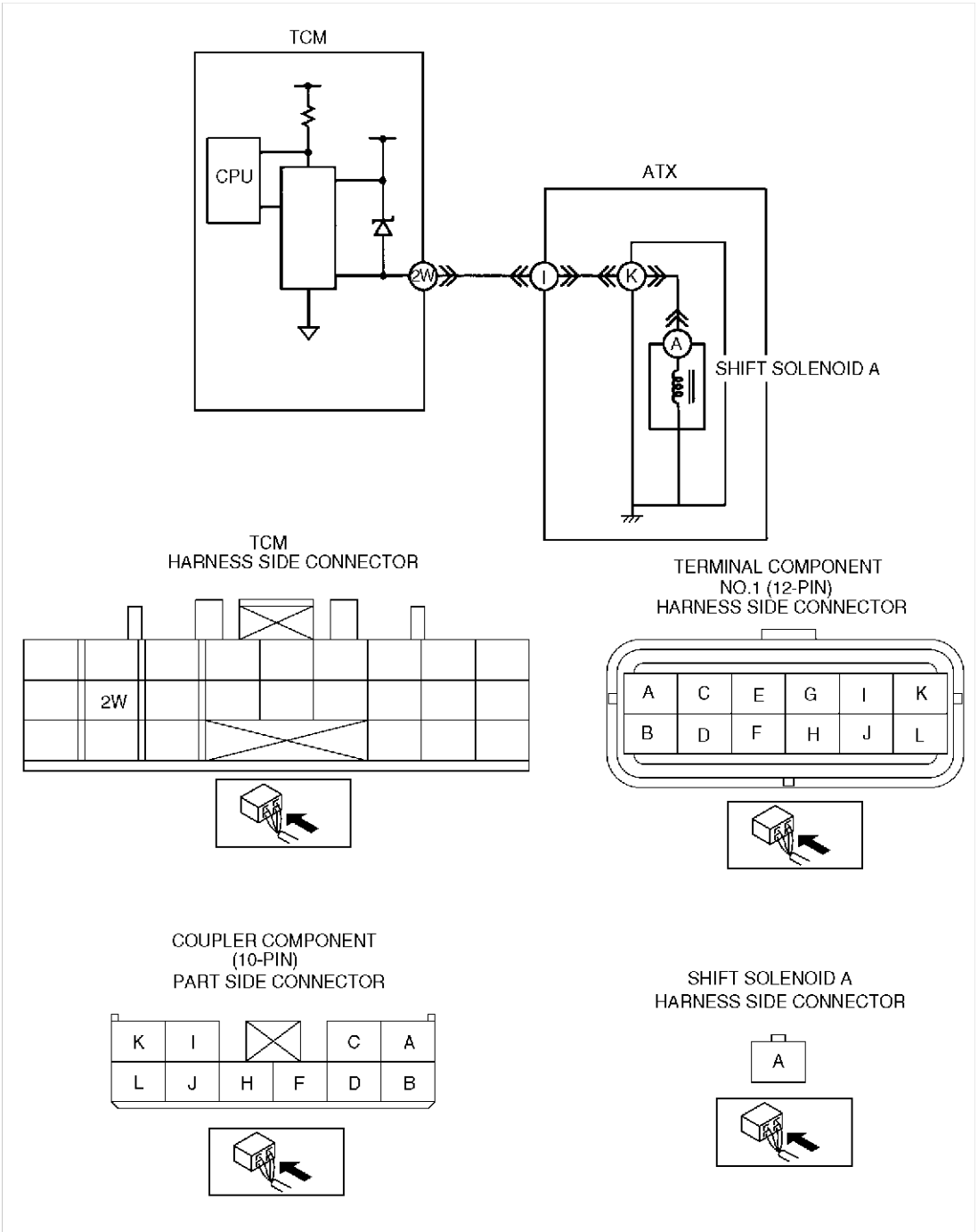

Diagnostic procedure

STEP	INSPECTION		ACTION
1	**VERIFY FREEZE FRAME DATA HAS BEEN RECORDED** • Has FREEZE FRAME PID DATA been recorded?	Yes	Go to next step.
		No	Record FREEZE FRAME PID DATA on repair order, then go to next step.
2	**VERIFY RELATED REPAIR INFORMATION AVAILABILITY** • Check for related Service Bulletins and/or on-line repair information availability. • Is any related repair information available?	Yes	Perform repair or diagnosis according to available repair information. • If vehicle is not repaired, go to next step.
		No	Go to next step.

K2

STEP	INSPECTION		ACTION
3	**INSPECT TERMINAL COMPONENT NO.1 (12-PIN) FOR POOR CONNECTION** • Turn ignition key to OFF. • Disconnect terminal componentNo.1 (12-pin). • Check for poor connection (damaged, pulled-out, terminals, corrosion, etc.). • Are terminals okay?	Yes	Go to next step.
		No	Repair or replace terminals, then go to Step 13.
4	**INSPECT RESISTANCE** • Check resistance between terminal component No.1 (12-pin) terminal I (transaxle case side) and body ground. • Is resistance **within 14—18 ohms**? (See K2–84 SOLENOID VALVE INSPECTION.)	Yes	Go to Step 9.
		No	Go to next step.
5	**INSPECT COUPLER COMPONENT (10-PIN) FOR POOR CONNECTION** • Disconnect coupler component (10-pin) connector. • Check for poor connection (damaged, pulled-out, terminals, corrosion, etc.). • Is terminal okay?	Yes	Go to next step.
		No	Repair or replace terminal, then go to Step 13.
6	**INSPECT RESISTANCE** • Check resistance between coupler component (10-pin) terminal K (part side) and body ground. • Is resistance **within 14—18 ohms**? (See K2–84 SOLENOID VALVE INSPECTION.)	Yes	Repair or replace terminal component No.1 (12-pin), then go to Step 13.
		No	Go to next step.
7	**INSPECT SHIFT SOLENOID A CONNECTOR FOR POOR CONNECTION** • Disconnect shift solenoid A connector. • Check for poor connection (damaged, pulled-out, terminals, corrosion, etc.). • Is terminal okay?	Yes	Go to next step.
		No	Repair or replace terminal, then go to Step 13.
8	**INSPECT RESISTANCE** • Check resistance between shift solenoid A connector terminal A (part side) and body ground. • Is resistance **within 14—18 ohms**? (See K2–84 SOLENOID VALVE INSPECTION.)	Yes	Repair or replace coupler component (10-pin), then go to Step 13.
		No	Verify shift solenoid A installation. • If shift solenoid A is installed correctly, replace shift solenoid A, then go to Step 13 (See K2–86 SOLENOID VALVE REMOVAL/INSTALLATION.)
9	**INSPECT TCM CONNECTOR FOR POOR CONNECTION** • Disconnect TCM connector. • Check for poor connection (damaged, pulled-out, terminals, corrosion, etc.). • Are terminals okay?	Yes	Go to next step.
		No	Repair terminals, then go to Step 13.
10	**INSPECT TERMINAL COMPONENT NO.1 (12-PIN) CIRCUIT FOR OPEN CIRCUIT** • Check continuity between TCM terminal 2W (harness-side) and terminal component No.1 (12-pin) terminal I (harness-side). • Is there continuity between terminals?	Yes	Go to next step.
		No	Repair or replace harness, then go to Step 13.
11	**INSPECT TERMINAL COMPONENT NO.1 (12-PIN) CIRCUIT FOR SHORT TO POWER** • Turn ignition key to ON (engine OFF). • Check voltage at terminal component No.1 (12-pin) terminal I (harness-side). • Is voltage **0 V**?	Yes	Go to next step.
		No	Repair or replace harness, then go to Step 13.
12	**INSPECT TCM CIRCUIT FOR SHORT TO GROUND** • Turn ignition key to OFF. • Check continuity between TCM terminal 2W (harness-side) and body ground. • Is there any continuity?	Yes	Repair or replace harness, then go to next step.
		No	Go to next step.

STEP	INSPECTION		ACTION
13	**VERIFY TROUBLESHOOTING OF DTC P0753 COMPLETED** • Make sure to reconnect all disconnected connectors. • Clear DTC from memory using WDS or equivalent. • Drive vehicle in D range and make sure that gears shift smoothly from 1GR to 5GR. • Is same DTC present?	Yes	Replace TCM, then go to next step. (See K2–94 TCM REMOVAL/INSTALLATION.)
		No	Go to next step.
14	**VERIFY AFTER REPAIR PROCEDURE** • Perform “After Repair Procedure”. (See K2–116 AFTER REPAIR PROCEDURE.) • Is there any DTC present?	Yes	Go to applicable DTC inspection.
		No	Troubleshooting completed.

End Of Sie

DTC P0756 (ISRAELI SPECS.)

AME577018901W18

DTC P0756	Shift solenoid B malfunction (stuck off)
DETECTION CONDITION	• Difference between actual gear ratio and gear ratio set in TCM is large. **Diagnostic support note:** • This is a continuous monitor (CCM). • MIL illuminates if TCM detects the above malfunction condition. • PENDING CODE is not available. • FREEZE FRAME DATA is available. • HOLD lamp does not flashes. • DTC is stored in TCM memory.
POSSIBLE CAUSE	• Shift solenoid B malfunction. • Shift valve B stuck • TCM malfunction

Diagnostic procedure

STEP	INSPECTION		ACTION
1	**VERIFY FREEZE FRAME DATA HAS BEEN RECORDED** • Has FREEZE FRAME PID DATA been recorded?	Yes	Go to next step.
		No	Record FREEZE FRAME PID DATA on repair order, then go to next step.
2	**VERIFY RELATED REPAIR INFORMATION AVAILABILITY** • Check for related Service Bulletins and/or on-line repair information availability. • Is any related repair information available?	Yes	Perform repair or diagnosis according to available repair information. • If vehicle is not repaired, go to next step.
		No	Go to next step.
3	**CHECK FOR DTC** • Turn ignition key to ON (engine OFF). • Inspect DTC. • Is DTC outputted?	Yes	Follow applicable DTC inspection procedure.
		No	Go to next step.
4	**CHECK ATF CONDITION** • Turn ignition key to OFF. • Check ATF condition. — Transparent red: Normal — Milky: Water mixed in fluid — Reddish brown: Deteriorated ATF • Is it okay? (See K2–74 Automatic Transaxle Fluid (ATF) Condition Inspection.)	Yes	replace control valve body, then go to next step.
		No	If ATF color milky or reddish brown, reaper or replace ATX, then go to next step.
5	**VERIFY TROUBLESHOOTING OF DTC P0756 COMPLETED.** • Make sure to reconnect all disconnected connectors. • Clear DTC from memory using WDS or equivalent. • Start engine. • Warm up ATX. • Drive vehicle in D range and make sure that gears shift smoothly from 1GR to 5GR. • Is same DTC present?	Yes	Replace TCM, then go to next step. (See K2–94 TCM REMOVAL/INSTALLATION.)
		No	Go to next step.

STEP	INSPECTION		ACTION
6	**VERIFY AFTER REPAIR PROCEDURE** • Perform “After Repair Procedure”. (See K2–116 AFTER REPAIR PROCEDURE.) • Is there any DTC present?	Yes	Go to applicable DTC inspection.
		No	Troubleshooting completed.

End Of Sie

DTC P0757 (ISRAELI SPECS.)

AME577018901W19

DTC P0757	Shift solenoid B malfunction (stuck on)
DETECTION CONDITION	• Difference between actual gear ratio and gear ratio set in TCM is large. **Diagnostic support note:** • This is a continuous monitor (CCM). • MIL illuminates if TCM detects the above malfunction condition. • PENDING CODE is not available. • FREEZE FRAME DATA is available. • HOLD lamp does not flash. • DTC is stored in TCM memory.
POSSIBLE CAUSE	• Shift solenoid B malfunction. • Shift valve B stuck • TCM malfunction

Diagnostic procedure

STEP	INSPECTION		ACTION
1	**VERIFY FREEZE FRAME DATA HAS BEEN RECORDED** • Has FREEZE FRAME PID DATA been recorded?	Yes	Go to next step.
		No	Record FREEZE FRAME PID DATA on repair order, then go to next step.
2	**VERIFY RELATED REPAIR INFORMATION AVAILABILITY** • Check for related Service Bulletins and/or on-line repair information availability. • Is any related repair information available?	Yes	Perform repair or diagnosis according to available repair information. • If vehicle is not repaired, go to next step.
		No	Go to next step.
3	**CHECK FOR DTC** • Turn ignition key to ON (engine OFF). • Inspect DTC. • Is DTC outputted?	Yes	Follow applicable DTC inspection procedure.
		No	Go to next step.
4	**CHECK ATF CONDITION** • Turn ignition key to OFF. • Check ATF condition. — Transparent red: Normal — Milky: Water mixed in fluid — Reddish brown: Deteriorated ATF • Is it okay? (See K2–74 Automatic Transaxle Fluid (ATF) Condition Inspection.)	Yes	replace control valve body, then go to next step.
		No	If ATF color milky or reddish brown, reaper or replace ATX, then go to next step.
5	**VERIFY TROUBLESHOOTING OF DTC P0757 COMPLETED.** • Make sure to reconnect all disconnected connectors. • Clear DTC from memory using WDS or equivalent. • Start engine. • Warm up ATX. • Drive vehicle in D range and make sure that gears shift smoothly from 1GR to 5GR. • Is same DTC present?	Yes	Replace TCM, then go to next step. (See K2–94 TCM REMOVAL/INSTALLATION.)
		No	Go to next step.
6	**VERIFY AFTER REPAIR PROCEDURE** • Perform “After Repair Procedure”. (See K2–116 AFTER REPAIR PROCEDURE.) • Is there any DTC present?	Yes	Go to applicable DTC inspection.
		No	Troubleshooting completed.

End Of Sie

DTC P0758

AME577018901W20

DTC P0758	Shift solenoid B circuit malfunction (open/short)
DETECTION CONDITION	• Open or short in shift solenoid B signal system (while TCM monitors solenoid output voltage, the voltage that differs from the ON/OFF signal output by CPU in TCM is detected). **Diagnostic support note:** • This is a continuous monitor (CCM). • MIL illuminates if TCM detects the above malfunction conditions during first drive cycle. • PENDING CODE is not available. • FREEZE FRAME DATA is available. • HOLD lamp flashes. • DTC is stored in TCM memory.
POSSIBLE CAUSE	• Open circuit between shift solenoid B terminal A and TCM terminal 2T • Short to ground between shift solenoid B terminal A and TCM terminal 2T • Short to power between shift solenoid B terminal A and TCM terminal 2T • Shift solenoid B malfunction • Damage connector between shift solenoid B and TCM • TCM malfunction

DTC P0758	Shift solenoid B circuit malfunction (open/short)

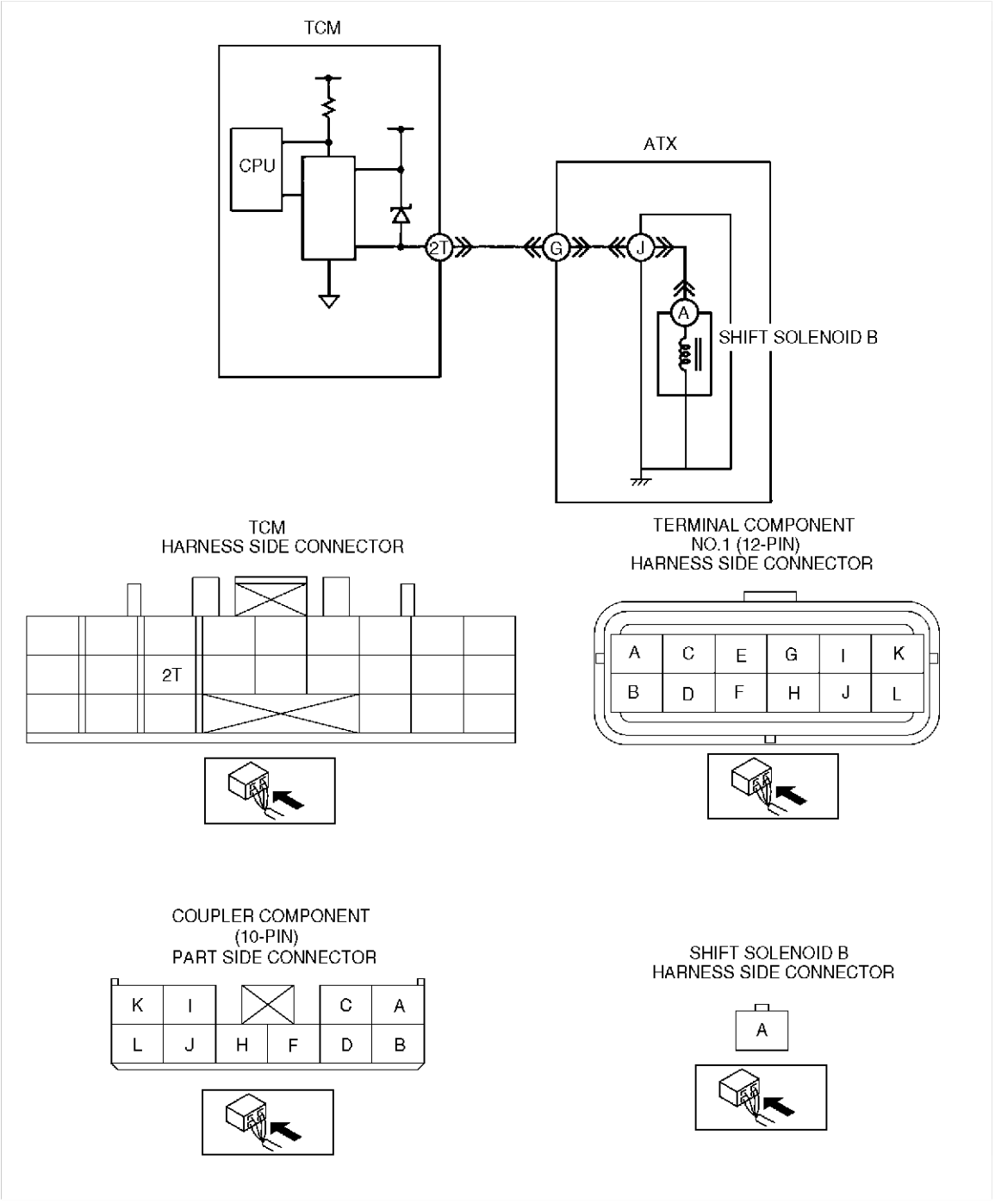

Diagnostic procedure

STEP	INSPECTION		ACTION
1	**VERIFY FREEZE FRAME DATA HAS BEEN RECORDED** • Has FREEZE FRAME PID DATA been recorded?	Yes	Go to next step.
		No	Record FREEZE FRAME PID DATA on repair order, then go to next step.
2	**VERIFY RELATED REPAIR INFORMATION AVAILABILITY** • Check for related Service Bulletins and/or on-line repair information availability. • Is any related repair information available?	Yes	Perform repair or diagnosis according to available repair information. • If vehicle is not repaired, go to next step.
		No	Go to next step.

STEP	INSPECTION		ACTION
3	**INSPECT TERMINAL COMPONENT NO.1 (12-PIN) FOR POOR CONNECTION** • Turn ignition key to OFF. • Disconnect terminal component No.1 (12-pin). • Check for poor connection (damaged, pulled-out, terminals, corrosion, etc.). • Are terminals okay?	Yes	Go to next step.
		No	Repair or replace terminals, then go to Step 13.
4	**INSPECT RESISTANCE** • Check resistance between terminal component No.1 (12-pin) terminal G (transaxle case side) and body ground. • Is resistance **within 14—18 ohms**? (See K2–84 SOLENOID VALVE INSPECTION.)	Yes	Go to Step 9.
		No	Go to next step.
5	**INSPECT COUPLER COMPONENT (10-PIN) FOR POOR CONNECTION** • Disconnect coupler component (10-pin) connector. • Check for poor connection (damaged, pulled-out, terminals, corrosion, etc.). • Is terminal okay?	Yes	Go to next step.
		No	Repair or replace terminal, then go to Step 13.
6	**INSPECT RESISTANCE** • Check resistance between coupler component (10-pin) terminal J (part side) and body ground. • Is resistance **within 14—18 ohms**? (See K2–84 SOLENOID VALVE INSPECTION.)	Yes	Repair or replace terminal component No.1 (12-pin), then go to Step 13.
		No	Go to next step.
7	**INSPECT SHIFT SOLENOID B CONNECTOR FOR POOR CONNECTION** • Disconnect shift solenoid B connector. • Check for poor connection (damaged, pulled-out, terminals, corrosion, etc.). • Is terminal okay?	Yes	Go to next step.
		No	Repair or replace terminal, then go to Step 13.
8	**INSPECT RESISTANCE** • Check resistance between shift solenoid B connector terminal A (part side) and body ground. • Is resistance **within 14—18 ohms**? (See K2–84 SOLENOID VALVE INSPECTION.)	Yes	Repair or replace coupler component (10-pin), then go to Step 13.
		No	Verify shift solenoid B installation. • If shift solenoid B is installed correctly, replace shift solenoid B, then go to Step 13 (See K2–86 SOLENOID VALVE REMOVAL/INSTALLATION.)
9	**INSPECT TCM CONNECTOR FOR POOR CONNECTION** • Disconnect TCM connector. • Check for poor connection (damaged, pulled-out, terminals, corrosion, etc.). • Are terminals okay?	Yes	Go to next step.
		No	Repair terminals, then go to Step 13.
10	**INSPECT TERMINAL COMPONENT NO.1 (12-PIN) CIRCUIT FOR OPEN CIRCUIT** • Check continuity between TCM terminal 2T (harness-side) and terminal component No.1 (12-pin) terminal G (harness-side). • Is there continuity between terminals?	Yes	Go to next step.
		No	Repair or replace harness, then go to Step 13.
11	**INSPECT TERMINAL COMPONENT NO.1 (12-PIN) CIRCUIT FOR SHORT TO POWER** • Turn ignition key to ON (engine OFF). • Check voltage at terminal component No.1 (12-pin) terminal G (harness-side). • Is voltage **0 V**?	Yes	Go to next step.
		No	Repair or replace harness, then go to Step 13.
12	**INSPECT TCM CIRCUIT FOR SHORT TO GROUND** • Turn ignition key to OFF. • Check continuity between TCM terminal 2T (harness-side) and body ground. • Is there any continuity?	Yes	Repair or replace harness, then go to next step.
		No	Go to next step.

STEP	INSPECTION		ACTION
13	**VERIFY TROUBLESHOOTING OF DTC P0758 COMPLETED** • Make sure to reconnect all disconnected connectors. • Clear DTC from memory using WDS or equivalent. • Drive vehicle in D range and make sure that gears shift smoothly from 1GR to 5GR. • Is same DTC present?	Yes	Replace TCM, then go to next step. (See K2–94 TCM REMOVAL/INSTALLATION.)
		No	Go to next step.
14	**VERIFY AFTER REPAIR PROCEDURE** • Perform “After Repair Procedure”. (See K2–116 AFTER REPAIR PROCEDURE.) • Is there any DTC present?	Yes	Go to applicable DTC inspection.
		No	Troubleshooting completed.

End Of Sie

DTC P0761 (ISRAELI SPECS.)

AME577018901W21

DTC P0761	Shift solenoid C malfunction (stuck off)
DETECTION CONDITION	• Difference between actual gear ratio and gear ratio set in TCM is large. **Diagnostic support note:** • This is a continuous monitor (CCM). • MIL illuminates if TCM detects the above malfunction condition. • PENDING CODE is not available. • FREEZE FRAME DATA is available. • HOLD lamp does not flash. • DTC is stored in TCM memory.
POSSIBLE CAUSE	• Shift solenoid C malfunction • Shift valve C stuck • TCM malfunction

Diagnostic procedure

STEP	INSPECTION		ACTION
1	**VERIFY FREEZE FRAME DATA HAS BEEN RECORDED** • Has FREEZE FRAME PID DATA been recorded?	Yes	Go to next step.
		No	Record FREEZE FRAME PID DATA on repair order, then go to next step.
2	**VERIFY RELATED REPAIR INFORMATION AVAILABILITY** • Check for related Service Bulletins and/or on-line repair information availability. • Is any related repair information available?	Yes	Perform repair or diagnosis according to available repair information. • If vehicle is not repaired, go to next step.
		No	Go to next step.
3	**CHECK FOR DTC** • Turn ignition key to ON (engine OFF). • Inspect DTC. • Is DTC outputted?	Yes	Follow applicable DTC inspection procedure.
		No	Go to next step.
4	**CHECK ATF CONDITION** • Turn ignition key to OFF. • Check ATF condition. — Transparent red: Normal — Milky: Water mixed in fluid — Reddish brown: Deteriorated ATF • Is it okay? (See K2–74 Automatic Transaxle Fluid (ATF) Condition Inspection.)	Yes	replace control valve body, then go to next step.
		No	If ATF color milky or reddish brown, reaper or replace ATX, then go to next step.
5	**VERIFY TROUBLESHOOTING OF DTC P0761 COMPLETED.** • Make sure to reconnect all disconnected connectors. • Clear DTC from memory using WDS or equivalent. • Start engine. • Warm up ATX. • Drive vehicle in D range and make sure that gears shift smoothly from 1GR to 5GR. • Is same DTC present?	Yes	Replace TCM, then go to next step. (See K2–94 TCM REMOVAL/INSTALLATION.)
		No	Go to next step.

STEP	INSPECTION		ACTION
6	**VERIFY AFTER REPAIR PROCEDURE** • Perform “After Repair Procedure”. (See K2–116 AFTER REPAIR PROCEDURE.) • Is there any DTC present?	Yes	Go to applicable DTC inspection.
		No	Troubleshooting completed.

End Of Ste

DTC P0762 (ISRAELI SPECS.)

AME577018901W22

DTC P0762	Shift solenoid C malfunction (stuck on)
DETECTION CONDITION	• Difference between actual gear ratio and gear ratio set in TCM is large. **Diagnostic support note:** • This is continuous monitor (CCM). • MIL illuminates if TCM detects the above malfunction condition. • PENDING CODE is not available. • FREEZE FRAME DATA is available. • HOLD lamp does not flash. • DTC is stored in TCM memory.
POSSIBLE CAUSE	• Shift solenoid C malfunction • Shift valve C stuck • TCM malfunction

Diagnostic procedure

STEP	INSPECTION		ACTION
1	**VERIFY FREEZE FRAME DATA HAS BEEN RECORDED** • Has FREEZE FRAME PID DATA been recorded?	Yes	Go to next step.
		No	Record FREEZE FRAME PID DATA on repair order, then go to next step.
2	**VERIFY RELATED REPAIR INFORMATION AVAILABILITY** • Check for related Service Bulletins and/or on-line repair information availability. • Is any related repair information available?	Yes	Perform repair or diagnosis according to available repair information. • If vehicle is not repaired, go to next step.
		No	Go to next step.
3	**CHECK FOR DTC** • Turn ignition key to ON (engine OFF). • Inspect DTC. • Is DTC outputted?	Yes	Follow applicable DTC inspection procedure.
		No	Go to next step.
4	**CHECK ATF CONDITION** • Turn ignition key to OFF. • Check ATF condition. — Transparent red: Normal — Milky: Water mixed in fluid — Reddish brown: Deteriorated ATF • Is it okay? (See K2–74 Automatic Transaxle Fluid (ATF) Condition Inspection.)	Yes	replace control valve body, then go to next step.
		No	If ATF color milky or reddish brown, reaper or replace ATX, then go to next step.
5	**VERIFY TROUBLESHOOTING OF DTC P0762 COMPLETED.** • Make sure to reconnect all disconnected connectors. • Clear DTC from memory using WDS or equivalent. • Start engine. • Warm up ATX. • Drive vehicle in D range and make sure that gears shift smoothly from 1GR to 5GR. • Is same DTC present?	Yes	Replace TCM, then go to next step. (See K2–94 TCM REMOVAL/INSTALLATION.)
		No	Go to next step.
6	**VERIFY AFTER REPAIR PROCEDURE** • Perform “After Repair Procedure”. (See K2–116 AFTER REPAIR PROCEDURE.) • Is there any DTC present?	Yes	Go to applicable DTC inspection.
		No	Troubleshooting completed.

End Of Ste

DTC P0763

AME577018901W23

DTC P0763	Shift solenoid C circuit malfunction (open/short)
DETECTION CONDITION	• Open or short in shift solenoid C signal system (while TCM monitors solenoid output voltage, the voltage that differs from the ON/OFF signal output by CPU in TCM is detected). **Diagnostic support note:** • This is continuous monitor (CCM). • MIL illuminates if TCM detects the above malfunction condition during first drive cycle. • PENDING CODE is not available. • FREEZE FRAME DATA is available. • HOLD lamp flashes. • DTC is stored in TCM memory.
POSSIBLE CAUSE	• Open circuit between shift solenoid C terminal A and TCM terminal 2X • Short to ground between shift solenoid C terminal A and TCM terminal 2X • Short to power between shift solenoid C terminal A and TCM terminal 2X • Shift solenoid C malfunction • Damaged connector between shift solenoid C and TCM • TCM malfunction

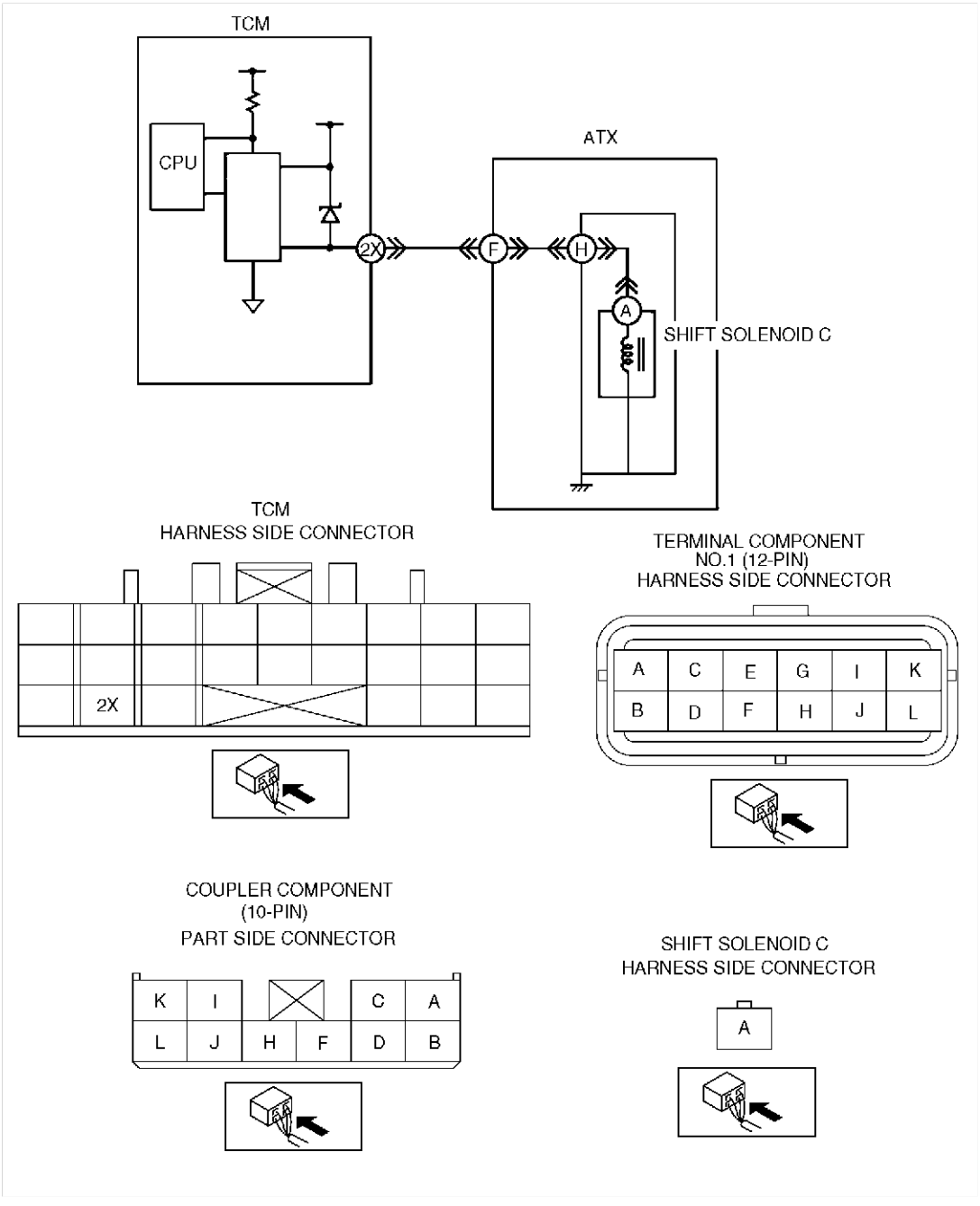

Diagnostic procedure

STEP	INSPECTION		ACTION
1	**VERIFY FREEZE FRAME DATA HAS BEEN RECORDED** • Has FREEZE FRAME PID DATA been recorded?	Yes	Go to next step.
		No	Record FREEZE FRAME PID DATA on repair order, then go to next step.
2	**VERIFY RELATED REPAIR INFORMATION AVAILABILITY** • Check for related Service Bulletins and/or on-line repair information availability. • Is any related repair information available?	Yes	Perform repair or diagnosis according to available repair information. • If vehicle is not repaired, go to next step.
		No	Go to next step.
3	**INSPECT TERMINAL COMPONENT NO.1 (12-PIN) FOR POOR CONNECTION** • Turn ignition key to OFF. • Disconnect terminal componentNo.1 (12-pin). • Check for poor connection (damaged, pulled-out, terminals, corrosion, etc.). • Are terminals okay?	Yes	Go to next step.
		No	Repair or replace terminals, then go to Step 13.
4	**INSPECT RESISTANCE** • Check resistance between terminal component No.1 (12-pin) terminal F (transaxle case side) and body ground. • Is resistance **within 14—18 ohms**? (See K2–84 SOLENOID VALVE INSPECTION.)	Yes	Go to Step 9.
		No	Go to next step.
5	**INSPECT COUPLER COMPONENT (10-PIN) FOR POOR CONNECTION** • Disconnect coupler component (10-pin) connector. • Check for poor connection (damaged, pulled-out, terminals, corrosion, etc.). • Is terminal okay?	Yes	Go to next step.
		No	Repair or replace terminal, then go to Step 13.
6	**INSPECT RESISTANCE** • Check resistance between coupler component (10-pin) terminal H (part side) and body ground. • Is resistance **within 14—18 ohms**? (See K2–84 SOLENOID VALVE INSPECTION.)	Yes	Repair or replace terminal component No.1 (12-pin), then go to Step 13.
		No	Go to next step.
7	**INSPECT SHIFT SOLENOID C CONNECTOR FOR POOR CONNECTION** • Disconnect shift solenoid C connector. • Check for poor connection (damaged, pulled-out, terminals, corrosion, etc.). • Is terminal okay?	Yes	Go to next step.
		No	Repair or replace terminal, then go to Step 13.
8	**INSPECT RESISTANCE** • Check resistance between shift solenoid C connector terminal A (part side) and body ground. • Is resistance **within 14—18 ohms**? (See K2–84 SOLENOID VALVE INSPECTION.)	Yes	Repair or replace coupler component (10-pin), then go to Step 13.
		No	Verify shift solenoid C installation. • If shift solenoid C is installed correctly, replace pressure control solenoid, then go to Step 13 (See K2–86 SOLENOID VALVE REMOVAL/INSTALLATION.)
9	**INSPECT TCM CONNECTOR FOR POOR CONNECTION** • Disconnect TCM connector. • Check for poor connection (damaged, pulled-out, terminals, corrosion, etc.). • Are terminals okay?	Yes	Go to next step.
		No	Repair terminals, then go to Step 13.
10	**INSPECT TERMINAL COMPONENT NO.1 (12-PIN) CIRCUIT FOR OPEN CIRCUIT** • Check continuity between TCM terminal 2X (harness-side) and terminal component No.1 (12-pin) terminal F (harness-side). • Is there continuity between terminals?	Yes	Go to next step.
		No	Repair or replace harness, then go to Step 13.

STEP	INSPECTION		ACTION
11	**INSPECT TERMINAL COMPONENT NO.1 (12-PIN) CIRCUIT FOR SHORT TO POWER** • Turn ignition key to ON (engine OFF). • Check voltage at terminal component No.1 (12-pin) terminal F (harness-side). • Is voltage **0 V**?	Yes	Go to next step.
		No	Repair or replace harness, then go to Step 13.
12	**INSPECT TCM CIRCUIT FOR SHORT TO GROUND** • Turn ignition key to OFF. • Check continuity between TCM terminal 2X (harness-side) and body ground. • Is there any continuity?	Yes	Repair or replace harness, then go to next step.
		No	Go to next step.
13	**VERIFY TROUBLESHOOTING OF DTC P0763 COMPLETED** • Make sure to reconnect all disconnected connectors. • Clear DTC from memory using WDS or equivalent. • Drive vehicle in D range and make sure that gears shift smoothly from 1GR to 5GR. • Is same DTC present?	Yes	Replace TCM, then go to next step. (See K2–94 TCM REMOVAL/INSTALLATION.)
		No	Go to next step.
14	**VERIFY AFTER REPAIR PROCEDURE** • Perform “After Repair Procedure”. (See K2–116 AFTER REPAIR PROCEDURE.) • Is there any DTC present?	Yes	Go to applicable DTC inspection.
		No	Troubleshooting completed.

End Of Sie

DTC P0768

AME577018901W24

DTC P0768	Reduction timing solenoid valve circuit malfunction (open/short)
DETECTION CONDITION	• Open or short in reduction timing solenoid signal system (while TCM monitors solenoid output voltage, the voltage that differs from the ON/OFF signal output by CPU in TCM is detected.) **Diagnostic support note:** • This is continuous monitor (CCM). • MIL does not illuminate • PENDING CODE is not available. • FREEZE FRAME DATA is not available. • HOLD lamp flashes. • DTC is stored in TCM memory.
POSSIBLE CAUSE	• Open circuit between reduction timing solenoid valve terminal A and TCM terminal 2G • Short to ground between reduction timing solenoid valve terminal A and TCM terminal 2G • Short to power between reduction timing solenoid valve terminal A and TCM terminal 2G • Reduction timing solenoid valve malfunction • Damaged connector between reduction timing solenoid and TCM • TCM malfunction

DTC P0768	Reduction timing solenoid valve circuit malfunction (open/short)

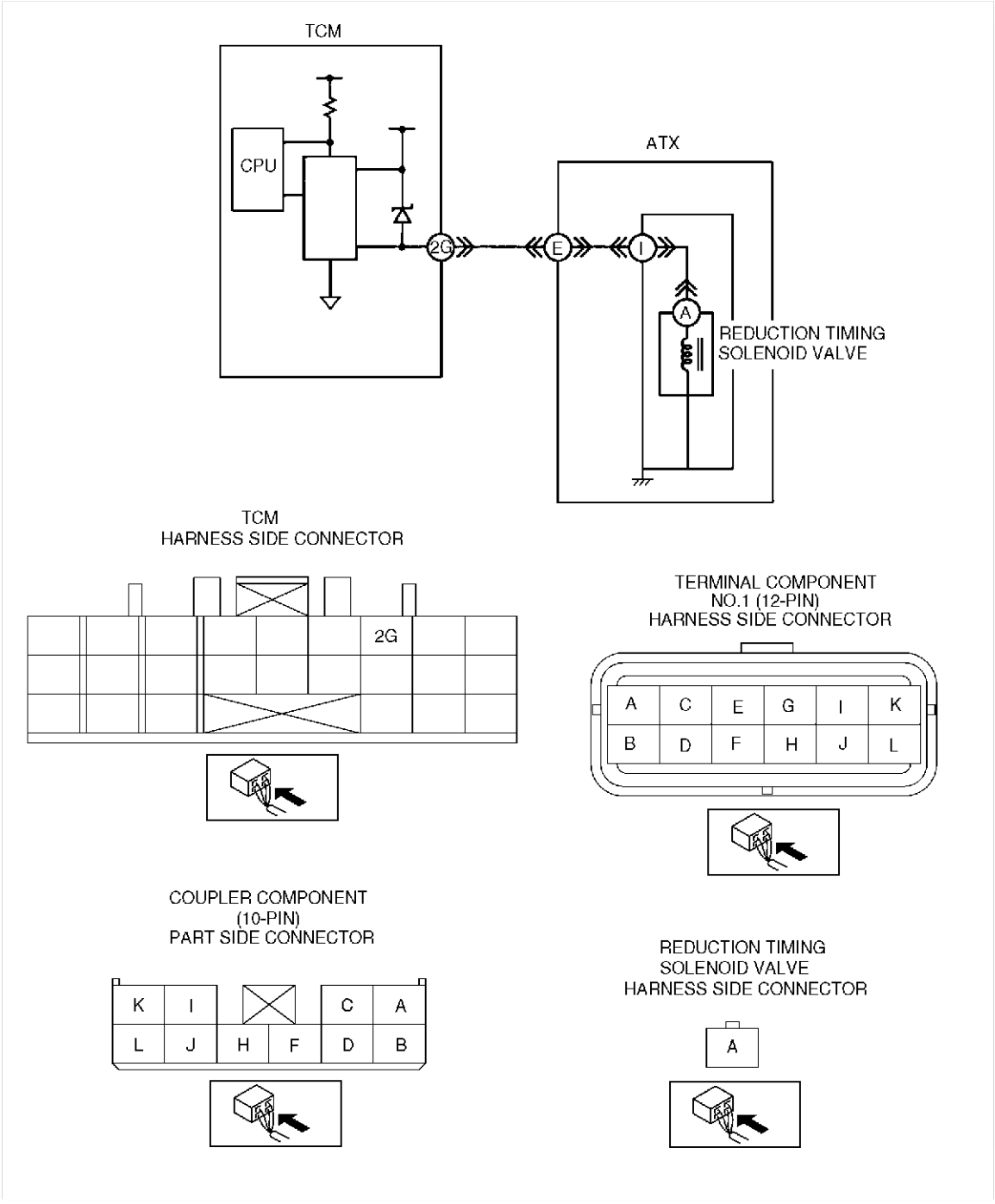

Diagnostic procedure

STEP	INSPECTION		ACTION
1	**VERIFY RELATED REPAIR INFORMATION AVAILABILITY** • Check for related Service Bulletins and/or on-line repair information availability. • Is any related repair information available?	Yes	Perform repair or diagnosis according to available repair information. • If vehicle is not repaired, go to next step.
		No	Go to next step.
2	**INSPECT TERMINAL COMPONENT NO.1 (12-PIN) FOR POOR CONNECTION** • Turn ignition key to OFF. • Disconnect terminal componentNo.1 (12-pin). • Check for poor connection (damaged, pulled-out, terminals, corrosion, etc.). • Are terminals okay?	Yes	Go to next step.
		No	Repair or replace terminals, then go to Step 12.

K2

STEP	INSPECTION		ACTION
3	**INSPECT RESISTANCE** • Check resistance between terminal component No.1 (12-pin) terminal E (transaxle case side) and body ground. • Is resistance **within 14—18 ohms**? (See K2–84 SOLENOID VALVE INSPECTION.)	Yes	Go to Step 8.
		No	Go to next step.
4	**INSPECT COUPLER COMPONENT (10-PIN) FOR POOR CONNECTION** • Disconnect coupler component (10-pin) connector. • Check for poor connection (damaged, pulled-out, terminals, corrosion, etc.). • Is terminal okay?	Yes	Go to next step.
		No	Repair or replace terminal, then go to Step 12.
5	**INSPECT RESISTANCE** • Check resistance between coupler component (10-pin) terminal I (part side) and body ground. • Is resistance **within 14—18 ohms**? (See K2–84 SOLENOID VALVE INSPECTION.)	Yes	Repair or replace terminal component No.1 (12-pin), then go to Step 12.
		No	Go to next step.
6	**INSPECT REDUCTION TIMING SOLENOID VALVE CONNECTOR FOR POOR CONNECTION** • Disconnect reduction timing solenoid valve connector. • Check for poor connection (damaged, pulled-out, terminals, corrosion, etc.). • Is terminal okay?	Yes	Go to next step.
		No	Repair or replace terminal, then go to Step 12.
7	**INSPECT RESISTANCE** • Check resistance between reduction timing solenoid valve connector terminal A (part side) and body ground. • Is resistance **within 14—18 ohms**? (See K2–84 SOLENOID VALVE INSPECTION.)	Yes	Repair or replace coupler component (10-pin), then go to Step 12.
		No	Verify reduction timing solenoid valve installation. • If reduction timing solenoid valve is installed correctly, replace reduction timing solenoid valve, then go to Step 12 (See K2–86 SOLENOID VALVE REMOVAL/INSTALLATION.)
8	**INSPECT TCM CONNECTOR FOR POOR CONNECTION** • Disconnect TCM connector. • Check for poor connection (damaged, pulled-out, terminals, corrosion, etc.). • Are terminals okay?	Yes	Go to next step.
		No	Repair terminals, then go to Step 12.
9	**INSPECT TERMINAL COMPONENT NO.1 (12-PIN) CIRCUIT FOR OPEN CIRCUIT** • Check continuity between TCM terminal 2G (harness-side) and terminal component No.1 (12-pin) terminal E (harness-side). • Is there continuity between terminals?	Yes	Go to next step.
		No	Repair or replace harness, then go to Step 12.
10	**INSPECT TERMINAL COMPONENT NO.1 (12-PIN) CIRCUIT FOR SHORT TO POWER** • Turn ignition key to ON (engine OFF). • Check voltage at terminal component No.1 (12-pin) terminal E (harness-side). • Is voltage **0 V**?	Yes	Go to next step.
		No	Repair or replace harness, then go to Step 12.
11	**INSPECT TCM CIRCUIT FOR SHORT TO GROUND** • Turn ignition key to OFF. • Check continuity between TCM terminal 2G (harness-side) and body ground. • Is there any continuity?	Yes	Repair or replace harness, then go to next step.
		No	Go to next step.

STEP	INSPECTION		ACTION
12	**VERIFY TROUBLESHOOTING OF DTC P0763 COMPLETED** • Make sure to reconnect all disconnected connectors. • Clear DTC from memory using WDS or equivalent. • Drive vehicle in D range and make sure that gears shift smoothly from 1GR to 5GR. • Is same DTC present?	Yes	Replace TCM, then go to next step. (See K2–94 TCM REMOVAL/INSTALLATION.)
		No	Go to next step.
13	**VERIFY AFTER REPAIR PROCEDURE** • Perform “After Repair Procedure”. (See K2–116 AFTER REPAIR PROCEDURE.) • Is there any DTC present?	Yes	Go to applicable DTC inspection.
		No	Troubleshooting completed.

End Of Sie

DTC P0773

AME577018901W25

DTC P0773	Neutral shift solenoid valve circuit malfunction (open/short)
DETECTION CONDITION	• Open or short in neutral shift solenoid signal system (while TCM monitors solenoid output voltage, the voltage that differs from the ON/OFF signal output by CPU in TCM is detected). **Diagnostic support note:** • This is continuous monitor (CCM). • MIL does not illuminate. • PENDING CODE is not available. • FREEZE FRAME DATA is not available. • HOLD lamp flashes. • DTC is stored in TCM memory.
POSSIBLE CAUSE	• Open circuit between neutral shift solenoid valve terminal A and TCM terminal 2D • Short to ground between neutral shift solenoid valve terminal A and TCM terminal 2D • Short to power between neutral shift solenoid vale terminal A and TCM terminal 2D • Neutral shift solenoid valve malfunction • Damaged connector between neutral shift solenoid valve and TCM • TCM malfunction

DTC P0773	Neutral shift solenoid valve circuit malfunction (open/short)

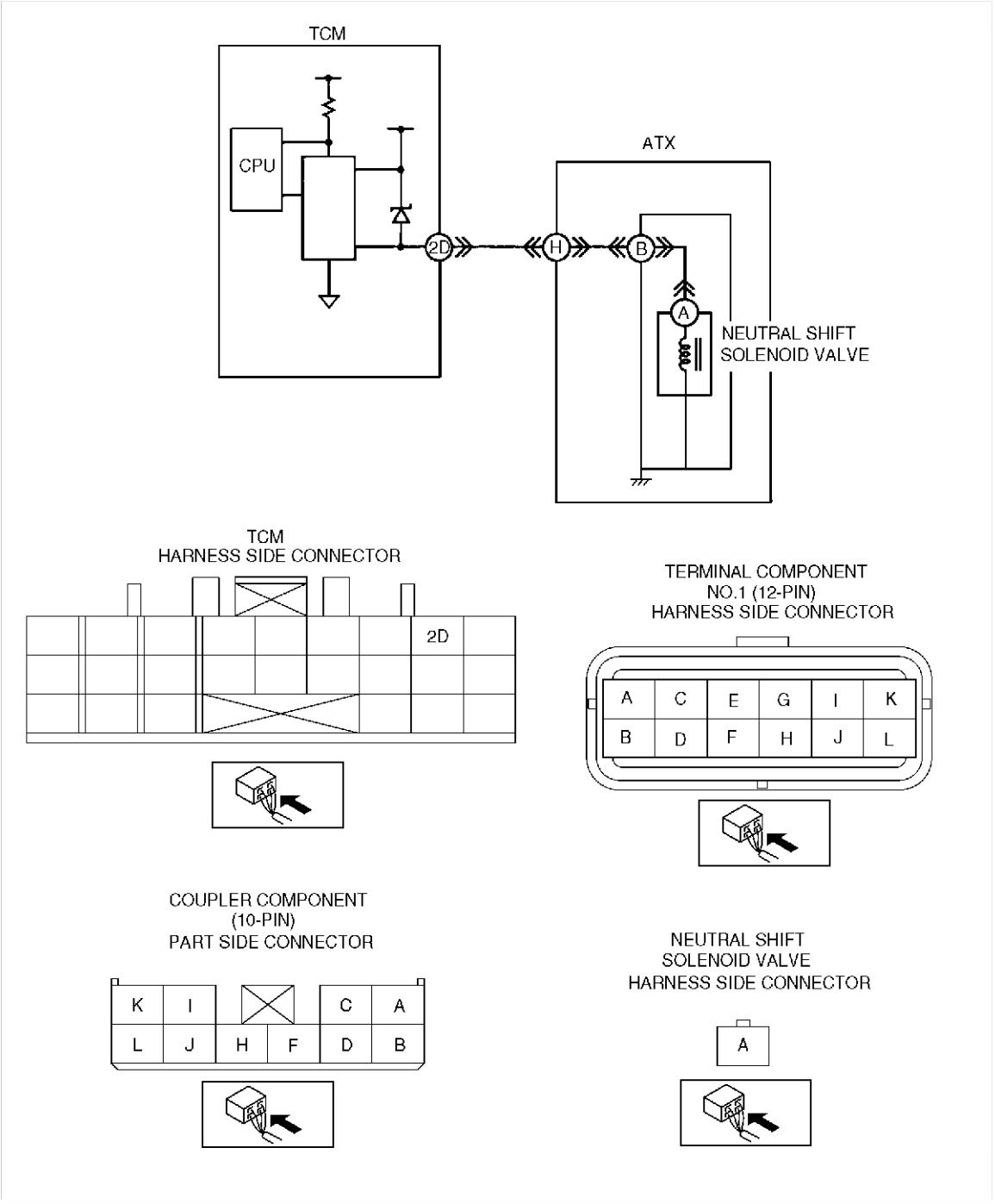

Diagnostic procedure

STEP	INSPECTION		ACTION
1	**VERIFY RELATED REPAIR INFORMATION AVAILABILITY** • Check for related Service Bulletins and/or on-line repair information availability. • Is any related repair information available?	Yes	Perform repair or diagnosis according to available repair information. • If vehicle is not repaired, go to next step.
		No	Go to next step.
2	**INSPECT TERMINAL COMPONENT NO.1 (12-PIN) FOR POOR CONNECTION** • Turn ignition key to OFF. • Disconnect terminal component No.1 (12-pin). • Check for poor connection (damaged, pulled-out, terminals, corrosion, etc.). • Are terminals okay?	Yes	Go to next step.
		No	Repair or replace terminals, then go to Step 12.

STEP	INSPECTION		ACTION
3	**INSPECT RESISTANCE** • Check resistance between terminal component No.1 (12-pin) terminal H (transaxle case side) and body ground. • Is resistance **within 14—18 ohms**? (See K2–84 SOLENOID VALVE INSPECTION.)	Yes	Go to Step 8.
		No	Go to next step.
4	**INSPECT COUPLER COMPONENT (10-PIN) FOR POOR CONNECTION** • Disconnect coupler component (10-pin) connector. • Check for poor connection (damaged, pulled-out, terminals, corrosion, etc.). • Is terminal okay?	Yes	Go to next step.
		No	Repair or replace terminal, then go to Step 12.
5	**INSPECT RESISTANCE** • Check resistance between coupler component (10-pin) terminal B (part side) and body ground. • Is resistance **within 14—18 ohms**? (See K2–84 SOLENOID VALVE INSPECTION.)	Yes	Repair or replace terminal component No.1 (12-pin), then go to Step 12.
		No	Go to next step.
6	**INSPECT NEUTRAL SHIFT SOLENOID VALVE CONNECTOR FOR POOR CONNECTION** • Disconnect neutral shift solenoid valve connector. • Check for poor connection (damaged, pulled-out, terminals, corrosion, etc.). • Is terminal okay?	Yes	Go to next step.
		No	Repair or replace terminal, then go to Step 12.
7	**INSPECT RESISTANCE** • Check resistance between neutral shift solenoid valve connector terminal A (part side) and body ground. • Is resistance **within 14—18 ohms**? (See K2–84 SOLENOID VALVE INSPECTION.)	Yes	Repair or replace coupler component (10-pin), then go to Step 12.
		No	Verify neutral shift solenoid valve installation. • If neutral shift solenoid valve is installed correctly, replace neutral shift solenoid valve, then go to Step 12 (See K2–86 SOLENOID VALVE REMOVAL/INSTALLATION.)
8	**INSPECT TCM CONNECTOR FOR POOR CONNECTION** • Disconnect TCM connector. • Check for poor connection (damaged, pulled-out, terminals, corrosion, etc.). • Are terminals okay?	Yes	Go to next step.
		No	Repair terminals, then go to Step 12.
9	**INSPECT TERMINAL COMPONENT NO.1 (12-PIN) CIRCUIT FOR OPEN CIRCUIT** • Check continuity between TCM terminal 2D (harness-side) and terminal component No.1 (12-pin) terminal H (harness-side). • Is there continuity between terminals?	Yes	Go to next step.
		No	Repair or replace harness, then go to Step 12.
10	**INSPECT TERMINAL COMPONENT NO.1 (12-PIN) CIRCUIT FOR SHORT TO POWER** • Turn ignition key to ON (engine OFF). • Check voltage at terminal component No.1 (12-pin) terminal H (harness-side). • Is voltage **0 V**?	Yes	Go to next step.
		No	Repair or replace harness, then go to Step 12.
11	**INSPECT TCM CIRCUIT FOR SHORT TO GROUND** • Turn ignition key to OFF. • Check continuity between TCM terminal 2D (harness-side) and body ground. • Is there any continuity?	Yes	Repair or replace harness, then go to next step.
		No	Go to next step.
12	**VERIFY TROUBLESHOOTING OF DTC P0773 COMPLETED** • Make sure to reconnect all disconnected connectors. • Clear DTC from memory using WDS or equivalent. • Drive vehicle in D range and make sure that gears shift smoothly from 1GR to 5GR. • Is same DTC present?	Yes	Replace TCM, then go to next step. (See K2–94 TCM REMOVAL/INSTALLATION.)
		No	Go to next step.

STEP	INSPECTION		ACTION
13	**VERIFY AFTER REPAIR PROCEDURE** • Perform “After Repair Procedure”. (See K2–116 AFTER REPAIR PROCEDURE.) • Is there any DTC present?	Yes	Go to applicable DTC inspection.
		No	Troubleshooting completed.

End Of Ste

DTC P0778

AME577018901W26

DTC P0778	2-4 brake solenoid valve circuit malfunction (open/short)
DETECTION CONDITION	• Open or short in 2-4 brake solenoid signal system (while TCM monitors solenoid output voltage, the voltage that differs from the ON/OFF signal output by CPU in TCM is detected). **Diagnostic support note:** • This is continuous monitor (CCM). • MIL does not illuminates. • PENDING CODE is not available. • FREEZE FRAME DATA is not available. • HOLD lamp flashes. • DTC is stored in TCM memory.
POSSIBLE CAUSE	• Open circuit between 2-4 brake solenoid valve terminal A and TCM terminal 2V • Short to ground between 2-4 brake solenoid valve terminal A and TCM terminal 2V • Short to power between 2-4 brake solenoid valve terminal A and TCM terminal 2V • 2-4 brake solenoid valve malfunction • Damaged connector between 2-4 brake solenoid valve and TCM • TCM malfunction

DTC P0778	2-4 brake solenoid valve circuit malfunction (open/short)

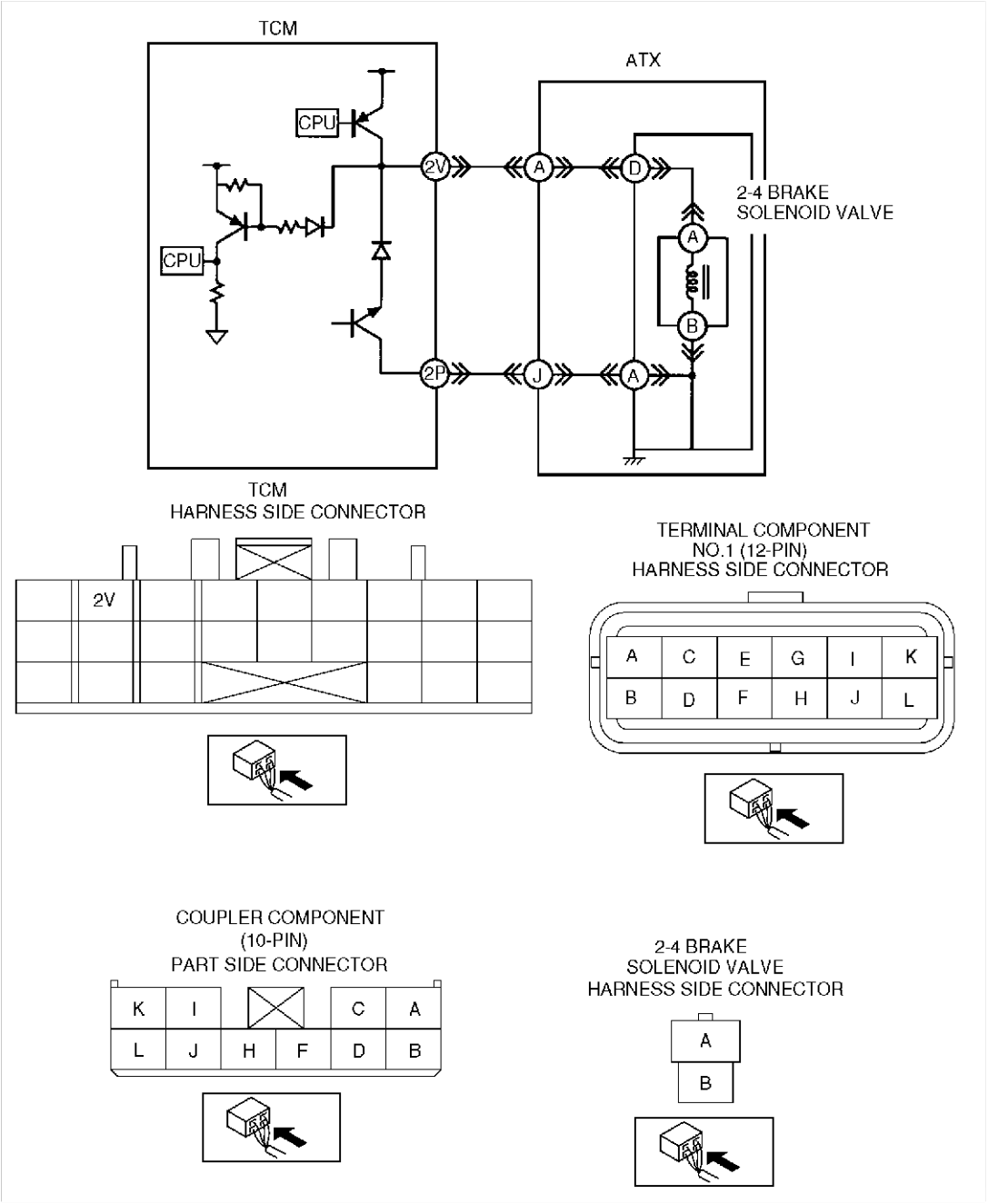

Diagnostic procedure

STEP	INSPECTION		ACTION
1	**VERIFY RELATED REPAIR INFORMATION AVAILABILITY** • Check for related Service Bulletins and/or on-line repair information availability. • Is any related repair information available?	Yes	Perform repair or diagnosis according to available repair information. • If vehicle is not repaired, go to next step.
		No	Go to next step.
2	**INSPECT TERMINAL COMPONENT NO.1 (12-PIN) FOR POOR CONNECTION** • Turn ignition key to OFF. • Disconnect terminal component No.1 (12-pin). • Check for poor connection (damaged, pulled-out, terminals, corrosion, etc.). • Are terminals okay?	Yes	Go to next step.
		No	Repair or replace terminals, then go to Step 12.

STEP	INSPECTION		ACTION
3	**INSPECT RESISTANCE** • Check resistance between terminal component No.1 (12-pin) terminal A (transaxle case side) and body ground. • Is resistance **within 2.6—3.2 ohms**? (See K2–84 SOLENOID VALVE INSPECTION.)	Yes	Go to Step 8.
		No	Go to next step.
4	**INSPECT COUPLER COMPONENT (10-PIN) FOR POOR CONNECTION** • Disconnect coupler component (10-pin) connector. • Check for poor connection (damaged, pulled-out, terminals, corrosion, etc.). • Is terminal okay?	Yes	Go to next step.
		No	Repair or replace terminal, then go to Step 12.
5	**INSPECT RESISTANCE** • Check resistance between coupler component (10-pin) terminal D (part side) and body ground. • Is resistance **within 2.6—3.2 ohms**? (See K2–84 SOLENOID VALVE INSPECTION.)	Yes	Repair or replace terminal component No.1 (12-pin), then go to Step 12.
		No	Go to next step.
6	**INSPECT 2-4 BRAKE SOLENOID VALVE CONNECTOR FOR POOR CONNECTION** • Disconnect 2-4 brake solenoid vale connector. • Check for poor connection (damaged, pulled-out, terminals, corrosion, etc.). • Is terminal okay?	Yes	Go to next step.
		No	Repair or replace terminal, then go to Step 12.
7	**INSPECT RESISTANCE** • Check resistance between 2-4 brake solenoid valve connector terminal A (part side) and body ground. • Is resistance **within 2.6—3.2 ohms**? (See K2–84 SOLENOID VALVE INSPECTION.)	Yes	Repair or replace coupler component (10-pin), then go to Step 12.
		No	Verify 2-4 brake solenoid valve installation. • If 2-4 brake solenoid valve is installed correctly, replace 2-4 brake solenoid valve, then go to Step 12 (See K2–86 SOLENOID VALVE REMOVAL/INSTALLATION.)
8	**INSPECT TCM CONNECTOR FOR POOR CONNECTION** • Disconnect TCM connector. • Check for poor connection (damaged, pulled-out, terminals, corrosion, etc.). • Are terminals okay?	Yes	Go to next step.
		No	Repair terminals, then go to Step 12.
9	**INSPECT TERMINAL COMPONENT NO.1 (12-PIN) CIRCUIT FOR OPEN CIRCUIT** • Check continuity between TCM terminal 2V (harness-side) and terminal component No.1 (12-pin) terminal A (harness-side). • Is there continuity between terminals?	Yes	Go to next step.
		No	Repair or replace harness, then go to Step 12.
10	**INSPECT TERMINAL COMPONENT NO.1 (12-PIN) CIRCUIT FOR SHORT TO POWER** • Turn ignition key to ON (engine OFF). • Check voltage at terminal component No.1 (12-pin) terminal A (harness-side). • Is voltage **0 V**?	Yes	Go to next step.
		No	Repair or replace harness, then go to Step 12.
11	**INSPECT TCM CIRCUIT FOR SHORT TO GROUND** • Turn ignition key to OFF. • Check continuity between TCM terminal 2V (harness-side) and body ground. • Is there any continuity?	Yes	Repair or replace harness, then go to next step.
		No	Go to next step.
12	**VERIFY TROUBLESHOOTING OF DTC P0778 COMPLETED** • Make sure to reconnect all disconnected connectors. • Clear DTC from memory using WDS or equivalent. • Drive vehicle in D range and make sure that gears shift smoothly from 1GR to 5GR. • Is same DTC present?	Yes	Replace TCM, then go to next step. (See K2–94 TCM REMOVAL/INSTALLATION.)
		No	Go to next step.

STEP	INSPECTION		ACTION
13	**VERIFY AFTER REPAIR PROCEDURE** • Perform “After Repair Procedure”. (See K2–116 AFTER REPAIR PROCEDURE.) • Is there any DTC present?	Yes	Go to applicable DTC inspection.
		No	Troubleshooting completed.

End Of Ste

DTC P0791

AME577018901W27

DTC P0791	Intermediate sensor circuit malfunction (open/short)
DETECTION CONDITION	• Rotation speed of output gear (intermediate sensor) is low when vehicle speed and engine speed exceed the preprogrammed value. **Diagnostic support note:** • This is continuous monitor (CCM). • MIL illuminates if TCM detects the above malfunction condition. • PENDING CODE is not available. • FREEZE FRAME DATA is available. • HOLD lamp flashes. • DTC is stored in TCM memory.
POSSIBLE CAUSE	• Intermediate sensor malfunction. • Short to ground between intermediate sensor terminal B and TCM terminal 1K • Short to ground between intermediate sensor terminal A and TCM terminal 1X • Open circuit between intermediate sensor terminal B and TCM terminal 1K • Open circuit between intermediate sensor terminal A and TCM terminal 1X • Damaged connectors between intermediate sensor and TCM. • TCM malfunction.

DTC P0791	Intermediate sensor circuit malfunction (open/short)

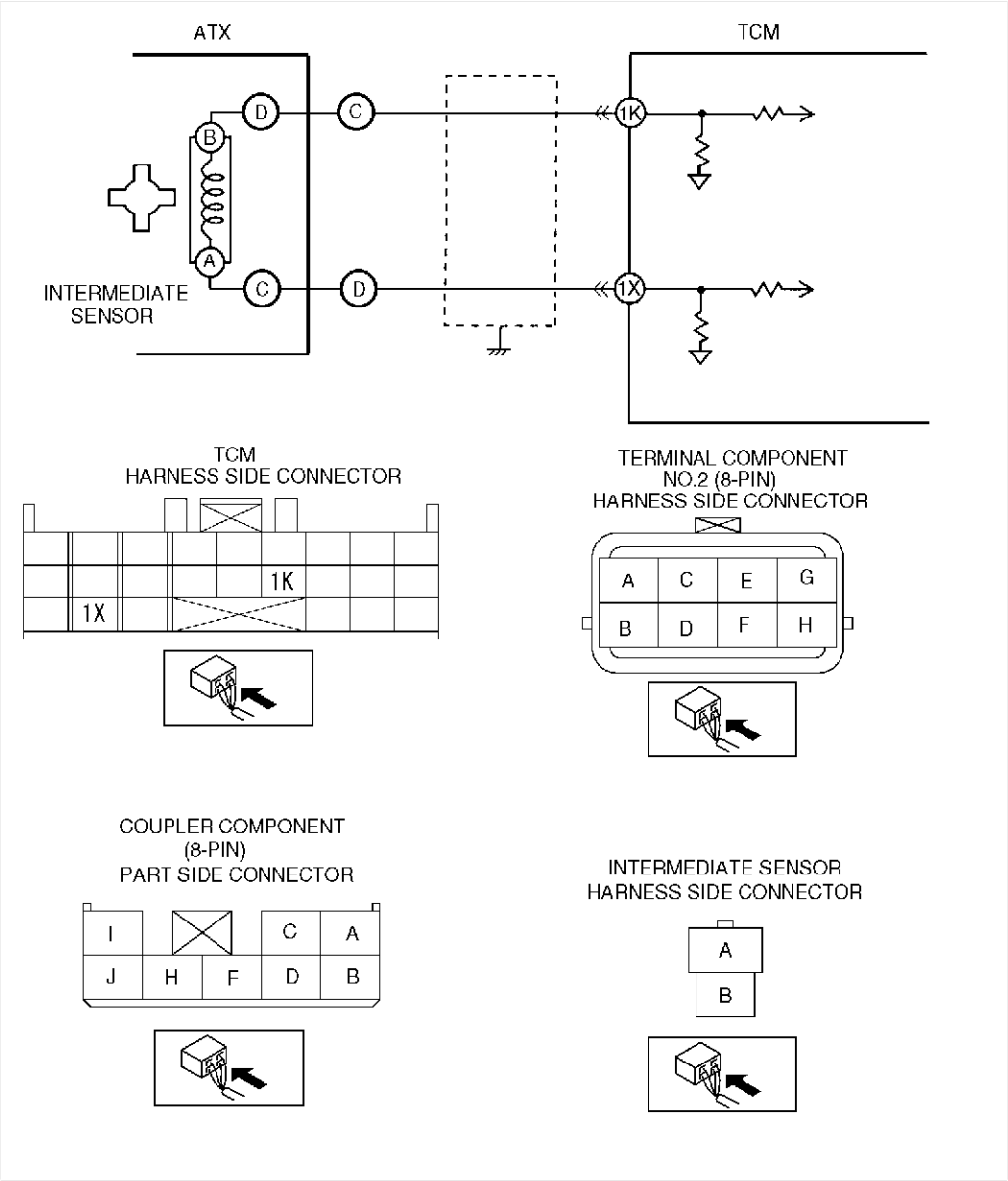

Diagnostic procedure

STEP	INSPECTION		ACTION
1	**VERIFY FREEZE FRAME DATA HAS BEEN RECORDED** • Has FREEZE FRAME PID DATA been recorded?	Yes	Go to next step.
		No	Record FREEZE FRAME PID DATA on repair order, then go to next step.
2	**VERIFY RELATED REPAIR INFORMATION AVAILABILITY** • Check for related Service Bulletins and/or on-line repair information availability. • Is any related repair information available?	Yes	Perform repair or diagnosis according to available repair information. • If vehicle is not repaired, go to next step.
		No	Go to next step.
3	**INSPECT TERMINAL COMPONENT NO.2 (8-PIN) CONNECTOR FOR POOR CONNECTION** • Turn ignition key to OFF. • Disconnect terminal component No.2 (8-pin) connector. • Check for poor connection (damaged, pulled-out terminals, corrosion, etc.). • Are terminals okay?	Yes	Go to next step.
		No	Repair or replace terminals, then go to Step 12.

STEP	INSPECTION		ACTION
4	**INSPECT INTERMEDIATE SENSOR RESISTANCE** • Measure resistance between terminal component No.2 (8-pin) (transaxle case side). • Is resistance **within 513—627 ohms** between terminal component No.2 (8-pin) terminal C and D (transaxle case side)?	Yes	Go to next step.
		No	Go to Step 8
5	**INSPECT TCM CONNECTOR FOR POOR CONNECTION** • Disconnect TCM connector. • Check for poor connection (damaged, pulled-out terminals, corrosion, etc.). • Are terminals okay?	Yes	Go to next step.
		No	Repair terminals, then go to Step 12.
6	**INSPECT TERMINAL COMPONENT NO.2 (8-PIN) CIRCUIT FOR OPEN** • Check terminal component No.2 (8-pin) terminals (harness-side) and TCM terminals (harness-side). — C and 1K — D and 1X • Is there continuity?	Yes	Go to next step.
		No	Repair or replace harness, then go to Step 12.
7	**INSPECT TERMINAL COMPONENT NO.2 (8-PIN) CIRCUIT FOR SHORT TO GROUND** • Check terminal component No.2 (8-pin) terminal (harness-side) and body ground. — C and body ground — D and body ground • Is there any continuity?	Yes	Repair or replace harness, then go to Step 12.
		No	Go to Step 12.
8	**INSPECT COUPLER COMPONENT (8-PIN) CONNECTOR FOR POOR CONNECTION** • Disassemble the control valve body cover. • Disconnect coupler component (8-pin) connector. • Check for poor connection (damaged, pulled-out terminals, corrosion, etc.). • Are terminals okay?	Yes	Go to next step.
		No	Repair terminals, then go to Step 12.
9	**INSPECT INTERMEDIATE SENSOR RESISTANCE** • Measure resistance between coupler component (8-pin). • Is resistance **within 513—627 ohms** between coupler component (8-pin) terminal D and C (part side)?	Yes	Repair or replace coupler component, then go to Step 12.
		No	Go to next step.
10	**INSPECT INTERMEDIATE SENSOR CONNECTOR FOR POOR CONNECTION** • Disassemble the transaxle. • Disconnect intermediate sensor connector. • Check for poor connection (damaged, pulled-out terminals, corrosion, etc.). • Are terminals okay?	Yes	Go to next step.
		No	Repair terminals, then go to Step 12.
11	**INSPECT INTERMEDIATE SENSOR RESISTANCE** • Measure resistance between intermediate sensor. • Is resistance **within 513—627 ohms** between intermediate sensor connector terminal A and B (part side)?	Yes	Repair or replace coupler component, then go to next step.
		No	Replace intermediate sensor, then go to next step.

STEP	INSPECTION		ACTION
12	**VERIFY TROUBLESHOOTING OF DTC P0715 COMPLETED** • Make sure to reconnect all disconnected connectors. • Clear DTC from memory using WDS or equivalent. • Drive vehicle with vehicle speed **40 km/h {25 mph} or above** and engine speed 1500 rpm or above for **2 second or more** • Repeat Step ii two times. • Is same DTC present?	Yes	Replace TCM, then go to next step. (See K2–94 TCM REMOVAL/INSTALLATION.)
		No	Go to next step.
13	**VERIFY AFTER REPAIR PROCEDURE** • Perform “After Repair Procedure”. (See K2–116 AFTER REPAIR PROCEDURE.) • Is there any DTC present?	Yes	Go to applicable DTC inspection.
		No	Troubleshooting completed.

End Of Sie

DTC P0798

AME577018901W28

DTC P0798	High clutch solenoid valve circuit malfunction (open/short)
DETECTION CONDITION	• Open or short is high clutch solenoid signal system (while TCM monitors solenoid output voltage, the voltage that differs from the ON/OFF signal output by CPU in TCM is detected). **Diagnostic support note:** • This is continuous monitor (CCM). • MIL does not illuminate. • PENDING CODE is not available. • FREEZE FRAME DATA is not available. • HOLD lamp flashes. • DTC is stored in TCM memory.
POSSIBLE CAUSE	• Open circuit between high clutch solenoid valve terminal A and TCM terminal 2U • Short to ground between high clutch solenoid valve terminal A and TCM terminal 2U • Short to power between high clutch solenoid valve terminal A and TCM terminal 2U • high clutch solenoid valve malfunction • Damaged connector between high clutch solenoid valve and TCM • TCM malfunction

DTC P0798	High clutch solenoid valve circuit malfunction (open/short)

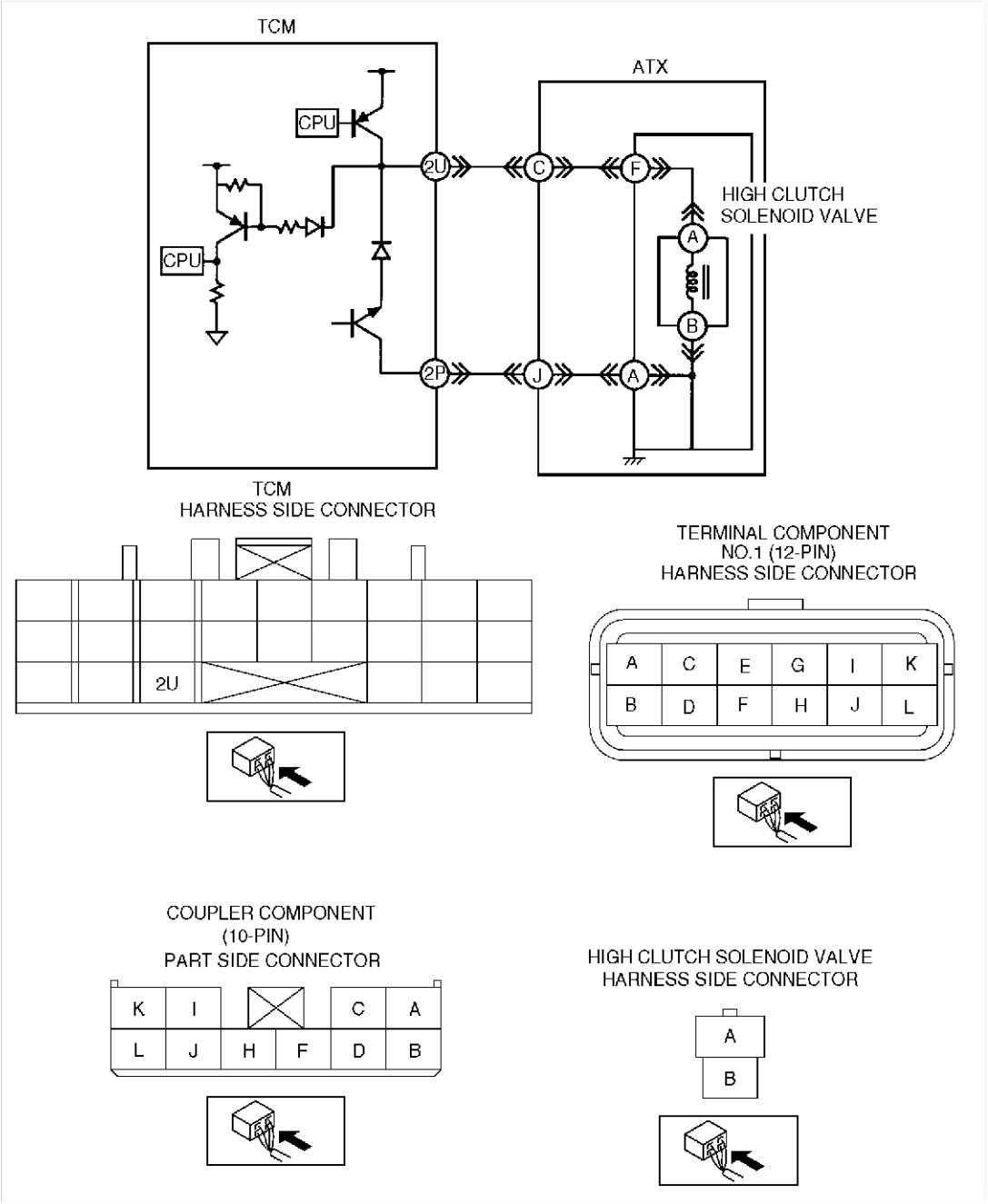

Diagnostic procedure

STEP	INSPECTION		ACTION
1	**VERIFY RELATED REPAIR INFORMATION AVAILABILITY** • Check for related Service Bulletins and/or on-line repair information availability. • Is any related repair information available?	Yes	Perform repair or diagnosis according to available repair information. • If vehicle is not repaired, go to next step.
		No	Go to next step.
2	**INSPECT TERMINAL COMPONENT NO.1 (12-PIN) FOR POOR CONNECTION** • Turn ignition key to OFF. • Disconnect terminal componentNo.1 (12-pin). • Check for poor connection (damaged, pulled-out, terminals, corrosion, etc.). • Are terminals okay?	Yes	Go to next step.
		No	Repair or replace terminals, then go to Step 12.

STEP	INSPECTION		ACTION
3	**INSPECT RESISTANCE** • Check resistance between terminal component No.1 (12-pin) terminal C (transaxle case side) and body ground. • Is resistance **within 2.6—3.2 ohms**? (See K2–84 SOLENOID VALVE INSPECTION.)	Yes	Go to Step 8.
		No	Go to next step.
4	**INSPECT COUPLER COMPONENT (10-PIN) FOR POOR CONNECTION** • Disconnect coupler component (10-pin) connector. • Check for poor connection (damaged, pulled-out, terminals, corrosion, etc.). • Is terminal okay?	Yes	Go to next step.
		No	Repair or replace terminal, then go to Step 12.
5	**INSPECT RESISTANCE** • Check resistance between coupler component (10-pin) terminal F (part side) and body ground. • Is resistance **within 2.6—3.2 ohms**? (See K2–84 SOLENOID VALVE INSPECTION.)	Yes	Repair or replace coupler component No.1 (12-pin), then go to Step 12.
		No	Go to next step.
6	**INSPECT HIGH CLUTCH SOLENOID VALVE CONNECTOR FOR POOR CONNECTION** • Disconnect high clutch solenoid valve connector. • Check for poor connection (damaged, pulled-out, terminals, corrosion, etc.). • Is terminal okay?	Yes	Go to next step.
		No	Repair or replace terminal, then go to Step 12.
7	**INSPECT RESISTANCE** • Check resistance between high clutch solenoid valve connector terminal A (part side) and body ground. • Is resistance **within 2.6—3.2 ohms**? (See K2–84 SOLENOID VALVE INSPECTION.)	Yes	Repair or replace coupler component (10-pin), then go to Step 12.
		No	Verify high clutch solenoid valve installation. • If high clutch solenoid valve is installed correctly, replace high clutch solenoid, then go to Step 13 (See K2–86 SOLENOID VALVE REMOVAL/INSTALLATION.)
8	**INSPECT TCM CONNECTOR FOR POOR CONNECTION** • Disconnect TCM connector. • Check for poor connection (damaged, pulled-out, terminals, corrosion, etc.). • Are terminals okay?	Yes	Go to next step.
		No	Repair terminals, then go to Step 12.
9	**INSPECT TERMINAL COMPONENT NO.1 (12-PIN) CIRCUIT FOR OPEN CIRCUIT** • Check continuity between TCM terminal 2U (harness-side) and terminal component No.1 (12-pin) terminal C (harness-side). • Is there continuity between terminals?	Yes	Go to next step.
		No	Repair or replace harness, then go to Step 12.
10	**INSPECT TERMINAL COMPONENT NO.1 (12-PIN) CIRCUIT FOR SHORT TO POWER** • Turn ignition key to ON (engine OFF). • Check voltage at terminal component No.1 (12-pin) terminal C (harness-side). • Is voltage **0 V**?	Yes	Go to next step.
		No	Repair or replace harness, then go to Step 12.
11	**INSPECT TCM CIRCUIT FOR SHORT TO GROUND** • Turn ignition key to OFF. • Check continuity between TCM terminal 2U (harness-side) and body ground. • Is there any continuity?	Yes	Repair or replace harness, then go to next step.
		No	Go to next step.
12	**VERIFY TROUBLESHOOTING OF DTC P0798 COMPLETED** • Make sure to reconnect all disconnected connectors. • Clear DTC from memory using WDS or equivalent. • Drive vehicle in D range and make sure that gears shift smoothly from 1GR to 5GR. • Is same DTC present?	Yes	Replace TCM, then go to next step. (See K2–94 TCM REMOVAL/INSTALLATION.)
		No	Go to next step.

STEP	INSPECTION		ACTION
13	**VERIFY AFTER REPAIR PROCEDURE** • Perform “After Repair Procedure”. (See K2–116 AFTER REPAIR PROCEDURE.) • Is there any DTC present?	Yes	Go to applicable DTC inspection.
		No	Troubleshooting completed.

End Of Ste

DTC P1710

AME577018901W29

DTC P1710	GND return circuit malfunction
DETECTION CONDITION	• TCM detects open circuit in GND return signal line from solenoid valve. **Diagnostic support note:** • This is a diagnostic support DTC (monitored one per key cycle). • MIL does not illuminate. • PENDING CODE is not available. • FREEZE FRAME DATA is not available. • HOLD lamp does not flash. • DTC is stored in TCM memory.
POSSIBLE CAUSE	• Open circuit between duty type solenoid valves terminal and TCM terminal 2P • Damaged connector between solenoid valve and TCM • TCM malfunction

DTC P1710	GND return circuit malfunction

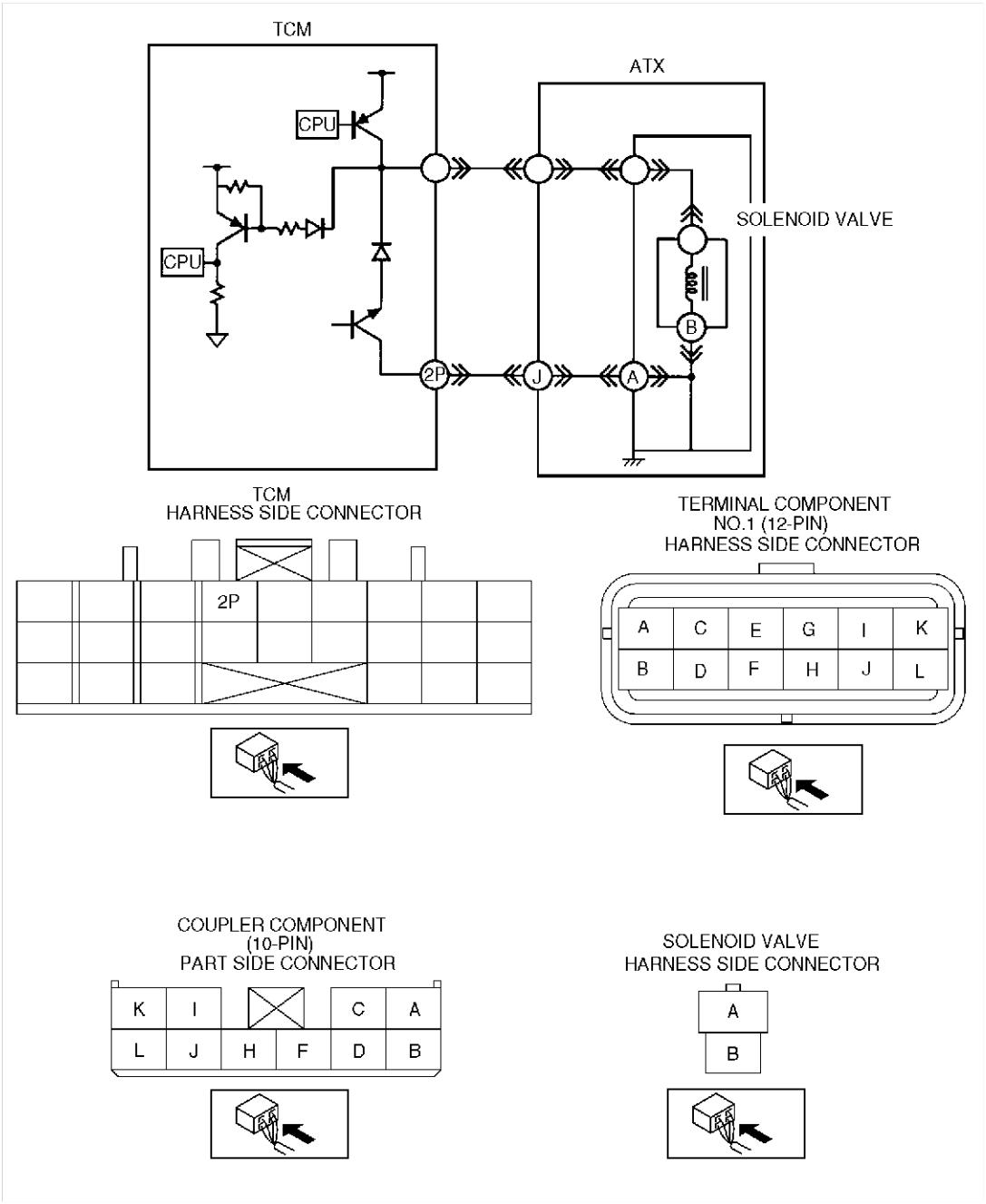

Diagnostic procedure

STEP	INSPECTION		ACTION
1	**VERIFY RELATED REPAIR INFORMATION AVAILABILITY** • Check for related Service Bulletins and/or on-line repair information availability. • Is any related repair information available?	Yes	Perform repair or diagnosis according to available repair information. • If vehicle is not repaired, go to next step.
		No	Go to next step.
2	**INSPECT TCM CONNECTOR FOR POOR CONNECTION** • Turn ignition key to OFF. • Disconnect TCM connector. • Check for poor connection (damaged, pulled-out, terminals, corrosion, etc.). • Are terminals okay?	Yes	Go to next step.
		No	Repair or replace terminals, then go to Step 9.

STEP	INSPECTION		ACTION
3	**INSPECT TCM CIRCUIT FOR SHORT TO GROUND** • Verify that TCM connector is disconnected. • Check continuity between TCM harness connector terminal 2P and ground. • Is there continuity?	Yes	Go to next step.
		No	Go to Step 5.
4	**INSPECT TCM INTERNAL CIRCUIT FOR OPEN** • Verify that TCM connector is disconnected. • Check continuity between TCM terminal 2P and TCM body. • Is there any continuity?	Yes	Go to Step 9.
		No	Replace TCM, then go to Step 9.
5	**INSPECT TERMINAL COMPONENT NO.1 (12-PIN) CONNECTOR FOR POOR CONNECTION** • Disconnect terminal component No.1 (12-pin) connector. • Check for poor connection (damaged, pulled-out, terminals, corrosion, etc.). • Are terminals okay?	Yes	Go to next step.
		No	Repair or replace terminals, then go to Step 9.
6	**INSPECT TERMINAL COMPONENT NO.1 (12-PIN) CIRCUIT FOR SHORT TO GROUND** • Verify that terminal component No.1 (12-pin) connector is disconnected. • Check continuity between terminal component No.1 (12-pin) connector terminal J (transaxle case side) and ground. • Is there continuity?	Yes	Repair or replace TCM harness, then go to Step 9.
		No	Go to next step.
7	**INSPECT COUPLER COMPONENT (10-PIN) CONNECTOR FOR POOR CONNECTION** • Disconnect coupler component (10-pin) connector. • Check for poor connection (damaged, pulled-out, terminals, corrosion, etc.). • Are terminals okay?	Yes	Go to next step.
		No	Repair or replace terminals, then go to Step 9.
8	**INSPECT COUPLER COMPONENT (10-PIN) CIRCUIT FOR SHORT TO GROUND** • Verify that coupler component (10-pin) connector is disconnected. • Check continuity between coupler component (10-pin) connector terminal A (part side) and ground. • Is there continuity?	Yes	Repair or replace terminal component, then go to next step.
		No	Repair or replace coupler component, then go to next step.
9	**VERIFY TROUBLESHOOTING OF DTC P0763 COMPLETED** • Make sure to reconnect all disconnected connectors. • Clear DTC from memory using WDS or equivalent. • Drive vehicle in D range and make sure that gears shift smoothly from 1GR to 5GR. • Is same DTC present?	Yes	Replace TCM, then go to next step. (See K2–94 TCM REMOVAL/INSTALLATION.)
		No	Go to next step.
10	**VERIFY AFTER REPAIR PROCEDURE** • Perform “After Repair Procedure”. (See K2–116 AFTER REPAIR PROCEDURE.) • Is there any DTC present?	Yes	Go to applicable DTC inspection.
		No	Troubleshooting completed.

End Of Sta

DTC U0073

AME577018901W30

DTC U0073	CAN BUS OFF
DETECTION CONDITION	• CAN controller damaged. **Diagnostic support note:** • This is continuous monitor (CCM). • MIL illuminates if TCM detects the above malfunction condition. • FREEZE FRAME DATA is available. • HOLD lamp flashes. • DTC is stored in TCM memory.
POSSIBLE CAUSE	• CAN controller damaged.

Diagnostic procedure

STEP	INSPECTION		ACTION
1	**VERIFY FREEZE FRAME DATA HAS BEEN RECORDED** • Has FREEZE FRAME PID DATA been recorded?	Yes	Go to next step.
		No	Record FREEZE FRAME PID DATA on repair order, then go to next step.
2	**VERIFY RELATED REPAIR INFORMATION AVAILABILITY** • Check for related Service bulletins and/or on-line repair information availability. • Is any repair information available?	Yes	Perform repair or diagnosis according to available repair information. • If vehicle is not repaired, go to next step.
		No	Go to next step.
3	**VERIFY DTC U0073 DETECTED AGAIN** • Clear DTC from memory using WDS or equivalent. • Turn ignition key to OFF, then start engine. • Is same DTC present?	Yes	Replace TCM, then go to next step. (See K2–94 TCM REMOVAL/INSTALLATION.)
		No	Go to next step.
4	**VERIFY AFTER REPAIR PROCEDURE** • Perform “After Repair Procedure” (See K2–116 AFTER REPAIR PROCEDURE.) • Is there any DTC present?	Yes	Go to applicable DTC inspection. (See K2–118 DTC TABLE.)
		No	Troubleshooting completed.

End Of Sie

DTC U0100

AME577018901W31

DTC U0100	TCM cannot receive any signals from PCM
DETECTION CONDITION	• TCM cannot receive any signals from PCM. **Diagnostic support note:** • This is continuous monitor (CCM). • MIL illuminates if TCM detects the above malfunction condition. • FREEZE FRAME DATA is available. • HOLD lamp flashes. • DTC is stored in TCM memory.
POSSIBLE CAUSE	• Short to ground circuit between TCM terminal 2J and PCM terminal 49 • Short to ground circuit between TCM terminal 2M and PCM terminal 50 • Open circuit between TCM terminal 2J and PCM terminal 49 • Open circuit between TCM terminal 2M and PCM terminal 50 • Short to power circuit between TCM terminal 2J and PCM terminal 49 • Short to power circuit between TCM terminal 2M and PCM terminal 50 • Damaged TCM • Damaged PCM

DTC U0100	TCM cannot receive any signals from PCM

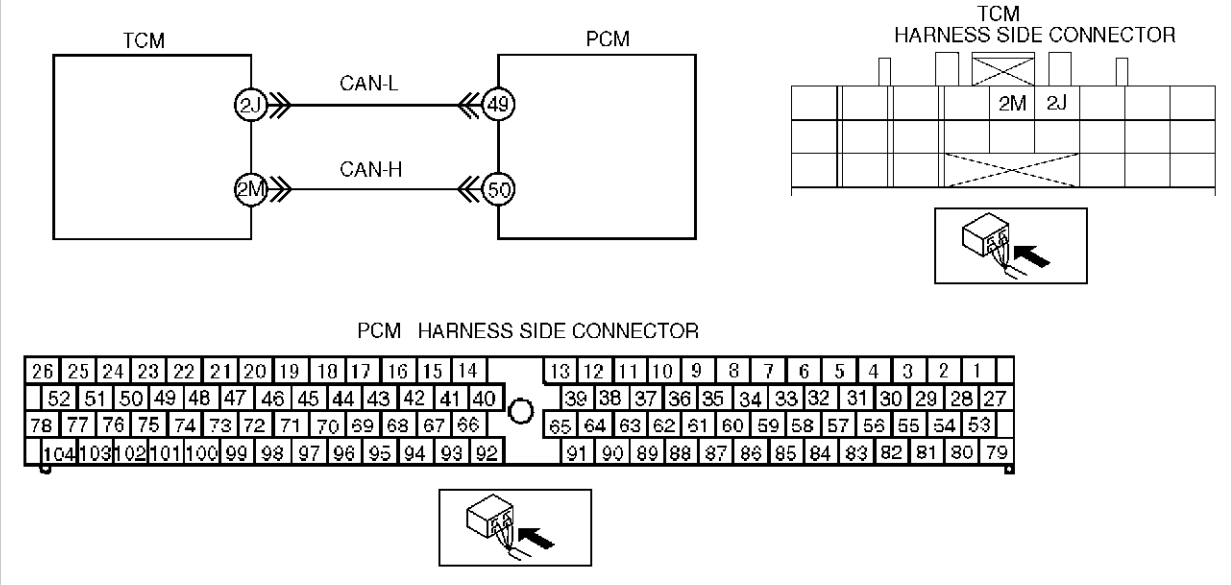

Diagnostic procedure

STEP	INSPECTION		ACTION
1	**VERIFY FREEZE FRAME DATA HAS BEEN RECORDED** • Has FREEZE FRAME DATA been recorded?	Yes	Go to next step.
		No	Record FREEZE FRAME DATA on repair order, then go to next step.
2	**VERIFY RELATED REPAIR INFORMATION AVAILABILITY** • Check for related Service Bulletins and/or on-line repair information availability. • Is any related repair information available?	Yes	Perform repair or diagnostic according to available repair information. • If vehicle is not repaired, go to next step.
		No	Go to next step.
3	**VERIFY RELATED DTC OR STORED DTCS** • Turn ignition key to OFF then ON (Engine OFF). • Verify related stored DTCs. • Is DTC U0073 for TCM present?	Yes	Go to appropriate DTC inspection. (See K2–174 DTC U0073)
		No	Go to next step.
4	**INSPECT POOR CONNECTION OF TCM CONNECTOR** • Turn ignition key to OFF. • Disconnect TCM connector. • Check for poor connection (damaged, pulled-out pins, corrosion, etc.). • Are there any malfunctions?	Yes	Repair terminal, then go to Step 9.
		No	Go to next step.
5	**CHECK CAN COMMUNICATION LINE FOR SHORT TO GROUND** • Check continuity between following terminals: — TCM connector terminal 2J and body ground — TCM connector terminal 2M and body ground • Is there continuity?	Yes	Repair or replace wiring harness, then go to Step 9.
		No	Go to next step.
6	**CHECK CAN COMMUNICATION LINE FOR SHORT TO POWER** • Measure voltage between following terminals: — TCM connector terminal 2J and body ground — TCM connector terminal 2M and body ground • Is voltage **B+**?	Yes	Repair or replace wiring harness, then go to Step 9.
		No	Go to next step.

STEP	INSPECTION		ACTION
7	**INSPECT POOR CONNECTION OF PCM CONNECTOR** • Turn ignition key to OFF. • Disconnect PCM connector. • Check for poor connection (damaged, pulled-out pins, corrosion, etc.). • Are there any malfunctions?	Yes	Repair terminal, then go to Step 9.
		No	Go to next step.
8	**CHECK CAN COMMUNICATION LINE FOR OPEN** • Disconnect PCM connector. • Check continuity between following terminals: — TCM connector terminal 2J and PCM connector terminal 49 — TCM connector terminal 2M and PCM connector terminal 50 • Is there continuity?	Yes	Repair or replace wiring harness, then go to next step.
		No	Go to next step.
9	**VERIFY TROUBLESHOOTING OF DTC U0100 COMPLETED** • Make sure to reconnect all disconnected connectors. • Clear DTC from TCM memory using WDS or equivalent. • Start engine and warm it up completely. • Is same DTC present?	Yes	Replace TCM, then go to next step.
		No	Go to next step.
10	**VERIFY AFTER REPAIR PROCEDURE** • Perform “After Repair Procedure” (See K2–116 AFTER REPAIR PROCEDURE.) • Is there any DTC present?	Yes	Go to applicable DTC inspection. (See F4–113 DTC TABLE.)
		No	Troubleshooting completed.

End Of Sie

PID/DATA MONITOR INSPECTION

AME577018901W32

1. Connect the **SSTs** (WDS or equivalent) to the DLC-2.
2. Turn the ignition switch to ON.
3. Measure the PID value.

Note

- Perform part inspection for the output device after TCM inspection.
- The PID/DATA MONITOR function monitors the calculated value of the input/output signals in the TCM. Therefore, if a monitored value of an output device is out of specification, it is necessary to inspect the monitored value of the input device related to the output device control. Since an output device malfunction is not directly indicated as a malfunction of the monitored value for the output device, it is necessary to inspect the output device individually using the simulation function, etc.

PID/DATA MONITOR AND RECORD function table

Monitor item (Definition)	Unit/ Condition	Condition/Specification	Action	TCM terminal
2-4 B Duty (2-4 brake solenoid vale)	ON/OFF	N position: ON L range stall: OFF	Inspect 2-4 brake solenoid valve. (See K2–84 SOLENOID VALVE INSPECTION.)	2V
BOO (Brake switch)	ON/OFF	Brake pedal depressed: ON Other: OFF	Inspect brake switch.	1U
PNP (TR switch (P/N position switch))	ON/OFF	P or N position: ON R position and all ranges: OFF	Inspect TR switch. (See K2–84 SOLENOID VALVE INSPECTION.)	–
FAT (FAT terminal (DLC))	ON/OFF	Ignition switch ON: OFF DTC output: ON—OFF	Inspect DLC FAT terminal and TCM connector terminal 1Q.	1Q
GEAR (Calculated gear range in TCM)	1ST/2ND/ 3RD/4TH/ 5TH	1GR: 1ST 2GR: 2ND 3GR: 3RD 4GR: 4TH 5GR: 5TH	Inspect following PIDs: THOP, TSS	–
H/C Duty (High clutch solenoid valve)	%	N position: OFF D range 1GR to 2GR shifting: ON	Inspect high clutch solenoid valve. (See K2–84 SOLENOID VALVE INSPECTION.)	2U
LPS (Pressure control solenoid)	%	Ignition switch ON: 0% Idle: 0—100%	Inspect pressure control solenoid. (See K2–84 SOLENOID VALVE INSPECTION.)	2Y
NSFT TIM (Neutral shift solenoid valve)	ON/OFF	N position: OFF R position inhibition control: ON	Inspect main relay. (See T–28 RELAY INSPECTION.) Inspect battery. (See G–10 BATTERY INSPECTION.)	2D
OSS (Intermediate sensor	rpm	Ignition switch ON: 0 rpm Idle: 700—800 rpm	Inspect intermediate sensor. (See K2–82 INTERMEDIATE SENSOR INSPECTION.)	1K, 1X
RDCN TIM (Reduction timing solenoid valve)	ON/OFF	N position: OFF D range: ON	Inspect reduction timing solenoid valve. (See K2–84 SOLENOID VALVE INSPECTION.)	2G
RPM (Engine speed)	rpm	Ignition switch ON: 0 rpm Idle: 700—800 rpm	Inspect TCM. (See K2–88 TCM INSPECTION.)	–
SSA/SS1 (Shift solenoid A)	ON/OFF	N position: ON D range 3GR: OFF	Inspect shift solenoid A. (See K2–84 SOLENOID VALVE INSPECTION.)	–
SSB/SS2 (Shift solenoid B)	ON/OFF	N position: ON D range 4GR: OFF	Inspect shift solenoid B. (See K2–84 SOLENOID VALVE INSPECTION.)	–
SSC/SS3 (Shift solenoid C)	ON/OFF	N position: ON D range 2GR: OFF	Inspect shift solenoid C. (See K2–84 SOLENOID VALVE INSPECTION.)	–
TAT (TAT terminal)	ON/OFF	Open terminal TAT: OFF Short terminal TAT: OFF	Inspect DLC TAT terminal and TCM connector terminal 1A.	1A
TCCC (TCC solenoid valve)	%	TCC operating: ON TCC non operating: OFF	Inspect TCC solenoid valve. (See K2–84 SOLENOID VALVE INSPECTION.)	2S
TCIL (HOLD lamp)	ON/OFF	O/D OFF mode: ON Other modes: OFF	Inspect HOLD switch. (See K2–75 HOLD SWITCH INSPECTION.)	1E
TCS (HOLD switch)	ON/OFF	HOLD switch pressed: ON Other: OFF	Inspect HOLD switch. (See K2–75 HOLD SWITCH INSPECTION.)	2I
TFT (ATF temperature)	°C	ATF 20 °C {68 °F}: 20 °C {68 °F} ATF 60 °C {140 °F}: 60 °C {140 °F}	Inspect TFT sensor. (See K2–80 TRANSAXLE FLUID TEMPERATURE (TFT) SENSOR INSPECTION.)	1B, 1F

Monitor item (Definition)	Unit/ Condition	Condition/Specification	Action	TCM terminal
TFTV (ATF temperature signal voltage)	V	ATF 20 °C {68 °F}: 1.55 V ATF 60°C {140 °F}: 0.7 V	Inspect TFT sensor. (See K2–80 TRANSAXLE FLUID TEMPERATURE (TFT) SENSOR INSPECTION.)	1B, 1F
THOP (Throttle position)	%	CTP:0% WOT: 100%	Inspect TCM. (See K2–88 TCM INSPECTION.)	–
TRD (TR switch [D range])	ON/OFF	D range: ON Other ranges and all positions: OFF	Inspect TR switch. (See K2–76 TRANSAXLE RANGE (TR) SWITCH INSPECTION.)	1Z
TRL (TR switch [L range])	ON/OFF	L range: ON Other ranges and all positions: OFF	Inspect TR switch. (See K2–76 TRANSAXLE RANGE (TR) SWITCH INSPECTION.)	2C
TRR (TR switch [R position])	ON/OFF	R position: ON Other positions and all ranges: OFF	Inspect TR switch. (See K2–76 TRANSAXLE RANGE (TR) SWITCH INSPECTION.)	1W
TRS (TR switch [S range])	ON/OFF	S range: ON Other ranges and all positions: OFF	Inspect TR switch. (See K2–76 TRANSAXLE RANGE (TR) SWITCH INSPECTION.)	1AA
TSS (Input/turbine speed sensor)	rpm	Ignition switch ON: 0 rpm Idle: 700—800 rpm	Inspect input/turbine speed sensor. (See K2–81 INPUT/TURBINE SPEED SENSOR INSPECTION.)	1N, 2F
VPWR (Battery voltage)	V	IG ON: B+ Idle: 13—14 V	Inspect main relay.	1P
VSS (Vehicle speed)	km/h	Vehicle speed 20 km/h {12.5 mph}: 20 km/h {12.5 mph} Vehicle speed 40 km/h {25 mph}: 40 km/h {25 mph}	Inspect vehicle speedometer sensor. (See K2–83 VEHICLE SPEEDOMETER SENSOR (VSS) INSPECTION.)	1V, 1M

End Of Sie

TROUBLESHOOTING

AUTOMATIC TRANSAXLE CONTROL SYSTEM WIRING DIAGRAM

AME578001030W01

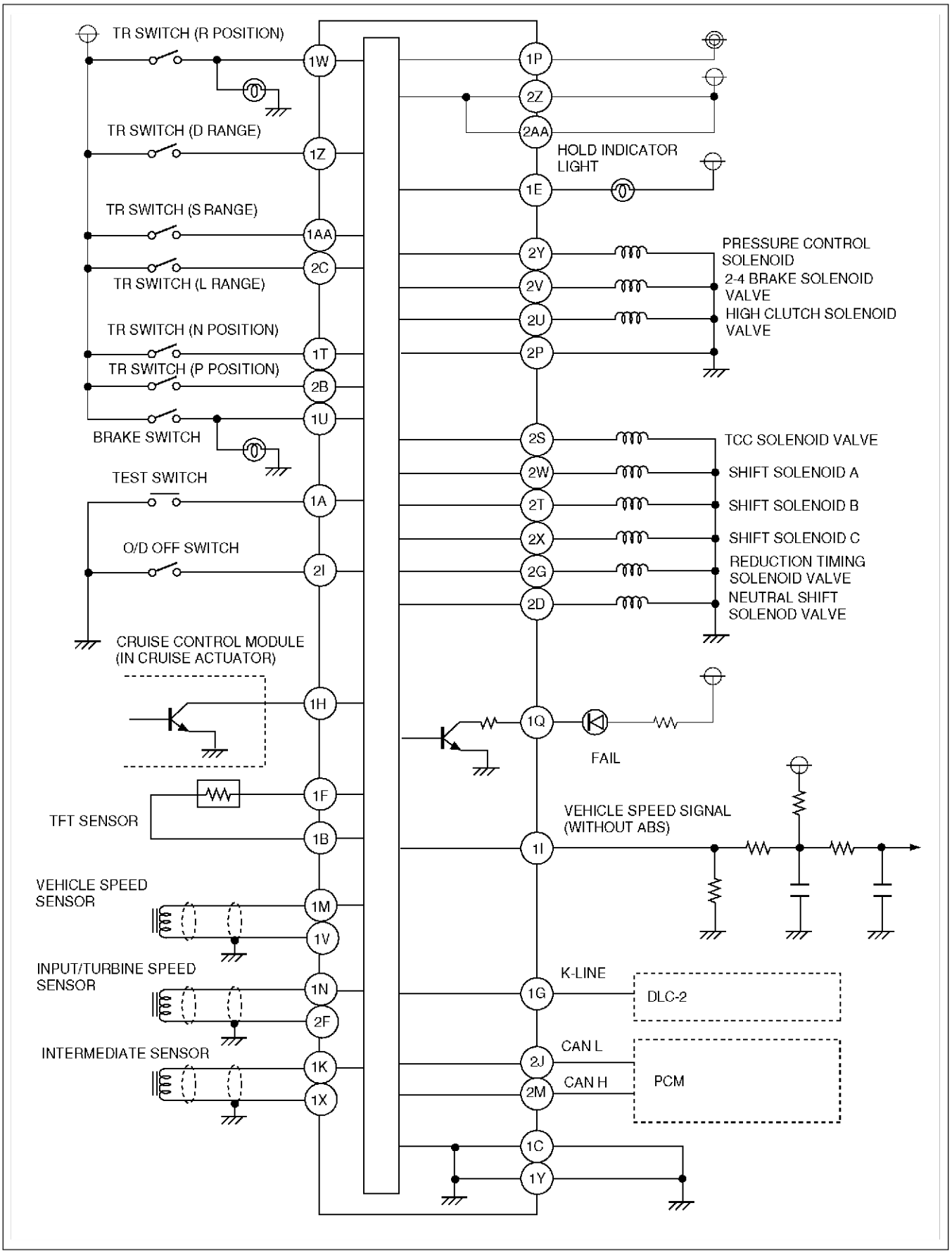

AME5780W005

End Of Sto

FOREWORD

AME578001030W02

- When the customer reports a vehicle malfunction, check the malfunction indicator lamp (MIL) indication, HOLD lamp flash, and diagnostic trouble code (DTC), then diagnose the malfunction according to following flowchart.
  — If the DTC exists, diagnose the applicable DTC inspection. (See K2–118 DTC TABLE.)
  — If the DTC does not exist and the MIL does not illuminate and HOLD lamp flash, diagnose the applicable symptom troubleshooting. (See K2–182 AUTOMATIC TRANSAXLE SYMPTOM TROUBLESHOOTING.)

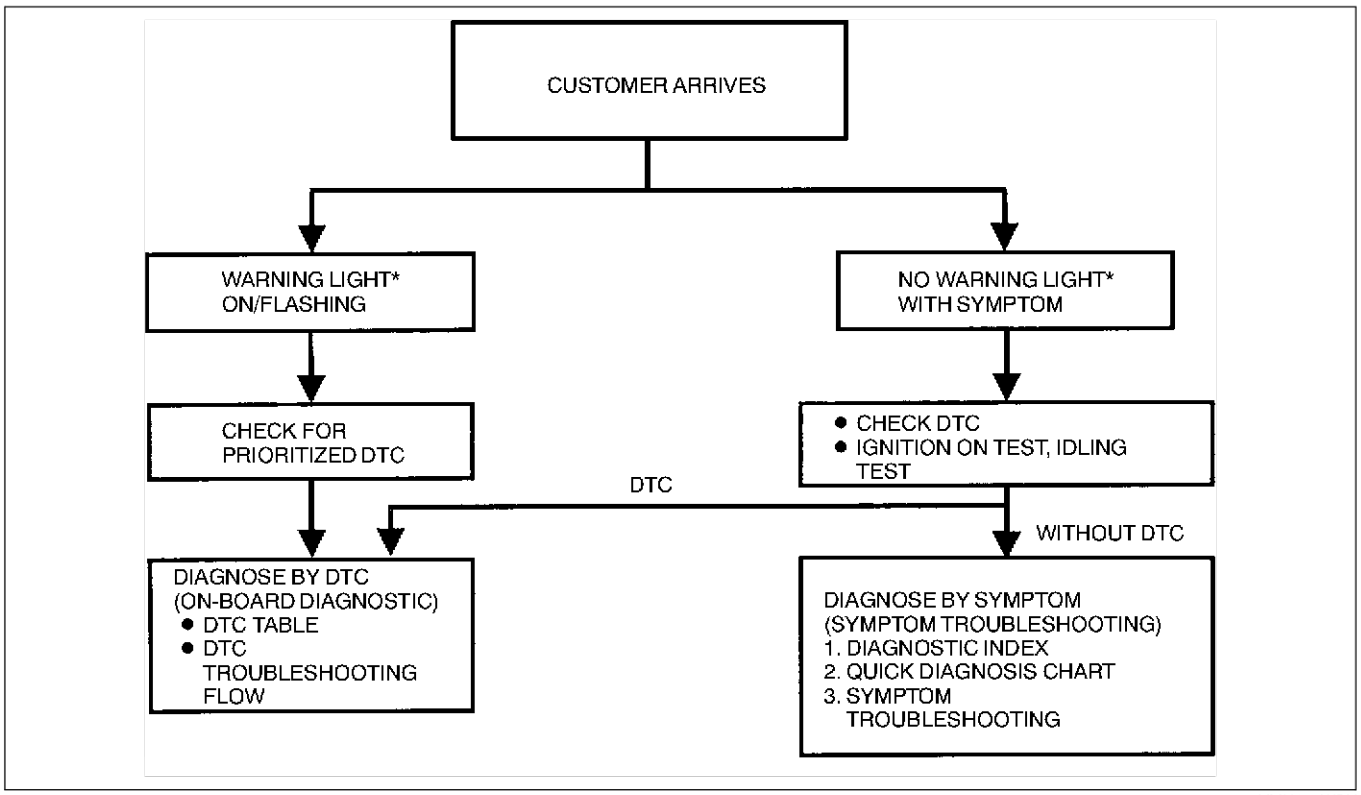

*: Malfunction Indicator lamp (MIL), HOLD lamp.

End Of Sie

AUTOMATIC TRANSAXLE BASIC INSPECTION

AME578001030W03

STEP	INSPECTION		ACTION
1	• Turn ignition switch to ON. • Does HOLD lamp (illuminate/go out) corresponding to HOLD switch (on/off)?	Yes	Go to next step.
		No	Perform symptom troubleshooting No.26 “HOLD lamp does not illuminate when HOLD switch is turned on”, or No.27 “HOLD lamp illuminates when HOLD switch is not turned to on”.
2	• Turn ignition switch to ON. • When selector lever is moved, are selector lever position and indicator aligned? Also, when other ranges are selected from N or P during idling, does vehicle creep **within 1 — 2 seconds**?	Yes	Go to next step.
		No	Inspect selector lever. (See K2–112 SELECTOR LEVER INSPECTION.) Repair or replace defected areas.
3	• Inspect ATF color and condition. (See K2–74 Automatic Transaxle Fluid (ATF) Condition Inspection.) • Are ATF color and odor normal?	Yes	Go to next step.
		No	Repair or replace any defective parts according to inspection result. Flush ATX and cooler line as necessary.
4	• Perform line pressure test. (See K2–67 Line Pressure Test.) • Is line pressure okay?	Yes	Go to next step.
		No	Adjust accelerator cable as necessary. Repair or replace any defective parts according to inspection result.
5	• Perform stall test. (SeeK2–69 Stall Speed Test.) • Is stall speed okay?	Yes	Go to next step.
		No	Repair or replace any defective parts according to inspection result.
6	• Inspect value at following PIDs using WDS or equivalent. (See K2–88 TCM INSPECTION.) — TFT — TFT V — VPWR (VPWR–TCM) — TRD — ECT — ECT V — TRL — TCS — Rpm (RPM–TCM) — TRR — TRS — TP (THOP) — CCP/PNP (PNP, TCM) — TSS — VSS (VSS–TCM) — OSS • Are PID values okay?	Yes	Perform symptom troubleshooting and follow procedures.
		No	Repair or replace any defective parts according to inspection result.

End Of Ste

AUTOMATIC TRANSAXLE SYMPTOM TROUBLESHOOTING

AME578001030W04

Diagnostic Index

- Use the chart below to verify the symptoms of the trouble in order to diagnose the appropriate area.

No.	TROUBLESHOOTING ITEM	DESCRIPTION	PAGE
1	• Vehicle does not move in D, S, L ranges, or in R position	• Vehicle does not move when accelerator pedal depressed.	(See K2–187 NO.1 VEHICLE DOES NOT MOVE IN D, S, L RANGES, OR IN R POSITION.)
2	• Vehicle moves in N position	• Vehicle creeps in N position. • Vehicle creeps if brake pedal not depressed in N position.	(See K2–188 NO.2 VEHICLE MOVES IN N POSITION.)
3	• Vehicle moves in P position, or parking gear does not disengage when P is disengaged	• Vehicle rolls when on a downward slope and tires do not lock in P position. • Tires locked when P disengaged, vehicle does not move in D, S, L ranges, and R position when accelerator pedal depressed, and engine remains in stall condition.	(See K2–188 NO.3 VEHICLE MOVES IN P POSITION, OR PARKING GEAR DOES NOT DISENGAGE WHEN P IS DISENGAGED.)
4	• Excessive creep	• Vehicle accelerates in D, S, L ranges, and R position without depressing accelerator pedal.	(See K2–188 NO.4 EXCESSIVE CREEP.)
5	• No creep at all	• Vehicle does not move in D, S, L ranges, or R position when idling on flat paved road.	(See K2–189 NO.5 NO CREEP AT ALL.)
6	• Low maximum speed and poor acceleration	• Vehicle acceleration poor at start. • Delayed acceleration when accelerator pedal depressed while driving.	(See K2–190 NO.6 LOW MAXIMUM SPEED AND POOR ACCELERATION.)
7	• No shifting	• Single shift range only. • Sometimes it shifts correctly.	(See K2–191 NO.7 NO SHIFTING.)
8	• Does not shift to fifth gear (5GR)	• Vehicle does not upshift from 4GR to 5GR even though vehicle speed increased. • Vehicle does not shift to 5GR even though accelerator pedal released in D range at **60 km/h {37 mph}**.	(See K2–191 NO.8 DOES NOT SHIFT TO FIFTH GEAR (5GR).)
9	• Abnormal shifting	• Shifts incorrectly (incorrect shift pattern).	(See K2–192 NO.9 ABNORMAL SHIFTING.)
10	• Frequent shifting	• Downshifting occurs immediately even when accelerator pedal depressed slightly in D, S, L ranges except HOLD mode.	(See K2–193 NO.10 FREQUENT SHIFTING.)
11	• Shift point is high or low	• Shift point considerably different from automatic shift diagram. • Shift delays when accelerating. • Shift occurs quickly when accelerating and engine speed does not increase.	(See K2–193 NO.11 SHIFT POINT IS HIGH OR LOW.)
12	• Torque converter clutch (TCC) non-operation	• TCC does not operate when vehicle reaches TCC operation range.	(See K2–194 NO.12 TORQUE CONVERTER CLUTCH (TCC) NON-OPERATION.)
13	• No kickdown	• Does not downshift when accelerator pedal fully depressed within kickdown range.	(See K2–194 NO.13 NO KICKDOWN.)
14	• Engine flares up or slips when upshifting or downshifting	• When accelerator pedal depressed for driveway, engine speed increases but vehicle speed increase slowly. • When accelerator pedal depressed while driving, engine speed increases but vehicle speed does not increase.	(See K2–195 NO.14 ENGINE FLARES UP OR SLIPS WHEN UPSHIFTING OR DOWNSHIFTING.)
15	• Engine flares up or slips when accelerating vehicle	• Engine flares up when accelerator pedal depressed for upshifting. • Engine flares up suddenly when accelerator pedal depressed for downshifting.	(See K2–195 NO.15 ENGINE FLARES UP OR SLIPS WHEN ACCELERATING VEHICLE.)

No.	TROUBLESHOOTING ITEM	DESCRIPTION	PAGE
16	• Judder upon torque converter clutch (TCC) operation	• Vehicle jolts when TCC engaged.	(See K2–196 NO.16 JUDDER UPON TORQUE CONVERTER CLUTCH (TCC) OPERATION.)
17	• Excessive shift shock from N to D or N to R position/range	• Strong shock felt when shifting from N to D or N to R position/range at idle.	(See K2–196 NO.17 EXCESSIVE SHIFT SHOCK FROM N TO D OR N TO R POSITION/RANGE.)
18	• Excessive shift shock is given when upshifting and downshifting	• Excessive shift shock felt when depressing accelerator pedal to accelerate at upshifting. • During cruising, excessive shift shock felt when depressing accelerator pedal at downshifting.	(See K2–197 NO.18 EXCESSIVE SHIFT SHOCK IS GIVEN WHEN UPSHIFTING AND DOWNSHIFTING.)
19	• Excessive shift shock on torque converter clutch (TCC)	• Strong shock felt when TCC engaged.	(See K2–197 NO.19 EXCESSIVE SHIFT SHOCK ON TORQUE CONVERTER CLUTCH (TCC).)
20	• Noise occurs at idle when vehicle is stopped in all positions/ranges	• Transaxle noisy in all positions and ranges when vehicle idling.	(See K2–197 NO.20 NOISE OCCURS AT IDLE WHEN VEHICLE IS STOPPED IN ALL POSITIONS/RANGES.)
21	• Noise occurs at idle when vehicle is stopped in D, S, L ranges, or in R position	• Transaxle noisy in driving ranges when vehicle idling.	(See K2–198 NO.21 NOISE OCCURS AT IDLE WHEN VEHICLE IS STOPPED IN D, S, L RANGES, OR IN R POSITION.)
22	• No engine braking in L range	• Engine speed drops to idle but vehicle coasts when accelerator pedal released during cruising at medium to high speeds. • Engine speed drops to idle but vehicle coasts when accelerator pedal released when in L range at low vehicle speed.	(See K2–198 NO.22 NO ENGINE BRAKING IN L RANGE.)
23	• Transaxle overheats	• Burnt smell emitted from transaxle. • Smoke emitted from transaxle.	(See K2–199 NO.23 TRANSAXLE OVERHEATS.)
24	• Engine stalls when shifted to D, S, L ranges, or in R position	• Engine stalls when shifting from N or P position to D, S, L ranges or R position at idle.	(See K2–199 NO.24 ENGINE STALLS WHEN SHIFTED TO D, S, L RANGES, OR IN R POSITION.)
25	• Engine stalls when driving at slow speeds or stopping	• Engine stalls when brake pedal depressed while driving at low speed or stopping.	(See K2–200 NO.25 ENGINE STALLS WHEN DRIVING AT SLOW SPEED OR STOPPING.)
26	• HOLD lamp does not illuminate when HOLD switch is turned on	• HOLD lamp in dashboard does not illuminate when HOLD switch turned on and ignition switch at ON.	(See K2–200 NO.26 HOLD LAMP DOES NOT ILLUMINATES WHEN HOLD SWITCH IS TURNED ON.)
27	• HOLD lamp illuminates when HOLD switch is not turned on	• HOLD lamp in dashboard illuminates even though HOLD switch turned off and ignition switch at ON.	(See K2–201 NO.27 HOLD LAMP ILLUMINATES WHEN HOLD SWITCH IS NOT TURNED ON.)

Quick Diagnosis Chart

	Symptom item / Cause of trouble	Selector lever is misadjusted	Not within line pressure specification	Idle speed is misadjusted	IG timing is misadjusted	TR switch is misadjusted	Open/short	Engine speed signal	CAN signal	Signal is not input	Vehicle speedometer sensor	Abnormal signal is input	Signal is not input	Input/turbine speed sensor	Abnormal signal is input	Signal is not input	Intermediate sensor	Abnormal signal is input	Signal is not input	HOLD switch	Abnormal signal is input	Abnormal signal is input	Throttle opening	CAN signal	Signal is not input	N-D select	Open/short	Transaxle range switch	Open/short	Power supply, GND
							Electrical system components																							
							ATX outer parts																							
1	Vehicle does not move in D, S, L ranges, or in R position	X	X																										
2	Vehicle moves in N position	X																											
3	Vehicle moves in P position, or parking gear does not disengage when P is disengaged	X																											
4	Excessive creep			X	X																								
5	No creep at all		X																										
6	Low maximum speed and poor acceleration		X		X	X				X													X						X
7	No shifting																						X						X
8	Does not shift to fifth gear (5GR)	X																		X									
9	Abnormal shifting	X								X													X				X	X	X
10	Frequent shifting									X													X						X
11	Shift point is high or low							X		X													X				X		
12	Torque converter clutch (TCC) non-operation						X																						
13	No kickdown									X													X						X
14	Engine flares up or slips when upshifting or downshifting		X							X			X			X			X				X				X	X	X
15	Engine flares up or slip when accelerating vehicle		X							X													X						X
16	Judder upon torque converter clutch (TCC) operation		X				X			X			X			X			X				X						X
17	Excessive shift shock from N to D or N to R position/range	X	X	X		X	X						X			X			X				X		X		X	X	X
18	Excessive shift shock is given when upshifting and downshifting		X		X					X			X			X			X				X				X		X	X
19	Excessive shift shock on torque converter clutch (TCC)		X		X		X			X			X			X			X				X				X		X	X
20	Noise occurs at idle when vehicle is stopped in all positions/ranges		X	X		X																	X						
21	Noise occurs at idle when vehicle is stopped in D, S, L ranges, or in R position		X																										
22	No engine braking in L range																										X	X	
23	Transaxle overheats		X																										
24	Engine stalls when shifted to D, S, L ranges, or in R position		X	X	X																								
25	Engine stalls when driving at slow speeds or stopping			X		X																							
26	HOLD lamp does not illuminate when HOLD switch is turned on																			X									
27	HOLD lamp does not illuminate when HOLD switch is not turned on																			X	X								

AME5780W002

	Symptom item / Cause of trouble	Open/short	Malfunction signal is input	Open/short	Open/short	Open/short	Open/short	Open/short	Open/short	Open/short	Open/short	Open/short	Open/short	ATF amount	Control valve spool is not operating properly	Low clutch solenoid accumulator is not operating properly	2-4 brake accumulator is not operating properly	High clutch accumulator is not operating properly	Direct clutch accumulator is not operating properly
		Electrical system components												Hydraulic system components					
		ATX inner parts												Control valve body					
		TFT sensor		Pressure control solenoid	TCC solenoid valve	High clutch solenoid valve	2-4 brake solenoid valve	Shift solenoid A	Shift solenoid B	Shift solenoid C	Neutral shift solenoid valve	Reciuction timing solenoid	GND return line						
1	Vehicle does not move in D, S,L ranges, or in R position													X					
2	Vehicle moves in N position																		
3	Vehicle moves in P position, or parking gear does not disengage when P is disengaged																		
4	Excessive creep																		
5	No creep at all								X	X			X	X	X				
6	Low maximum speed and poor acceleration			X	X			X	X	X			X		X				
7	No shifting												X		X				
8	Does not shift to fifth gear (5GR)	X	X																
9	Abnormal shifting				X			X	X	X			X		X				
10	Frequent shifting																		
11	Shift point is high or low														X				
12	Torque converter clutch (TCC) non-operation	X	X		X										X				
13	No kickdown							X	X	X			X		X				
14	Engine flares up or slips when upshifting or downshifting		X	X				X	X	X			X	X	X				
15	Engine flares up or slip when accelerating vehicle			X	X			X	X	X			X	X	X				
16	Judder upon torque converter clutch (TCC) operation			X	X										X				
17	Excessive shift shock from N to D or N to R position/range	X	X	X									X		X	X		X	
18	Excessive shift shock is given when upshifting and downshifting	X	X	X	X	X	X	X	X	X			X		X	X	X	X	X
19	Excessive shift shock on torque converter clutch (TCC)		X	X	X										X				
20	Noise occurs at idle when vehicle is stopped in all positions/ranges			X	X	X	X												
21	Noise occurs at idle when vehicle is stopped in D, S,L ranges, or in R position													X					
22	No engine braking in L range											X			X				
23	Transaxle overheats													X	X				
24	Engine stalls when shifted to D, S,L ranges, or in R position				X										X				
25	Engine stalls when driving at slow speeds or stopping				X									X	X				
26	HOLD lamp does not illuminate when HOLD switch is turned on																		
27	HOLD lamp does not illuminate when HOLD switch is not turned on																		

AME5780W003

	Symptom item / Cause of trouble	Hydraulic system components											Powertrain				
		Control valve body															
		Reduction accumulator is not operating properly	Clogging	Pressure control solenoid hydraulic circuit	Clogging	TCC solenoid valve hydraulic circuit	Clogging	High clutch solenoid valve hydraulic circuit	Clogging	2-4 brake solenoid valve hydraulic circuit	Clogging	Shift solenoid A hydraulic circuit	Clogging	Shift solenoid B hydraulic circuit	Clogging	Shift solenoid C hydraulic circuit	Clogging	Neutral shift solenoid valve	Clogging	Reduction timing solenoid valve	Oil cooler is not operating properly	Slipping (clutch, brake)	Burned (Clutch, brake)	Torque converter is not operating properly	TCC piston is cracking or peeling	TCC piston is not operating properly
1	Vehicle does not move in D, S, L ranges, or in R position																					X	X	X	X	
2	Vehicle moves in N position																						X			
3	Vehicle moves in P position, or parking gear does not disengage when P is disengaged																									
4	Excessive creep																									
5	No creep at all												X	X	X							X	X	X	X	
6	Low maximum speed and poor acceleration											X	X	X								X	X	X		
7	No shifting																			X		X	X			
8	Does not shift to fifth gear (5GR)																			X						
9	Abnormal shifting											X	X	X								X	X			
10	Frequent shifting																									
11	Shift point is high or low																									
12	Torque converter clutch (TCC) non-operation																							X	X	X
13	No kickdown											X	X	X												
14	Engine flares up or slips when upshifting or downshifting											X	X	X								X	X			
15	Engine flares up or slip when accelerating vehicle																					X			X	
16	Judder upon torque converter clutch (TCC) operation																							X	X	X
17	Excessive shift shock from N to D or N to R position/range			X		X																	X			
18	Excessive shift shock is given when upshifting and downshifting	X	X	X	X	X	X	X	X		X		X	X								X	X			
19	Excessive shift shock on torque converter clutch (TCC)																								X	X
20	Noise occurs at idle when vehicle is stopped in all positions/ranges																									
21	Noise occurs at idle when vehicle is stopped in D, S, L ranges, or in R position																									
22	No engine braking in L range																			X		X				
23	Transaxle overheats																				X	X	X	X	X	X
24	Engine stalls when shifted to D, S, L ranges, or in R position				X																X			X		X
25	Engine stalls when driving at slow speeds or stopping				X																X			X		X
26	HOLD lamp does not illuminate when HOLD switch is turned on																									
27	HOLD lamp does not illuminate when HOLD switch is not turned on																									

AME5780W004

NO.1 VEHICLE DOES NOT MOVE IN D, S, L RANGES, OR IN R POSITION

AME578001030W05

1	Vehicle does not move in D, S, L ranges, or in R position
DESCRIPTION	• Vehicle does not move when accelerator pedal depressed.
POSSIBLE CAUSE	• If vehicle does not move in D, S, L ranges or R position, basically, malfunction is in ATX. (Vehicle will move even with a malfunction in TCM.) Since a malfunction in sensor circuit or output circuit is cause of malfunction in ATX, inspect sensors, output circuit, and related harnesses. — Clutch slipped, worn (D, S, L ranges-Low clutch, Low one-way clutch, Reduction one-way clutch, R position-Reverse clutch, Low and reverse brake, Reduction brake) • Line pressure low • Malfunction of shift solenoid A, B, or C • Malfunction of sensor ground • Malfunction of body ground • Malfunction of control valve body — Malfunction of selector lever — Parking mechanism not properly operated — Malfunction of torque converter **Note** • Before following troubleshooting steps, make sure that Automatic Transaxle On-Board Diagnostic and Automatic Transaxle Basic Inspection are conducted.

Diagnostic procedure

STEP	INSPECTION		ACTION
1	• With vehicle stopped on a flat, paved road and engine off, does vehicle move when pushed? (in D, S ranges or N, R positions and brake released)	Yes	Go to next step.
		No	Inspect for parking mechanism. (See ATX Workshop Manual.)
2	• Start engine. • Does vehicle move when selector lever in between N position and D range?	Yes	Inspect or adjust selector lever. (See K2–112 SELECTOR LEVER INSPECTION.) (See K2–112 SELECTOR CABLE ADJUSTMENT.)
		No	Go to next step.
3	• Stop engine. • Inspect pressure control solenoid circuit. • Is it okay?	Yes	• Overhaul control valve body and repair or replace any defective parts. (See ATX Workshop Manual.) — If problem remains, replace or overhaul transaxle and repair or replace any defective parts. (See K2–95 AUTOMATIC TRANSAXLE REMOVAL/INSTALLATION.) (See ATX workshop Manual.)
		No	• Inspect for pressure control solenoid mechanical stuck. (See K2–84 SOLENOID VALVE INSPECTION.) — If pressure control solenoid okay, inspect for open or short circuit between TCM connector terminal 2Y and pressure control solenoid connector terminal D.
4	• Verify test results. — If okay, return to diagnostic index to service any additional symptoms. — If malfunction remains, inspect related Service Bulletins and/or On-line Repair Information and perform repair or diagnosis. — If vehicle repaired, troubleshooting completed. — If vehicle not repaired or additional diagnostic information not available, replace TCM.		

End Of Sie

NO.2 VEHICLE MOVES IN N POSITION

AME578001030W06

2	Vehicle moves in N position
DESCRIPTION	• Vehicle creeps in N position. • Vehicle creeps if brake pedal not depressed in N position.
POSSIBLE CAUSE	• If vehicle moves in N position, basically, malfunction is in ATX. Since a malfunction in sensor circuit or output circuit is cause of malfunction in ATX, inspect sensors, output circuit, and related harnesses. — Clutch burned (Low clutch, Low one-way clutch, Low and reverse brake) • Line pressure low • Malfunction of control valve body — Selector lever position disparity (Although the selector indicator shows N position, hydraulic circuit shows D range or R position) **Note** • Before following troubleshooting steps, make sure that Automatic Transaxle On-Board Diagnostic and Automatic Transaxle Basic Inspection are conducted.

Diagnostic procedure

STEP	INSPECTION		ACTION
1	• Does vehicle creep when selector lever moved slightly in N position?	Yes	• Overhaul control valve body and repair or replace any defective parts. (See ATX Workshop Manual.) — If problem remains, replace or overhaul transaxle and repair or replace any defective parts. (See K2–95 AUTOMATIC TRANSAXLE REMOVAL/INSTALLATION.) (See ATX Workshop Manual.)
		No	Inspect and adjust selector lever. (See K2–112 SELECTOR LEVER INSPECTION.) (See K2–112 SELECTOR CABLE ADJUSTMENT.)
2	• Verify test results. — If okay, return to diagnostic index to service any additional symptoms. — If malfunction remains, inspect related Service Bulletins and/or On-line Repair Information and perform repair or diagnosis. — If vehicle repaired, troubleshooting completed. — If vehicle not repaired or additional diagnostic information not available, replace TCM.		

End Of Sie

NO.3 VEHICLE MOVES IN P POSITION, OR PARKING GEAR DOES NOT DISENGAGE WHEN P IS DISENGAGED

AME578001030W07

3	Vehicle moves in P position, or parking gear does not disengage when P is disengaged
DESCRIPTION	• Vehicle rolls when on a downward slope and tires do not lock in P position. • Tires locked when P disengaged, vehicle does not move in D, S, L ranges, and R position when accelerator pedal depressed, and engine remains in stall condition.
POSSIBLE CAUSE	• Malfunction of parking mechanism (May have effect on noise or shock from transaxle) • Improper adjustment of selector lever • If vehicle moves in N position, perform symptom troubleshooting No.2 “Vehicle moves in N position” **Note** • Before following troubleshooting steps, make sure that Automatic Transaxle On-Board Diagnostic and Automatic Transaxle Basic Inspection are conducted.

End Of Sie

NO.4 EXCESSIVE CREEP

AME578001030W08

4	Excessive creep
DESCRIPTION	• Vehicle accelerates in D, S, L ranges, and R position without depressing accelerator pedal.
POSSIBLE CAUSE	• Engine idle speed high (transaxle system is not cause of problem) • Go to symptom troubleshooting No.9 “Fast idle/runs on” (See F4–270 NO.9 FAST IDLE/RUNS ON.) **Note** • Before following troubleshooting steps, make sure that Automatic Transaxle On-Board Diagnostic and Automatic Transaxle Basic Inspection are conducted.

End Of Sie

NO.5 NO CREEP AT ALL

AME578001030W09

5	No creep at all
DESCRIPTION	• Vehicle does not move in D, S, L ranges, or R position when idling on flat paved road.
POSSIBLE CAUSE	• Either engine output low or there is clutch circuit slippage. — Clutch burned • Line pressure low • Malfunction of shift solenoid A, B, or C • Malfunction of body ground • Malfunction of control valve body — Transaxle fixed in 4GR (Operation of fail-safe function) • Short or open circuit in wiring • Poor connection of connector • Electronic parts of output and input system malfunctioning — Engine torque is not start • Malfunction of torque converter **Note** • Before following troubleshooting steps, make sure that Automatic Transaxle On-Board Diagnostic and Automatic Transaxle Basic Inspection are conducted.

Diagnostic procedure

STEP	INSPECTION		ACTION
1	• Does vehicle creep in P and/or N position?	Yes	Inspect or adjust the selector lever. (See K2–112 SELECTOR LEVER INSPECTION.) (See K2–112 SELECTOR CABLE ADJUSTMENT.)
		No	Go to next step.
2	• Stop engine. • Inspect pressure control solenoid circuit. • Is it okay?	Yes	Go to next step.
		No	• Inspect for pressure control solenoid mechanical stuck. (See K2–84 SOLENOID VALVE INSPECTION.) — If pressure control solenoid okay, inspect for open or short circuit between TCM connector terminal 2Y and pressure control solenoid connector terminal D.
3	• Remove torque converter. • Inspect torque converter. (See ATX Workshop Manual.) • Is torque converter okay?	Yes	• Overhaul control valve body and repair or replace any defective parts. (See ATX Workshop Manual.) — If problem remains, replace or overhaul transaxle and repair or replace any defective parts. (See K2–95 AUTOMATIC TRANSAXLE REMOVAL/INSTALLATION.) (See ATX Workshop Manual.)
		No	Replace torque converter.
4	• Verify test results. — If okay, return to diagnostic index to service any additional symptoms. — If malfunction remains, inspect related Service Bulletins and/or On-line Repair Information and perform repair or diagnosis. — If vehicle repaired, troubleshooting completed. — If vehicle not repaired or additional diagnostic information not available, replace TCM.		

End Of Ste

NO.6 LOW MAXIMUM SPEED AND POOR ACCELERATION

AME578001030W10

6	Low maximum speed and poor acceleration
DESCRIPTION	• Vehicle acceleration poor at start. • Delayed acceleration when accelerator pedal depressed while driving.
POSSIBLE CAUSE	• If clutch is stuck or does not stay in 4GR, malfunction is in engine circuit. — Clutch slipped, burned • Line pressure low • Incorrect throttle position signal • Malfunction of VSS • Malfunction of input/turbine speed sensor • Malfunction of sensor ground • Malfunction of shift solenoids A, B, or C • Malfunction of body ground • Malfunction of control valve body — Transaxle fixed in 4GR (Operation of fail-safe function) • Short or open circuit in wiring • Poor connection of connector • Electronic parts of output and input system malfunction are malfunctioning — Insufficient starting torque (Suspected when in-gear condition, shift control and engine circuit are normal) • Malfunction of torque converter (Poor operation, sticking) — Engagement of TCC operation range (Operation of fail-safe function) • Malfunction of TFT sensor (Short or open circuit) **Note** • Before following troubleshooting steps, make sure that Automatic Transaxle On-Board Diagnostic and Automatic Transaxle Basic Inspection are conducted.

Diagnostic procedure

STEP	INSPECTION		ACTION
1	• With ignition switch at ON, does HOLD lamp indication correspond to HOLD switch operation?	Yes	Go to next step.
		No	Go to symptom troubleshooting No.26 “HOLD lamp does not illuminate when HOLD switch is turned on”, or No.27 “HOLD lamp illuminates when HOLD switch is not turned on”.
2	• Go to symptom troubleshooting No.12 “Lack/loss of power-acceleration/cruise”. (See F4–275 NO.12 LACK/LOSS OF POWER-ACCELERATION/CRUISE.) • Does engine control system okay?	Yes	Go to next step.
		No	Repair or replace any defective parts according to inspection results.
3	• Stop engine. • Inspect shift solenoid A, B, or C. • Are they okay?	Yes	Go to next step.
		No	• Inspect for shift solenoid mechanical stuck. (See K2–84 SOLENOID VALVE INSPECTION.) — If shift solenoids okay, inspect for open or short circuit between TCM connector terminals 2W, 2T, 2X and pressure control solenoid connector terminals I, G, or F.
4	• Remove torque converter. • Inspect torque converter. (See ATX Workshop Manual.) • Is torque converter okay?	Yes	• Overhaul control valve body and repair or replace any defective parts. (See ATX Workshop Manual.) — If problem remains, replace or overhaul transaxle and repair or replace any defective parts. (See K2–95 AUTOMATIC TRANSAXLE REMOVAL/INSTALLATION.) (See ATX Workshop Manual.)
		No	Replace torque converter.
5	• Verify test results. — If okay, return to diagnostic index to service any additional symptoms. — If malfunction remains, inspect related Service Bulletins and/or On-line Repair Information and perform repair or diagnosis. — If vehicle repaired, troubleshooting completed. — If vehicle not repaired or additional diagnostic information not available, replace TCM.		

End Of Se

NO.7 NO SHIFTING

AME578001030W11

7	No shifting
DESCRIPTION	• Single shift range only. • Sometimes it shifts correctly.
POSSIBLE CAUSE	• When gear position is fixed in 4GR due to the fail-safe operation, malfunction is in the ATX. • Perform malfunction diagnosis according to No.6 “Low maximum speed and poor acceleration”. — Clutch burned • Line pressure low • Incorrect throttle position signal • Malfunction of VSS • Malfunction of input/turbine speed sensor • Malfunction of sensor ground • Malfunction of shift solenoid A, B or C • Malfunction of control valve body — 4GR is fixed (Operation in fail-safe function) • Short or open circuit in wiring • Poor connection of connector • Poor ground of shift solenoid • Electrical parts of output and input system malfunctioning **Note** • Before following troubleshooting steps, make sure that Automatic Transaxle On-Board Diagnostic and Automatic Transaxle Basic Inspection are conducted.

End Of Sub

NO.8 DOES NOT SHIFT TO FIFTH GEAR (5GR)

AME578001030W12

8	Does not shift to fifth gear (5GR)
DESCRIPTION	• Vehicle does not upshift from 4GR to 5GR even though vehicle speed increased. • Vehicle does not shift to 5GR even though accelerator pedal released in D range at **60 km/h {37 mph}**.
POSSIBLE CAUSE	• Basically, TCC does not operate when fail-safe is operating. Verify DTC at first. If TCC operates when driving at high speeds only, malfunction (improper adjustment) is in the HOLD switch circuit or TR switch circuit. **Note** • If the TCC or piston is stuck, inspect them. In addition, inspect the oil cooler for foreign particles which may have mixed in with the ATF. — TCC piston slipped, burned • Line pressure low • Incorrect throttle position signal • Malfunction of ECT sensor • Malfunction of VSS • Malfunction of input/turbine speed sensor • Malfunction of sensor ground — Malfunction of TFT sensor • Short or open circuit in wiring • Poor connection of connector • Malfunction of sensor — Malfunction of TR switch • Selector lever adjustment incorrect • TR switch adjustment incorrect — Malfunction of TCC solenoid valve • Short or open circuit in wiring • Poor connection of connector • Solenoid valve stuck — Malfunction of HOLD switch — Malfunction of torque converter — Malfunction of control valve body **Note** • Before following troubleshooting steps, make sure that Automatic Transaxle On-Board Diagnostic and Automatic Transaxle Basic Inspection are conducted.

Diagnostic procedure

STEP	INSPECTION		ACTION
1	• Turn ignition switch to ON. • Does HOLD lamp indication correspond to HOLD switch operation?	Yes	Go to next step.
		No	Go to symptom troubleshooting No.26 “HOLD lamp does not illuminate when HOLD switch is turned on”, or No.27 “HOLD lamp illuminates when HOLD switch is not turned on”.
2	• Drive vehicle in D range and inspect following: — 1–2 shift up and down — 2–3 shift up and down — 3–4 shift up and down — 4–5 shift up and down • Are all shift-up and shift-down possible?	Yes	Go to next step.
		No	**No shift at all:** • Go to symptom troubleshooting No.7 “No shifting”. **Abnormal shift:** • Go to symptom troubleshooting No.9 “Abnormal shifting”.
3	• Stop engine. • Inspect shift solenoid A, B, or C circuit. • Are they okay?	Yes	Go to next step.
		No	• Inspect for shift solenoid mechanical stuck. (See K2–84 SOLENOID VALVE INSPECTION.)
4	• Remove torque converter. • Inspect torque converter. (See ATX Workshop.) • Is torque converter okay?	Yes	• Overhaul control valve body and repair or replace any defective parts. (See ATX Workshop Manual.) — If problem remains, replace or overhaul transaxle and repair or replace any defective parts. (See K2–95 AUTOMATIC TRANSAXLE REMOVAL/INSTALLATION.) (See ATX Workshop Manual.)
		No	Replace torque converter.
5	• Verify test results. — If okay, return to diagnostic index to service any additional symptoms. — If malfunction remains, inspect related Service Bulletins and/or On-line Repair Information and perform repair or diagnosis. — If vehicle repaired, troubleshooting completed. — If vehicle not repaired or additional diagnostic information not available, replace TCM.		

End Of Sie

NO.9 ABNORMAL SHIFTING

AME578001030W13

9	Abnormal shifting
DESCRIPTION	• Shift incorrectly (incorrect shift pattern).
POSSIBLE CAUSE	• There is a malfunction in signal circuit which controls shifting (Throttle position signal, input/turbine speed sensor, VSS), control valve is stuck, or clutch circuit is stuck. — Clutch slipped, burned • Line pressure low • Incorrect throttle position signal • Malfunction of VSS • Malfunction of input/turbine speed sensor • Malfunction of sensor ground • Malfunction of shift solenoid A, B, or C • Malfunction of TCC solenoid valve • Malfunction of body ground • Misadjustment of accelerator cable • Malfunction of control valve body • Malfunction or misadjustment of TR switch **Note** • Before following troubleshooting steps, make sure that Automatic Transaxle On-Board Diagnostic and Automatic Transaxle Basic Inspection are conducted.

Diagnostic procedure

STEP	INSPECTION		ACTION
1	• Inspect continuity between TCM connector terminals C and Y and transaxle case. • Is there continuity?	Yes	Go to next step.
		No	Repair or replace ground circuit.
2	• Stop engine. • Inspect shift solenoid A, B, or C circuit. • Are they okay?	Yes	Inspect TCM connector terminal for bend, damage, corrosion or poor contact.
		No	• Inspect connection of shift solenoid A, B, or C terminal on ATX for bend, damage, corrosion or looseness. • Inspect for shift solenoid mechanical stuck. (See K2–84 SOLENOID VALVE INSPECTION.) — If shift solenoids okay, inspect for open or short circuit between TCM connector terminals 2W, 2T, 2X and coupler component terminals I, G, or F.
3	• Verify test results. — If okay, return to diagnostic index to service any additional symptoms. — If malfunction remains, inspect related Service Bulletins and/or On-line Repair Information and perform repair or diagnosis. — If vehicle repaired, troubleshooting completed. — If vehicle not repaired or additional diagnostic information not available, replace TCM.		

End Of Sie

NO.10 FREQUENT SHIFTING

AME578001030W14

10	Frequent shifting
DESCRIPTION	• Downshifting occurs immediately even when accelerator pedal depressed slightly in D, S, L ranges except HOLD mode.
POSSIBLE CAUSE	• The circuit which is the cause is basically the same as for No.9 “Abnormal shifting”. However, a malfunction of input signal to TP sensor, input/turbine speed sensor, VSS (including the sensor ground, sensor harness and connector), or clutch slippage (clutch stuck, low pressure in line) may also be the cause. **Note** • Before following troubleshooting steps, make sure that the Automatic Transaxle On-Board Diagnostic and Automatic Transaxle Basic Inspection are conducted.

End Of Sie

NO.11 SHIFT POINT IS HIGH OR LOW

AME578001030W15

11	Shift point is high or low
DESCRIPTION	• Shift point considerably different from automatic shift diagram. • Shift delays when accelerating. • Shift occurs quickly when accelerating and engine speed does not increase.
POSSIBLE CAUSE	• If the transaxle does not shift abnormally, there is a malfunction of input signal to TP sensor, input/turbine speed sensor, or VSS. • If engine speed is high or low regardless that shifting is normal, inspect tachometer. • Verify that output signal of TP sensor changes linearly. **Note** • Before following troubleshooting steps, make sure that Automatic Transaxle On-Board Diagnostic and Automatic Transaxle Basic Inspection are conducted.

End Of Sie

NO.12 TORQUE CONVERTER CLUTCH (TCC) NON-OPERATION

AME578001030W16

12	Torque converter clutch (TCC) non-operation
DESCRIPTION	• TCC does not operate when vehicle reaches TCC operation range.
POSSIBLE CAUSE	• Basically, TCC does not operate when fail-safe is operating. Verify DTC at first. If TCC operates when driving at high speeds only, the malfunction (improper adjustment) is in HOLD switch circuit or TR switch circuit. **Note** • If the TCC or piston is stuck, inspect them. In addition, inspect the oil cooler for foreign particles which may have mixed in with the ATF. • TCC piston slipped, burned — Line pressure low • Incorrect throttle position signal • Input/turbine speed sensor malfunction • TFT sensor malfunction • Sensor ground malfunction • VSS malfunction • Malfunction of output solenoid valve system (Sticking) • TCC solenoid valve malfunction • Malfunction of control valve body system (Poor operation, sticking) • TCC piston hydraulic pressure system malfunction • Malfunction of TP sensor (Not operating linearly) • Malfunction of input/turbine speed sensor or VSS **Note** • Before following troubleshooting steps, make sure that Automatic Transaxle On-Board Diagnostic and Automatic Transaxle Basic Inspection are conducted.

Diagnostic procedure

STEP	INSPECTION		ACTION
1	• Turn ignition switch to ON. • Does HOLD lamp indication correspond to HOLD switch operation?	Yes	Go to next step.
		No	Go to symptom troubleshooting No.26 “HOLD lamp does not illuminate when HOLD switch is turned on”, or No.27 “HOLD lamp illuminates when HOLD switch is not turned on”.
2	• Disconnect TCM. • Is resistance between ground terminals 1C, 1Y at TCM connector and body ground less than **5.0 ohm**?	Yes	Go to next step.
		No	Repair open ground circuit.
3	• Remove torque converter. • Inspect torque converter. (See ATX Workshop Manual.) • Is torque converter okay?	Yes	• Overhaul control valve body and repair or replace any defective parts. (See ATX Workshop Manual.) • If problem remains, replace or overhaul transaxle and repair or replace any defective parts. (See ATX Workshop Manual.)
		No	• Replace torque converter.
4	• Verify test results. — If okay, return to diagnostic index to service any additional symptoms. — If malfunction remains, inspect related Service Bulletins and/or On-line Repair Information and perform repair or diagnosis. — If vehicle repaired, troubleshooting completed. — If vehicle not repaired or additional diagnostic information not available, replace TCM.		

End Of Sie

NO.13 NO KICKDOWN

AME578001030W17

13	No kickdown
DESCRIPTION	• Does not downshift when accelerator pedal fully depressed within kickdown range.
POSSIBLE CAUSE	• If transaxle does not downshift though shifting is normal, malfunction is in TP sensor circuit (including sensor ground, sensor harness and connector). **Note** • Before following troubleshooting steps, make sure that Automatic Transaxle On-Board Diagnostic and Automatic Transaxle Basic Inspection are conducted.

End Of Sie

NO.14 ENGINE FLARES UP OR SLIPS WHEN UPSHIFTING OR DOWNSHIFTING

AME578001030W18

14	Engine flares up or slips when upshifting or downshifting
DESCRIPTION	• When accelerator pedal depressed for driveway, engine speed increases but vehicle speed increase slowly. • When accelerator pedal depressed while driving, engine speed increases but vehicle does not.
POSSIBLE CAUSE	• There is clutch slip because clutch is stuck or line pressure is low. — Clutch stuck, slippage • Line pressure low • Incorrect throttle position signal • Malfunction of VSS • Malfunction of input/turbine speed sensor • Malfunction of sensor ground • Malfunction of shift solenoid A, B, or C • Malfunction of TCC solenoid valve • Malfunction of body ground • Misadjustment of throttle cable • Malfunction of control valve body — Poor operation of mechanical pressure • Selector lever position disparity • TR switch position disparity **Note** • Before following troubleshooting steps, make sure that Automatic Transaxle On-Board Diagnostic and Automatic Transaxle Basic Inspection are conducted.

Diagnostic procedure

STEP	INSPECTION		ACTION
1	• Is line pressure okay? (See K2–67 Line Pressure Test.)	Yes	Go to next step.
		No	Repair or replace any defective parts according to inspection results.
2	• Is shift point okay? (See K2–70 ROAD TEST.)	Yes	Go to next step.
		No	Go to symptom troubleshooting No.9 “Abnormal shifting”.
3	• Stop engine. • Inspect shift solenoid A, B, or C circuit. • Are they okay?	Yes	• Overhaul control valve body and repair or replace any defective parts. (See ATX Workshop Manual.) • If problem remains, replace or overhaul transaxle and repair or replace any defective parts. (See ATX Workshop Manual.)
		No	• Inspect for shift solenoid mechanical stuck. (See K2–84 SOLENOID VALVE INSPECTION.)
4	• Verify test results. — If okay, return to diagnostic index to service any additional symptoms. — If malfunction remains, inspect related Service Bulletins and/or On-line Repair Information and perform repair or diagnosis. — If vehicle repaired, troubleshooting completed. — If vehicle not repaired or additional diagnostic information not available, replace TCM.		

End Of Ste

NO.15 ENGINE FLARES UP OR SLIPS WHEN ACCELERATING VEHICLE

AME578001030W19

15	Engine flares up or slips when accelerating vehicle
DESCRIPTION	• Engine flares up when accelerator pedal depressed for upshifting. • Engine flares up suddenly when accelerator pedal depressed for downshifting.
POSSIBLE CAUSE	• Malfunction is basically the same as for No.14 “Engine flares up or slips when upshifting or downshifting”. — If conditions for No.14 worsen, malfunction will develop into No.15. **Note** • Before following troubleshooting steps, make sure that Automatic Transaxle On-Board Diagnostic and Automatic Transaxle Basic Inspection are conducted.

End Of Ste

NO.16 JUDDER UPON TORQUE CONVERTER CLUTCH (TCC) OPERATION

AME578001030W20

16	Judder upon torque converter clutch (TCC) operation
DESCRIPTION	• Vehicle jolts when TCC engaged.
POSSIBLE CAUSE	• Poor TCC engagement due to either slippage because TCC piston is stuck or line pressure is low. **Caution** • **If the TCC or piston are stuck, inspect them. In addition, inspect the oil cooler for foreign particles which may have mixed in with the ATF.** — Torque converter clutch piston slipped, burned • Line pressure low • Incorrect throttle position signal • Malfunction of VSS • Malfunction of input/turbine speed sensor • Malfunction of sensor ground • Malfunction of TCC solenoid valve • Malfunction of control valve body — Malfunction of torque converter **Note** • Before following troubleshooting steps, make sure that Automatic Transaxle On-Board Diagnostic and Automatic Transaxle Basic Inspection are conducted.

End Of Se

NO.17 EXCESSIVE SHIFT SHOCK FROM N TO D OR N TO R POSITION/RANGE

AME578001030W21

17	Excessive shift shock from N to D or N to R position/range
DESCRIPTION	• Strong shock felt when shifting from N to D or N to R position/range at idle.
POSSIBLE CAUSE	• Shift shock may worsen when fail-safe is operating. If no DTC is output, shift shock may worsen due to poor operation of control valve body or sticking of clutch. — Clutch burned (N→D: Low clutch, N→R: Reverse clutch or low and reverse brake) • Line pressure low • Incorrect throttle position signal • Malfunction of TFT sensor • Malfunction of sensor ground • Misadjustment of throttle cable • Malfunction of control valve body — Poor hydraulic operation (Malfunction in range change) — Idle speed high — Poor tightening torque of engine mount, exhaust mount — Line pressure high **Note** • Before following troubleshooting steps, make sure that Automatic Transaxle On-Board Diagnostic and Automatic Transaxle Basic Inspection are conducted.

Diagnostic procedure

STEP	INSPECTION		ACTION
1	• Does shift shock occur only when engine cold?	Yes	Go to next step.
		No	Go to Step 3.
2	• Inspect TFT sensor and related harness: vibration, intermittent open/short circuit. • Is it okay?	Yes	Go to next step.
		No	Repair or replace part if necessary.
3	• Is line pressure okay? (See K2–67 Line Pressure Test.)	Yes	Go to next step.
		No	Repair or replace any defective parts according to inspection results.
4	• Is stall speed okay? (See K2–69 Stall Speed Test.)	Yes	Go to next step.
		No	Go to Step 6.
5	• Inspect TR switch and related harness: vibration, intermittent open/short circuit. • Is it okay?	Yes	• Go to next step.
		No	Repair or replace part if necessary.

STEP	INSPECTION		ACTION
6	• Stop engine and turn ignition switch on. • Inspect pressure control solenoid circuit. • Is it okay?	Yes	• Overhaul control valve body and repair or replace any defective parts. (See ATX Workshop Manual.) • If problem remains, replace or overhaul transaxle and repair or replace any defective parts. (See ATX Workshop Manual.)
		No	• Inspect for pressure control solenoid mechanical stuck. (See K2–84 SOLENOID VALVE INSPECTION.)
7	• Verify test results. — If okay, return to diagnostic index to service any additional symptoms. — If malfunction remains, inspect related Service Bulletins and/or On-line Repair Information and perform repair or diagnosis. — If vehicle repaired, troubleshooting completed. — If vehicle not repaired or additional diagnostic information not available, replace TCM.		

End Of Sie

NO.18 EXCESSIVE SHIFT SHOCK IS GIVEN WHEN UPSHIFTING AND DOWNSHIFTING

AME578001030W22

18	Excessive shift shock is given when upshifting and downshifting
DESCRIPTION	• Excessive shift shock felt when depressing accelerator pedal to accelerate at upshifting. • During cruising, excessive shift shock felt when depressing accelerator pedal at downshifting.
POSSIBLE CAUSE	• Shift shock may worsen when fail-safe is operating. The shift shock has worsen if TP sensor, input/turbine speed sensor, or VSS signal malfunctions. — Clutch slipped, burned • Line pressure low, high • Incorrect throttle position signal • Malfunction of VSS • Malfunction of input/turbine speed sensor • Malfunction of TFT sensor • Malfunction of shift solenoid A, B, or C • Malfunction of TCC solenoid valve • Misadjustment of throttle cable • Malfunction of body ground and sensor ground • Malfunction of control valve body — Poor hydraulic operation (Malfunction in range change) **Note** • Before following troubleshooting steps, make sure that Automatic Transaxle On-Board Diagnostic and Automatic Transaxle Basic Inspection are conducted.

End Of Sie

NO.19 EXCESSIVE SHIFT SHOCK ON TORQUE CONVERTER CLUTCH (TCC)

AME578001030W23

19	Excessive shift shock on torque converter clutch (TCC)
DESCRIPTION	• Strong shock felt when TCC engaged.
POSSIBLE CAUSE	• The troubleshooting flow is the same as No.16 “Judder upon torque converter clutch (TCC) operation”. **Note** • Before following troubleshooting steps, make sure that Automatic Transaxle On-Board Diagnostic and Automatic Transaxle Basic Inspection are conducted.

End Of Sie

NO.20 NOISE OCCURS AT IDLE WHEN VEHICLE IS STOPPED IN ALL POSITIONS/RANGES

AME578001030W24

20	Noise occurs at idle when vehicle is stopped in all positions/ranges
DESCRIPTION	• Transaxle noisy in all positions and ranges when vehicle idling.
POSSIBLE CAUSE	• Malfunction is in pressure solenoid or oil pump which causes a high-pitched noise to be emitted from transaxle at idle. **Note** • If a noise is emitted during shifting only, malfunction is in shift solenoid A, B, or C. • If a noise is emitted during shifting at certain gears only or during deceleration only, it is gear noise. • Before following troubleshooting steps, make sure that Automatic Transaxle On-Board Diagnostic and Automatic Transaxle Basic Inspection are conducted.

Diagnostic procedure

STEP	INSPECTION		ACTION
1	• Inspect engine condition. • Is any engine concern (e.g. Rough idle)?	Yes	Go to appropriate symptom troubleshooting. (See F4–250 SYMPTOM DIAGNOSTIC INDEX.)
		No	Replace basic inspection and repair or replace any defective parts according to inspection result
2	• Verify test results. — If okay, return to diagnostic index to service any additional symptoms. — If malfunction remains, inspect related Service Bulletins and/or On-line Repair Information and perform repair or diagnosis. — If vehicle repaired, troubleshooting completed. — If vehicle not repaired or additional diagnostic information not available, replace TCM.		

End Of Sie

NO.21 NOISE OCCURS AT IDLE WHEN VEHICLE IS STOPPED IN D, S, L RANGES, OR IN R POSITION

AME578001030W25

21	Noise occurs at idle when vehicle is stopped in D, S, L ranges, or in R position
DESCRIPTION	• Transaxle noisy in driving ranges when vehicle idling.
POSSIBLE CAUSE	• Although the malfunction is basically the same as No.20 “Noise occurs at idle when vehicle is stopped in all positions/ranges”, other causes may be selector lever position disparity or TR switch position disparity. **Note** • Before following troubleshooting steps, make sure that Automatic Transaxle On-Board Diagnostic and Automatic Transaxle Basic Inspection are conducted.

End Of Sie

NO.22 NO ENGINE BRAKING IN L RANGE

AME578001030W26

22	No engine braking in L range
DESCRIPTION	• Engine speed drops to idle but vehicle coasts when accelerator pedal released during cruising at medium to high speeds. • Engine speed drops to idle but vehicle coasts when accelerator pedal released when in L range at low vehicle speed.
POSSIBLE CAUSE	• Clutch slipped, burned (Reduction brake) — Line pressure low • Malfunction of VSS • Malfunction of input/turbine speed sensor • Malfunction of sensor ground • Malfunction of control valve body — HOLD switch on not judged by TCM (short, or open circuit, poor operation) • Malfunction of HOLD switch signal **Note** • Before following troubleshooting steps, make sure that Automatic Transaxle On-Board Diagnostic and Automatic Transaxle Basic Inspection are conducted.

Diagnostic procedure

STEP	INSPECTION		ACTION
1	• Inspect TR switch adjustment. • Does TR switch adjusted properly? • Select PNP PID. • Is PNP PID reading okay when selecting range?	Yes	Go to next step.
		No	Adjust TR switch as necessary. (See K2–79 TRANSAXLE RANGE (TR) SWITCH ADJUSTMENT.) Inspect TR switch. Repair or replace any defective parts.
2	• Do following symptoms concurrently occur? — Engine flares up or slips during acceleration — Engine flares up or slips when shifting	Yes	Go to symptom troubleshooting No.14 “Engine flares up or slips when upshifting or downshifting” or No.15 “Engine flares up or slips when accelerating vehicle”.
		No	Go to next step.
3	• Verify test results. — If okay, return to diagnostic index to service any additional symptoms. — If malfunction remains, inspect related Service Bulletins and/or On-line Repair Information and perform repair or diagnosis. — If vehicle repaired, troubleshooting completed. — If vehicle not repaired or additional diagnostic information not available, replace TCM.		

End Of Sie

NO.23 TRANSAXLE OVERHEATS

AME578001030W27

23	TRANSAXLE OVERHEATS
DESCRIPTION	• Burnt smell emitted from transaxle. • Smoke emitted from transaxle.
POSSIBLE CAUSE	• Malfunction is restricted to hindrance of coolant at oil cooler. In addition, overheating of transaxle may be caused by a malfunction of TFT sensor. — Line pressure low • ATF level low • Incorrect throttle position signal • Misadjustment of throttle cable — Oil cooler malfunction (Foreign material mixed in with ATF) — TFT sensor malfunction — Excessive amount of ATF **Note** • Before following troubleshooting steps, make sure that Automatic Transaxle On-Board Diagnostic and Automatic Transaxle Basic Inspection are conducted.

Diagnostic procedure

STEP	INSPECTION		ACTION
1	• Is line pressure okay? (See K2–67 Line Pressure Test.)	Yes	Go to next step.
		No	Repair or replace any defective parts according to inspection results.
2	• Is stall speed okay? (See K2–69 Stall Speed Test.)	Yes	Go to next step.
		No	Repair or replace any defective parts according to inspection results.
3	• Inspect TFT sensor and related harness: vibration, intermittent open/short circuit • Is it okay?	Yes	Go to next step.
		No	Repair or replace part if necessary.
4	• Inspect pressure control solenoid circuit. • Is it okay?	Yes	Go to next step.
		No	• Inspect for pressure control solenoid mechanical stuck. (See K2–84 SOLENOID VALVE INSPECTION.)
5	• Inspect for bend, damage, corrosion or kinks of oil cooler pipes. • Are oil cooler pipes okay?	Yes	• Overhaul control valve body and repair or replace any defective parts. (See ATX Workshop Manual.) • If problem remains, replace or overhaul transaxle and repair or replace any defective parts. (See ATX Workshop Manual.)
		No	Replace any defective parts.
6	• Verify test results. — If okay, return to diagnostic index to service any additional symptoms. — If malfunction remains, inspect related Service Bulletins and/or On-line Repair Information and perform repair or diagnosis. — If vehicle repaired, troubleshooting completed. — If vehicle not repaired or additional diagnostic information not available, replace TCM.		

End Of Sie

NO.24 ENGINE STALLS WHEN SHIFTED TO D, S, L RANGES, OR IN R POSITION

AME578001030W28

24	Engine stalls when shifted to D, S, L ranges, or in R position
DESCRIPTION	• Engine stalls when shifting from N or P position to D, S, L ranges or R position at idle.
POSSIBLE CAUSE	• Malfunction is on the engine control side (e.g. IAC system). Otherwise, malfunction is in input/turbine speed sensor (engine sometimes starts) or TCC piston circuit (engine always stalls). • Before following troubleshooting steps, make sure that Automatic Transaxle On-Board Diagnostic and Automatic Transaxle Basic Inspection are conducted.

Diagnostic procedure

STEP	INSPECTION		ACTION
1	• Go to symptom troubleshooting No.4 “Engine stalls-after start/at idle”. (See F4–260 NO.5 ENGINE STALLS-AFTER START/AT IDLE.) • Is engine control system okay?	Yes	Go to next step.
		No	Repair or replace any defective parts according to inspection results.

STEP	INSPECTION		ACTION
2	• Remove torque converter. • Inspect torque converter. (See ATX Workshop Manual.) • Is torque converter okay?	Yes	• Inspect for bend, damage or kinks of oil cooler line pipes. If okay, overhaul control valve body and repair or replace any defective parts. (See ATX Workshop Manual.) • If problem remains, replace or overhaul transaxle and repair or replace any defective parts. (See ATX Workshop Manual.)
		No	Replace torque converter.
3	• Verify test results. — If okay, return to diagnostic index to service any additional symptoms. — If malfunction remains, inspect related Service Bulletins and/or On-line Repair Information and perform repair or diagnosis. — If vehicle repaired, troubleshooting completed. — If vehicle not repaired or additional diagnostic information not available, replace TCM.		

End Of Sie

NO.25 ENGINE STALLS WHEN DRIVING AT SLOW SPEED OR STOPPING

AME578001030W29

25	Engine stalls when driving at slow speeds or stopping
DESCRIPTION	• Engine stalls when brake pedal depressed while driving at low speed or stopping.
POSSIBLE CAUSE	• Malfunction is on engine control side (e.g. Fuel injection control, IAC system) **Note** • Before following troubleshooting steps, make sure that Automatic Transaxle On-Board Diagnostic and Automatic Transaxle Basic Inspection are conducted.

Diagnostic procedure

STEP	INSPECTION		ACTION
1	• Go to symptom troubleshooting No.10 “Low idle/stalls during deceleration”. (See F4–271 NO.10 LOW IDLE/STALLS DURING DECELERATION.) • Is engine control system okay?	Yes	Go to symptom troubleshooting No.24 “Engine stalls when shifted to D, S, L ranges, or in R position”.
		No	Repair or replace any defective parts according to inspection results.
2	• Verify test results. — If okay, return to diagnostic index to service any additional symptoms. — If malfunction remains, inspect related Service Bulletins and/or On-line Repair Information and perform repair or diagnosis. — If vehicle repaired, troubleshooting completed. — If vehicle not repaired or additional diagnostic information not available, replace TCM.		

End Of Sie

NO.26 HOLD LAMP DOES NOT ILLUMINATES WHEN HOLD SWITCH IS TURNED ON

AME578001030W30

26	HOLD lamp does not illuminate when HOLD switch is turned ON
DESCRIPTION	• HOLD lamp on instrument cluster does not illuminate when HOLD switch is turned on and ignition switch at ON.
POSSIBLE CAUSE	• HOLD switch or related wiring harness malfunction. **Note** • Before following troubleshooting steps, make sure that Automatic Transaxle On-Board Diagnostic and Automatic Transaxle Basic Inspection are conducted.

Diagnostic procedure

STEP	INSPECTION		ACTION
1	• Are other indicator lights illuminated with ignition switch on?	Yes	Go to next step.
		No	Inspect meter fuse.
2	• Inspect TCS PID value using WDS or equivalent. • Is TCS PID value okay?	Yes	Go to next step.
		No	• Inspect HOLD switch. (See K2–75 HOLD SWITCH INSPECTION.) • If HOLD switch okay, inspect for continuity between HOLD switch and TCM terminal 2I.

STEP	INSPECTION		ACTION
3	• Remove HOLD lamp. • Is HOLD lamp bulb burned out?	Yes	Replace HOLD lamp.
		No	Inspect for open circuit or disconnected connector in following harness. • Ignition switch and HOLD lamp • HOLD lamp and TCM terminal E including instrument cluster circuit board
4	• Verify test results. — If okay, return to diagnostic index to service any additional symptoms. — If malfunction remains, inspect related Service Bulletins and/or On-line Repair Information and perform repair or diagnosis. — If vehicle repaired, troubleshooting completed. — If vehicle not repaired or additional diagnostic information not available, replace TCM.		

End Of Sie

NO.27 HOLD LAMP ILLUMINATES WHEN HOLD SWITCH IS NOT TURNED ON

AME578001030W31

27	HOLD lamp illuminates when HOLD switch is not turned ON
DESCRIPTION	• HOLD lamp in dashboard illuminates even though HOLD switch turned off and ignition switch at ON.
POSSIBLE CAUSE	• HOLD switch or related wiring harness malfunction. **Note** • Before following troubleshooting steps, make sure that Automatic Transaxle On-Board Diagnostic and Automatic Transaxle Basic Inspection are conducted.

Diagnostic procedure

STEP	INSPECTION		ACTION
1	• Inspect TCS PID value using WDS or equivalent. • Is TCS PID value okay?	Yes	Inspect for short to GND circuit in following harness. • HOLD lamp on instrument cluster and TCM connector terminal E including instrument cluster circuit board
		No	• Inspect HOLD switch. (See K2–75 HOLD SWITCH INSPECTION.) • If HOLD switch okay, inspect for short to ground circuit between HOLD switch terminal and TCM terminal 2I.
2	• Verify test results. — If okay, return to diagnostic index to service any additional symptoms. — If malfunction remains, inspect related Service Bulletins and/or On-line Repair Information and perform repair or diagnosis. — If vehicle repaired, troubleshooting completed. — If vehicle not repaired or additional diagnostic information not available, replace TCM.		

End Of Sie

FRONT AND REAR AXLES

FEATURES

OUTLINE M-2
OUTLINE OF CONSTRUCTION M-2
FEATURES M-2
SPECIFICATIONS M-2
DRIVE SHAFT M-2
DRIVE SHAFT OUTLINE M-2
DRIVE SHAFT (AJ)
CROSS-SECTIONAL VIEW M-2

SERVICE

OUTLINE M-3
SUPPLEMENTAL SERVICE INFORMATION M-3
DRIVE SHAFT M-4
JOINT SHAFT (L3)
REMOVAL/INSTALLATION M-4
JOINT SHAFT (AJ)
REMOVAL/INSTALLATION M-7
JOINT SHAFT (MZR-CD (RF TURBO))
REMOVAL/INSTALLATION M-9
JOINT SHAFT (L3)
DISASSEMBLY/ASSEMBLY M-10
JOINT SHAFT (AJ) DISASSEMBLY M-12
JOINT SHAFT (AJ) ASSEMBLY M-13
JOINT SHAFT (MZR-CD (RF TURBO))
DISASSEMBLY/ASSEMBLY M-15
DRIVE SHAFT (L3)
REMOVAL/INSTALLATION M-18
DRIVE SHAFT (AJ)
REMOVAL/INSTALLATION M-20
DRIVE SHAFT (MZR-CD (RF TURBO))
REMOVAL/INSTALLATION M-24
DRIVE SHAFT (TRIPOD JOINT TYPE)
DISASSEMBLY/ASSEMBLY M-27
DRIVE SHAFT
(DOUBLE OFFSET JOINT TYPE)
DISASSEMBLY/ASSEMBLY M-32

OUTLINE

OUTLINE OF CONSTRUCTION

AME630201018W01

- The construction and operation of front and rear axles is essentially carried over from that of the previous MPV (LW), except for the following features. (See MPV Training Manual 3340-1*-99F.) (See MPV Workshop Manual 1666-1*-99F.)

End Of Sie

FEATURES

AME630201018W02

- New joint shafts have been added due to the adoption of the L3, AJ and MZR-CD (RF Turbo) engines.
- New drive shafts have been added due to the adoption of the L3, AJ and MZR-CD (RF Turbo) engines.

End Of Sie

SPECIFICATIONS

AME630201018W03

Item			New MPV (LW)			Previous MPV (LW)		
			L3	**AJ**	**MZR-CD (RF Turbo)**	**FS**		**GY**
			MTX	**ATX**	**MTX**	**MTX**	**ATX**	**ATX**
Front axle	Bearing type		Angular ball bearing			Angular ball bearing		
Rear axle	Bearing type		Angular ball bearing			Angular ball bearing		
Drive shaft	Joint type	Wheel side	Bell joint			Bell joint		
		Differential side	Double offset joint	Tripod joint (With free ring)	Double offset joint	Double offset joint	Tripod joint	
	Shaft diameter (mm {in})		30.0 {1.18}			24.0 {0.94}		
Joint shaft	Shaft diameter (mm {in})		29.0 {1.14}	38.0 {1.50}	41.0 {1.61}	26.0 {1.02}		

Bold frames: New specifications

End Of Sie

DRIVE SHAFT

DRIVE SHAFT OUTLINE

AME631625500W01

- The construction of the joint is essentially carried over from that of the previous tripod joint.
- A free ring has been adopted for the transaxle side joint. A contact region between the outer ring and free ring has been formed to reduce axial vibratory force when the joint slides (AJ).

End Of Sie

DRIVE SHAFT (AJ) CROSS-SECTIONAL VIEW

AME631625500W02

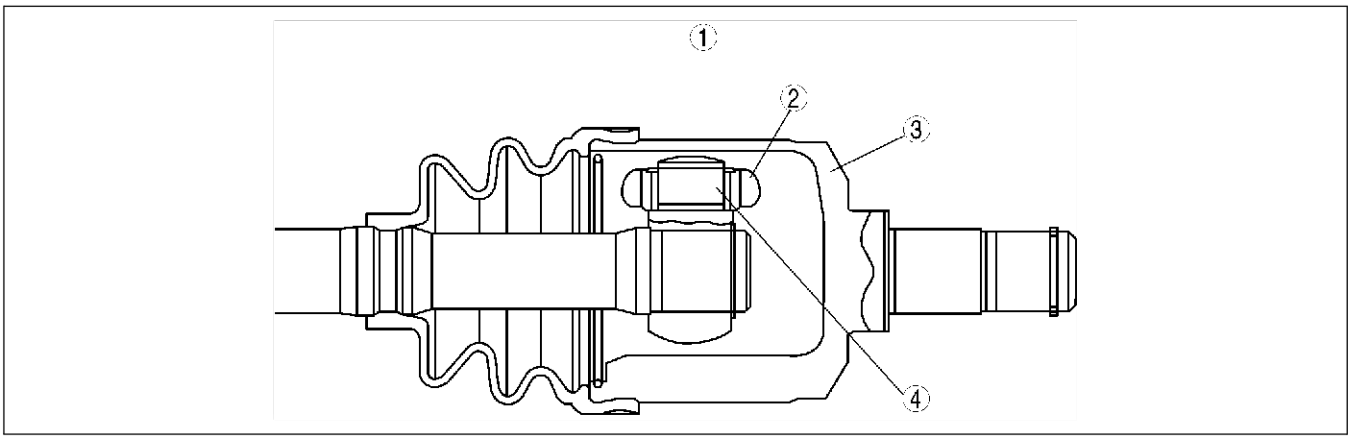

A6E6316T001

1	Transaxle side joint	3	Outer ring
2	Free ring	4	Tripod joint

End Of Sie

OUTLINE

SUPPLEMENTAL SERVICE INFORMATION

AME630201018W04

- The following additions have been made since publication of the MPV Workshop Manual (1666-1*-99F).

Joint shaft (L3)
- Removal/installation procedure has been added.
- Disassembly/assembly procedure has been added.

Joint shaft (AJ)
- Removal/installation procedure has been added.
- Disassembly procedure has been added.
- Assembly procedures has been added.

Joint shaft (MZR-CD (RF Turbo))
- Removal/installation procedure has been added.
- Disassembly/assembly procedure has been added.

Drive shaft (L3)
- Removal/installaiton procedure has been added.
- Disassembly/assembly procedure has been added.

Drive shaft (AJ)
- Removal/installation procedure has been added.
- Disassembly/assembly procedure has been added.

Drive shaft (MZR-CD (RF Turbo))
- Removal/installation procedure has been added.
- Disassembly/assembly procedure has been added.

End Of Ste

M

DRIVE SHAFT

JOINT SHAFT (L3) REMOVAL/INSTALLATION

AME631625700W01

Caution

- **Performing the following procedures without first removing the ABS wheel-speed sensor could cause an open circuit in the harness if it is pulled by mistake. Before performing the following procedures, remove the ABS wheel-speed sensor (axle side) and fix it to an appropriate place where the sensor will not be pulled by mistake while servicing the vehicle.**

1. Drain the transaxle oil.
2. Remove in the order indicated in the table.
3. Install in the reverse order of removal.

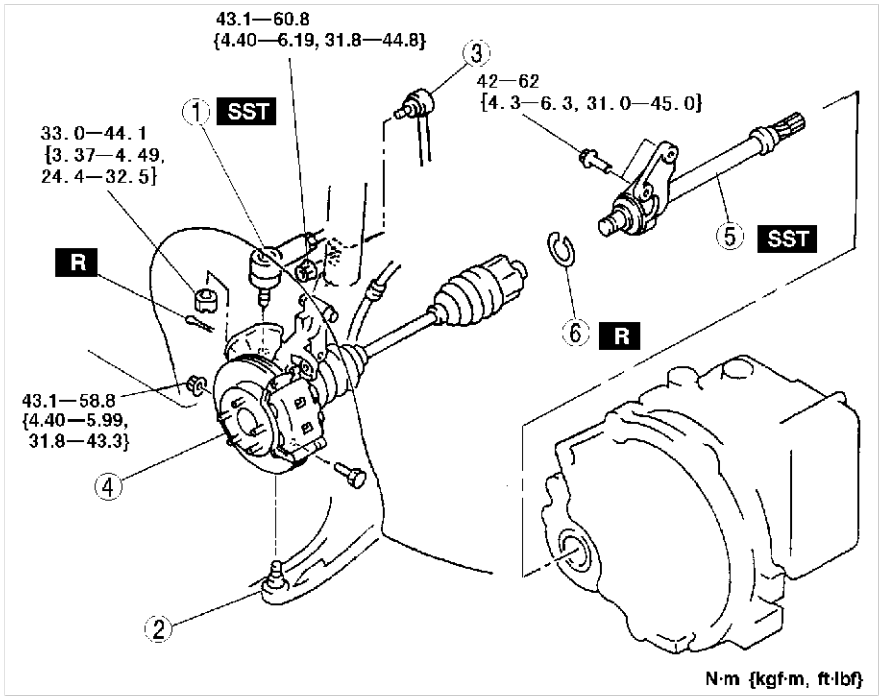

AME6316W001

1	Tie-rod end (See M–5 Tie-rod End Ball Joint Removal Note)
2	Lower arm ball joint (See M–5 Lower Arm Ball Joint Removal Note)
3	Stabilizer control link

4	Drive shaft and axle assembly (See M–5 Drive Shaft and Axle Assmebly Removal Note)
5	Joint shaft (See M–5 Joint Shaft Removal Note) (See M–6 Joint Shaft Installation Note)
6	Clip (See M–6 Clip Installation Note)

Tie-rod End Ball Joint Removal Note

1. Separate the ball joint from the knuckle using the **SST**.

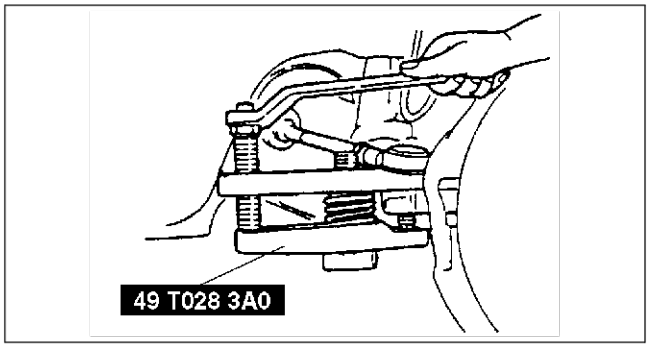

AMJ6613W106

Lower Arm Ball Joint Removal Note

1. Remove the clinch bolt and nut.
2. Wrap a rag around the ball joint dust boot.
3. Pry the lower arm out of the knuckle.

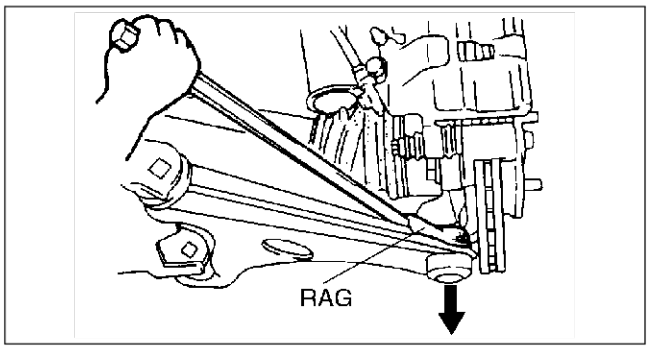

AMU0313W007

Drive Shaft and Axle Assmebly Removal Note

1. Disengage the right side drive shaft from the joint shaft by tapping on the differential side outer ring using a bar.

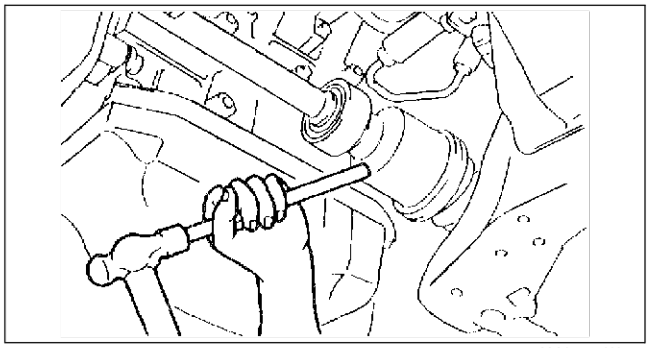

AMJ6316W005

Joint Shaft Removal Note

1. Separate the joint shaft bracket from the cylinder block, then remove the joint shaft.

Caution

- **The sharp edges of the joint shaft can slice or puncture the oil seal. Be careful when installing the joint shaft to the transaxle.**

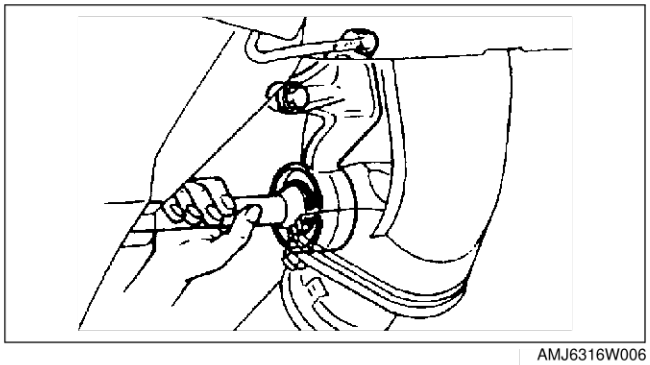

AMJ6316W006

M

2. Insert the **SST** into the transaxle to hold the side gears after the joint shaft is removed.

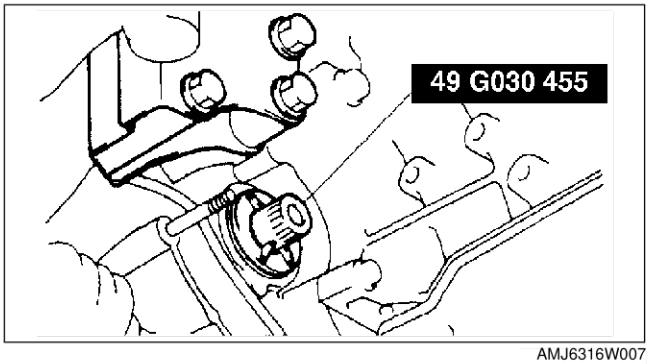

AMJ6316W007

Clip Installation Note

1. Install a new clip on the joint shaft with the opening facing upward. Ensure that the diameter of the clip does not exceed the specification on installation.
2. After installation, measure the outer diameter. If it exceeds the specification, repeat steps 1—2 using a new clip.

Outer diameter specification
30.5—31.2 mm {1.21—1.22 in}

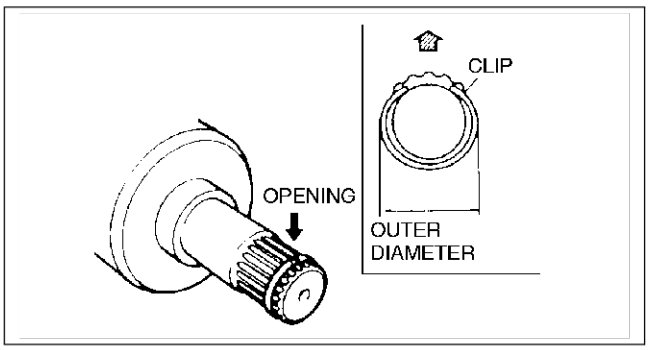

X3U313WA6

Joint Shaft Installation Note

1. Install the joint shaft to the transaxle.

Caution
- **The sharp edges of the joint shaft can slice or puncture the oil seal. Be careful when installing the joint shaft to the transaxle.**

End Of Sta

JOINT SHAFT (AJ) REMOVAL/INSTALLATION

AME631625700W02

Caution

- **Performing the following procedures without first removing the ABS wheel-speed sensor could cause an open circuit in the harness if it is pulled by mistake. Before performing the following procedures, remove the ABS wheel-speed sensor (axle side) and fix it to an appropriate place where the sensor will not be pulled by mistake while servicing the vehicle.**
- **Removing the drive shaft with the joint shaft bracket installed may cause the deformation of the joint shaft bracket. Therefore remove or install the drive shaft and joint shaft as a component.**

1. Drain the transaxle oil.
2. Remove in the order indicated in the table.
3. Install in the reverse order of removal.

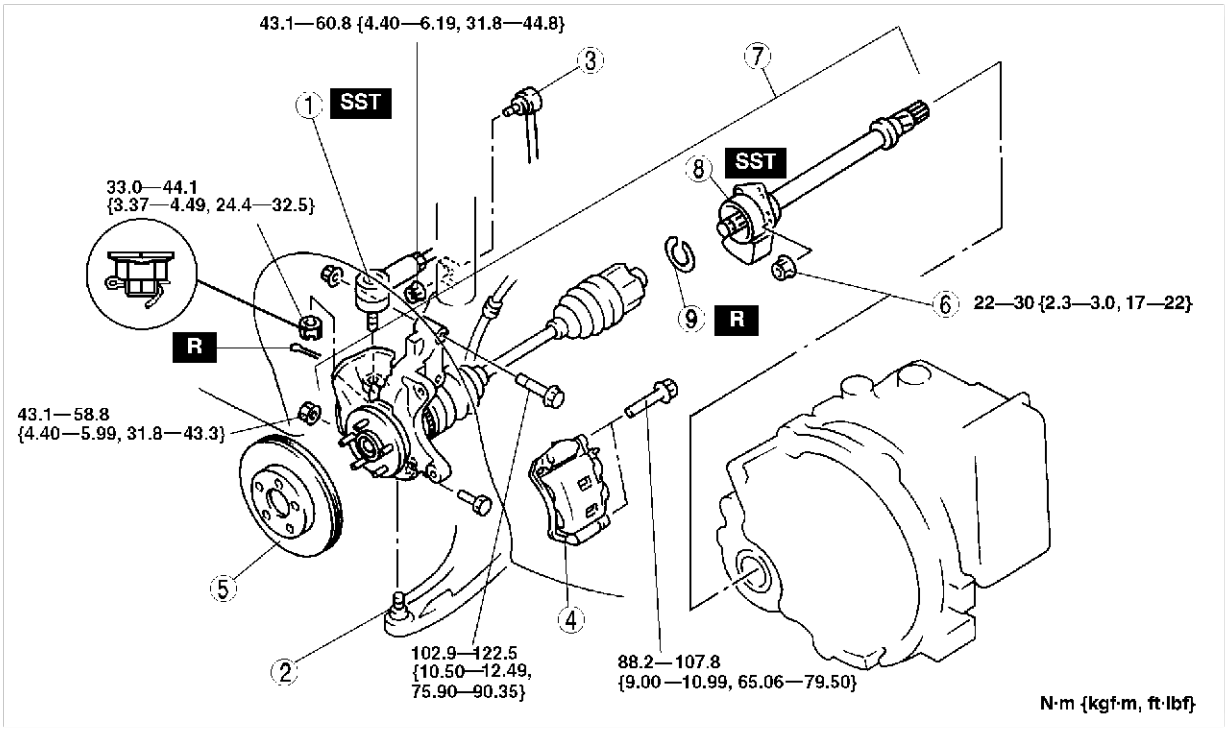

AME6316W002

1	Tie-rod end (See M–5 Tie-rod End Ball Joint Removal Note)
2	Lower arm ball joint (See M–5 Lower Arm Ball Joint Removal Note)
3	Stabilizer control link
4	Brake caliper component
5	Disc plate
6	Joint shaft bracket nut

7	Wheel hub, steering knuckle, drive shaft and joint shaft (See M–7 Wheel Hub, Steering Knuckle, Drive Shaft and Joint Shaft Removal Note) (See M–8 Wheel Hub, Steering Knuckle, Drive Shaft and Joint Shaft Installation Note)
8	Joint shaft (See M–8 Joint Shaft Removal Note) (See M–8 Joint Shaft Installation Note)
9	Clip (See M–8 Clip Installation Note)

Wheel Hub, Steering Knuckle, Drive Shaft and Joint Shaft Removal Note

1. Pull the joint shaft straight out.

Caution

- **The sharp edges of the joint shaft can slice or puncture the oil seal. Be careful when removing the joint shaft from the transaxle.**

Joint Shaft Removal Note

1. Secure the shaft portion of the joint shaft in a vise.
2. As shown in the figure, insert a pry bar between the drive shaft and the joint shaft and tap on the bar to uncouple them.

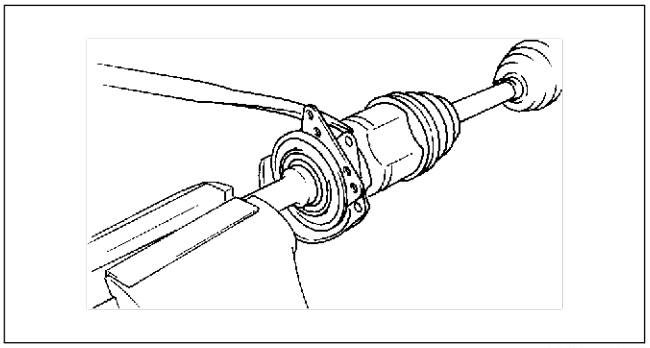

YMU313WAF

Clip Installation Note

1. Install a new clip on the joint shaft with the opening facing upward. Ensure that the diameter of the clip does not exceed the specification on installation.
2. After installation, measure the outer diameter. If it exceeds the specification, repate steps 1—2 using a new clip.

Outer diameter specification
30.5—31.2 mm {1.21—1.22 in}

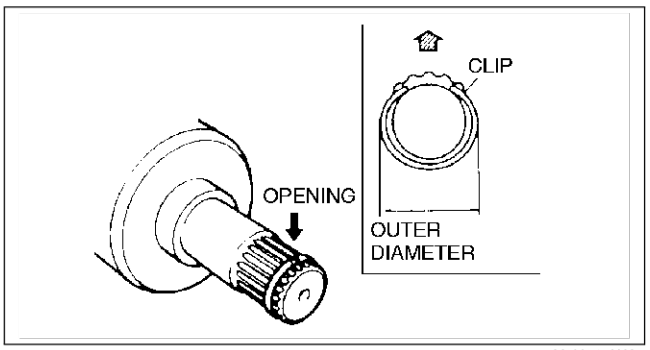

X3U313WA6

Joint Shaft Installation Note

1. Secure the shaft portion of the drive shaft in a vise.
2. Install the joint shaft using a plastic hammer as shown.

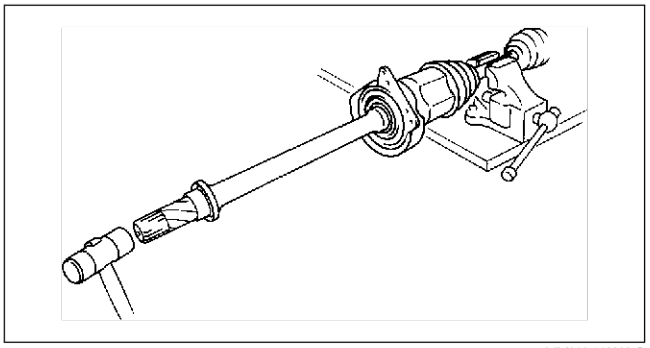

YMU313WAG

Wheel Hub, Steering Knuckle, Drive Shaft and Joint Shaft Installation Note

1. Apply ATF to the oil seal lip.
2. Push the drive shaft and joint shaft into the transaxle.

Caution

- **The sharp edges of the joint shaft can slice or puncture the oil seal. Be careful when installing the joint shaft to the transaxle.**

End Of Sie

JOINT SHAFT (MZR-CD (RF TURBO)) REMOVAL/INSTALLATION

AME631625700W03

Caution

- **Performing the following procedures without first removing the ABS wheel-speed sensor could cause an open circuit in the harness if it is pulled by mistake. Before performing the following procedures, remove the ABS wheel-speed sensor (axle side) and fix it to an appropriate place where the sensor will not be pulled by mistake while servicing the vehicle.**

1. Drain the transaxle oil.
2. Remove in the order indicated in the table.
3. Install in the reverse order of removal.

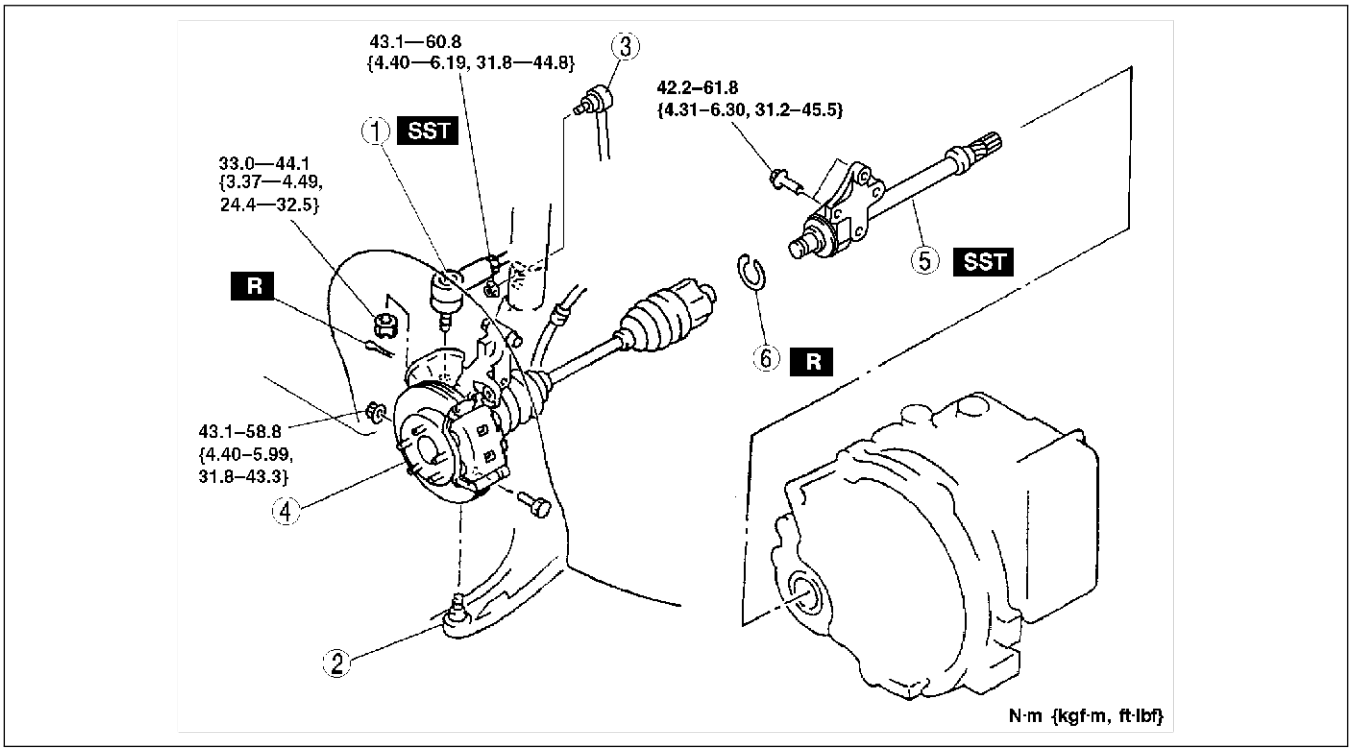

AME6316W003

1	Tie-rod end (See M–5 Tie-rod End Ball Joint Removal Note)
2	Lower arm ball joint (See M–5 Lower Arm Ball Joint Removal Note)
3	Stabilizer control link

4	Drive shaft and axle assembly (See M–5 Drive Shaft and Axle Assmebly Removal Note)
5	Joint shaft (See M–5 Joint Shaft Removal Note) (See M–6 Joint Shaft Installation Note)
6	Clip (See M–9 Clip Installation Note)

M

Clip Installation Note

1. Install a new clip on the joint shaft with the opening facing upward. Ensure that the diameter of the clip does not exceed the specification on installation.
2. After installation, measure the outer diameter. If it exceeds the specification, repeat steps 1—2 using a new clip.

Outer diameter specification
30.5—31.2 mm {1.21—1.22 in}

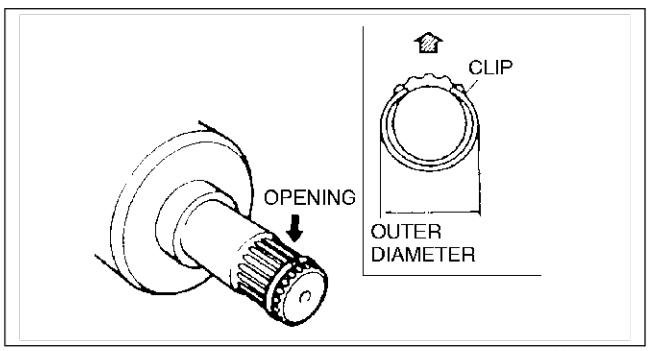

X3U313WA6

JOINT SHAFT (L3) DISASSEMBLY/ASSEMBLY

AME631625700W04

1. Disassemble in the order indicated in the table.
2. Assemble in the reverse order of disassembly.

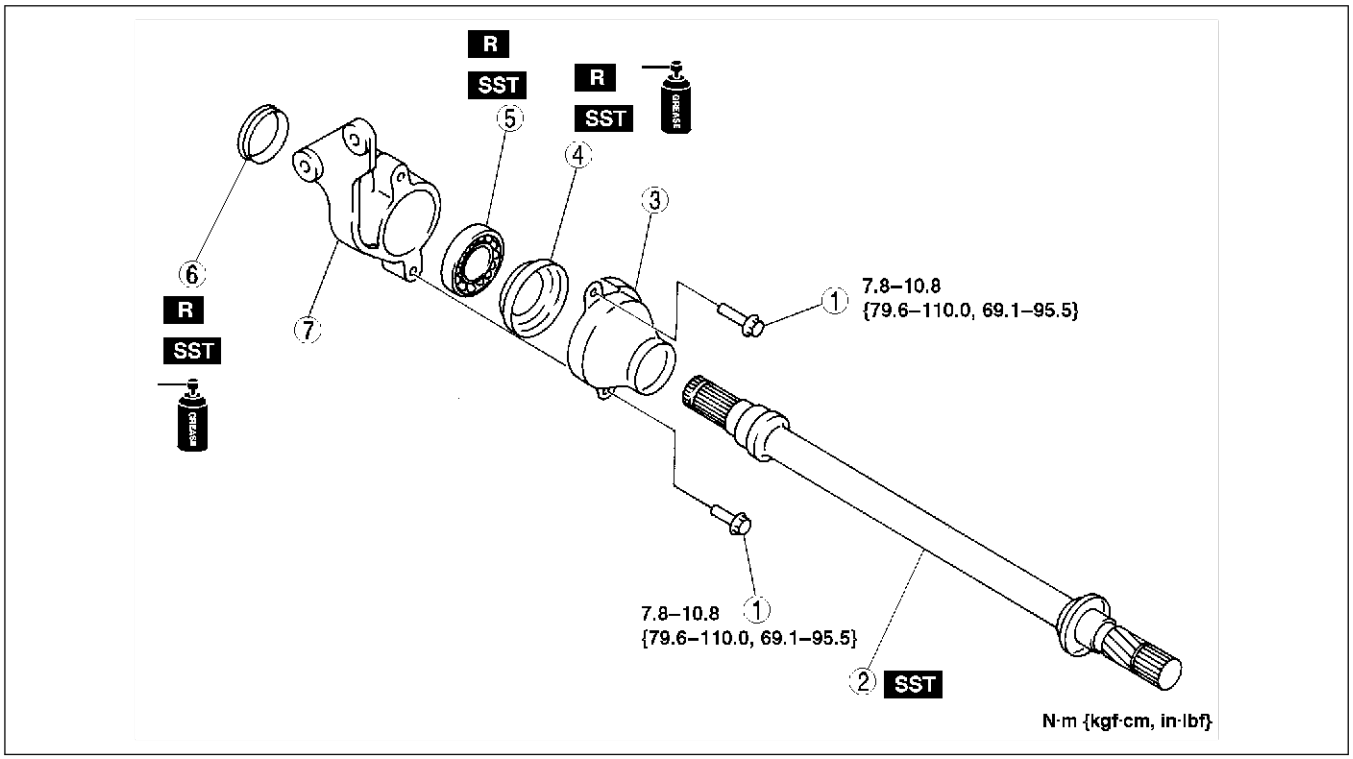

AME6316W004

1	Bolt
2	Joint shaft (See M–10 Joint Shaft Disassembly Note) (See M–12 Joint Shaft Assembly Note)
3	Dust cover
4	Dust seal (differential side) (See M–11 Dust Seal (Differential Side), Bearing Disassembly Note) (See M–12 Dust Seal (Differential Side) Assembly Note)

5	Bearing (See M–11 Dust Seal (Differential Side), Bearing Disassembly Note) (See M–11 Bearing Assembly Note)
6	Dust seal (drive shaft side) (See M–11 Dust Seal (Drive Shaft Side) Assembly Note)
7	Bracket

Joint Shaft Disassembly Note

1. Loosen the dust cover installation bolt, and remove the dust cover from the bracket.
2. Disassemble the joint shaft using a bar and press.

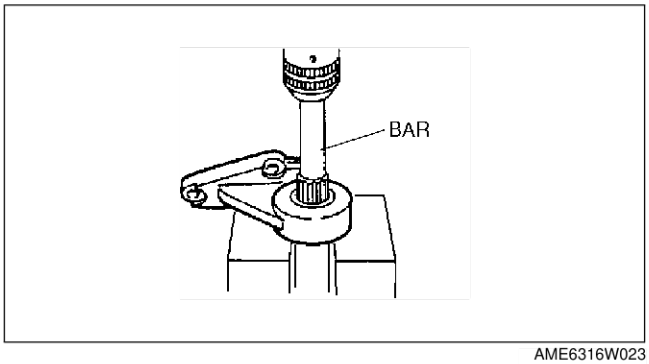

AME6316W023

Dust Seal (Differential Side), Bearing Disassembly Note

1. Remove the dust seal (differential side) and bearing using the **SST** and a press.

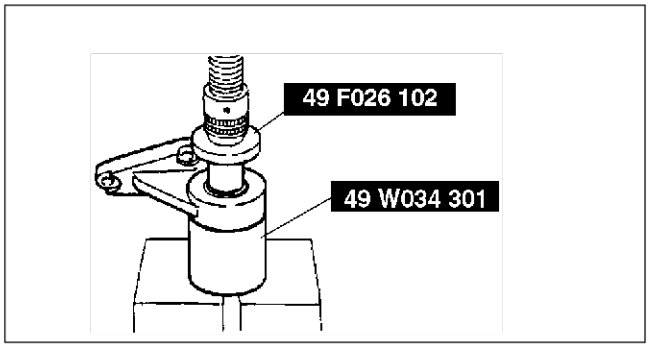

AME6316W024

Dust Seal (Drive Shaft Side) Disassembly Note

1. Remove the dust seal (drive shaft side) using the **SST** and a press.

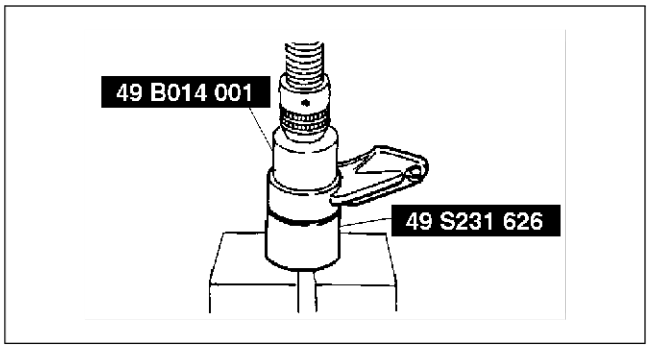

AMJ6316W302

Dust Seal (Drive Shaft Side) Assembly Note

1. Apply grease to the new dust seal lip.
2. Install the new dust seal (drive shaft side) using the **SSTs** and a press.

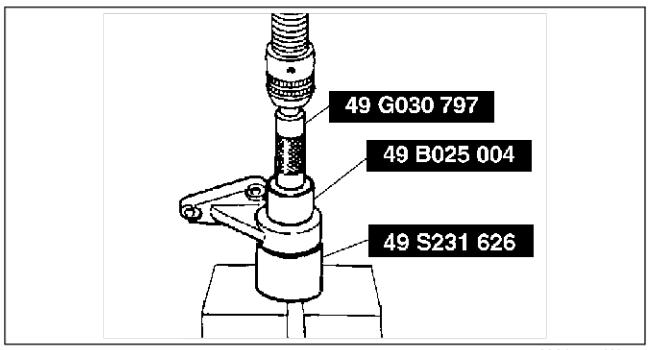

AMJ6316W303

Bearing Assembly Note

1. Install the new bearing using the **SSTs**.

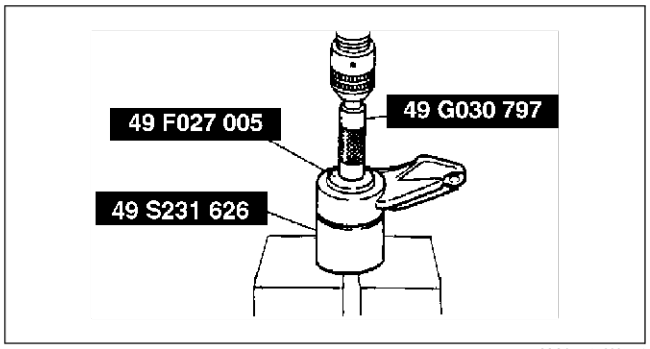

AMJ6316W304

M

Dust Seal (Differential Side) Assembly Note

1. Apply grease to the new dust seal lip.
2. Install the new differential side dust seal using a steel plate, the **SSTs** and a press.

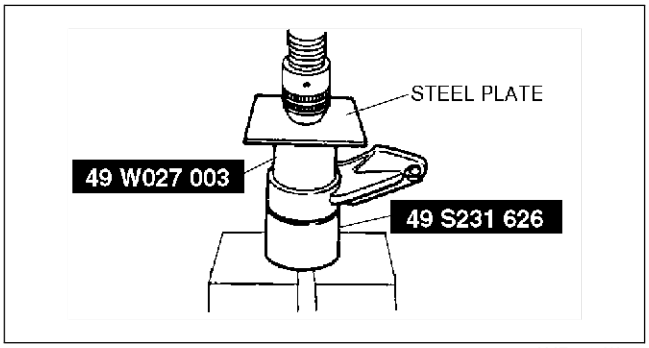

AME6316W027

Joint Shaft Assembly Note

1. Assemble the joint shaft using the **SST** and a press.

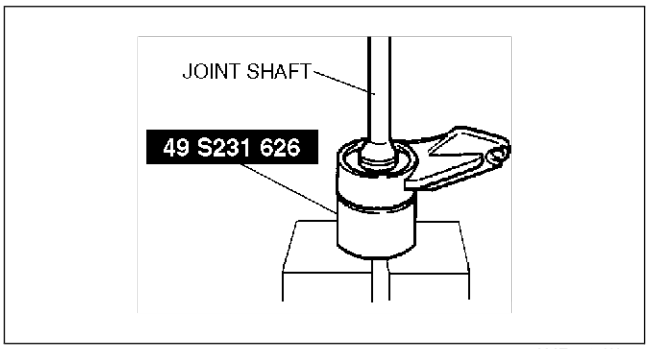

AME6316W025

End Of Sie

JOINT SHAFT (AJ) DISASSEMBLY

AME631625700W05

1. Disassemble in the order indicated in the table.

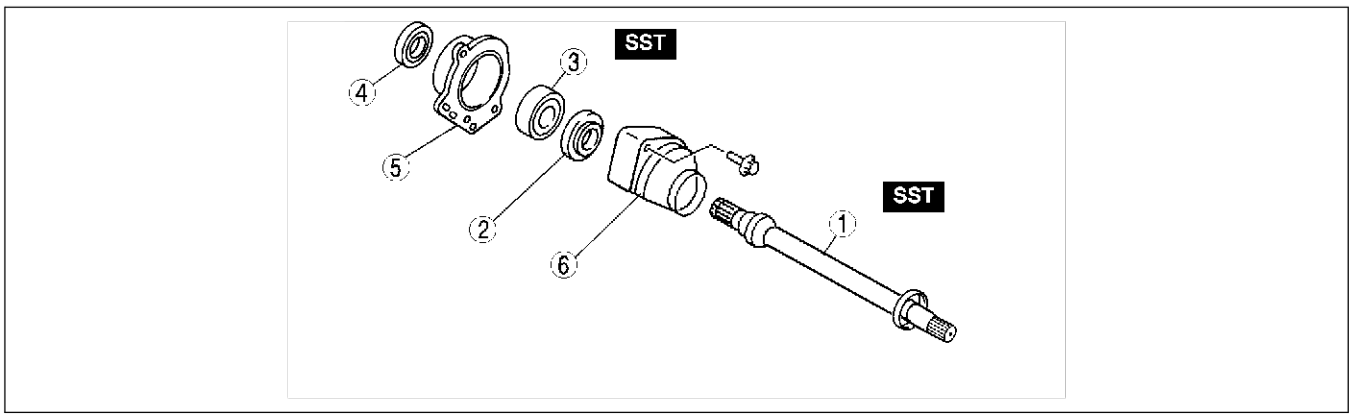

AMU0313W012

1	Joint shaft (See M–13 Joint Shaft Disassembly Note)
2	Dust seal (differential side)
3	Bearing (See M–13 Bearing Disassembly Note)
4	Dust seal (drive shaft side)
5	Bracket
6	Dust cover

Joint Shaft Disassembly Note

1. Disassemble the joint shaft as shown in the figure.

Caution

- **When disassembling the joint shaft, use a V block of adequate size to support the bearing inner race as well, otherwise the bearing inner race will be damaged and the bearing cannot be reused.**

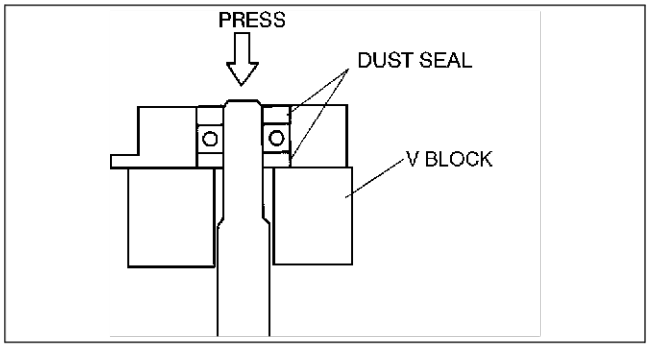

AME6316W026

Bearing Disassembly Note

1. Remove the bearing using the **SSTs** and a press.

Caution

- **Do not damage the rubber part of the dust cover.**

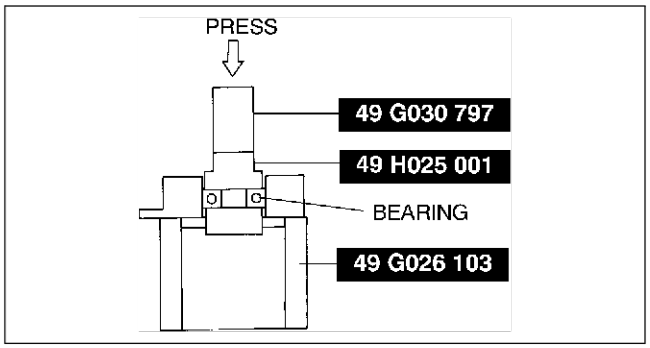

AME6316W022

End Of Step

JOINT SHAFT (AJ) ASSEMBLY

AME631625700W06

1. Assemble in the order indicated in the table.

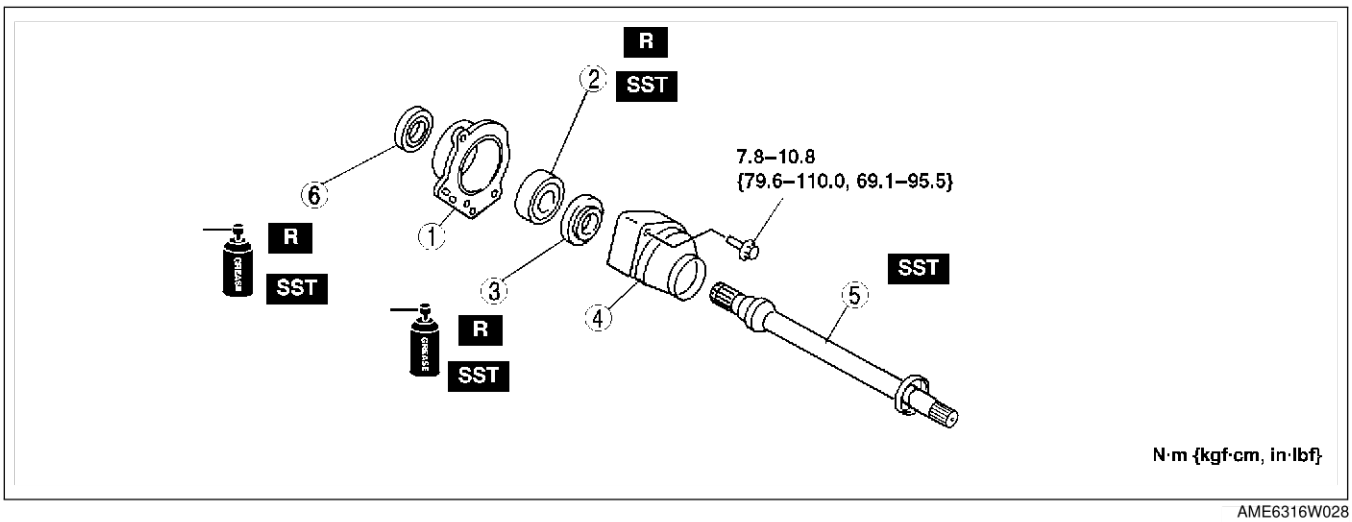

AME6316W028

1	Bracket
2	Bearing (See M–14 Bearing Assembly Note)
3	Dust seal (differential side) (See M–14 Dust Seal (Differential Side) Assembly Note)

4	Dust cover
5	Joint shaft (See M–14 Joint Shaft Assembly Note)
6	Dust seal (drive shaft side) (See M–14 Dust Seal (Drive Shaft Side) Assembly Note)

M

Bearing Assembly Note

1. Install the new bearing using the **SST** and a press.

Caution
- **Press the outer race of the bearing.**

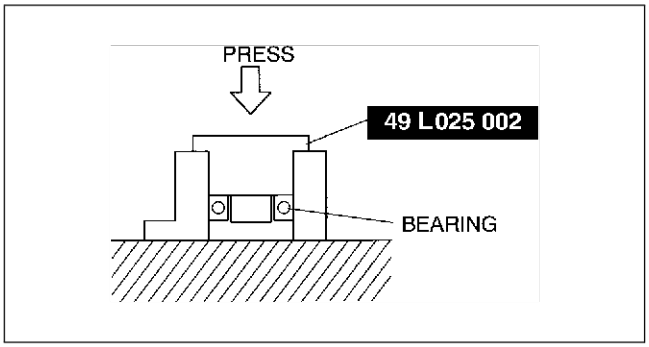

AMU0313W016

Dust Seal (Differential Side) Assembly Note

1. Apply grease to the new dust seal lip.
2. Install the new left side dust seal using a press, steel plate and the **SST**.

Caution
- **Do not damage the rubber part of the dust cover.**

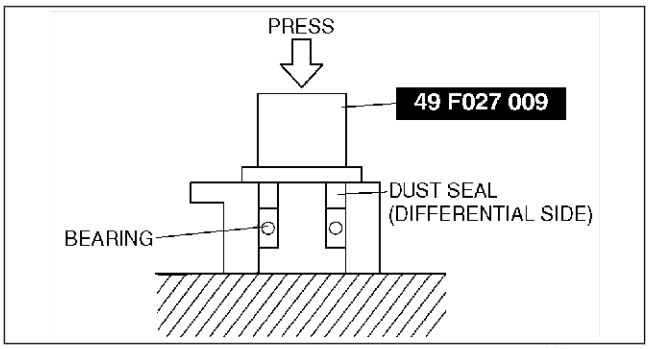

AME6316W006

Joint Shaft Assembly Note

1. Assemble the joint shaft using a press and the **SST**.

Caution
- **Support the inner race of the bearing.**

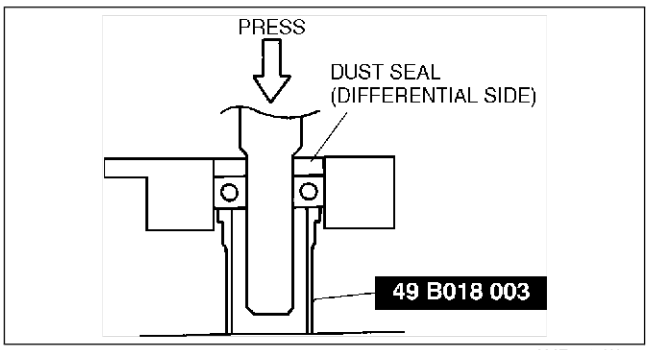

AME6316W007

Dust Seal (Drive Shaft Side) Assembly Note

1. Apply grease to the new dust seal lip.
2. Install the new right side dust seal using the **SSTs** and a press.

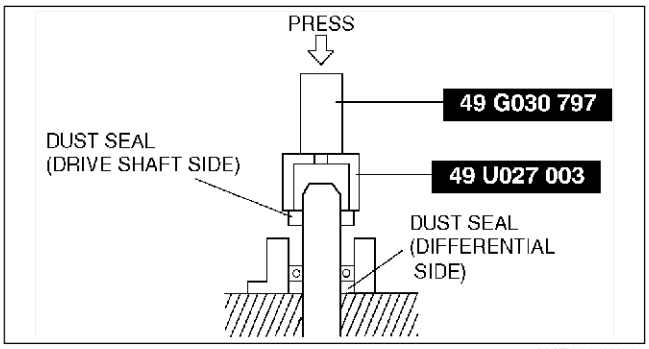

AME6316W008

End Of Sec

JOINT SHAFT (MZR-CD (RF TURBO)) DISASSEMBLY/ASSEMBLY

AME631625700W07

1. Disassemble in the order indicated in the table.
2. Assemble in the reverse order of disassembly.

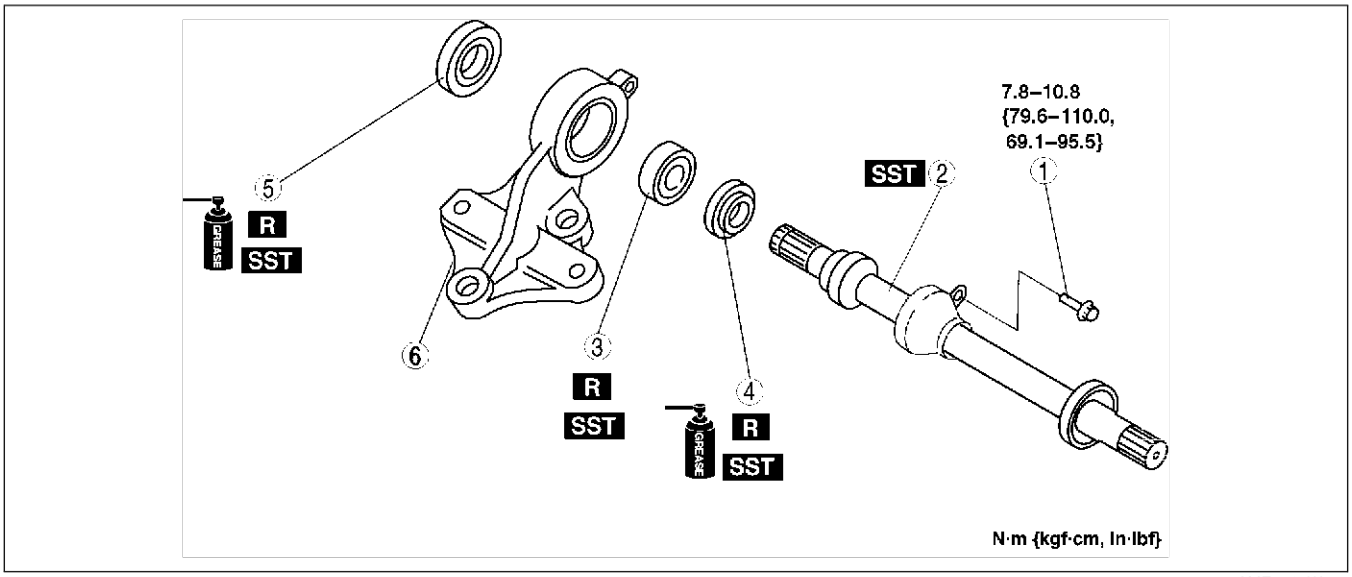

AME6316W020

1	Bolt
2	Joint shaft (See M–15 Joint Shaft Disassembly Note) (See M–17 Joint Shaft Assembly Note)
3	Bearing (See M–16 Dust Seal (Differential Side), Bearing Disassembly Note) (See M–16 Bearing Assembly Note)

4	Dust seal (differential side) (See M–16 Dust Seal (Differential Side), Bearing Disassembly Note) (See M–17 Dust Seal (Differential Side) Assembly Note)
5	Dust seal (drive shaft side) (See M–16 Dust Seal (Drive Shaft Side) Disassembly Note) (See M–16 Dust Seal (Drive Shaft Side) Assembly Note)
6	Bracket

Joint Shaft Disassembly Note

1. Loosen the dust cover installation bolt, and remove the dust cover from the bracket.
2. Disassemble the joint shaft using a bar and press.

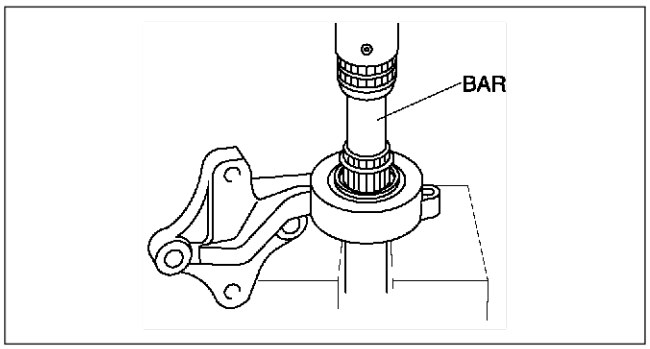

AME6316W012

M

Dust Seal (Differential Side), Bearing Disassembly Note

1. Remove the dust seal (differential side) and bearing using the **SST** and a press.

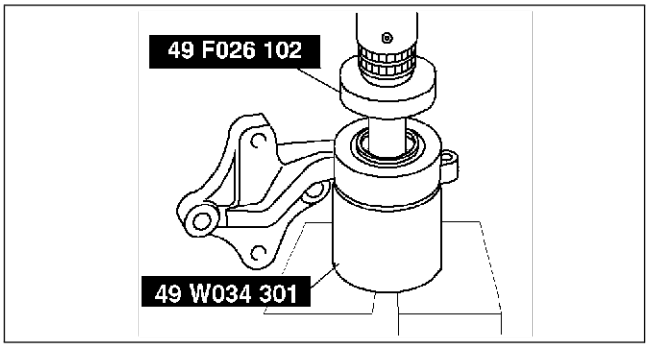

AME6316W013

Dust Seal (Drive Shaft Side) Disassembly Note

1. Remove the dust seal (drive shaft side) using the **SST** and a press.

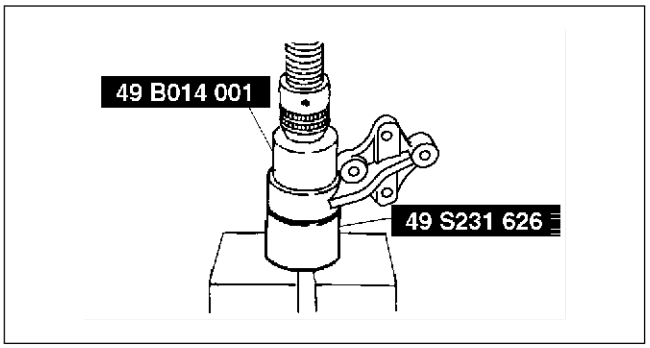

AME6316W014

Dust Seal (Drive Shaft Side) Assembly Note

1. Apply grease to the new dust seal lip.
2. Install the new dust seal (drive shaft side) using the **SSTs** and a press.

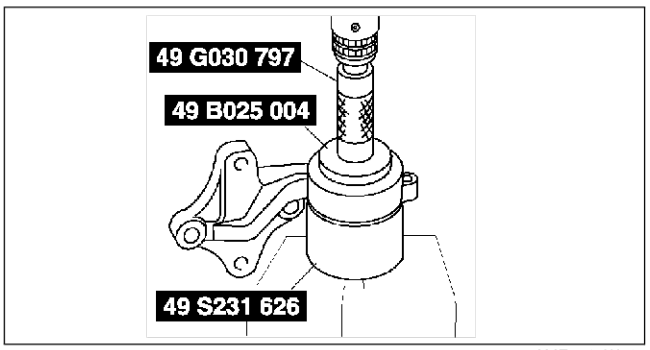

AME6316W015

Bearing Assembly Note

1. Install the new bearing using the **SSTs** and a press.

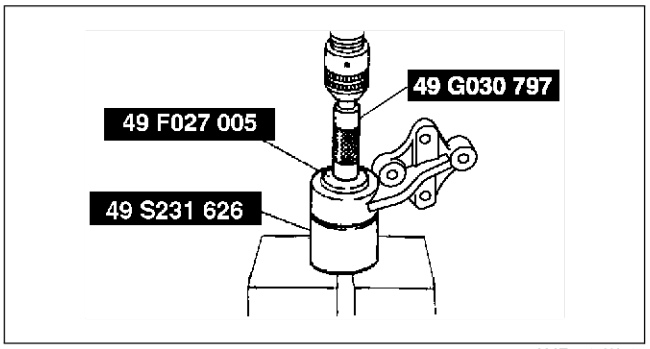

AME6316W016

Dust Seal (Differential Side) Assembly Note

1. Apply grease to the new dust seal lip.
2. Install the new differential side dust seal using a steel plate, the **SSTs** and a press.

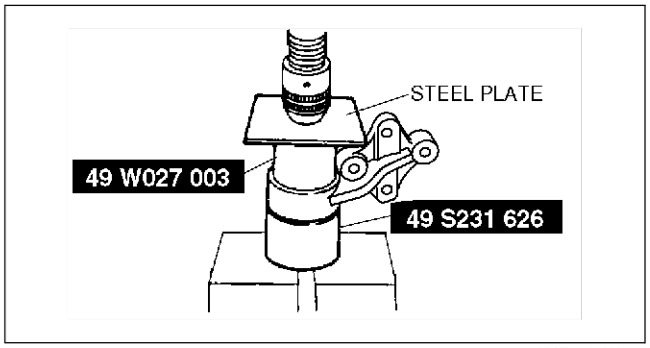

AME6316W005

Joint Shaft Assembly Note

1. Assemble the joint shaft using the **SST** and a press.

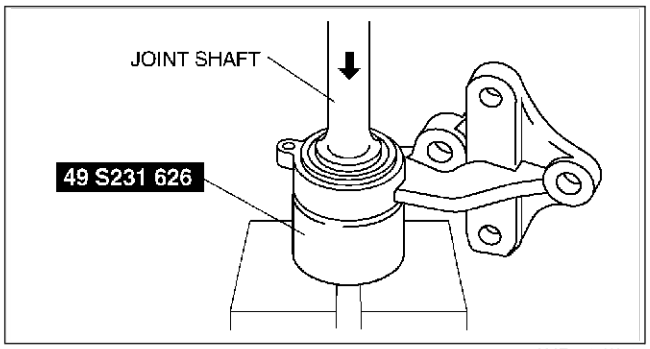

AME6316W017

End Of Step

M

DRIVE SHAFT (L3) REMOVAL/INSTALLATION

AME631625500W04

Caution

- **Performing the following procedures without first removing the ABS wheel-speed sensor may possibly cause an open circuit in the harness if it is pulled by mistake. Before performing the following procedures, remove the ABS wheel-speed sensor (axle side) and fix it to an appropriate place where the sensor will not be pulled by mistake while the vehicle is being serviced.**

1. Drain the transaxle oil (left side).
2. Remove in the order indicated in the table.
3. Install in the reverse order of removal.

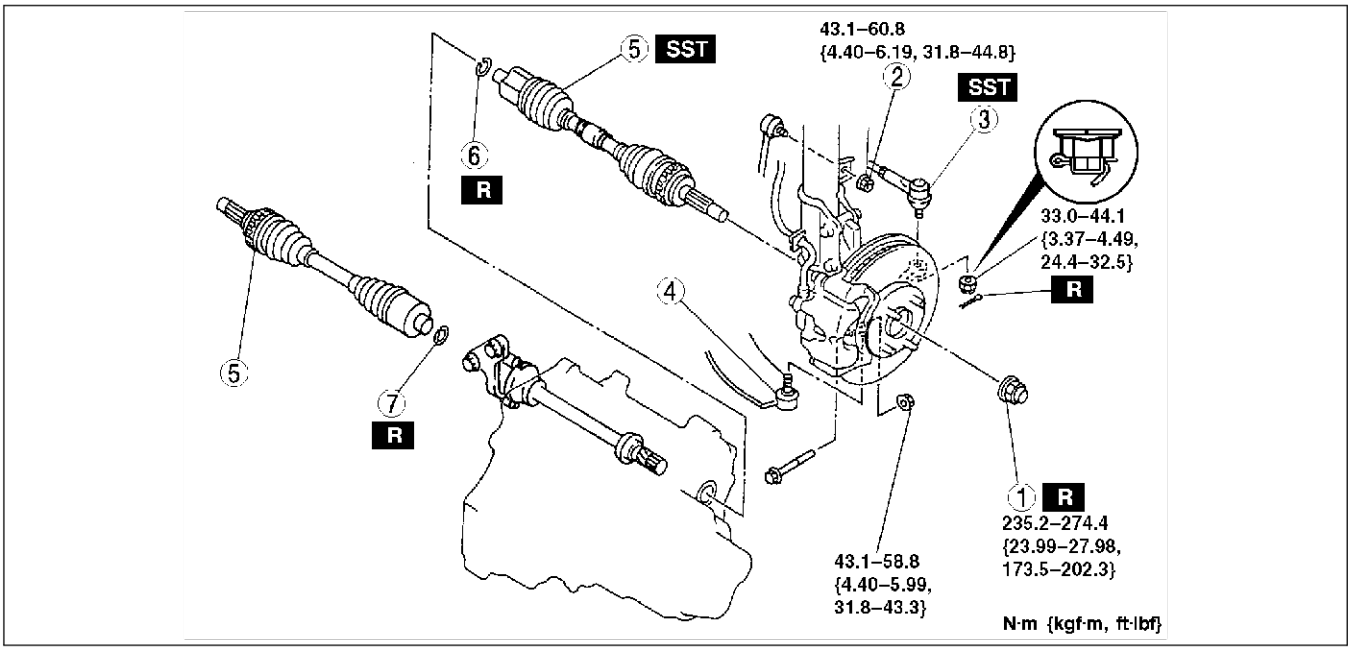

AME6316W021

1	Locknut
2	Stabilizer control link nut
3	Tie-rod end ball joint (See M–5 Tie-rod End Ball Joint Removal Note)
4	Lower arm ball joint (See M–5 Lower Arm Ball Joint Removal Note)

5	Drive shaft (See M–18 Drive Shaft Removal Note) (See M–20 Drive Shaft Installation Note)
6	Clip (drive shaft (left side)) (See M–19 Clip (Drive Shaft (Left Side)) Installation Note)
7	Clip (joint shaft) (See M–6 Clip Installation Note)

Drive Shaft Removal Note

1. Install a spare nut on the drive shaft so that the nut is flush with the end of the drive shaft.
2. Tap the nut with a copper hammer to loosen the drive shaft from the front wheel hub.
3. Separate the drive shaft from the wheel hub.

Caution

- **The sharp edges of the drive shaft can slice or puncture the oil seal. Be careful when removing the drive shaft from the transaxle.**

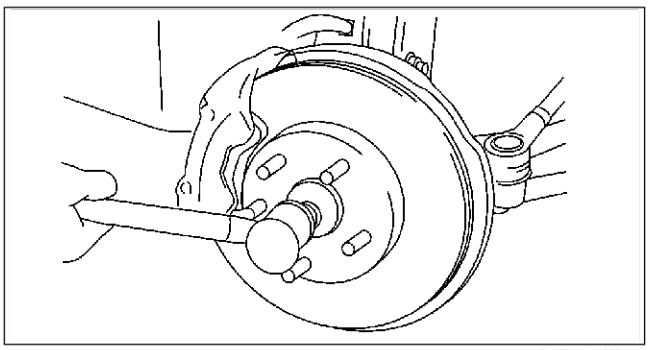

A6E6316W001

4. Separate the left side drive shaft from the transaxle by prying with a bar inserted between the outer ring and the transaxle, as shown in the figure.

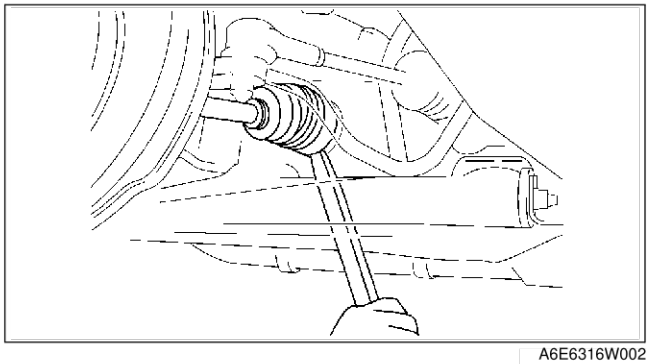
A6E6316W002

5. Disengage the right side drive shaft from the joint shaft by tapping on the differential side outer ring using a bar.
6. Remove the drive shaft being careful not to damage the oil seal by shaft spline.

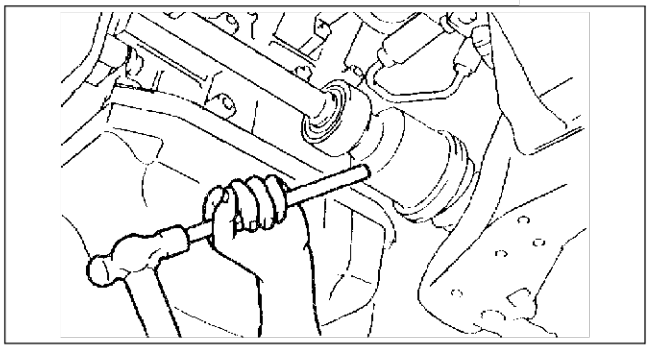
AMJ6316W005

7. Install the **SST** on the transaxle to hold the side gears after the drive shaft is removed.

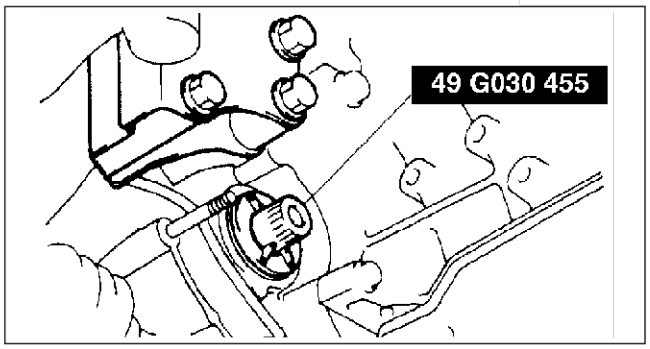

AMJ6316W007

Clip (Drive Shaft (Left Side)) Installation Note

1. Install a new clip on the drive shaft (left side) with the opening facing upward. Ensure that the diameter of the clip does not exceed the specification on installation.
2. After installation, measure the outer diameter. If it exceeds the specification, repeat Steps 1—2 using a new clip.

Outer diameter specification
30.5—31.2 mm {1.21—1.22 in}

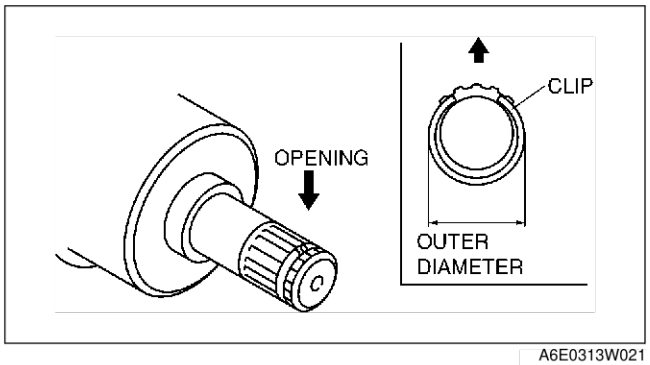

A6E0313W021

M

Drive Shaft Installation Note
Left Side

Caution
- **The sharp edges of the drive shaft can slice or puncture the oil seal. Be careful when installing the drive shaft to the transaxle.**

1. Insert the drive shaft into the wheel hub.
2. Apply transaxle oil to the oil seal lip.
3. Push the drive shaft into the transaxle.
4. After installation, pull the transaxle side outer ring forward to confirm that the drive shaft is securely held by the clip.

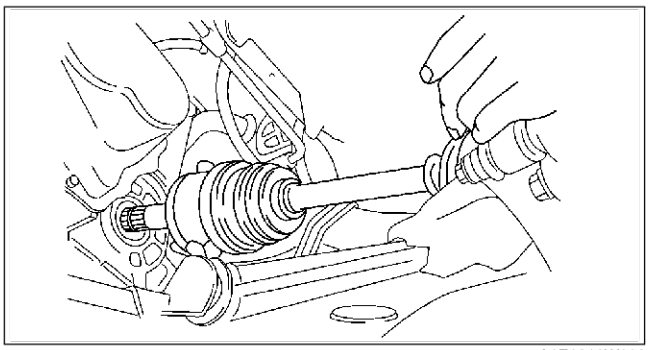

A6E6316W003

Right Side
1. Insert the drive shaft in the wheel hub.
2. Insert the drive shaft into the joint shaft.
3. After installation, pull the transaxle side outer ring forward to confirm that the drive shaft is securely held by the clip.

DRIVE SHAFT (AJ) REMOVAL/INSTALLATION

AME631625500W05

Caution
- **Performing the following procedures without first removing the ABS wheel-speed sensor could cause an open circuit in the harness if it is pulled by mistake. Before performing the following procedures, remove the ABS wheel-speed sensor (axle side) and fix it to an appropriate place where the sensor will not be pulled by mistake while servicing the vehicle.**
- **Removing the right side drive shaft with the shaft bracket installed may cause the deformation of the joint shaft bracket. Therefore, remove or install the right side drive shaft and joint shaft as a component.**

1. Drain the transaxle oil.
2. Remove the steering knuckle, wheel hub and dust cover component. (Right side)
3. Remove in the order indicated in the table.
4. Install in the reverse order of removal.

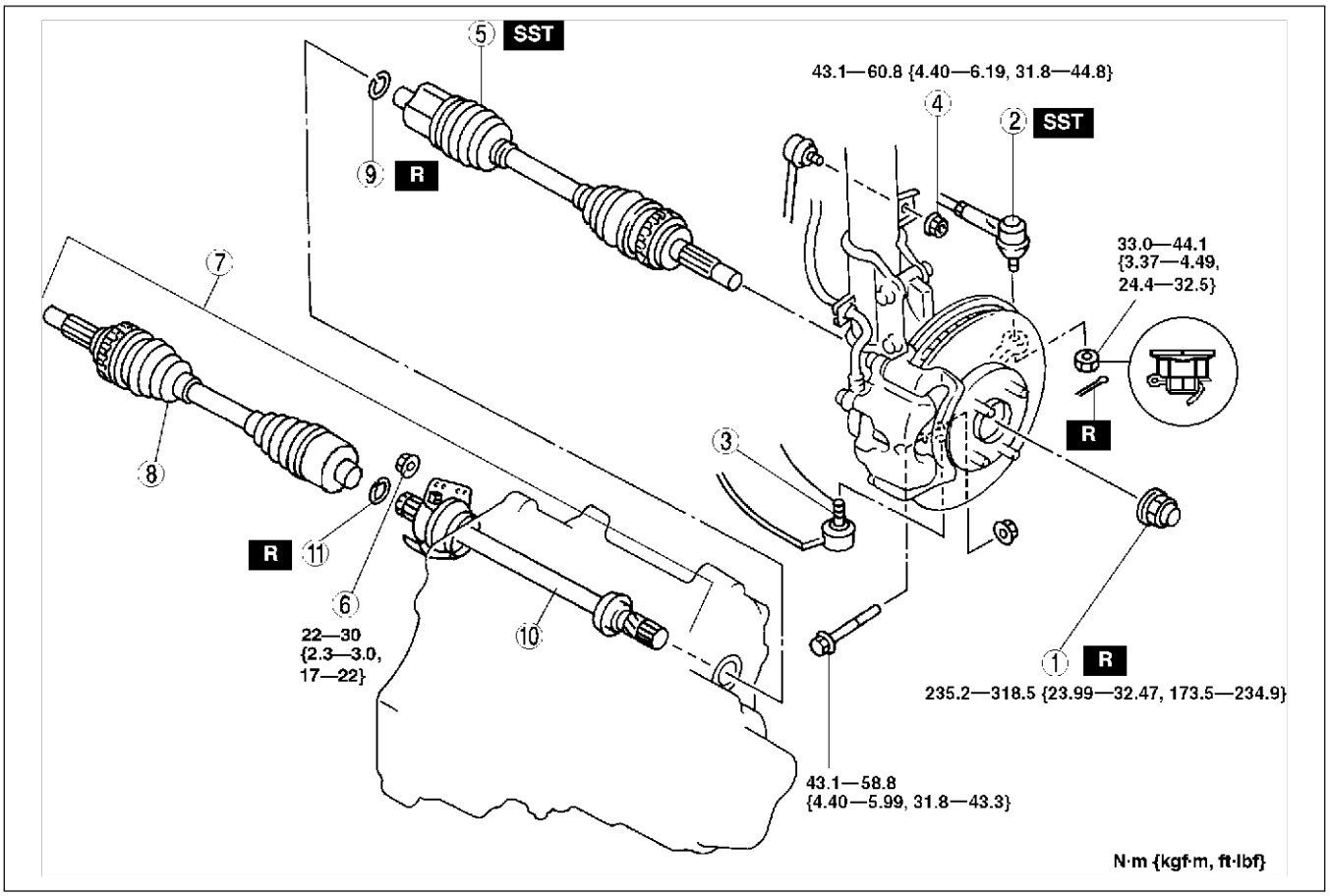

AME6316W010

1	Locknut
2	Tie-rod end (See M–5 Tie-rod End Ball Joint Removal Note)
3	Lower arm ball joint (See M–5 Lower Arm Ball Joint Removal Note)
4	Nut (stabilizer control link)
5	Drive shaft (left side) (See M–21 Drive Shaft (Left Side) Removal Note) (See M–23 Drive Shaft (Left Side) Installation Note)
6	Nut (joint shaft bracket)

7	Drive shaft (right side) and joint shaft (See M–22 Drive Shaft (Right Side) and Joint Shaft Removal Note) (See M–23 Drive Shaft (Right Side) and Joint Shaft Installation Note)
8	Drive shaft (right side) (See M–22 Drive Shaft (Right Side) Removal Note)
9	Clip (drive shaft (left side)) (See M–23 Clip (Drive Shaft (Left Side)) Installation Note)
10	Joint shaft (See M–22 Joint Shaft Installation Note)
11	Clip (joint shaft) (See M–8 Clip Installation Note)

Drive Shaft (Left Side) Removal Note

1. Remove the clinch bolt and nut.
2. Wrap a rag around the ball joint dust boot.
3. Pry the lower arm out of the knuckle.
4. Install a spare nut on the drive shaft so that the nut is flush with the end of the drive shaft.
5. Tap the nut with a copper hammer to loosen the drive shaft from the front wheel hub.

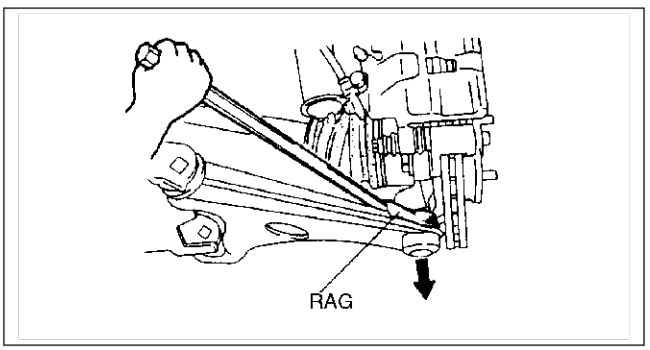

X3U313WAK

M

6. Separate the drive shaft from the wheel hub.

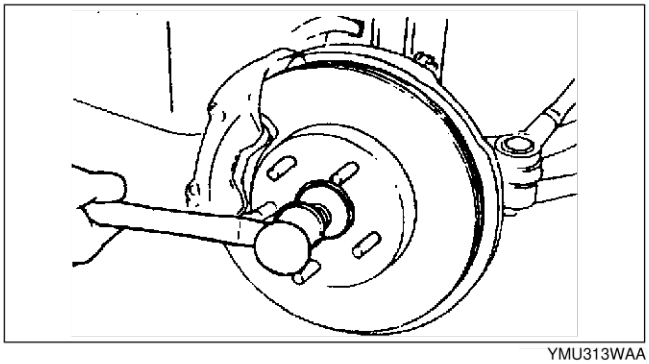

YMU313WAA

7. Separate the left side drive shaft from the transaxle by prying with a bar inserted between the outer ring and the transaxle, as shown in the figure.

Caution

- **The sharp edges of the drive shaft can slice or puncture the oil seal. Be careful when removing the drive shaft from the transaxle.**

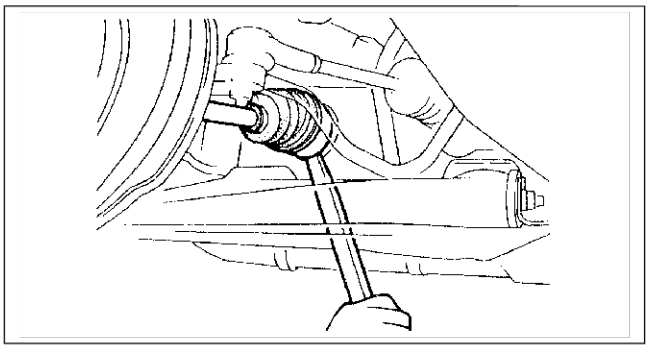

X3U313WAM

Drive Shaft (Right Side) and Joint Shaft Removal Note

1. Remove the drive shaft (right side) and joint shaft component.
2. Install the **SST** (49 G030 455) into the transaxle to hold the side gears after the drive shaft (right side) ad the joint shaft component are removed.

Drive Shaft (Right Side) Removal Note

1. Secure the shaft portion of the joint shaft in a vise.
2. As shown in the figure, insert a pry bar between the drive shaft and the joint shaft and tap on the bar to uncouple them.

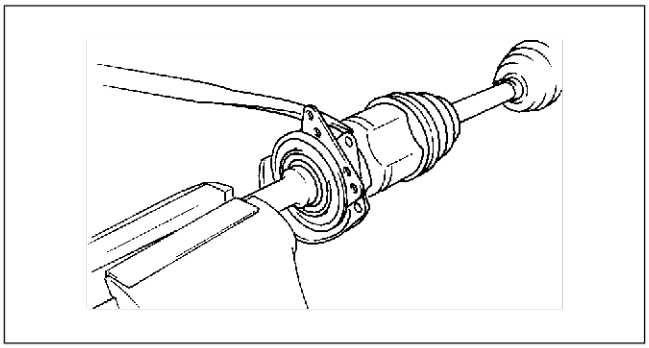

YMU313WAF

Joint Shaft Installation Note

1. Secure the shaft portion of the drive shaft in a vise.
2. Install the joint shaft using a plastic hammer as shown.

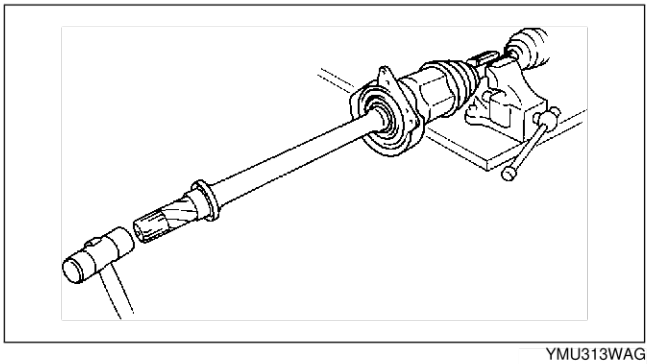

YMU313WAG

Clip (Drive Shaft (Left Side)) Installation Note

1. Install a new clip on the drive shaft (left side) with the opening facing upward. Ensure that the diameter of the clip does not exceed the specification on installation.
2. After installation, measure the outer diameter. If it exceeds the specification, repeat steps 1—2 using a new clip.

   Outer diameter specification
   32.5—33.2 mm {1.28—1.30 in}

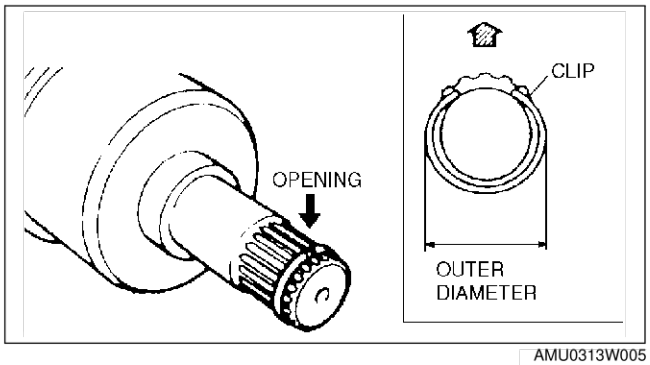

AMU0313W005

Drive Shaft (Right Side) and Joint Shaft Installation Note

1. Apply ATF to the oil seal lip.
2. Push the drive shaft and joint shaft into the transaxle.

Caution

- **The sharp edges of the joint shaft can slice or puncture the oil seal. Be careful when installing the joint shaft to the transaxle.**

Drive Shaft (Left Side) Installation Note

1. Insert the drive shaft into the wheel hub.
2. Apply ATF to the oil seal lip.
3. Push the drive shaft into the transaxle.

Caution

- **The sharp edges of the drive shaft can slice or puncture the oil seal. Be careful when installing the drive shaft to the transaxle.**
- **The oil seals are damaged easily if this procedure is not done correctly.**

4. After installation, pull the transaxle side outer ring forward to confirm that the drive shaft is securely held by the clip.

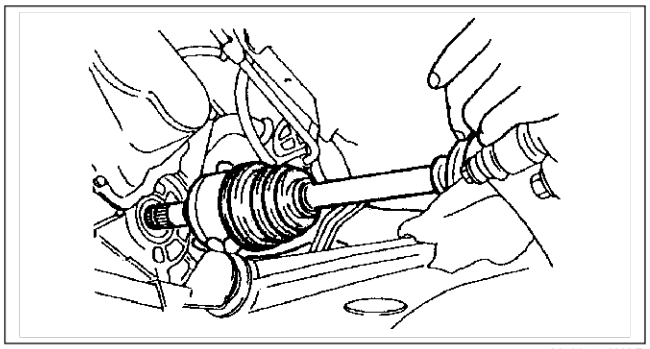
X3U313WAR

End Of Sta

M

DRIVE SHAFT (MZR-CD (RF TURBO)) REMOVAL/INSTALLATION

AME631625500W06

Caution

- **Performing the following procedures without first removing the ABS wheel-speed sensor may possibly cause an open circuit in the harness if it is pulled by mistake. Before performing the following procedures, remove the ABS wheel-speed sensor (axle side) and fix it to an appropriate place where the sensor will not be pulled by mistake while the vehicle is being serviced.**

1. Drain the transaxle oil.
2. Remove in the order indicated in the table.
3. Install in the reverse order of removal.

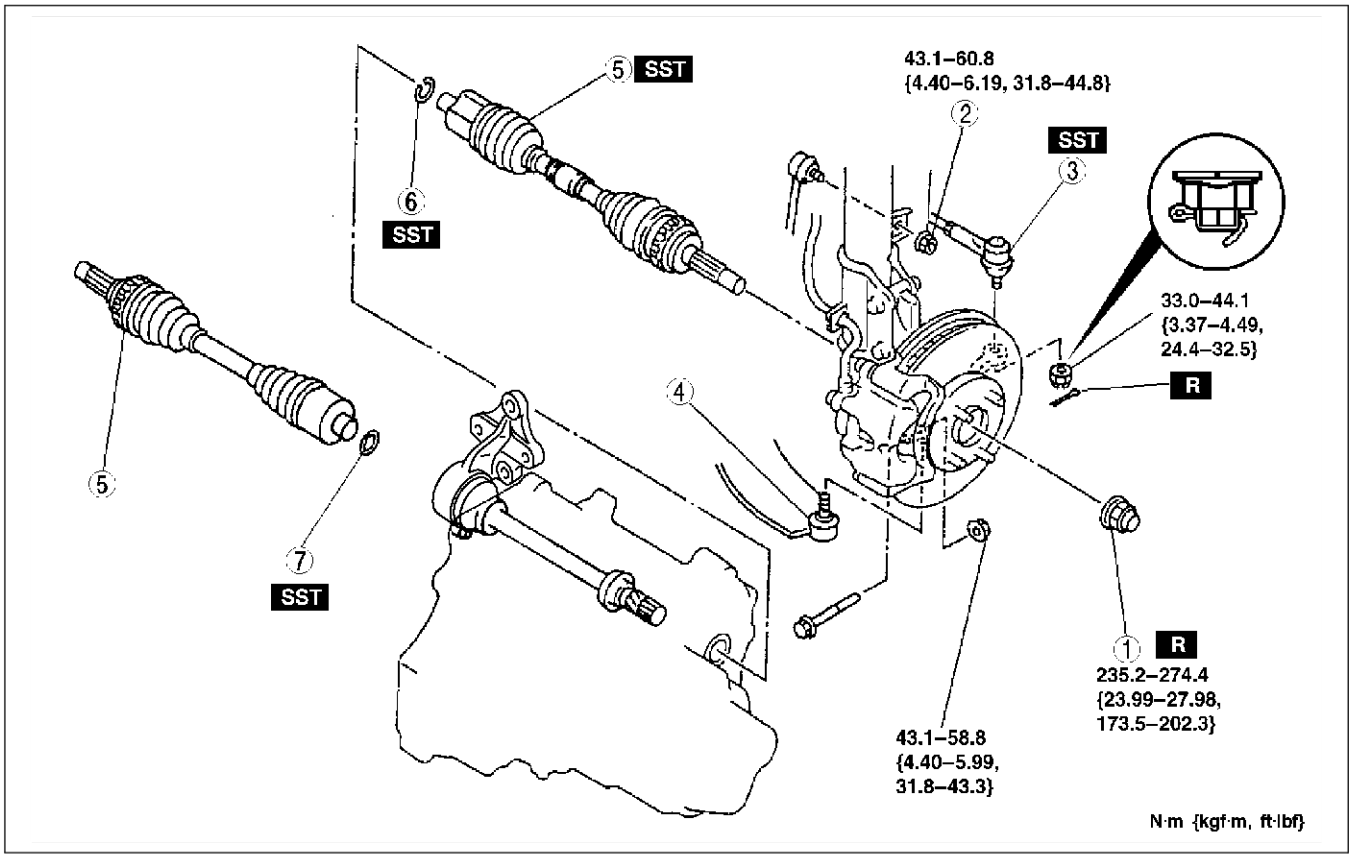

AME6316W011

1	Locknut
2	Stabilizer control link nut
3	Tie-rod end ball joint (See M–5 Tie-rod End Ball Joint Removal Note)
4	Lower arm ball joint (See M–5 Lower Arm Ball Joint Removal Note)

5	Drive shaft (See M–25 Drive Shaft Removal Note) (See M–26 Drive Shaft Installation Note)
6	Clip (drive shaft (left side)) (See M–25 Clip (Drive Shaft (Left Side)) Installation Note)
7	Clip (joint shaft) (See M–9 Clip Installation Note)

Drive Shaft Removal Note

1. Install a spare nut onto the drive shaft so that the nut is flush with the end of the drive shaft.
2. Tap the nut with a copper hammer to loosen the drive shaft from the front wheel hub.
3. Separate the drive shaft from the wheel hub.

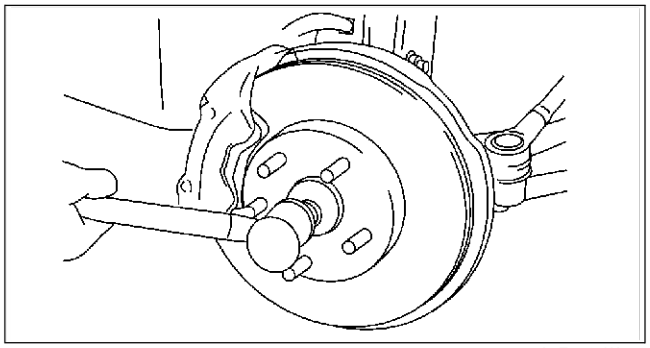
A6E6316W001

Caution

- **The sharp edges of the drive shaft can slice or puncture the oil seal. Be careful when removing the drive shaft from the transaxle.**

4. Separate the left side drive shaft from the transaxle by prying with a bar inserted between the outer ring and the transaxle, as shown in the figure.

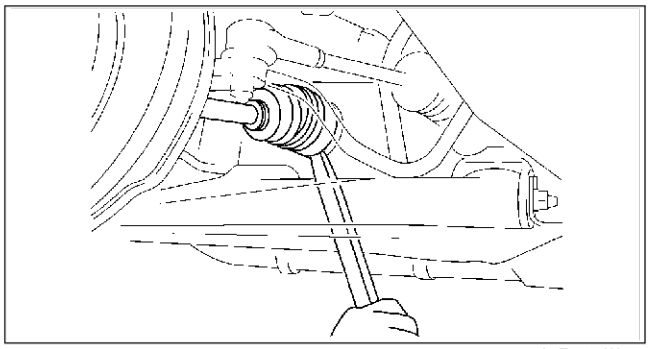
A6E6316W002

5. Disengage the right side drive shaft from the joint shaft by tapping on the differential side outer ring using a bar.

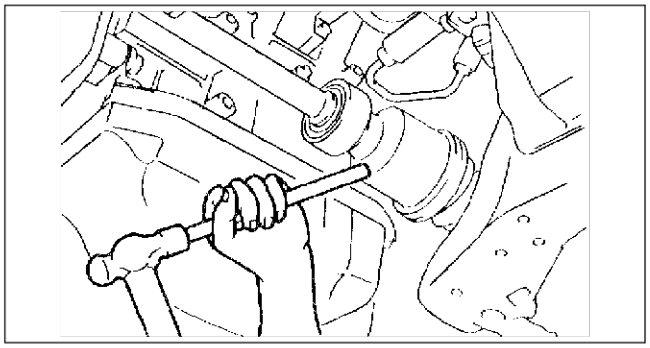
AMJ6316W005

Caution

- **Protect the water pipes using a rag when hammering the outer ring (differential side).**

6. Remove the drive shaft being careful not to damage the oil seal by shaft spline.

Clip (Drive Shaft (Left Side)) Installation Note

1. Install a new clip on the drive shaft (left side) with the opening facing upward. Ensure that the diameter of the clip does not exceed the specification on installation.
2. After installation, measure the outer diameter. If it exceeds the specification, repeat Steps 1—2 using a new clip.

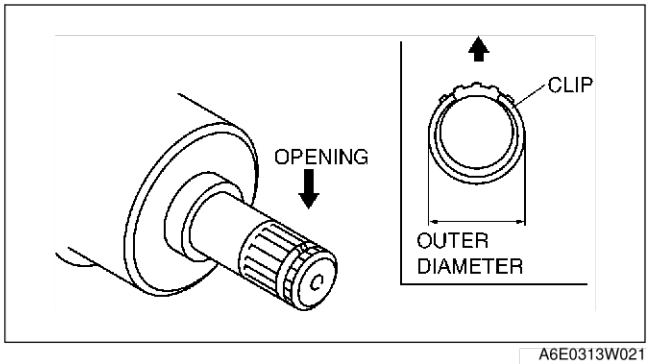

A6E0313W021

Outer diameter specification
31.2—33.2 mm {1.23—1.30 in}

M

Drive Shaft Installation Note
Left Side

Caution
- **The sharp edges of the drive shaft can slice or puncture the oil seal. Be careful when installing the drive on the transaxle.**

1. Insert the drive shaft into the wheel hub.
2. Apply transaxle oil to the oil seal lip.
3. Push the drive shaft into the transaxle.
4. After installation, pull the transaxle side outer ring forward to confirm that the drive shaft is securely held by the clip.

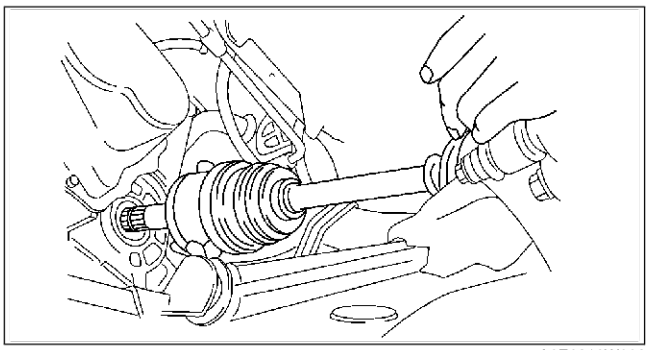

A6E6316W003

Right Side
1. Insert the drive shaft into the wheel hub.
2. Insert the drive shaft into the joint shaft.
3. After installation, pull the transaxle side outer ring forward to confirm that the drive shaft is securely held by the clip.

End Of Sie

DRIVE SHAFT (TRIPOD JOINT TYPE) DISASSEMBLY/ASSEMBLY

AME631625500W07

1. Disassemble in the order indicated in the table.
2. Assemble in the reverse order of disassembly.

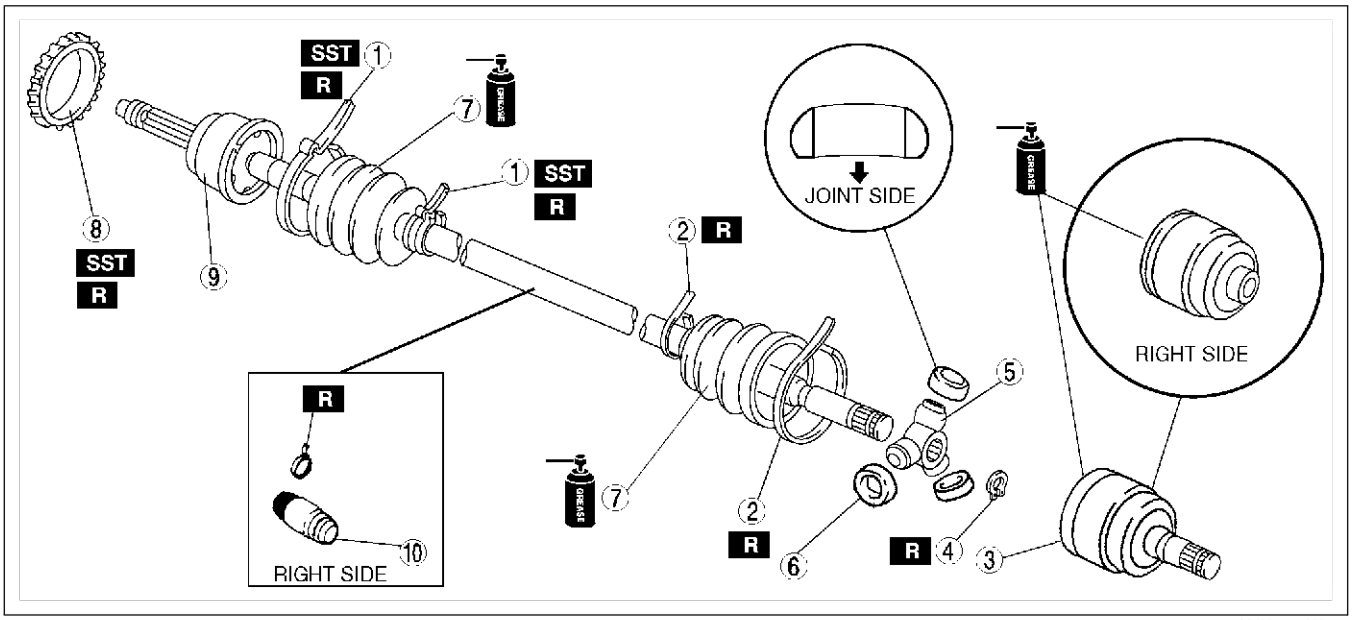

AMU0313W014

1	Boot band (wheel side) (See M–27 Boot Band (Wheel Side) Disassembly Note) (See M–31 Boot Band (Wheel Side) Assembly Note)
2	Boot band (transaxle side) (See M–28 Boot Band (Transaxle Side) Disassembly Note) (See M–31 Boot Band (Transaxle Side) Assembly Note)
3	Outer ring (See M–28 Outer Ring Disassembly Note) (See M–30 Outer Ring Assembly Note)
4	Snap ring (See M–28 Snap Ring, Tripod Joint Disassembly Note) (See M–30 Tripod Joint, Snap Ring Assembly Note)

5	Tripod joint (See M–28 Snap Ring, Tripod Joint Disassembly Note) (See M–30 Tripod Joint, Snap Ring Assembly Note)
6	Free ring
7	Boot (See M–29 Boot Disassembly Note) (See M–30 Boot Assembly Note)
8	ABS sensor rotor (See M–29 ABS Sensor Rotor Disassembly Note) (See M–30 ABS Sensor Rotor Assembly Note)
9	Shaft and ball joint component
10	Dynamic damper (See M–29 Dynamic Damper Assembly Note)

M

Boot Band (Wheel Side) Disassembly Note

Note

- The boot band does not need to be removed unless it is being replaced.

1. Remove the boot clamp with end clamp pliers as shown and discard the clamp.

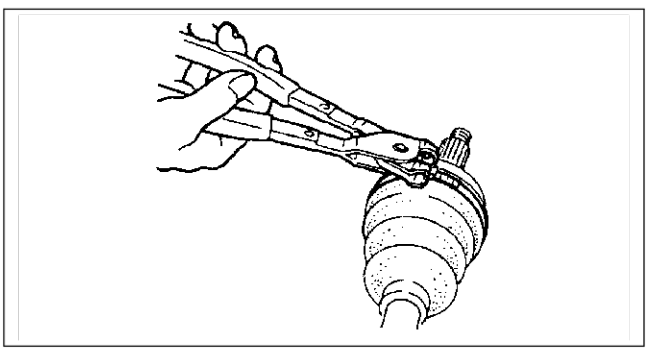

X3U313WAT

Boot Band (Transaxle Side) Disassembly Note

1. Pry up the locking clips using a screwdriver.
2. Pull back the end of the band.

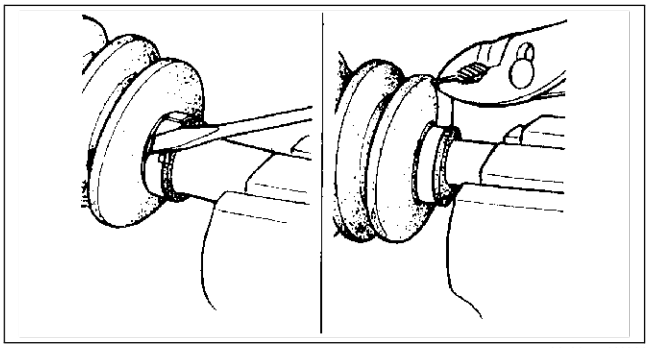

X3U313WAU

Outer Ring Disassembly Note

1. Mark the outer ring and the shaft for proper assembly.
2. Remove the outer ring.

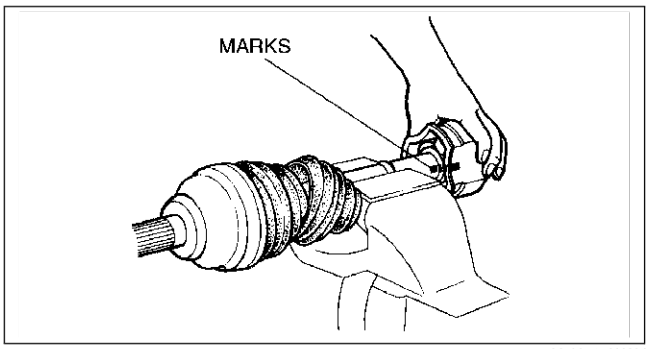

X3U313WAV

Snap Ring, Tripod Joint Disassembly Note

1. Mark the shaft and tripod joint for proper assembly.
2. Remove the snap ring using snap-ring pliers.
3. Remove the tripod joint from the shaft.

Caution

- **Do not tap the tripod joint with a hammer.**

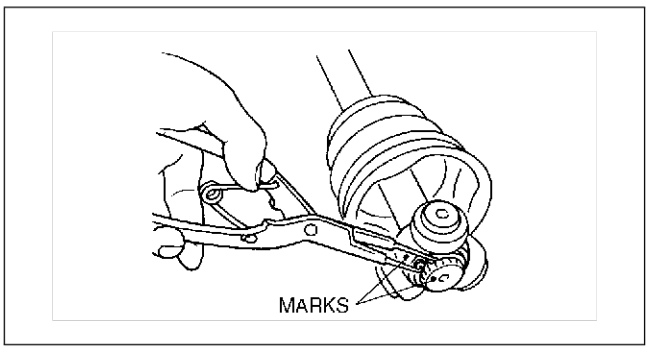

Z6U0313W105

Boot Disassembly Note

Note
- The wheel side boot does not need to be removed unless replacing it, or both the ball joint and shaft component.
- Do not strip the tape until the boot is assembled.

1. Wrap the shaft splines with tape.
2. Remove the boot.

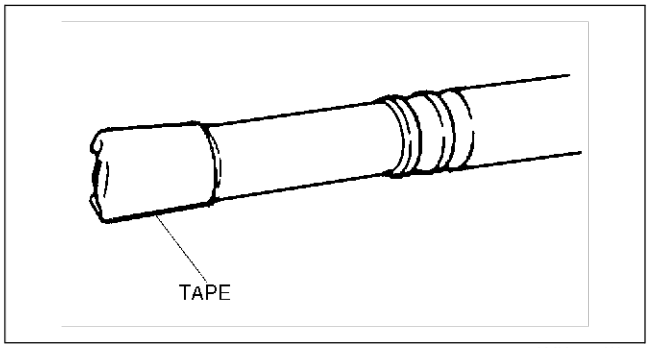

AMU0313W006

ABS Sensor Rotor Disassembly Note

Caution
- **Do not remove the sensor rotor unless it is necessary.**
- **Do not reuse the sensor rotor if removed.**

1. Tap the ABS sensor rotor off the drive shaft using a chisel.

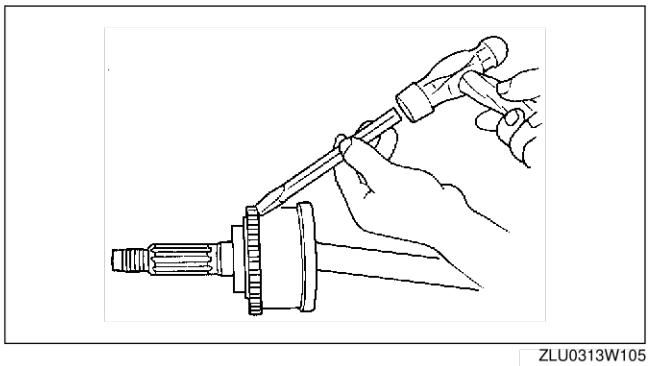
ZLU0313W105

Dynamic Damper Assembly Note

1. Install the dynamic damper as shown in the figure.

   Standard length
   270.7—276.7 mm {10.66—10.89 in}

2. Install the new boot band on the dynamic damper.

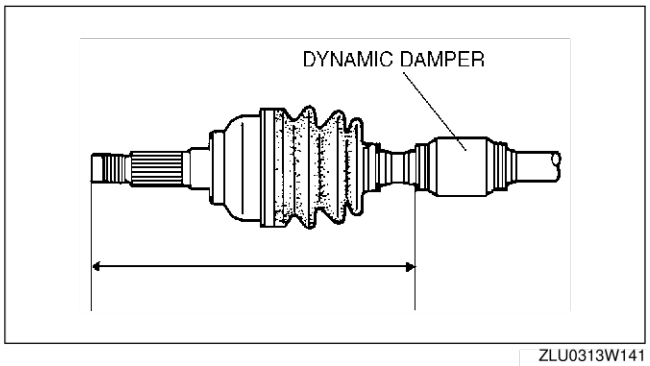

ZLU0313W141

M

ABS Sensor Rotor Assembly Note

1. Set a new ABS sensor rotor on the drive shaft and press it on using the **SSTs**.

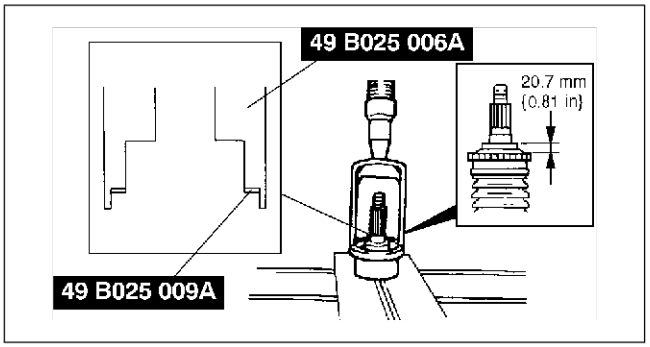

ZMU313WAJ

Boot Assembly Note

Note
- The wheel side and transaxle side boots are different.

1. Fill the boot (wheel side) with the specified grease supplied in the boot kit.

Caution
- **Do not touch grease with your hand. Apply it from the tube to prevent foreign matter entering the boot.**

Grease amount
130—150 g {4.59—5.29 oz}

2. With the splines of the shaft still wrapped in tape from the disassembly procedure, install the boot.
3. Remove the tape.

Tripod Joint, Snap Ring Assembly Note

1. Align the marks and install the tripod joint using a bar and a hammer.

Caution
- **Do not damage the roller.**

2. Install the new snap ring using a snap-ring pliers.

Caution
- **Be sure the snap ring engages completely in the groove of the shaft.**

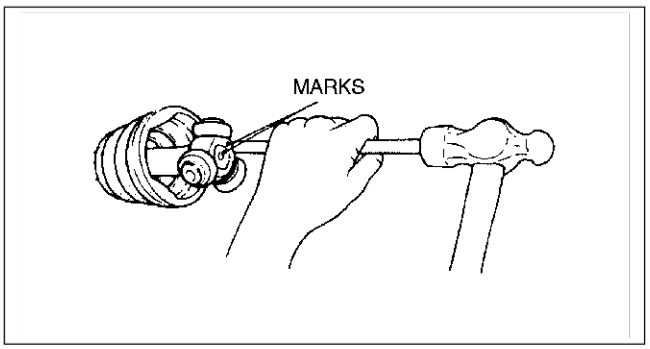

X3U313WB1

Outer Ring Assembly Note

1. Fill the outer ring and boot (transaxle side) with the specified grease supplied in the boot kit.

Caution
- **Do not touch grease with your hand. Apply it from the tube to prevent foreign matter entering the boot.**

Grease amount
Left side: 180—200 g {6.36—7.06 oz}
Right side: 190—210 g {6.71—7.41 oz}

2. Install the outer ring.
3. Set the drive shaft to the standard length.

Standard length

mm {in}

Left side	Right side
622.9—632.9 {24.53—24.91}	565.9—575.9 {22.28—22.67}

4. Release any trapped air from the boots by carefully lifting up the small end of each boot with a cloth wrapped screwdriver.

   Caution
   - **Do not let grease leak.**
   - **Do not damage the boot.**

5. Verify that the drive shaft length is within the standard.

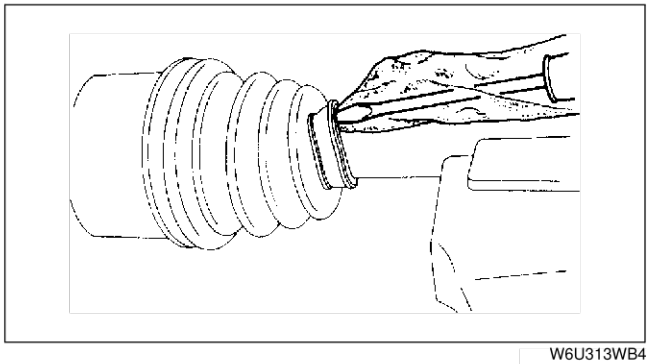
W6U313WB4

Boot Band (Transaxle Side) Assembly Note

1. Fold the band in the direction opposite to the forward revolving direction of the drive shaft and pull it tight using pliers.
2. Lock the end of the band by bending the locking clips.

   Caution
   - **Install the band into the groove securely.**

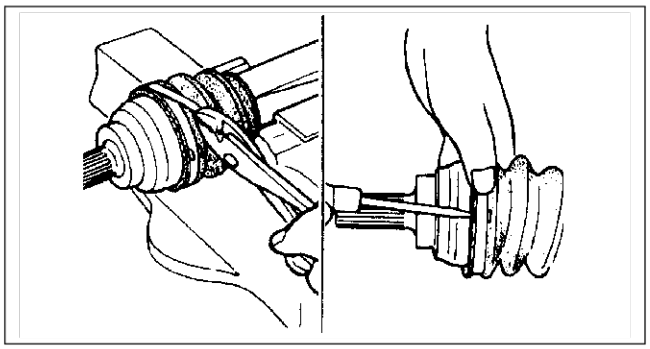
X3U313WB4

Boot Band (Wheel Side) Assembly Note

1. Adjust clearance A by turning the adjusting bolt of the **SST**.

   Clearance A
   2.9 mm {0.11 in}

2. Crimp the wheel side small boot band using the **SST**. Verify that clearance B is within the specification.
   - If clearance B is more than the specification, reduce clearance A of the **SST** and crimp the boot again.
   - If clearance B is less than the specification, replace the boot band, increase clearance A of the **SST**, and crimp the new boot.

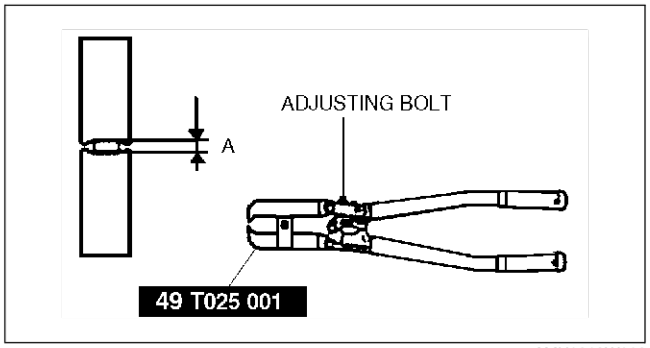

AMU0313W003

   Clearance B
   2.4—2.8 mm {0.095—0.110 in}

3. Verify that the boot band does not protrude from the boot band installation area.
   - If it does, replace the boot band and repeat steps 2 and 3.
4. Fill the boot with the repair kit grease.
5. Adjust clearance A by turning the adjusting bolt of the **SST**.

   Clearance A
   3.2 mm {0.13 in}

6. Crimp the wheel side big boot band using the **SST**.

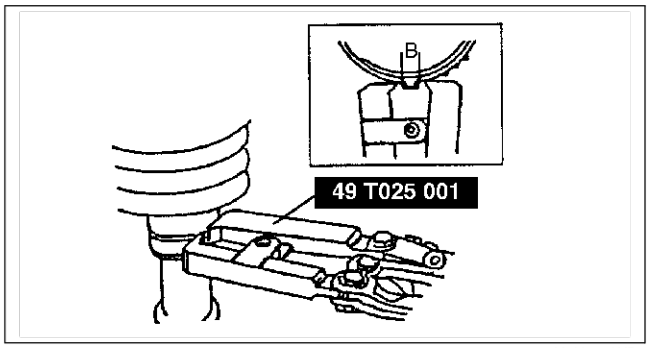

X3U313WB6

M

7. Verify that clearance B is within the specification.
   - If clearance B is more than the specification, reduce clearance A of the **SST** and crimp the boot again.
   - If clearance B is less than the specification, replace the boot band, increase clearance A of the **SST** and crimp the new boot.

Clearance B
2.4—2.8 mm {0.095—0.110 in}

8. Verify that the boot band does not protrude from the boot band installation area.
   - If it does, replace the boot band and repeat steps 7 and 8.

DRIVE SHAFT (DOUBLE OFFSET JOINT TYPE) DISASSEMBLY/ASSEMBLY

AME631625500W08

1. Disassemble in the order indicated in the table.
2. Assemble in the reverse order of disassembly.

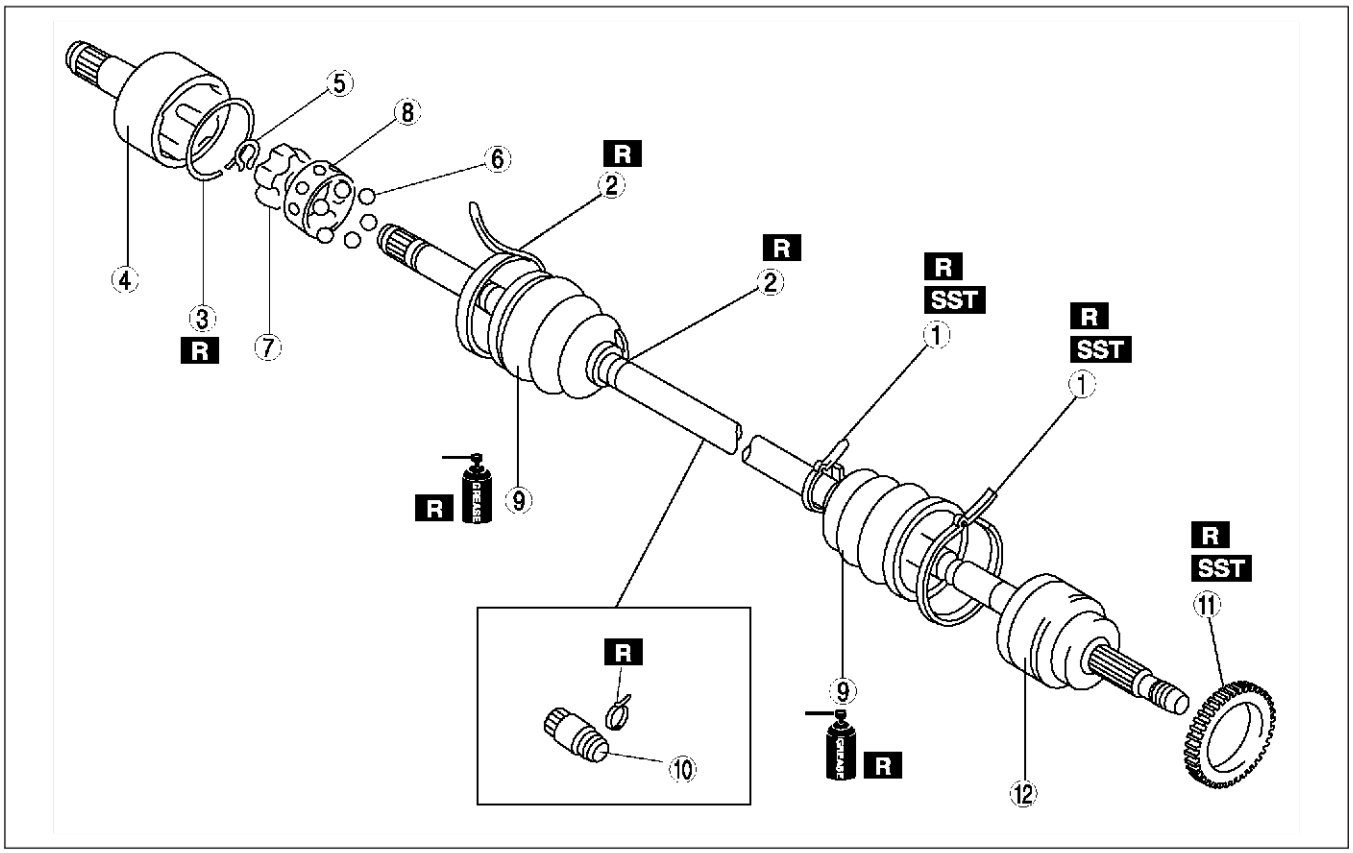

AME6316W018

1	Boot band (wheel side) (See M–27 Boot Band (Wheel Side) Disassembly Note) (See M–31 Boot Band (Wheel Side) Assembly Note)
2	Boot band (transaxle side) (See M–28 Boot Band (Transaxle Side) Disassembly Note) (See M–31 Boot Band (Transaxle Side) Assembly Note)
3	Clip (See M–33 Clip Disassembly Note) (See M–34 Outer Ring, Clip Assembly Note)
4	Outer ring (See M–34 Outer Ring, Clip Assembly Note)
5	Snap ring (See M–33 Balls, Inner Ring, Cage Disassembly Note) (See M–34 Cage, Inner Ring, Balls, Snap Ring Assembly Note)

6	Balls (See M–33 Balls, Inner Ring, Cage Disassembly Note) (See M–34 Cage, Inner Ring, Balls, Snap Ring Assembly Note)
7	Inner Ring (See M–33 Balls, Inner Ring, Cage Disassembly Note) (See M–34 Cage, Inner Ring, Balls, Snap Ring Assembly Note)
8	Cage (See M–33 Balls, Inner Ring, Cage Disassembly Note) (See M–34 Cage, Inner Ring, Balls, Snap Ring Assembly Note)
9	Boot (See M–33 Boot Assembly Note)
10	Dynamic damper (See M–33 Dynamic Damper Assembly Note)
11	ABS sensor rotor (See M–29 ABS Sensor Rotor Disassembly Note) (See M–30 ABS Sensor Rotor Assembly Note)
12	Shaft and ball joint component

Clip Disassembly Note

1. Mark the drive shaft and outer ring for proper assembly.

   Caution
   - **Mark with paint; do not use a punch.**

2. Remove the clip.

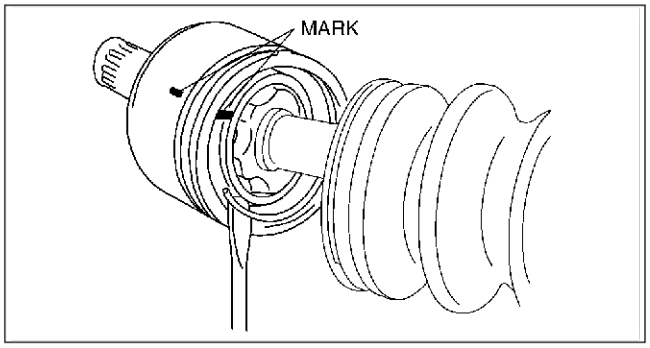

A6E6316W010

Balls, Inner Ring, Cage Disassembly Note

1. Mark the inner ring and cage.

   Caution
   - **Mark with paint; do not use a punch.**

2. Turn the cage approximately **30 degree** and pull the cage and balls away from the inner ring.

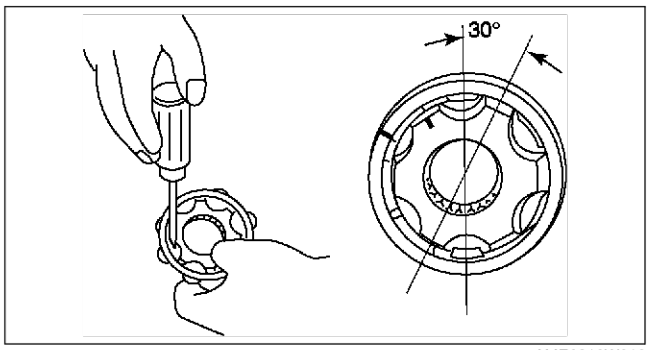

AME6316W019

Dynamic Damper Assembly Note

1. Install the dynamic damper as shown in the figure.

   Standard length
   L3: 281.7—287.7 mm {11.10—11.32 in}
   MZR-CD (RF Turbo): 288.7—294.7 mm {11.37—11.60 in}

2. Install the new boot band on the dynamic damper.

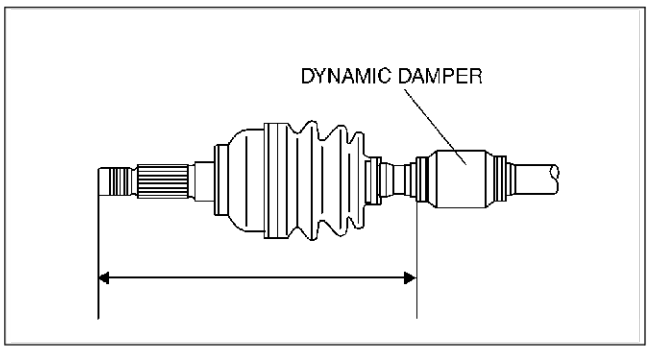

A6E6316W006

Boot Assembly Note

1. Fill the boot (wheel side) with the specified grease.

   Caution
   - **Do not touch grease with your hand. Apply it from the tube to prevent foreign matter from entering the boot.**

   Note
   - The wheel side and transaxle side boots are different.
   - Use the specified grease supplied in the boot kit.

   Grease amount
   L3: 130—150 g {4.59—5.29 oz}
   MZR-CD (RF Turbo): 160—180 g {5.65—6.35 oz}

M

2. With the splines of the shaft still wrapped in tape from the disassembly procedure, install the boot.
3. Remove the tape.

Cage, Inner Ring, Balls, Snap Ring Assembly Note

1. Align the marks and install the balls and cage on the inner ring in the direction shown in the figure.

   Caution
   - **Install the cage with the offset facing the snap ring groove. If incorrectly installed, the drive shaft may become disengaged.**

2. Install a new snap ring.

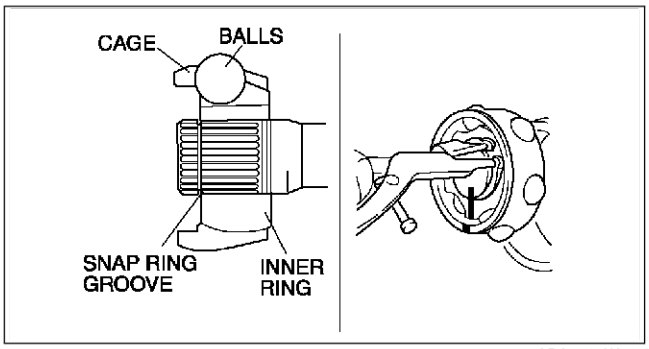

APA6316W019

Outer Ring, Clip Assembly Note

1. Fill the outer ring and boot (transaxle side) with the specified grease.

   Caution
   - **Do not touch grease with your hand. Apply it from the tube to prevent foreign matter from entering the boot.**

   Note
   - Use the specified grease supplied in the boot kit.

   Grease amount
   L3: 140—160 g {4.95—5.64 oz}
   MZR-CD (RF Turbo): 160—180 g {5.65—6.35 oz}

2. Align the marks, and install the outer ring on the shaft.
3. install a new clip.
4. Install the boot.
5. Set the drive shaft to the standard length.

Standard length

mm {in}

Engine	Left side	Right side
L3	644.7—654.7 {25.39—25.77}	594.7—604.7 {23.42—23.80}
MZR-CD (RF Turbo)	640.7—650.7 {25.23—25.61}	564.7—574.7 {22.24—22.62}

6. Release any trapped air from the boots by carefully lifting up the small end of each boot with a cloth wrapped screwdriver.

   Caution
   - **Be careful not to leak the grease.**
   - **Do not damage the boot.**

7. Verify that the drive shaft length is within the standard.

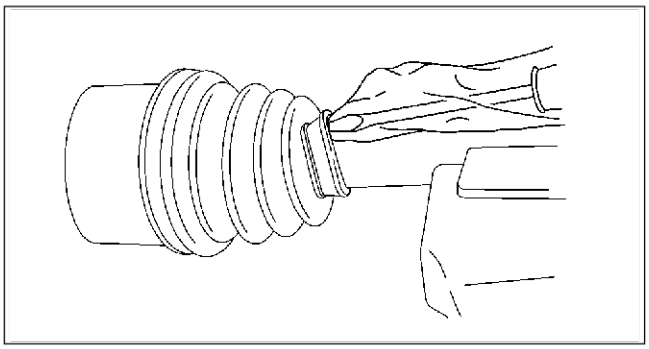
A6E6316W007

End Of Sie

STEERING SYSTEM

FEATURES

OUTLINE N-2
OUTLINE OF CONSTRUCTION N-2
FEATURES N-2
SPECIFICATIONS N-2
ENGINE SPEED SENSING POWER STEERING N-3
ENGINE SPEED SENSING POWER STEERING N-3
STRUCTURAL VIEW N-3

SERVICE

OUTLINE N-5
SUPPLEMENTAL SERVICE INFORMATION N-5
ENGINE SPEED SENSING POWER STEERING N-5
POWER STEERING FLUID INSPECTION N-5
STEERING GEAR AND LINKAGE REMOVAL/INSTALLATION N-8
POWER STEERING OIL PUMP (L3) REMOVAL/INSTALLATION N-12
POWER STEERING OIL PUMP (AJ) REMOVAL/INSTALLATION N-13
POWER STEERING OIL PUMP (MZR-CD (RF TURBO)) REMOVAL/INSTALLATION N-14
POWER STEERING OIL PUMP (L3) DISASSEMBLY/ASSEMBLY N-14
POWER STEERING OIL PUMP (AJ) DISASSEMBLY/ASSEMBLY N-18
POWER STEERING OIL PUMP (MZR-CD (RF TURBO)) DISASSEMBLY/ASSEMBLY ... N-20

OUTLINE

OUTLINE OF CONSTRUCTION

AME660201034W01

- The construction and operation of the steering system is essentially carried over from that of the previous MPV (LW), except for the following features. (See MPV Training Manual 3340-1*-99F.)
- The disassembly/assembly procedures for the steering gear and linkage of the newly equipped L3 engine, AJ engine and MZR-CD (RF Turbo) engine model are the same as the latest FS engine and GY engine model of the previous MPV.

End Of Sie

FEATURES

AME660201034W02

Improved Steering feel

- A check valve has been installed to the pressure pipe-side connector on the valve housing.
- The characteristics of the power steering oil pump have been optimized.

End Of Sie

SPECIFICATIONS

AME660201034W03

Item			Specification		
Engine			**L3**	**AJ**	**MZR-CD (RF Turbo)**
Steering wheel	Outer diameter (mm {in})		380 {15.0}		
	Lock-to-lock (turn)		3.3		
Steering gear	Type		Rack-and-pinion		
	Rack stroke (mm {in})		147.2 {5.8}		
Steering shaft and joint	Shaft type		Collapsible		
	Joint type		2-cross joint		
Power steering	Power assist type		Engine speed sensing		
	Power steering fluid	Type	ATF M-III or equivalent (e.g. Dexron®II)		
		Capacity* (approximate quantity) (L {US qt, Imp qt})	L.H.D.: 1.09 {1.15, 0.96} R.H.D.: 1.04 {1.10, 0.92}	L.H.D.: 1.05 {1.11, 0.92} R.H.D.: 1.00 {1.06, 0.88}	L.H.D.: 0.96 {1.01, 0.84} R.H.D.: 0.90 {0.95, 0.79}

* : When reservoir tank is at maximum volume

Bold frames: New specifications

End Of Sie

ENGINE SPEED SENSING POWER STEERING

ENGINE SPEED SENSING POWER STEERING

AME661401036W01

- The construction and operation of the steering system is essentially carried over from that of the previous MPV (LW), however, the following has been changed:
  — A check valve has been installed to the pressure pipe-side connector on the valve housing. Due to this, kickback has been reduced, which improves steering feel.

End Of Sec

STRUCTURAL VIEW

AME661401036W02

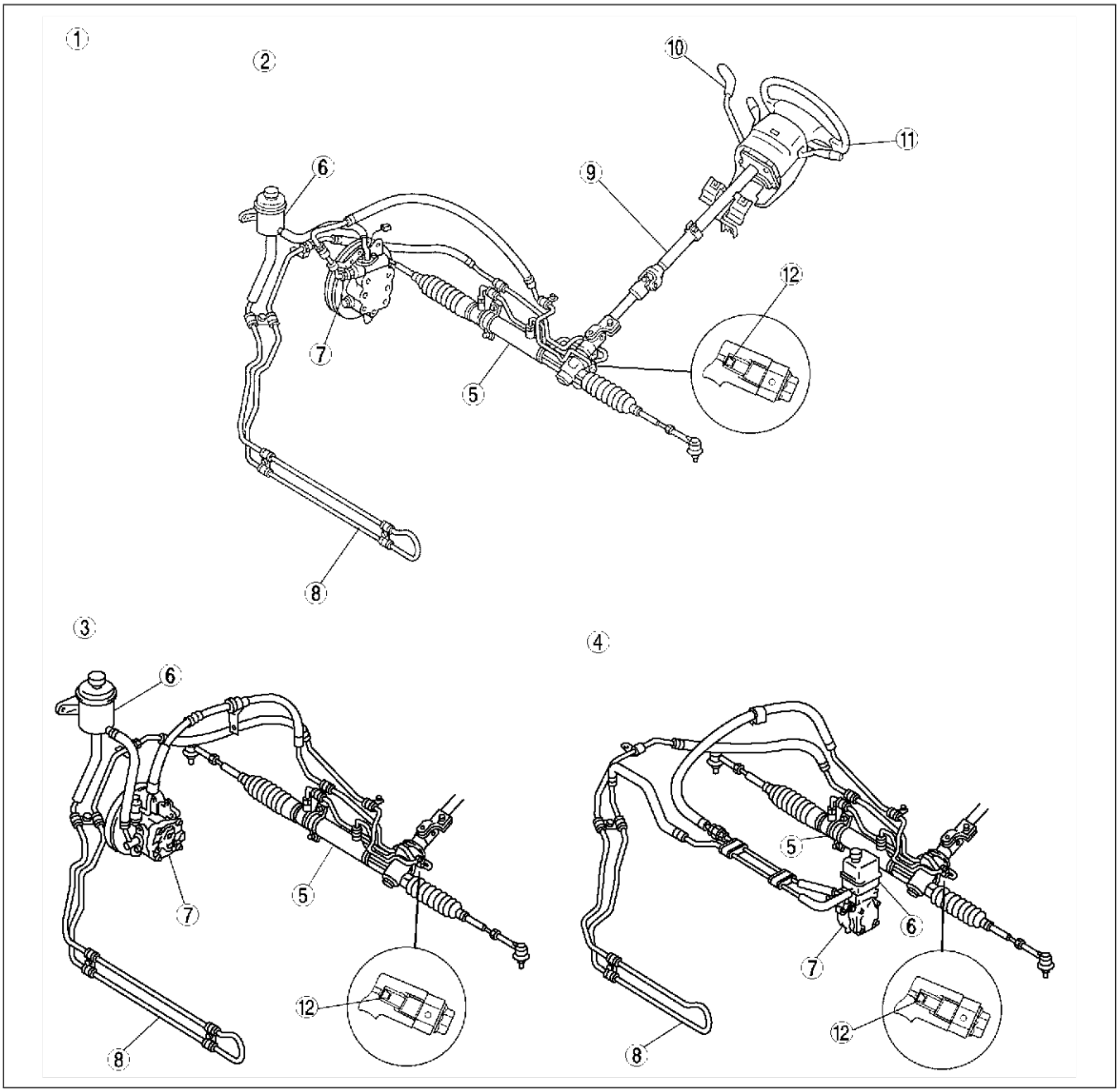

AME6613W008

1	L.H.D.
2	AJ engine
3	L3 engine
4	MZR-CD (RF Turbo) engine
5	Steering gear
6	Fluid reservoir

7	Power steering oil pump
8	Cooling pipe
9	Steering shaft
10	Selector lever component (with ATX)
11	Steering wheel
12	Check valve

N

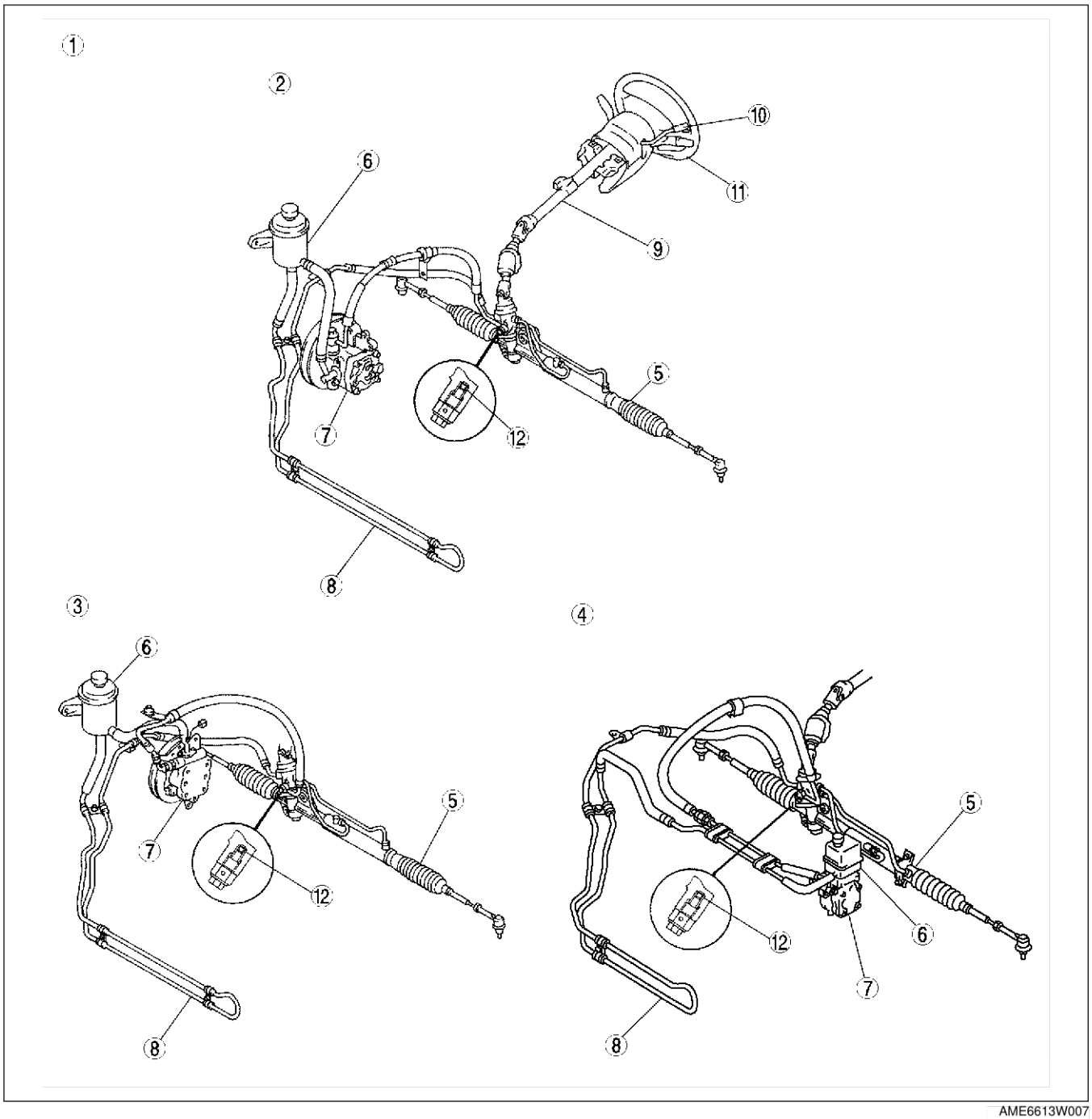

AME6613W007

1	R.H.D.
2	L3 engine
3	AJ engine
4	MZR-CD (RF Turbo) engine
5	Steering gear
6	Fluid reservoir

7	Power steering oil pump
8	Cooling pipe
9	Steering shaft
10	Selector lever component (with ATX)
11	Steering wheel
12	Check valve

End Of Sie

OUTLINE

SUPPLEMENTAL SERVICE INFORMATION

AME660201034W04

- The following changes have been made since publication of the MPV Workshop Manual (1666-1*-99F).

Steering gear and linkage (L3)
- Removal/installation procedure has been added.

Steering gear and linkage (AJ)
- Removal/installation procedure has been added.

Steering gear and linkage (MZR-CD (RF Turbo))
- Removal/installation procedure has been added.

Power steering oil pump (L3)
- Removal/installation procedure has been added.
- Disassembly/assembly procedure has been added.

Power steering oil pump (AJ)
- Removal/installation procedure has been added.
- Disassembly/assembly procedure has been added.

Power steering oil pump (MZR-CD (RF Turbo))
- Removal/installation procedure has been added.
- Disassembly/assembly procedure has been added.

End Of Sub

ENGINE SPEED SENSING POWER STEERING

POWER STEERING FLUID INSPECTION

AME661432040W01

Fluid Level Inspection

1. Inspect the power steering fluid level.
   - Add fluid to the specified level as necessary.

Fluid specification
ATF M-III or equivalent (e.g. Dexron®II)

Fluid Leakage Inspection

Caution
- **If the steering wheel is kept in the fully turned position for more than 5 seconds, the fluid temperature will rise excessively and adversely affect the oil pump.**

1. Start the engine and let it idle.
2. Turn the steering wheel fully to the left and right to apply fluid pressure.

Note
- The points where fluid leakage may occur are indicated in the figure.

3. Inspect for fluid leakage.
   - If fluid leakage is found, replace the related pipe or hose.

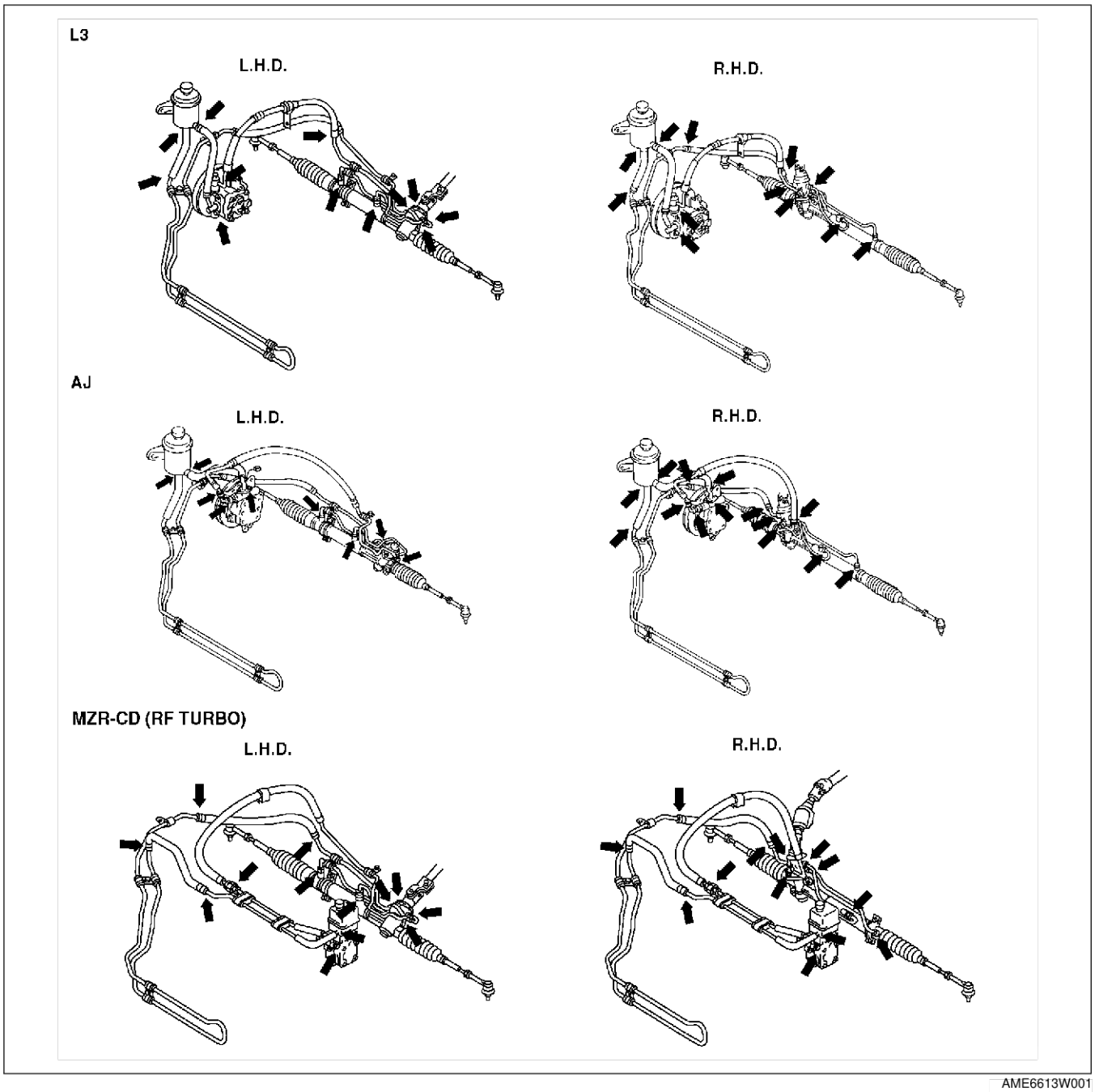

AME6613W001

Fluid Pressure Inspection

1. Assemble the **SSTs** as shown in the figure.

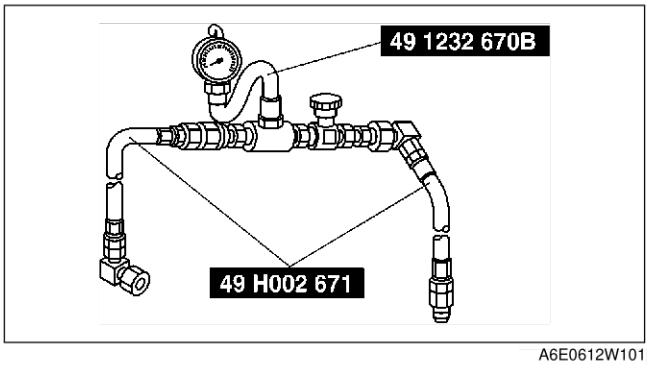

A6E0612W101

2. Disconnect the pressure pipe from the oil pump, and connect the **SSTs**.

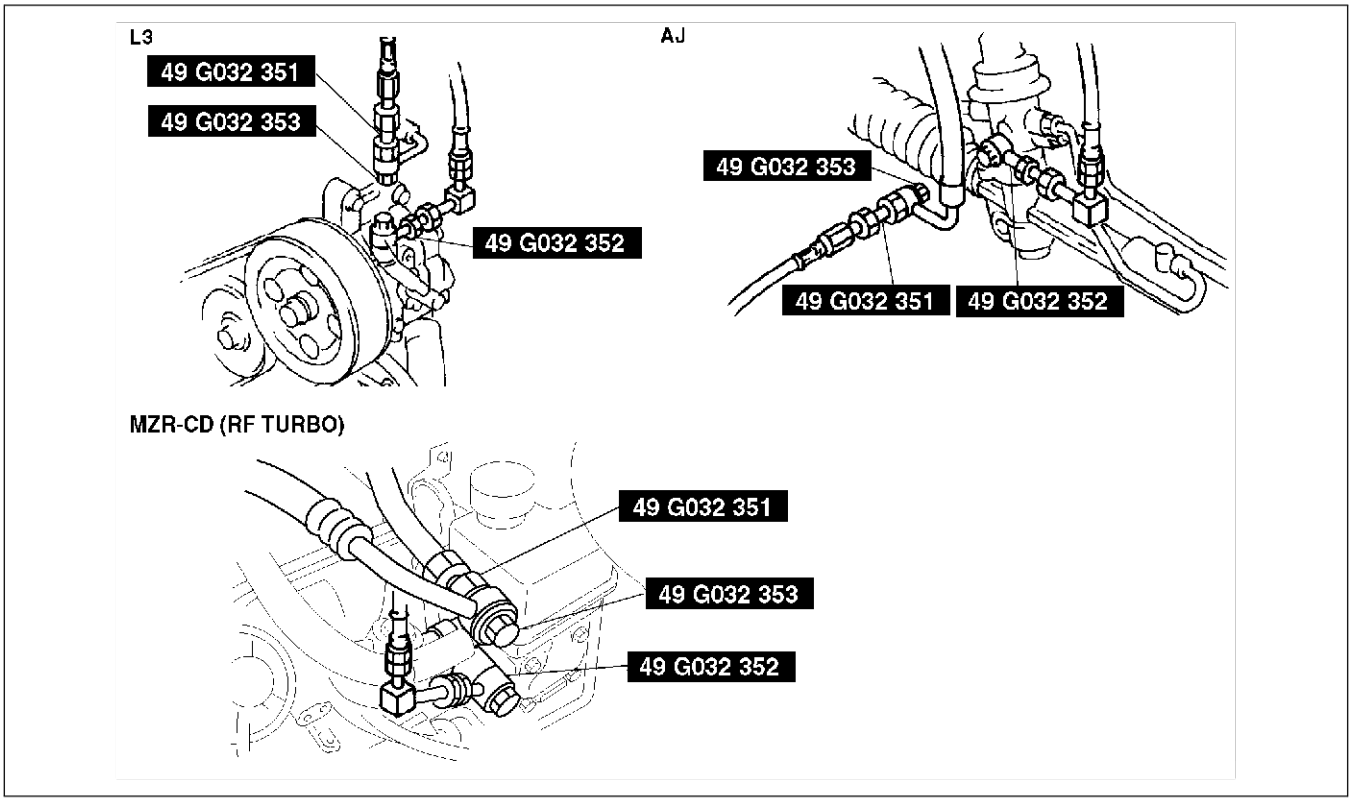

AME6613W002

Tightening torque
29.4—44.1 N·m {3.0—4.4 kgf·m, 22—32 ft·lbf}

3. Bleed the air from the system.
4. Open the gauge valve fully.
5. Start the engine and turn the steering wheel fully left and right to raise the fluid temperature to **50—60 °C {122—140 °F}**.
6. Close the gauge valve completely.
7. Increase the engine speed to **1,000—1,500 rpm** and measure the fluid pressure generated by the oil pump.
   - If the pressure is not within the specification, repair or replace the oil pump component.

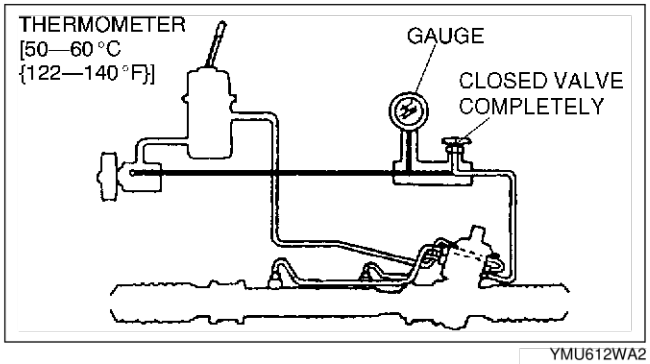

YMU612WA2

Caution
- **If the valve is left closed for more than 5 seconds, the fluid temperature will rise excessively and adversely affect the oil pump.**

Oil pump fluid pressure

(MPa {kgf/cm^2, psi})

Engine	Oil pump fluid pressure
L3	8.23—8.92 {84.0—90.9, 1,200—1,290}
AJ	
MZR-CD (RF Turbo)	8.64—9.13 {88.2—93.1, 1,260—1,320}

N

8. Open the gauge valve fully and increase the engine speed to **1,000—1,500 rpm**.
9. Turn the steering wheel fully to the left and right, then measure the fluid pressure generated at the gear housing.
   - If the pressure is not within the specification, repair or replace the steering gear component.

Caution
- **If the steering wheel is kept in the fully turned position for more than 5 seconds, the fluid temperature will rise excessively and adversely affect the oil pump.**

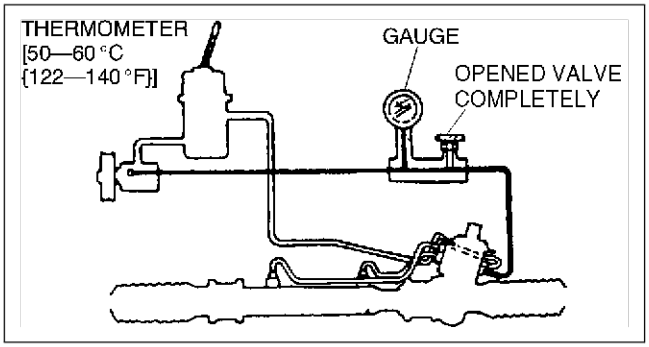

YMU612WA3

Gear housing fluid pressure

(MPa {kgf/cm^2, psi})

Engine	Oil pump fluid pressure
L3	8.23—8.92 {84.0—90.9, 1200—1290}
AJ	
MZR-CD (RF Turbo)	8.64—9.13 {88.2—93.1, 1260—1320}

10. Remove the **SSTs**. Install and tighten the pressure pipe to the specified torque.

Tightening torque
29.4—44.1 N·m {3.0—4.4 kgf·m, 22—32 ft·lbf}

11. Bleed the air from the system.

End Of Sie

STEERING GEAR AND LINKAGE REMOVAL/INSTALLATION

AME661432960W05

Caution
- **Performing the following procedures without first removing the ABS wheel-speed sensor may possibly cause an open circuit in the harness if it is pulled by mistake. Before performing the following procedures, remove the ABS wheel-speed sensor (axle side) and fix it to an appropriate place where the sensor will not be pulled by mistake while servicing the vehicle.**

1. Remove the extension bar and change control rod. (L3 MTX only) (See J1–4 MANUAL TRANSAXLE REMOVAL/INSTALLATION.)
2. Remove in the order indicated in the table.
3. Install in the reverse order of removal.
4. After installation, inspect the toe-in. (See R–3 FRONT WHEEL ALIGNMENT.)

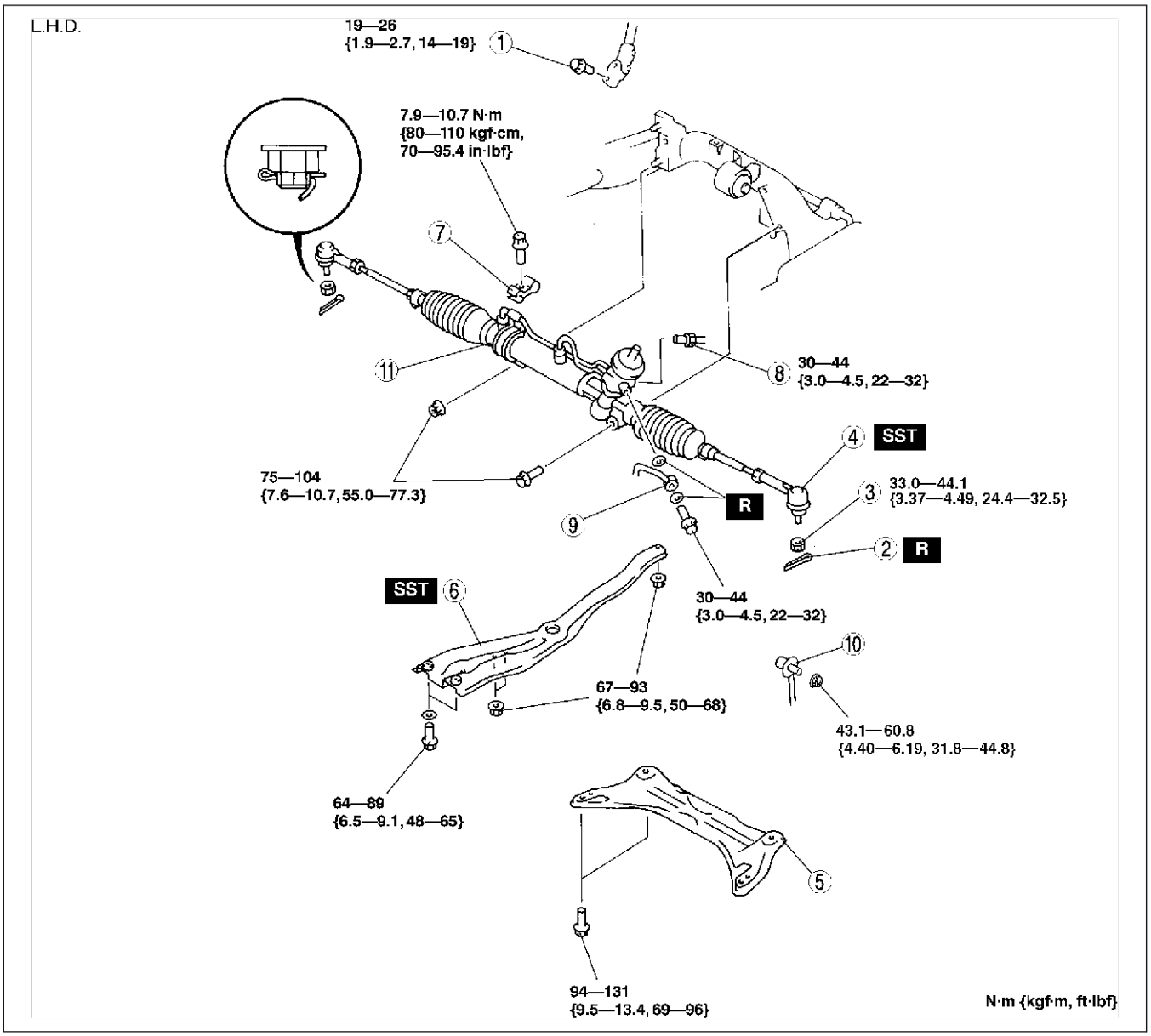

AME6613W003

1	Bolt (intermediate shaft) (See N–10 Bolt (Intermediate Shaft) Removal Note) (See N–12 Bolt (Intermediate Shaft) Installation Note)
2	Cotter pin
3	Nut
4	Tie-rod end ball joint (See N–11 Tie-rod End Ball Joint Removal Note)
5	Transverse member
6	Engine mount member (See AJ: B2–31 Engine Mount Member Removal Note) (See L3: B3–48 Engine Mount Member Removal Note) (See MZR-CD (RF Turbo): B4–35 Engine Mount Member Removal Note)

7	Clamp
8	Return pipe
9	Pressure pipe
10	Stabilizer control link
11	Steering gear and linkage (See N–11 Steering Gear and Linkage Removal Note) (See N–11 Steering Gear and Linkage Installation Note)

N

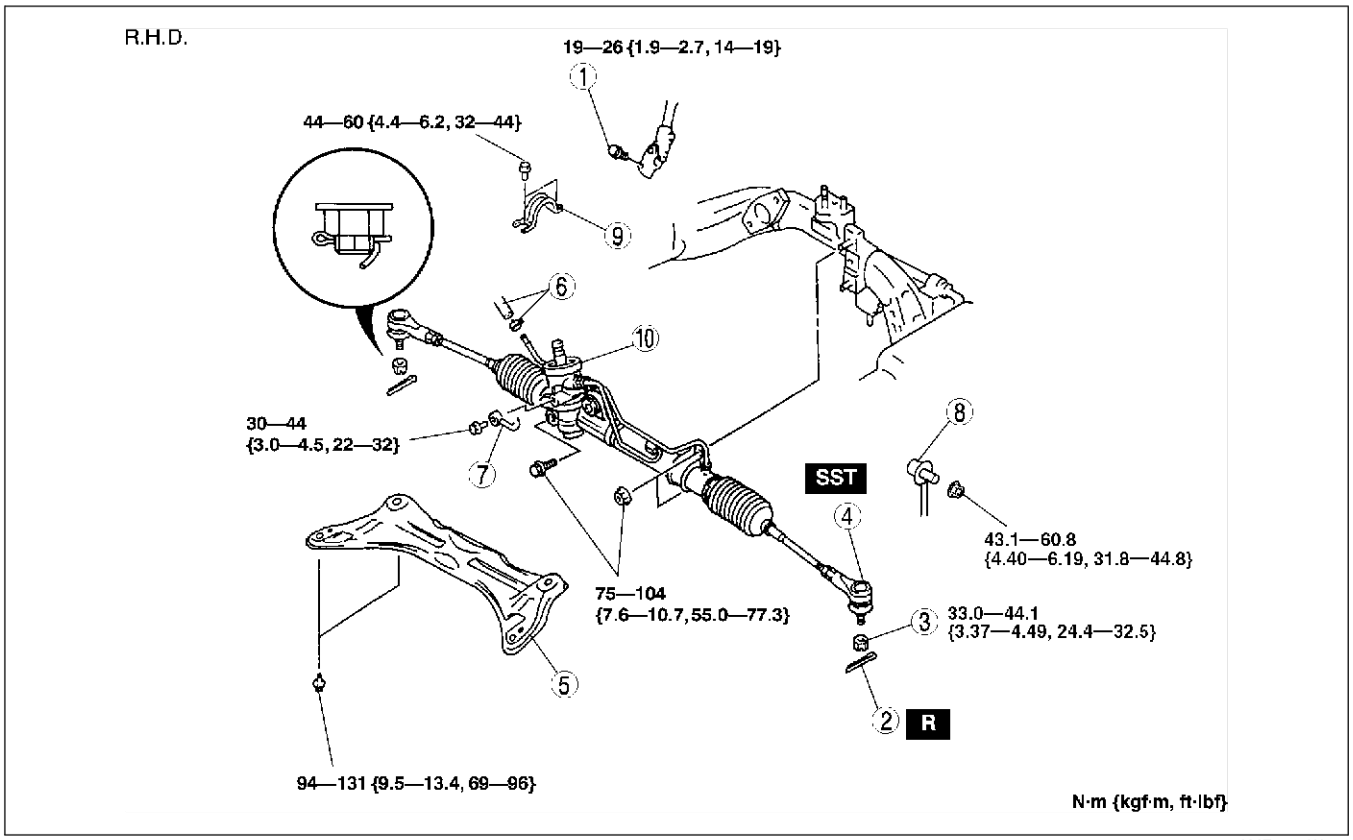

AME6613W004

1	Bolt (intermediate shaft) (See N–10 Bolt (Intermediate Shaft) Removal Note) (See N–12 Bolt (Intermediate Shaft) Installation Note)
2	Cotter pin
3	Nut
4	Tie-rod end ball joint (See N–11 Tie-rod End Ball Joint Removal Note)
5	Transverse member

6	Return pipe
7	Pressure pipe
8	Stabilizer control link
9	Stabilizer bracket
10	Steering gear and linkage (See N–11 Steering Gear and Linkage Removal Note) (See N–11 Steering Gear and Linkage Installation Note)

Bolt (Intermediate Shaft) Removal Note

1. Mark the pinion shaft and gear housing for proper installation.

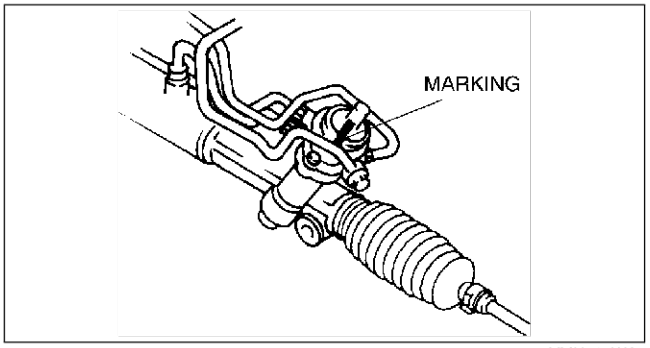

YMU612WA9

Tie-rod End Ball Joint Removal Note

1. Remove the tie rod-nut.
2. Separate the tie-rod end from the steering knuckle using the **SSTs**.

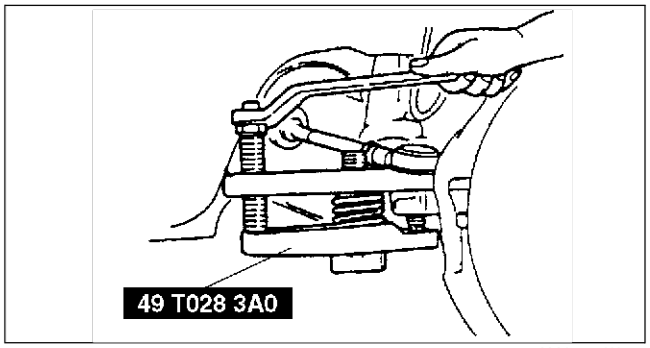

AMJ6613W106

Steering Gear and Linkage Removal Note

Caution

- **Excessively loosening the crossmember nuts may possibly cause the crossmember to fall off. The crossmember nuts must remain threaded on the studs when loosening.**

L.H.D.

1. Loosen the crossmember nuts and lower the crossmember.
2. Remove the steering gear and linkage by pulling it from the left side.

R.H.D.

1. Loosen the right-side crossmember nuts, and lower the crossmember.
2. Remove the steering gear and linkage by pulling it from the right side.

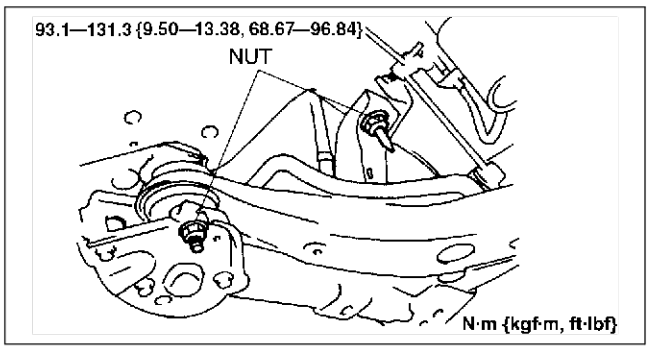

AME6613W009

Steering Gear and Linkage Installation Note

1. Loosely tighten nuts 3, 4 and bolt 2.
2. Tighten the mounting bracket nuts and bolts to the specified torque in the order shown.

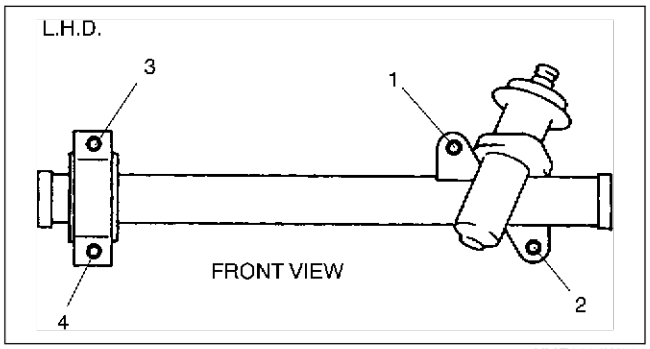

XME6614W011

N

3. Tighten the crossmember nuts.

Tightening torque
94—131 N·m {9.5—13.4 kgf·m, 69—96 ft·lbf}

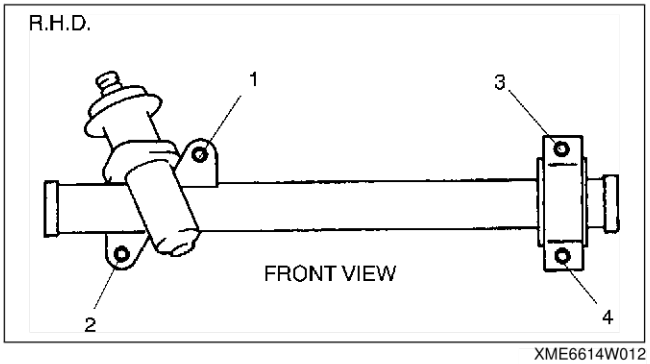

XME6614W012

Bolt (Intermediate Shaft) Installation Note
1. Align the marks and install the intermediate shaft and bolt.

End Of Sie

POWER STEERING OIL PUMP (L3) REMOVAL/INSTALLATION

AME661432650W11

1. Remove in the order indicated in the table.
2. Install in the reverse order of removal.

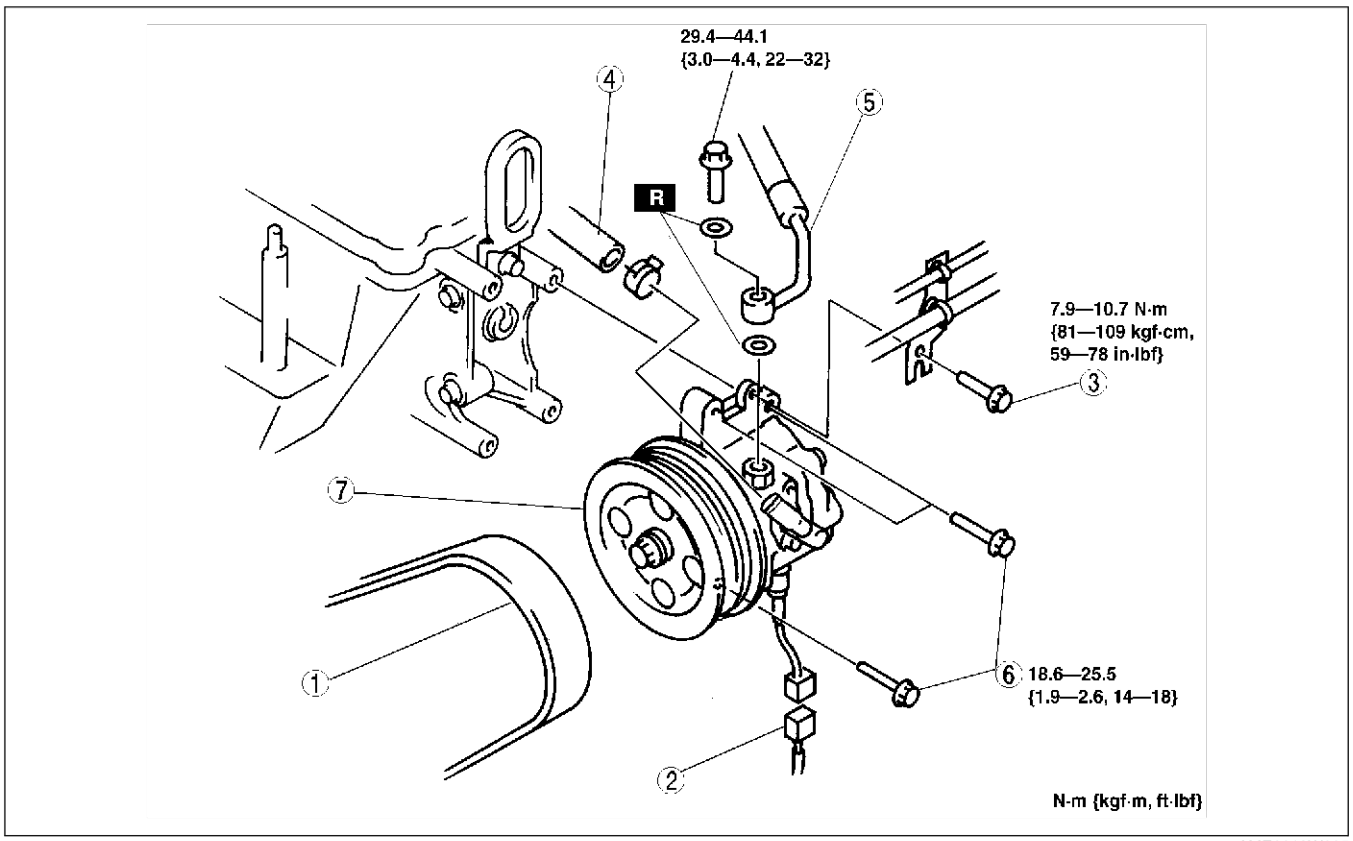

AME6613W005

1	Drive belt
2	Pressure switch connector
3	Bolt
4	Suction hose

5	Pressure pipe
6	Bolt
7	Power steering oil pump

End Of Sie

POWER STEERING OIL PUMP (AJ) REMOVAL/INSTALLATION

AME661432650W10

1. Remove in the order indicated in the table.
2. Remove the No.3 engine joint bracket. (See B2–29 ENGINE REMOVAL/INSTALLATION.)
3. Install in the reverse order of removal.
4. Adjust the No.3 joint bracket. (See B2–29 ENGINE REMOVAL/INSTALLATION.)

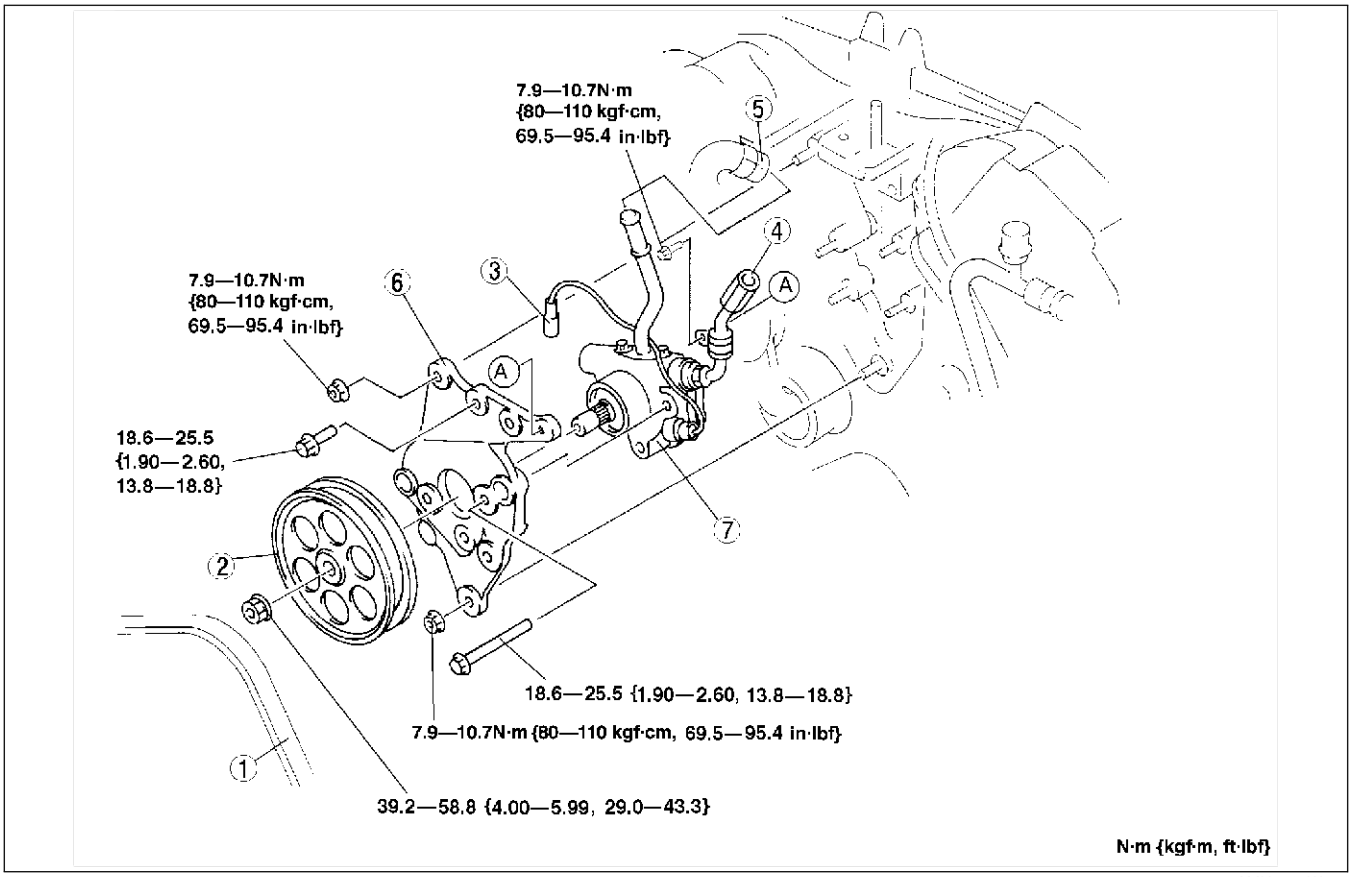

AMU0612W006

1	Drive belt
2	Power steering oil pump pulley
3	Pressure switch connector
4	Pressure pipe

5	Return hose
6	Power steering oil pump cover
7	Power steering oil pump

End Of Ste

N

POWER STEERING OIL PUMP (MZR-CD (RF TURBO)) REMOVAL/INSTALLATION

AME661432650W08

1. Remove the fresh air duct.
2. Remove the battery.
3. Remove in the order indicated in the table.
4. Install in the reverse order of removal.

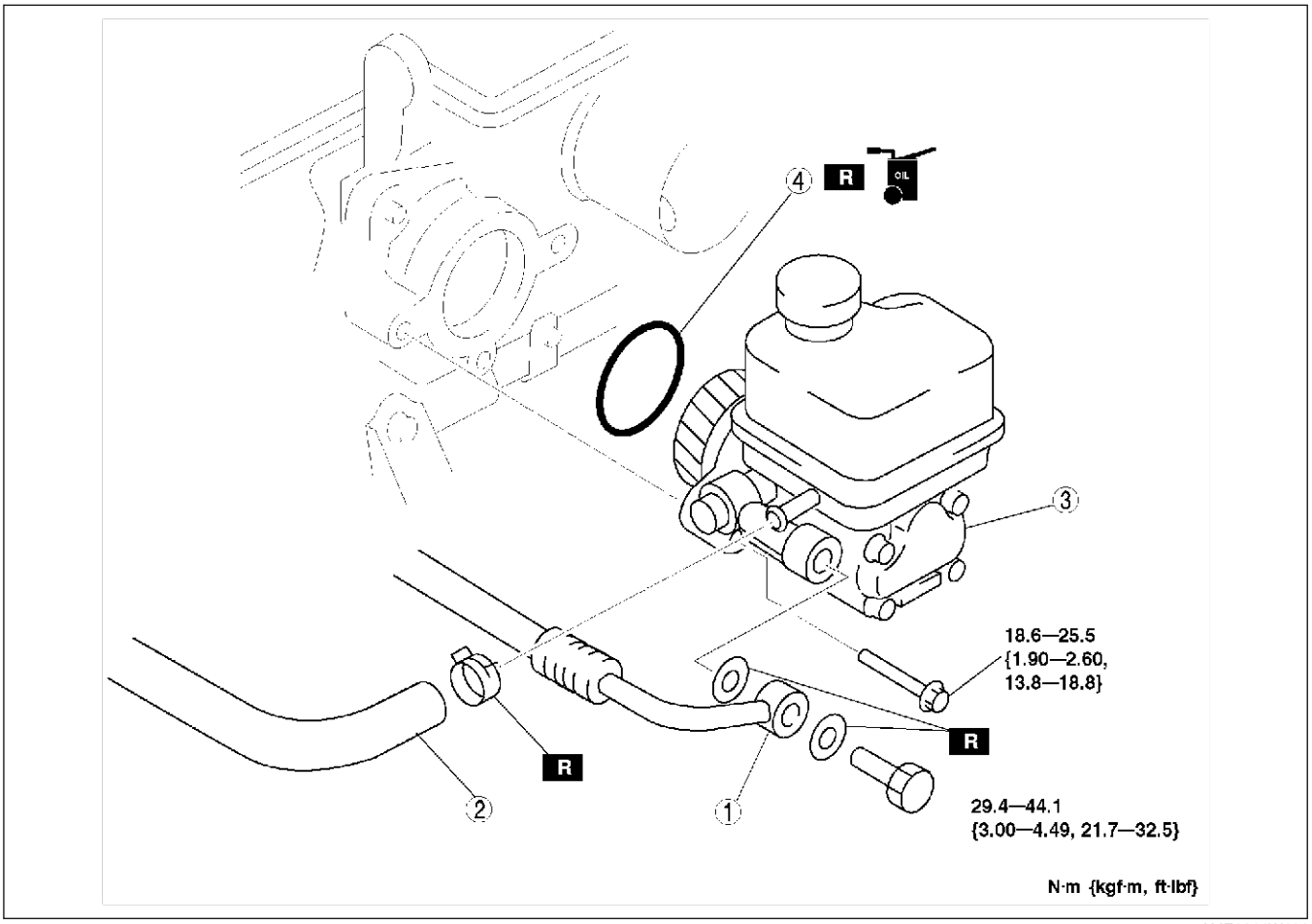

AME6614W101

1	Pressure pipe	3	Power steering oil pump
2	Return hose	4	O-ring

End Of Sie

POWER STEERING OIL PUMP (L3) DISASSEMBLY/ASSEMBLY

AME661432650W12

Note

- The following procedure is for replacement of the O-ring and oil seal only. Replace the pump component if other repairs are necessary.

1. Disassemble in the order indicated in the table.
2. Assemble in the reverse order of disassembly.

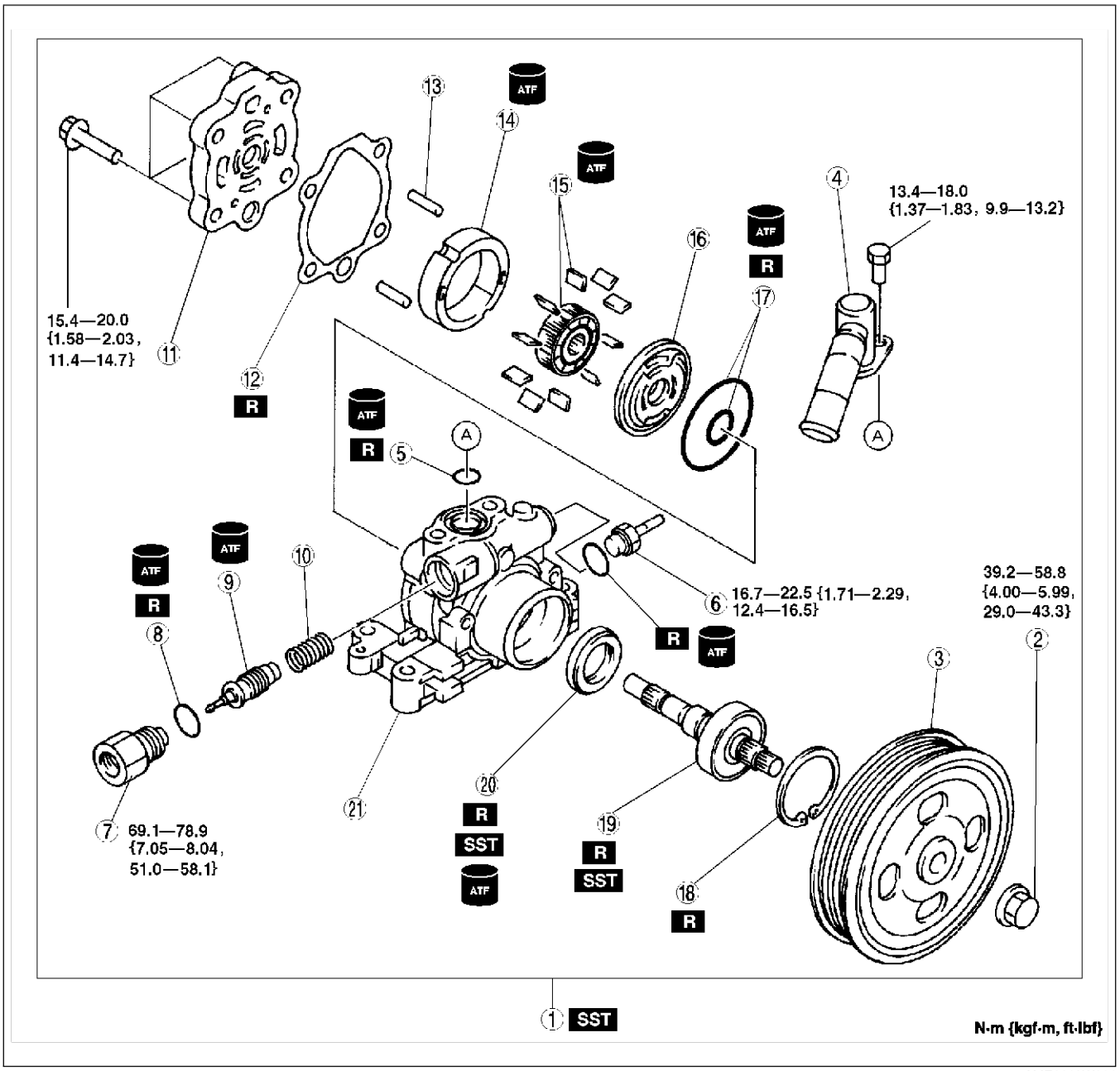

AME6613W006

1	Power steering oil pump component (See N–16 Power Steering Oil Pump Component Disassembly Note)
2	Nut
3	Power steering oil pump pulley
4	Suction pipe
5	O-rings
6	Pressure switch component
7	Connector
8	O-ring
9	Control valve
10	Spring
11	Rear pump body (See N–17 Rear Pump Body Assembly Note)

12	Gasket
13	Pin
14	Cam ring (See N–17 Cam Ring Assembly Note)
15	Rotor, Vane (See N–17 Rotor, Vane Assembly Note)
16	Side plate
17	O-ring
18	Snap ring
19	Shaft component (See N–16 Shaft Component Disassembly Note) (See N–16 Shaft Component Assembly Note)
20	Oil seal (See N–16 Oil Seal Assembly Note)
21	Front pump body

N

Power Steering Oil Pump Component Disassembly Note

1. Secure the power pressure oil pump using the **SST**.

Caution

- **Use the SST to prevent damage to the pump when securing it in a vise.**

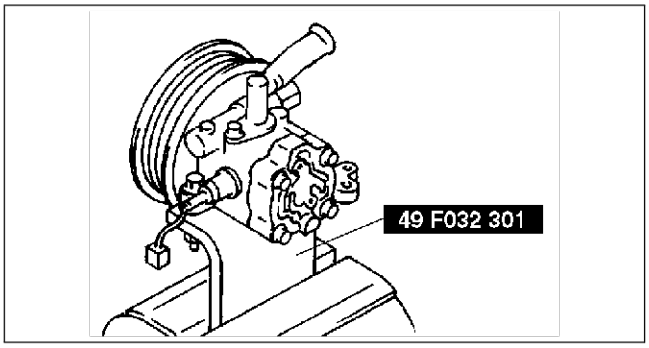

AMJ6613W116

Shaft Component Disassembly Note

1. Remove the shaft component using a press.

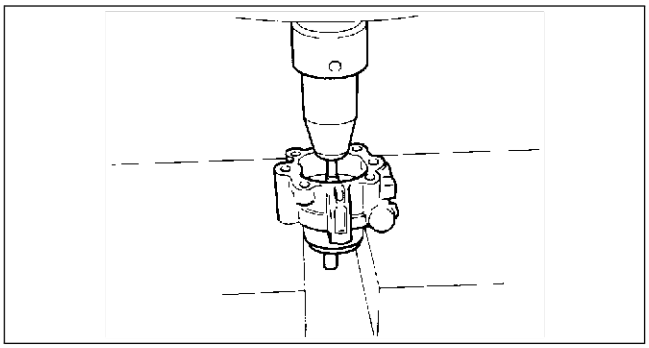

AMJ6613W117

Oil Seal Assembly Note

1. Install the oil seal in the front pump body using the **SST** and plastic hammer.

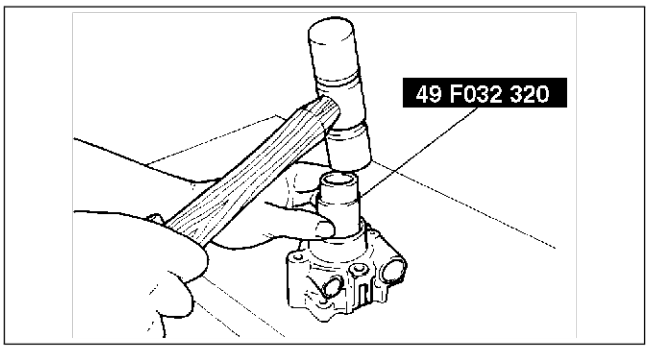

AMJ6613W118

Shaft Component Assembly Note

1. Install the shaft component in the front pump body using the **SST** and a press.

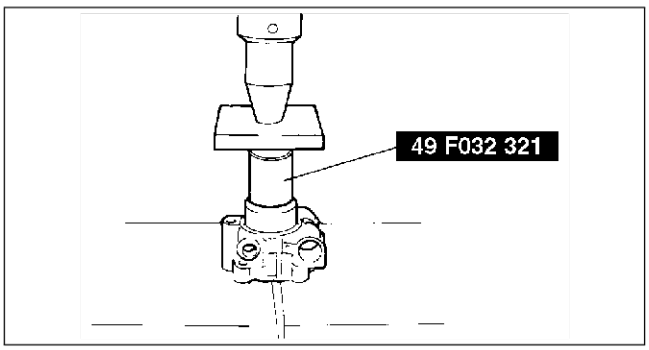

AMJ6613W119

Rotor, Vane Assembly Note

1. Place the vanes in the rotor with the rounded edges contacting the cam.

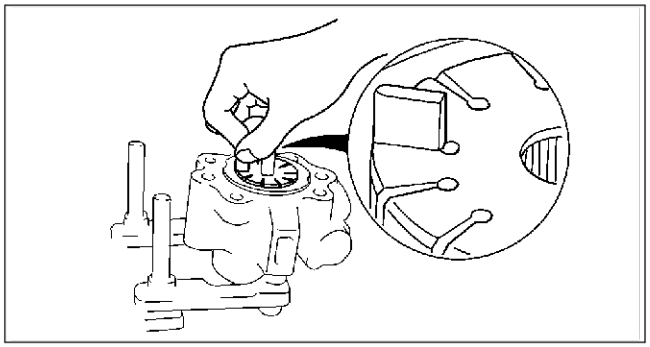

A6E6316W013

Cam Ring Assembly Note

1. Install the cam ring in the front pump body with the mark facing upward.

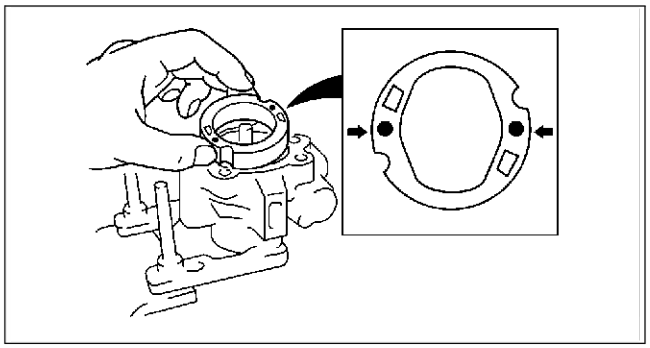

A6E6316W014

Rear Pump Body Assembly Note

1. After installing the rear body, manually turn the shaft to verify that it rotates smoothly.

End Of Sta

N

POWER STEERING OIL PUMP (AJ) DISASSEMBLY/ASSEMBLY

AME661432650W05

Note

- The following procedure is for replacement of the O-ring and oil seal only. Replace the pump component if other repairs are necessary.

1. Disassemble in the order indicated in the table.
2. Assemble in the reverse order of disassembly.

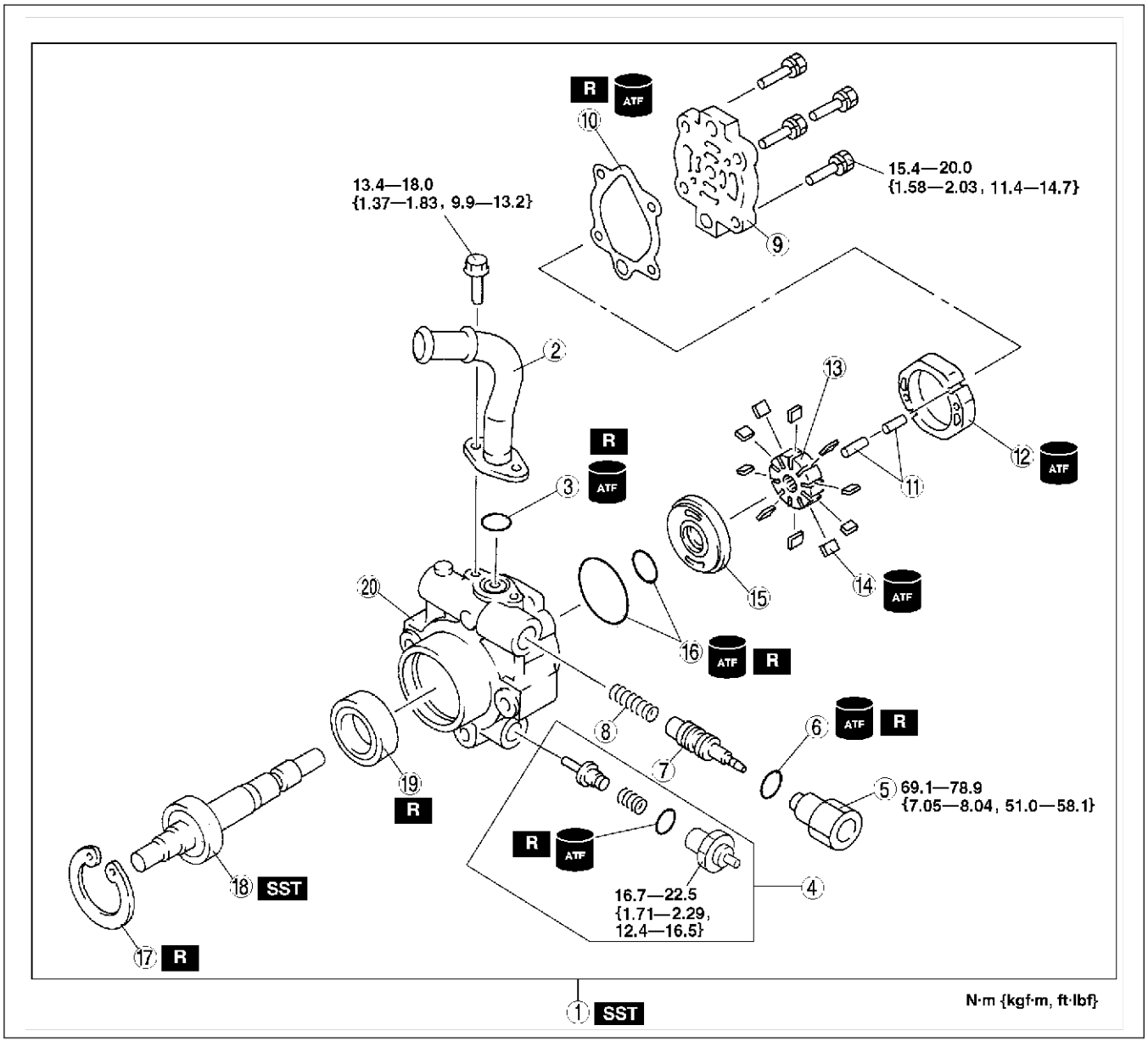

AMU0612W007

1	Power steering oil pump component (See N–19 Power Steering Oil Pump Component Disassembly Note)
2	Suction pipe
3	O-ring
4	Pressure switch component
5	Connector
6	O-ring
7	Control valve
8	Spring
9	Rear pump body (See N–19 Rear Pump Body Assembly Note)
10	Gasket

11	Pin
12	Cam ring (See N–19 Cam Ring Assembly Note)
13	Rotor
14	Vane (See N–19 Vane Assembly Note)
15	Side plate
16	O-ring
17	Snap ring
18	Shaft component (See N–19 Shaft Component Assembly Note)
19	Oil seal
20	Front pump body

Power Steering Oil Pump Component Disassembly Note

1. Secure the power pressure oil pump using the **SST**.

Caution

- **Use the SST to prevent damage to the pump when securing it in a vise.**

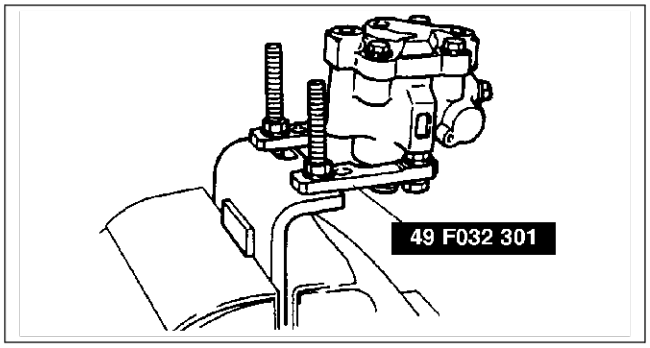

X3U612WBL

Shaft Component Assembly Note

1. Assemble the shaft component using the **SST**.

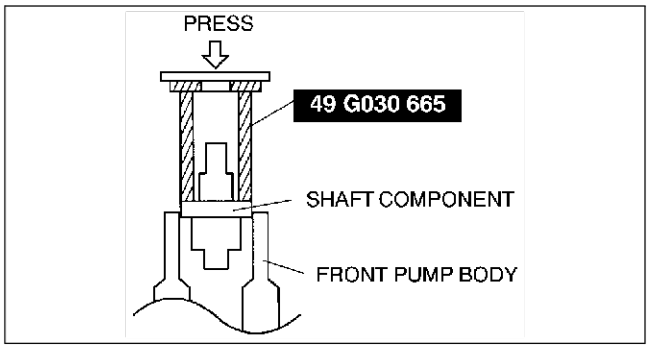

ZMU0612W146

Vane Assembly Note

1. Place the vanes in the rotor with the rounded edges contacting the cam.

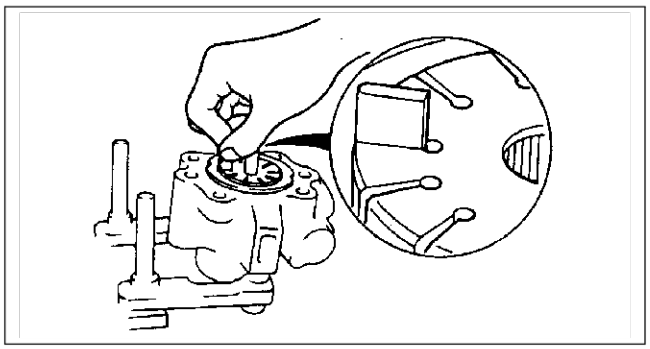

X3U612WBN

Cam Ring Assembly Note

1. Install the cam ring in the front pump body with the mark facing upward.

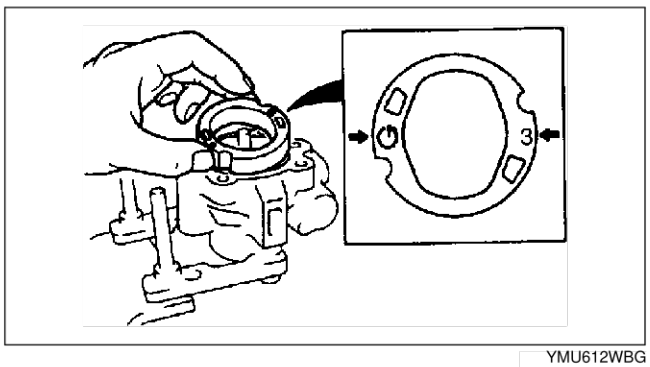

YMU612WBG

Rear Pump Body Assembly Note

1. After installing the rear body, manually turn the shaft to verify that it rotates smoothly.

End Of Sie

N

POWER STEERING OIL PUMP (MZR-CD (RF TURBO)) DISASSEMBLY/ASSEMBLY

AME661432650W09

Note

- The following procedure is for replacement of the O-ring and oil seal only. Replace the pump component if other repairs are necessary.

1. Disassemble in the order indicated in the table.
2. Assemble in the reverse order of disassembly.

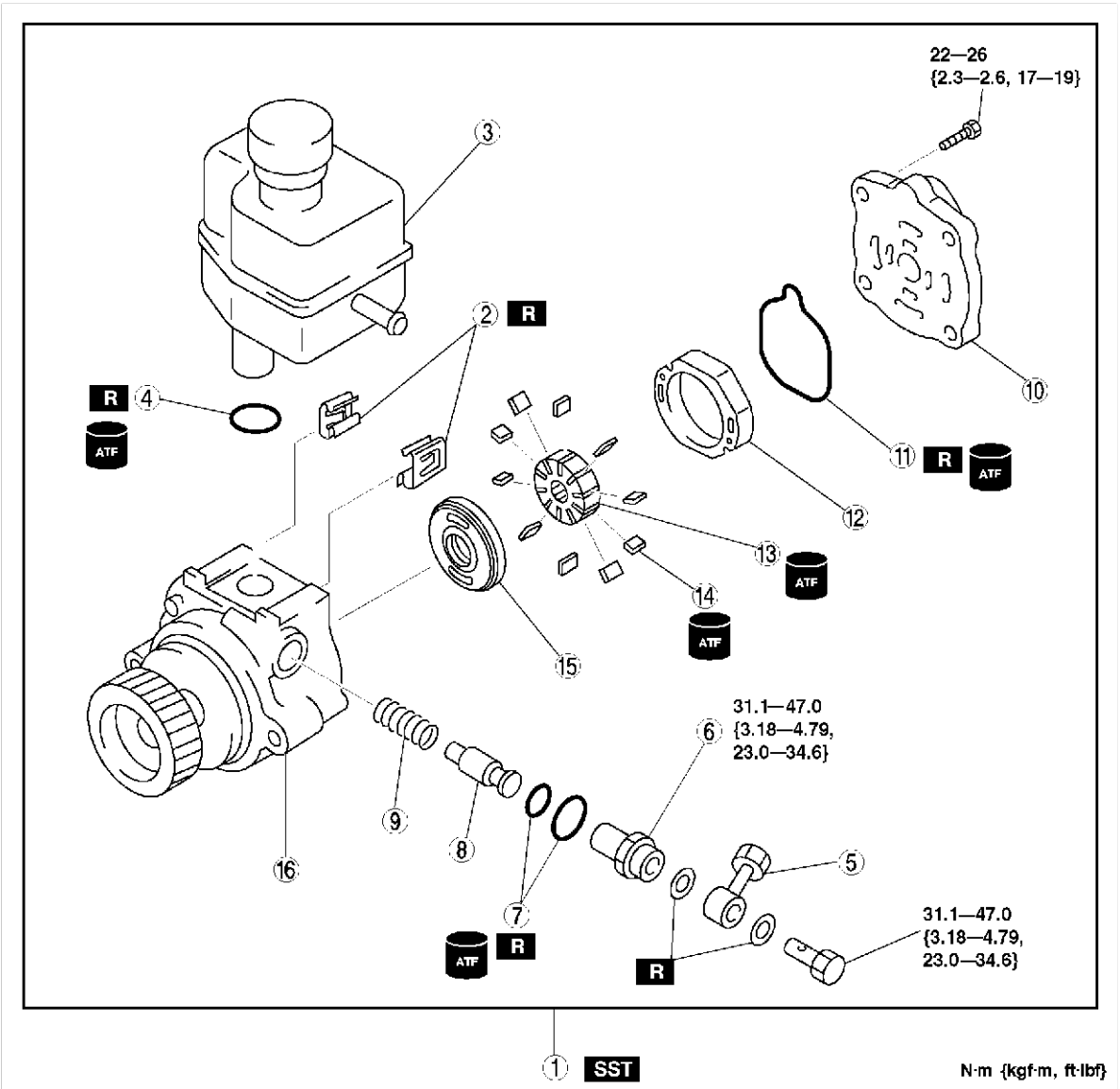

AME6614W102

1	Power steering oil pump component (See N–21 Power Steering Oil Pump Component Disassembly Note)
2	Clip (See N–21 Clip Disassembly Note) (See N–22 Clip Assembly Note)
3	Reservoir tank
4	O-ring
5	Joint
6	Connector
7	O-ring
8	Control valve

9	Spring
10	Rear pump body (See N–22 Rear Pump Body Assembly Note)
11	Gasket
12	Cam ring (See N–22 Cam Ring Assembly Note)
13	Rotor
14	Vane (See N–21 Vane Assembly Note)
15	Side plate
16	Power steering oil pump

Power Steering Oil Pump Component Disassembly Note

1. Secure the power pressure oil pump using the **SST**.

Caution

- **Use the SST to prevent damage to the pump when securing it in a vise.**

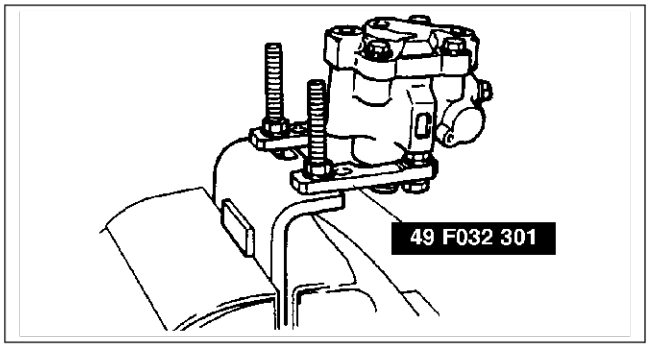

X3U612WBL

Clip Disassembly Note

1. Lift up the clip tab using a flathead screwdriver.
2. Remove the clip by pushing it with a flathead screwdriver and a hammer as shown in the figure.

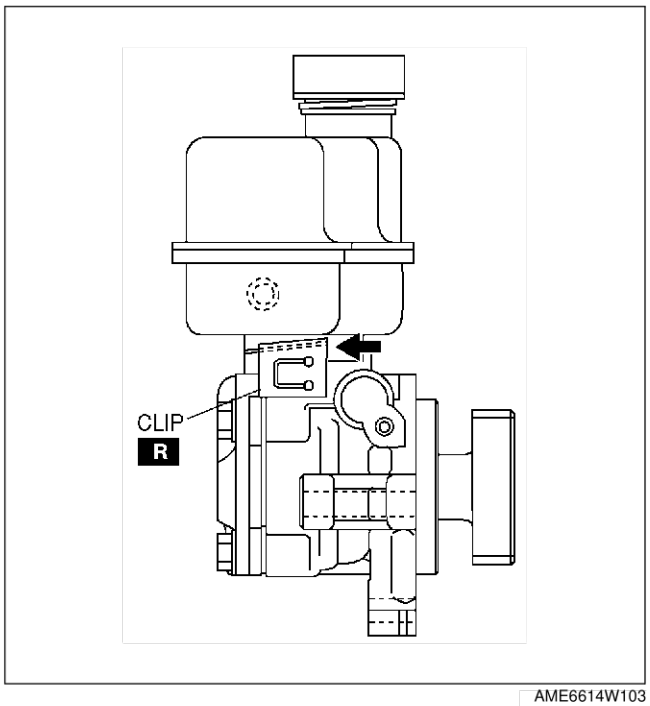

AME6614W103

Vane Assembly Note

1. Place the vanes in the rotor with the rounded edges contacting the cam.

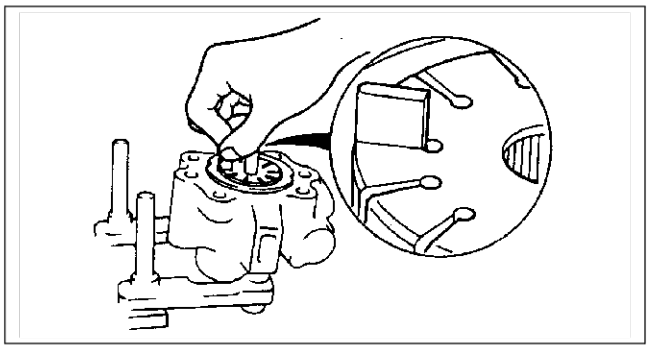

X3U612WBN

N

Cam Ring Assembly Note

1. Install the cam ring in the front pump body with the mark facing upward.

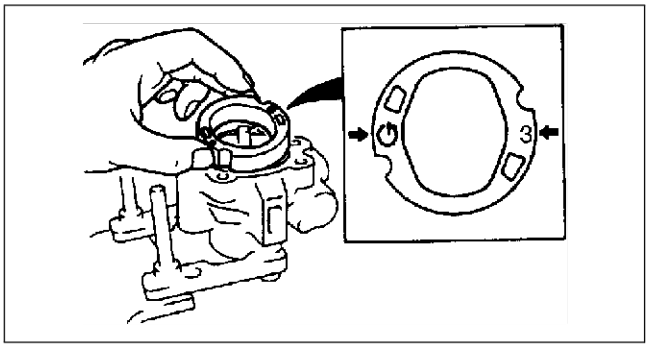

YMU612WBG

Rear Pump Body Assembly Note

1. After installing the rear body, manually turn the shaft to verify that it rotates smoothly.

Clip Assembly Note

1. Push the clip slowly to the direction shown in the figure.
2. Confirm that the clip tab is securely fastened.

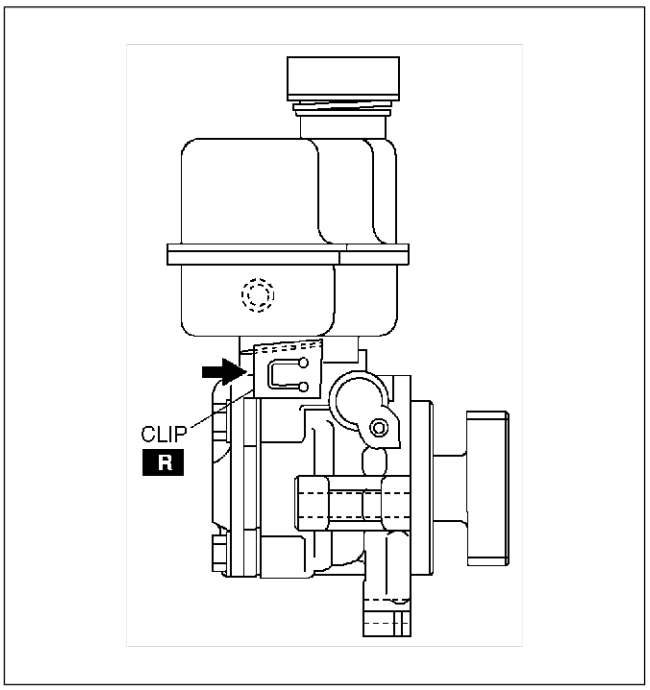

AME6614W104

End Of Sec

BRAKING SYSTEM

FEATURES

OUTLINE P-2
OUTLINE OF CONSTRUCTION P-2
FEATURES P-2
SPECIFICATIONS P-2
STRUCTURAL VIEW P-3
TRACTION CONTROL SYSTEM P-4
TCS OUTLINE P-4
TCS STRUCTURAL VIEW P-4
TCS SYSTEM DIAGRAM P-5
ON-BOARD DIAGNOSTIC (ABS/TCS) P-6
OUTLINE P-6

SERVICE

OUTLINE P-8
SUPPLEMENTAL SERVICE INFORMATION P-8
GENERAL PROCEDURES P-8
PRECAUTION (BRAKES) P-8
CONVENTIONAL BRAKE SYSTEM P-9
MASTER CYLINDER REMOVAL/INSTALLATION P-9
POWER BRAKE UNIT INSPECTION P-10
POWER BRAKE UNIT REMOVAL/INSTALLATION P-10
VACUUM PUMP INSPECTION (MZR-CD (RF Turbo)) P-11
VACUUM PUMP REMOVAL/INSTALLATION (MZR-CD (RF Turbo)) P-12
VACUUM SWITCH INSPECTION (MZR-CD (RF Turbo)) P-12
VACUUM SWITCH REMOVAL/INSTALLATION (MZR-CD (RF Turbo)) P-13
BRAKE PIPE JOINT REPLACEMENT P-13
PARKING BRAKE SYSTEM P-14
PARKING BRAKE (LEVER TYPE) INSPECTION P-14
ANTILOCK BRAKE SYSTEM P-15
FRONT ABS WHEEL-SPEED SENSOR REMOVAL/INSTALLATION P-15
TRACTION CONTROL SYSTEM P-16
ABS/TCS HU/CM REMOVAL/INSTALLATION P-16
ABS/TCS HU/CM INSPECTION P-18
TCS OFF SWITCH REMOVAL/INSTALLATION P-21
TCS OFF SWITCH INSPECTION P-22
ON-BOARD DIAGNOSTIC (ABS/TCS) P-23
ABS/TCS SYSTEM DIAGRAM P-23
ABS/TCS ON-BOARD DIAGNOSIS P-24
DTC C1117 (17) P-28
DTC C1118 (82) P-30
DTC C1119 (83) P-32
DTC U2021 (87) P-34
TROUBLESHOOTING (ABS/TCS) P-35
ABS/TCS SYSTEM DIAGRAM P-35
FORWARD P-36
PRECAUTION P-36
SYMPTOM TROUBLESHOOTING P-39
NO.1 ABS WARNING LIGHT DOES NOT ILLUMINATE P-42
NO.2 BRAKE SYSTEM WARNING LIGHT DOES NOT ILLUMINATE P-42
NO.3 ABS WARNING LIGHT ANDBRAKE SYSTEM WARNING LIGHT STAY ON P-43
NO.4 ABS WARNING LIGHT STAYS ON P-44
NO.5 BRAKE SYSTEM WARNING LIGHT STAYS ON P-45
NO.6 ABS AND BRAKE SYSTEM WARNING LIGHTS COME ON WHEN DRIVING P-46
NO.7 ABS WARNING LIGHT COMES ON WHEN DRIVING P-46
NO.8 ABS AND BRAKE SYSTEM WARNING LIGHTS GO ON AND OFF P-48
NO.9 ABS WARNING LIGHT GOES ON AND OFF P-49
NO.10 BRAKE SYSTEM WARNING LIGHT GOES ON AND OFF P-50
NO.11 BRAKE SYSTEM MALFUNCTION P-51
NO.1 ABS WARNING LIGHT STAYS ON MORE THAN 4 SECONDS WITH IGNITION SWITCH ON. P-52
NO.2 ABS WARNING LIGHT DOES NOT ILLUMINATE WITH IGNITION SWITCH ON. P-54
NO.3 BRAKE SYSTEM WARNING LIGHT STAYS ON MORE THAN 4 SECONDS WITH IGNITION SWITCH ON. (PARKING BRAKE IS RELEASED.) P-55
NO.4 BRAKE SYSTEM WARNING LIGHT DOES NOT ILLUMINATE WITH IGNITION SWITCH ON. P-56
NO.5 ABS WARNING LIGHT, BRAKE SYSTEM WARNING LIGHT, TCS INDICATOR LIGHT AND TCS OFF LIGHT DO NOTILLUMINATE WITH IGNITION SWITCH ON. P-56
NO.6 TCS INDICATOR LIGHT DOES NOT ILLUMINATE WITH IGNITION SWITCH ON. P-57
NO.7 TCS OFF LIGHT DOES NOT ILLUMINATE WITH IGNITION SWITCH ON. P-58
NO.8 TCS INDICATOR LIGHT STAYS ON MORE THAN 4 SECONDS WITH IGNITION SWITCH ON. P-59
NO.9 TCS OFF LIGHT STAYS ON MORE THAN 4 SECONDS WITH IGNITION SWITCH ON. P-59
NO.10 THERE IS A MALFUNCTION IN SYSTEM EVEN THOUGH ABS WARNING LIGHT, BRAKE SYSTEM WARNING LIGHT, TCS INDICATOR LIGHT AND TCS OFF LIGHT INDICATE THAT THE SYSTEM IS NORMAL. P-60

OUTLINE

OUTLINE OF CONSTRUCTION

AME690201020W01

- The construction and operation of the braking system is essentially carried over from that of the previous MPV (LW), except for the following specification and features. (See MPV Training Manual 3340-1*-99F.) (See MPV Workshop Manual 1666-1*-99F.)
- Due to adoption of MZR-CD (RF Turbo) engine, vacuum pump and vacuum switch have been added.

End Of Sie

FEATURES

AME690201020W02

Improved Safety and Marketability

- The TCS has been adopted.

End Of Sie

SPECIFICATIONS

AME690201020W03

Item		Specification	
		New MPV (LW)	Previous MPV (LW)
Brake pedal	Type	Suspended	
	Pedal lever ratio	4.1	
	Max. stroke (mm {in})	125 {4.92}	
Master cylinder	Type	Tandem (with level sensor)	
	Cylinder diameter (mm {in})	23.81 {0.9374}	
Front disc brake	Type	Ventilated disc	
	Cylinder bore (mm {in})	42.85 {1.687} × 2	
	Pad dimensions (area × thickness) (mm^2 {in^2} × mm {in})	5,850 {9.36} × 10.5 {0.413}	
	Disc plate dimensions (outer diameter × thickness) (mm {in} × mm {in})	L3, AJ (Australian specs., L.H.D. (except ISRAEL)): 274 {10.8} × 28 {1.1} AJ (ISRAEL, R.H.D. (except Australian specs), MZR-CD (RF Turbo): 296 {11.7} × 28 {1.1}	274 {10.8} × 28 {1.1}
Rear drum brake	Type	Leading-trailing	
	Wheel cylinder bore (mm {in})	Australian, European (lL.H.D.), Genaral (L.H.D.) specs.: 19.05 {0.75} Genaral (R.H.D.), U.K. specs.: 20.64{0.81}	19.05 {0.75}
	Lining dimensions (area × length × thickness) (mm {in} × mm {in}× mm {in})	50 × 203.8 × 4.5 {1.97 × 8.02× 0.18}	50 × 243.8 × 4.5 {1.97 × 9.60 × 0.18}
	Drum inner diameter (mm {in})	254 {10.0}	
	Shoe clearance adjustment	Automatic adjuster	
Power brake unit	Type	Vacuum multiplier	
	Diameter (mm {in})	293 {11.5}	
Braking force control device	Type	EBD	
Parking brake	Type	Mechanical two-rear-wheel control	
	Operation system	Center lever	
Brake fluid	Type	European (L.H.D. U.K.) specs.: SAE J1703, FMVSS116 DOT3 OR DOT4 Except European (L.H.D. U.K.)specs.: SAE J1703, FMVSS116 DOT3	

Bold frames: New specifications

End Of Sie

STRUCTURAL VIEW

AME690201020W04

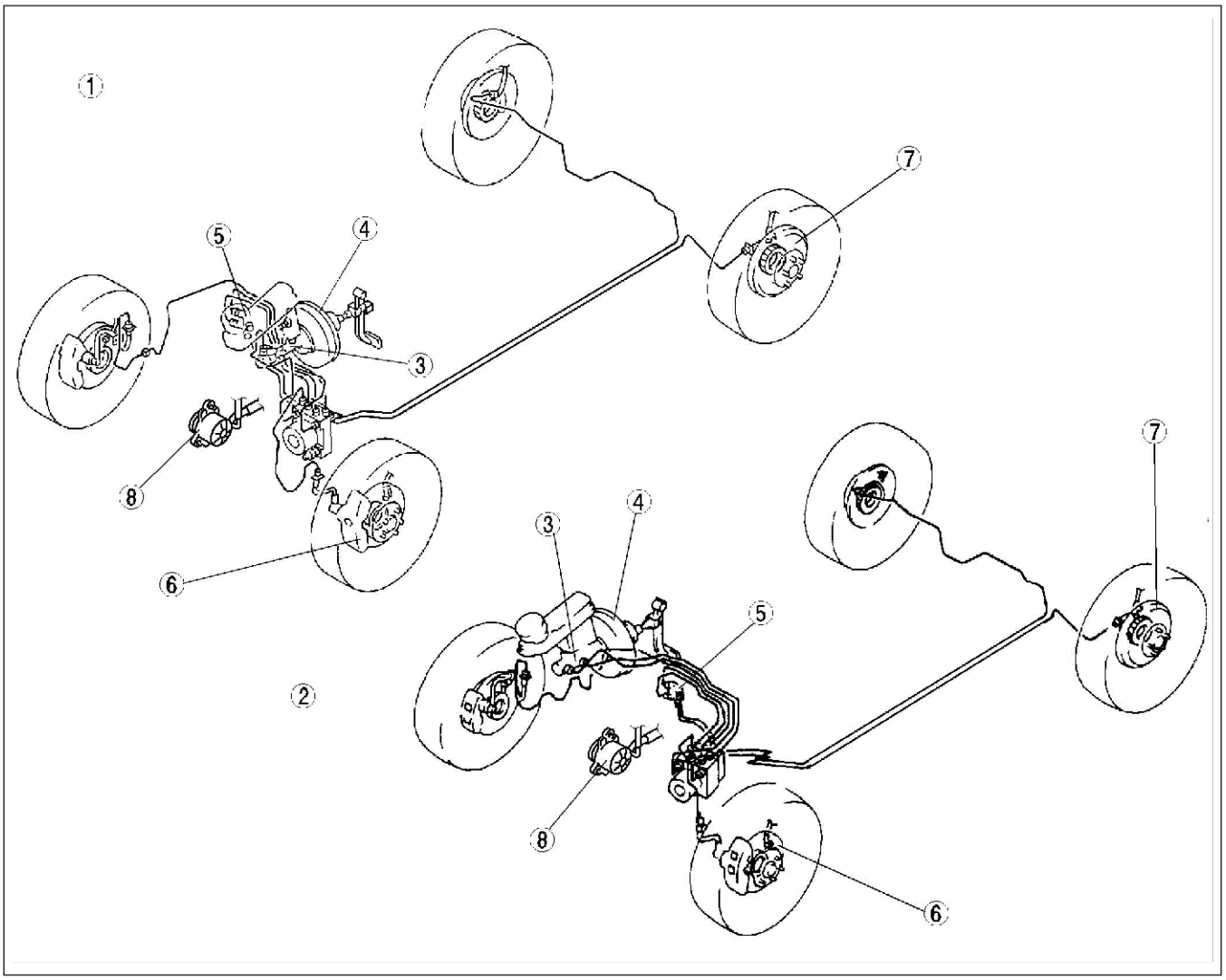

AME6912W009

1	L.H.D.
2	R.H.D.
3	Master cylinder
4	Power brake unit

5	Brake pipe joint
6	Front brake (disc)
7	Rear brake (drum)
8	Vacuum pump

P

End Of Sec

TRACTION CONTROL SYSTEM

TCS OUTLINE

AME691846444W01

- The TCS component and control strategy is the same as that of the XEDOS 9, Mazda MILLENIA KL engine model, except for the following. (See XEDOS 9, MILLENIA Workshop Manual Supplement 1694-1*-00H.)
  — TCS OFF switch is installed in the driver's side instrument panel.

End Of Sie

TCS STRUCTURAL VIEW

AME691846444W02

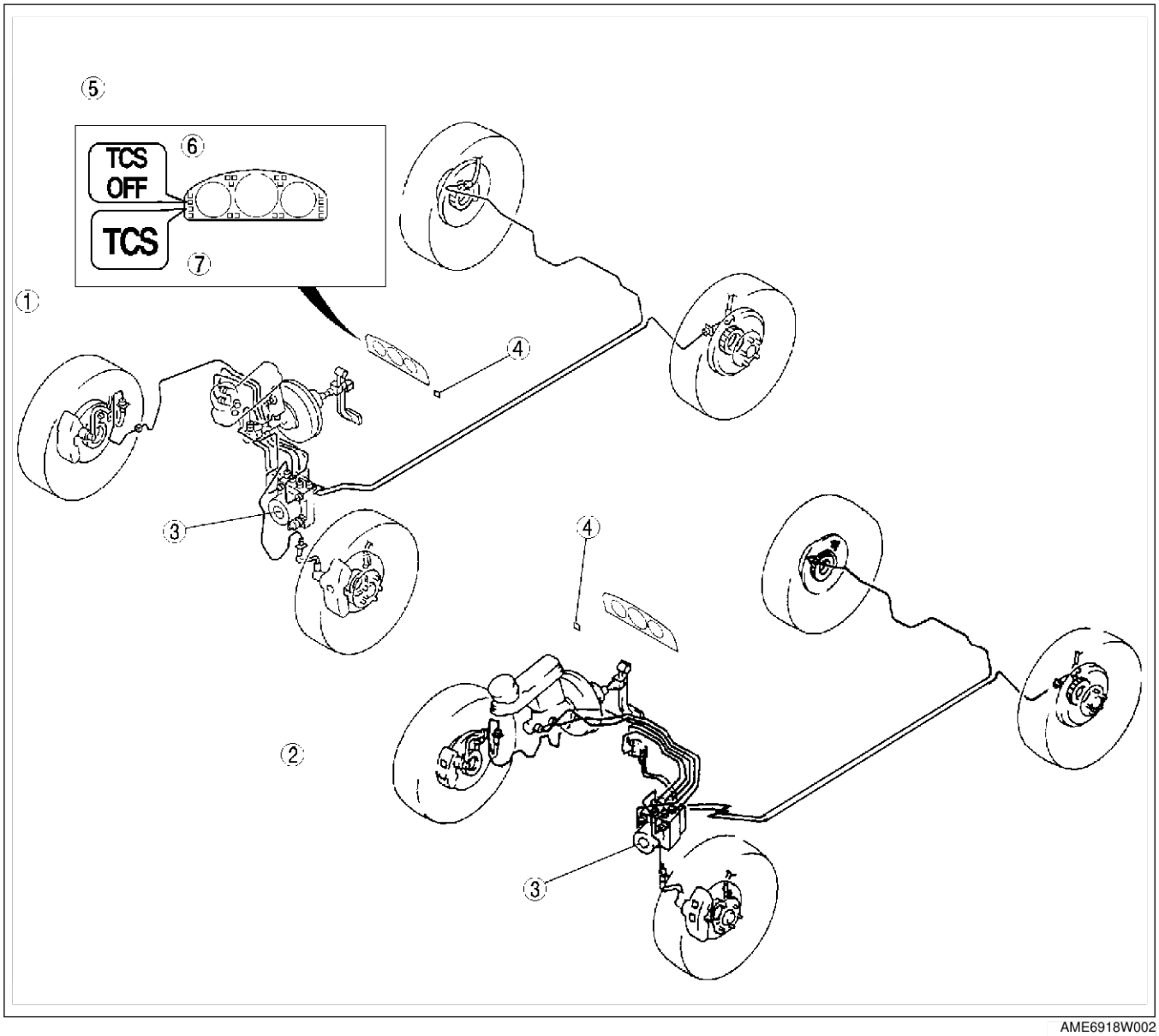

AME6918W002

1	R.H.D.
2	L.H.D.
3	ABS/TCS HU/CM
4	TCS OFF switch

5	Instrument cluster
6	TCS OFF light
7	TCS indicator light

End Of Sie

TCS SYSTEM DIAGRAM

AME691846444W03

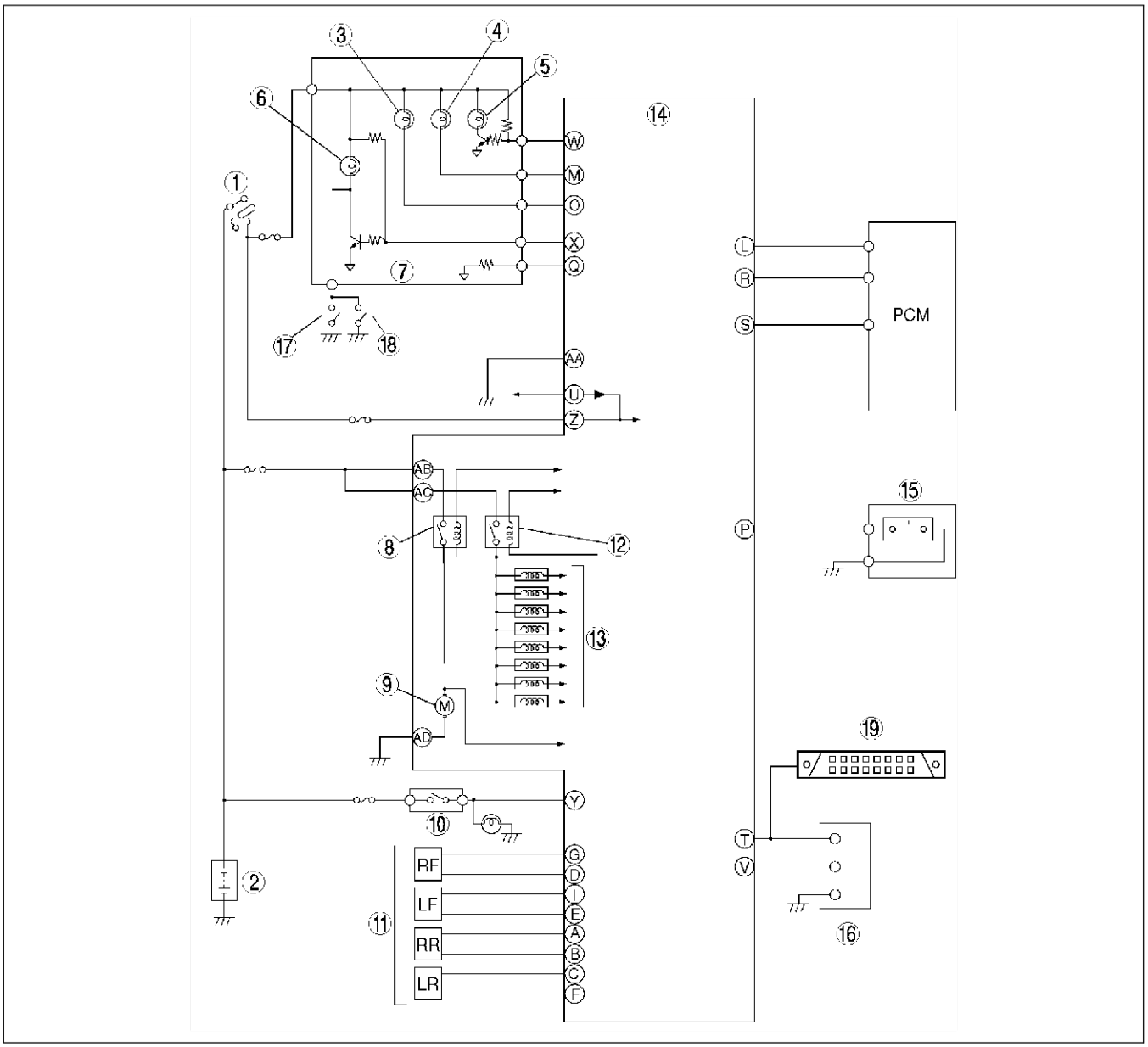

AME6918W001

1	Ignition switch
2	Battery
3	TCS OFF light
4	TCS indicator light
5	ABS warning light
6	BRAKE system warning light
7	Instrument cluster
8	Motor relay
9	ABS motor
10	Brake switch

11	ABS wheel-speed sensor
12	Fail-safe relay
13	Solenoid valve
14	ABS/TCS HU/CM
15	TCS OFF switch
16	Data link connector (DLC)
17	Parking brake switch
18	Brake fluid level sensor
19	Data link connector-2 (DLC-2)

End Of Site

ON-BOARD DIAGNOSTIC (ABS/TCS)

OUTLINE

AME697543000W01

- The operation of the on-board diagnostic system for ABS (ABS/TCS) is essentially carried over from that of the current XEDOS 9, Mazda MILLENIA KL engine model, except for the following. (See XEDOS 9, MILLENIA Workshop Manual Supplement 1694-1*-00H.)
  - — PID data monitor function and active command function have been changed.
  - — Four-digit DTCs can be displayed on the WDS or equivalent display by connecting the WDS or equivalent to the DLC-2.

Fail-safe, Memory, and Failure Indication Function

DTC retrieve and clear procedure

- Two-digit DTCs can be displayed/erased the same way as the previous MPV.
- The DTCs are read and erased the same way as the current millenia.
- The following related DTCs have been added with adoption of the TCS.

DTC list (with TCS)

X: Available

Part name	DTC		Determine condition	Memory
	WDS or equivalent	ABS warning light	ABS warning light	
PCM and/or engine speed signal line	C1117	17	Engine speed **0 rpm** and vehicle speed **10 km/h {6.2 mph}** continues for specified time.	X
PCM and/or torque reduction request signal line	C1118	82	After engine is warmed up, the signal that indicates torque reduction signal malfunction or engine control system malfunction is sent from PCM.	X
Torque reduction inhibit signal line	C1119	83	After engine is started, malfunction of torque reduction inhibit signal line is detected.	X
Engine coolant temperature	U2021	87	After engine is warmed up, engine coolant temperature is **0 °C {32 °F}** or less, and TCS operation is inhibited by PCM.	N/A

Fail-safe Function

Fail-safe function table (with TCS)

Malfunction location	DTC		Fail-safe function						
			Warning light illumination condition				Control condition		
	WDS or equivalent	ABS warning light	ABS warning light	BRAKE system warning light (when parking brake is released)	TCS OFF light	TCS indicator light	ABS control	EBD control	TCS control
PCM and/or engine speed signal line	C1117	17	Not Illuminated	Not Illuminated	Illuminated	Illuminated	Available	Available	Stop
PCM and/or torque reduction request signal line	C1118	82	Not Illuminated	Not Illuminated	Illuminated	Illuminated	Available	Available	Stop
Torque reduction inhibit signal line	C1119	83	Not Illuminated	Not Illuminated	Illuminated	Illuminated	Available	Available	Stop
Engine coolant temperature	U2021	87	Not Illuminated	Not Illuminated	Illuminated *1	Not Illuminated	Available	Available	Stop

*1 : When engine coolant temperature is **0 °C {32 °F}** or less, and TCS operation is inhibited by PCM. DTC is not stored. When engine coolant temperature rises and TCS OFF light goes out, the system is normal.

PID/DATA Monitor Table

PID name	input/output part	Operation/unit
ABS_LAMP	ABS warning light driver output state	ON/OFF
ABSLF_ I	LF ABS pressure retention valve output state	ON/OFF
ABSLF_O	LF ABS pressure reduction valve output state	ON/OFF
ABSLR_I	LR ABS pressure retention valve output state	ON/OFF
ABSLR_O	LR ABS pressure reduction valve output state	ON/OFF
ABSRF_I	RF ABS pressure retention valve output state	ON/OFF
ABSRF_O	RF ABS pressure reduction valve output state	ON/OFF
ABSRR_I	RR ABS pressure retention valve output state	ON/OFF
ABSRR_O	RR ABS pressure reduction valve output state	ON/OFF
BOO_ABS	Brake pedal switch input	ON/OFF
BRAKE_LMP	BRAKE system warning light driver output state	ON/OFF
LF_WSPD	LF wheel-speed sensor input	KPH/MPH
LR_WSPD	LR wheel-speed sensor input	KPH/MPH
ABSPMPRLY	ABS motor relay output state	ON/OFF
PMP_MOTOR	ABS motor output state	ON/OFF
RF_WSPD	RF wheel-speed sensor input	KPH/MPH
RR_WSPD	RR wheel-speed sensor input	KPH/MPH
ABSVLVRLY	Fail-safe relay output state	ON/OFF
RPM*	Engine speed	RPM
TRAC_SW*	TCS OFF switch	ON/OFF
ABS_VOLT	System battery voltage value	V

* : with TCS

Active Command Modes Table

Command Name	Definition	Operation	Note
PMP_MOTOR	ABS motor	ON/OFF	Ignition key at ON (Engine run, vehicle is not moving)
RF_OUTLET	Right front ABS pressure reduction solenoid valve	ON/OFF	
RF_INLET	Right front ABS pressure retention solenoid valve	ON/OFF	
LF_OUTLET	Left front ABS pressure reduction solenoid valve	ON/OFF	
LF_INLET	Left front ABS pressure retention solenoid valve	ON/OFF	
RR_OUTLET	Right rear ABS pressure reduction solenoid valve	ON/OFF	
RR_INLET	Right rear ABS pressure retention solenoid valve	ON/OFF	
LR_OUTLET	Left rear ABS pressure reduction solenoid valve	ON/OFF	
LR_INLET	Left rear ABS pressure retention solenoid valve	ON/OFF	
ABSVLVRLY	Fail-safe relay	ON/OFF	
CHK_TRAC*	Check traction control indicator	ON/OFF	
TRAC_OFF*	Traction control off indicator	ON/OFF	
ENG_TQR*	Engine torque reduction signal output	Nm	
VS_OUTPUT	Vehicle speed signal	KPH/MPH	

* : with TCS

Note

- When operating the ABS motor and each valve using the active command mode, turn ABSVLVRLY ON, and then each command ON. ABSVLVRLY regulates the power supply for the ABS motor and all eight valves.

End Of Sie

P

OUTLINE

SUPPLEMENTAL SERVICE INFORMATION

AME690201020W05

- The following changes have been made since publication of the MPV Workshop Manual (1666-1*-99F).

Master cylinder
- Removal/installation procedure has been modified.

Power brake unit
- Inspection procedure has been modified.
- Removal/installation procedure has been modified.

Brake pipe joint
- Replacement procedure has been modified.

Vacuum switch (MZR-CD (RF Turbo))
- Inspection procedure has been modified.
- Removal/installation procedure has been modified.

Vacuum pump (MZR-CD (RF Turbo))
- Inspection procedure has been modified.
- Removal/installation procedure has been modified.

Parking brake (lever type)
- Inspection procedure has been modified.

TCS OFF switch
- Removal/installation procedure has been modified.
- Inspection procedure has been modified.

On-board diagnostic (ABS/TCS)
- TCS have been added.

Troubleshooting (ABS/TCS)
- TCS have been added.

End Of Sie

GENERAL PROCEDURES

PRECAUTION (BRAKES)

AME691001020W01

Wheels and Tires Removal/Installation

1. The removal and installation procedures for the wheels and tires are not mentioned in this section. When a wheel is removed, tighten it to **89—117 N·m {9.0—12.0 kgf·m, 65.1—86.7 ft·lbf}**.

Brake Lines Disconnection/Connection

Caution
- **Brake fluid will damage painted surfaces. If brake fluid does get on a painted surface, wipe it off immediately.**

1. Tighten the brake pipe flare nut using the **SST** (49 0259 770B). Be sure to modify the brake pipe flare nut tightening torque to allow for use of a torque wrench-**SST** combination.
   - If any brake line has been disconnected anytime during the procedure, add brake fluid, bleed the brakes, and inspect for leakage after the procedure has been completed.

Connectors Disconnection

1. Disconnect the negative battery cable before doing any work that requires handling of connectors. Reconnect the negative battery cable only after the work is completed.

ABS/TCS Components Operations

1. Make sure that there are no DTCs in the ABS/TCS, memory after working on ABS components.
   - If there are any DTCs in the memory, clear them.

End Of Sie

CONVENTIONAL BRAKE SYSTEM

MASTER CYLINDER REMOVAL/INSTALLATION

AME691243400W01

1. For the MZR-CD (RF Turbo) engine model, remove the fuel filter installation bolt and put the fuel filter aside. (See F5–79 FUEL FILTER COMPONENT REMOVAL/INSTALLATION.)
2. Remove in the order indicated in the table.

1	Brake fluid level sensor connector
2	Brake pipe
3	Master cylinder (See P–9 Master Cylinder Installation Note)

3. Install in the reverse order of removal.

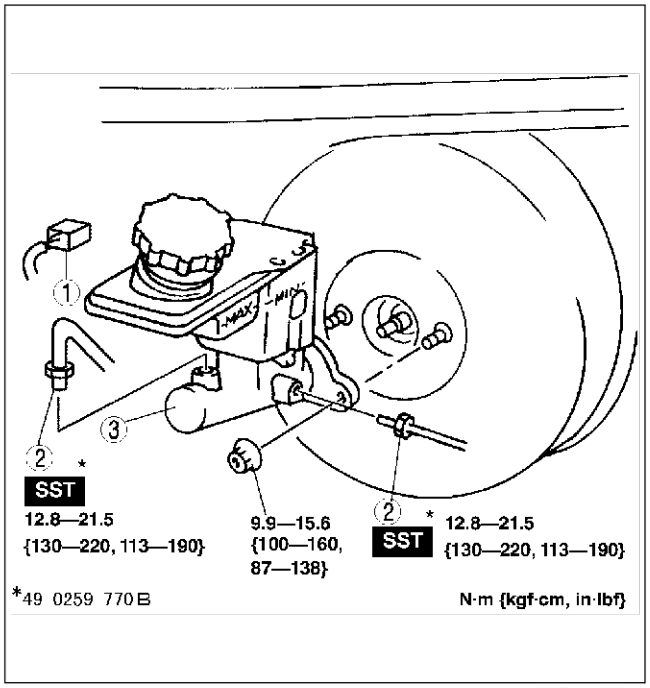

AME6912W004

Master Cylinder Installation Note

1. Place the **SST** atop the master cylinder. Turn the adjusting bolt until it touches the bottom of the push rod hole in the piston.
2. Apply **66.7 kPa {500 mmHg, 19.7 inHg}** vacuum to the power brake unit using a vacuum pump.

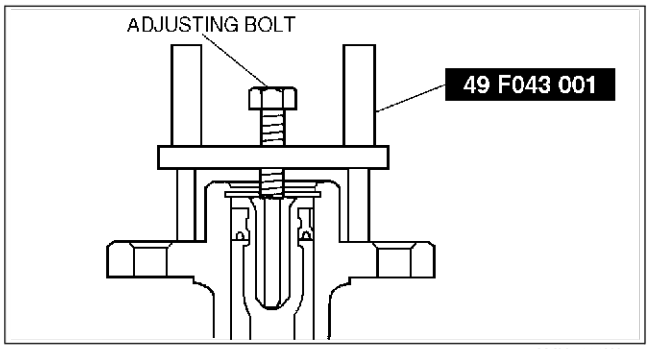

AMU0411W002

3. Invert the **SST** used in step 1 and place it on the power brake unit.

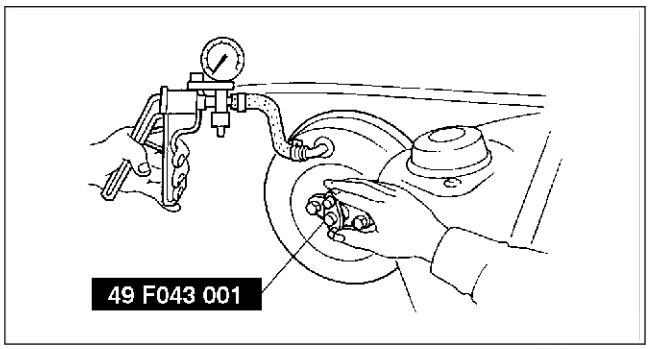

ZMU0411W102

P

4. Measure the clearance between the end of the SST and the push rod of the power brake unit.
   - If it is not **0 mm {0 in}**, loosen the push rod locknut and turn the push rod to adjust it by using the **SSTs**.

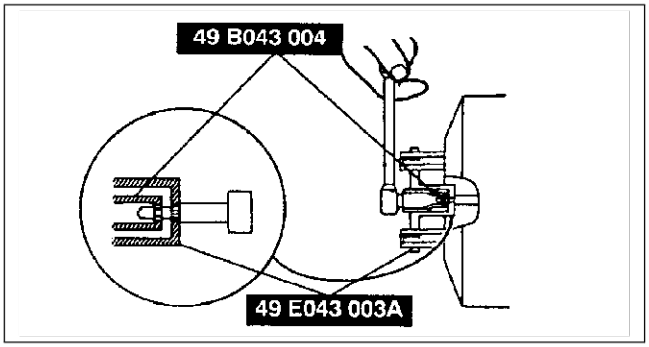

X3U411WAC

End Of Sie

POWER BRAKE UNIT INSPECTION

AME691243800W01

Power Brake Unit Function Check (Using Gauges)

1. Connect the **SSTs** or equivalent, vacuum gauge (A), and pedal depression force gauge (B) as shown. Bleed the air from the **SST** gauges before performing the following tests.
2. Check for vacuum loss with unloaded condition as follows.
   (1) Start the engine.
   (2) Stop the engine when the vacuum gauge reading reaches **66.7 kPa {500 mmHg, 19.7 inHg}**.
   (3) Observe the vacuum gauge for **15 seconds**. If the gauge shows **63.4—66.6 kPa {475—500 mmHg, 18.7—19.6 inHg}**, the unit is operating.

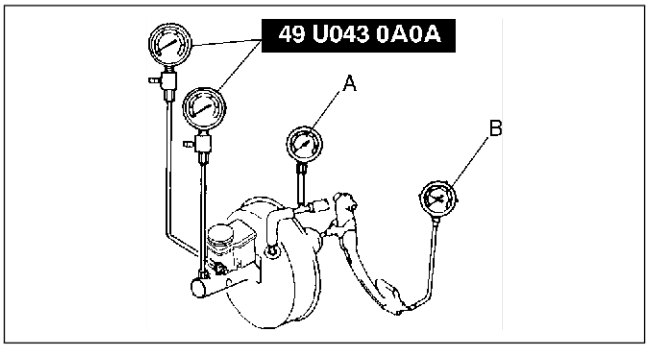

Y3E6912W002

3. Check for vacuum loss with loaded condition as follows.
   (1) Start the engine.
   (2) Depress the brake pedal with a force of **200 N {20 kgf, 44 lbf}**.
   (3) With the brake pedal depressed, stop the engine when the vacuum gauge reading reaches **66.7 kPa {500 mmHg, 19.7 inHg}**.
   (4) Observe the vacuum gauge for **15 seconds**. If the gauge shows **63.4—66.6 kPa {475—500 mmHg, 18.7—19.6 inHg}**, the unit is operating.
4. Check for hydraulic pressure as follows.
   (1) If fluid pressure is within the specification when the engine is stopped (vacuum **0 kPa {0 mmHg, 0 inHg}**), the unit is operating.

Pedal force	Fluid pressure
200 N {20.4 kgf, 44.9 lbf}	790 kPa {8.06 kgf/cm^2, 115 psi} min.

   (2) Start the engine. Depress the brake pedal when the vacuum reaches **66.7 kPa {500 mmHg, 19.7 inHg}.**
   - If fluid pressure is within the specification, the unit is operating.

Pedal force	Fluid pressure
200 N {20.4 kgf, 44.9 lbf}	8,830 kPa {90.04 kgf/cm^2, 1,280 psi} min.

End Of Sie

POWER BRAKE UNIT REMOVAL/INSTALLATION

AME691243800W02

1. For the L.H.D. model, remove the battery.
2. For the L.H.D. model, remove the air cleaner. (See F3–50 INTAKE-AIR SYSTEM REMOVAL/INSTALLATION.)(See F4–60 INTAKE-AIR SYSTEM REMOVAL/INSTALLATION.)(See F5–66 INTAKE-AIR SYSTEM REMOVAL/INSTALLATION.)
3. For the L.H.D. model (MZR-CD (RF Turbo)), remove the brake pipes between the master cylinder and brake pipe joint.
4. For the R.H.D. model (AJ), remove the dynamic chamber. (See F4–60 INTAKE-AIR SYSTEM REMOVAL/INSTALLATION.)

5. For the R.H.D. model (AJ), remove the cruise actuator. (See T–78 CRUISE ACTUATOR REMOVAL/INSTALLATION.)
6. Remove the master cylinder. (See P–9 MASTER CYLINDER REMOVAL/INSTALLATION.)
7. For the MZR-CD (RF Turbo) model, remove the vacuum switch. (See P–13 VACUUM SWITCH REMOVAL/INSTALLATION (MZR-CD (RF Turbo)).)
8. Remove in the order indicated in the table.

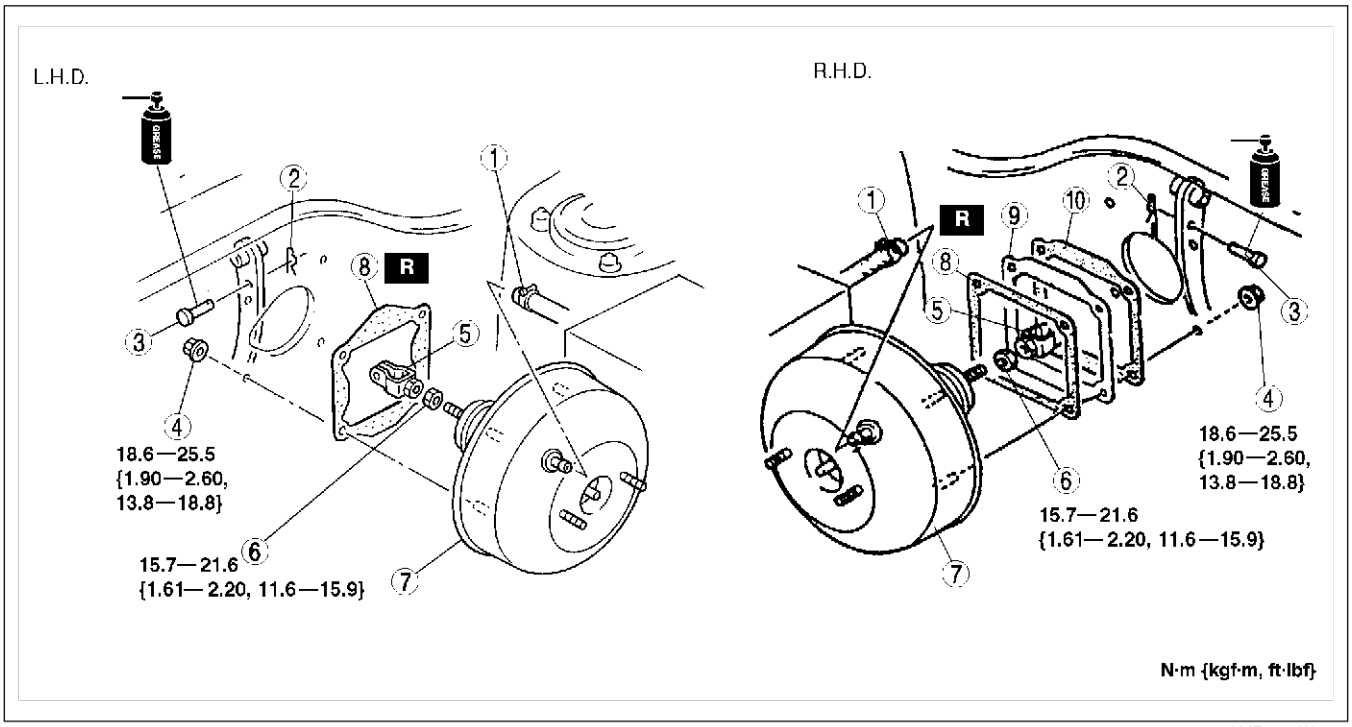

AME6912W0001

1	Vacuum hose
2	Snap pin
3	Clevis pin
4	Nut
5	Fork

6	Nut
7	Power brake unit
8	Gasket
9	Spacer
10	Gasket

9. Install in the reverse order of removal.

End Of Sie

VACUUM PUMP INSPECTION (MZR-CD (RF TURBO))

AME691218777W01

1. Warn up the engine.
2. Disconnect the vacuum hose from the vacuum pump and connect a vacuum gauge as shown in the figure, then check the vacuum.
   - If the pressure is less than the specification, inspect for the following.
     — Malfunction of the vacuum pump
     — Shortage of the lubrication oil pressure

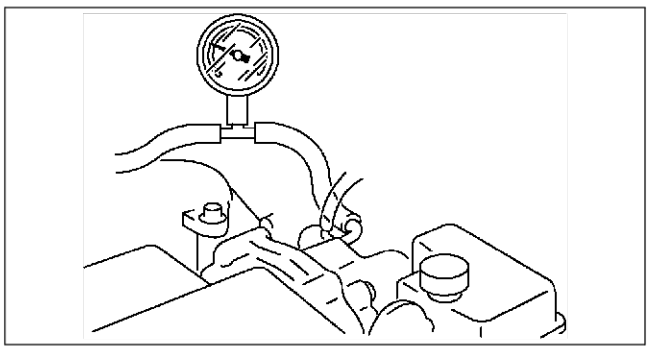

AME6912W006

Vacuum specification (In 8 seconds)
Engine speed 1,270 rpm:
66.6 kPa {500 mmHg, 19.7 inHg}

Maximum vacuum
Engine speed 2,450 rpm:
93.3 kPa {700 mmHg, 27.6 inHg}

End Of Sie

P

VACUUM PUMP REMOVAL/INSTALLATION (MZR-CD (RF TURBO))

AME691218777W02

1. Remove in the order indicated in the table.

1	Vacuum hose
2	Bolt
3	Vacuum pump (See P–12 Vacuum Pump Installation Note)
4	O-ring

2. Install in the reverse order of removal.

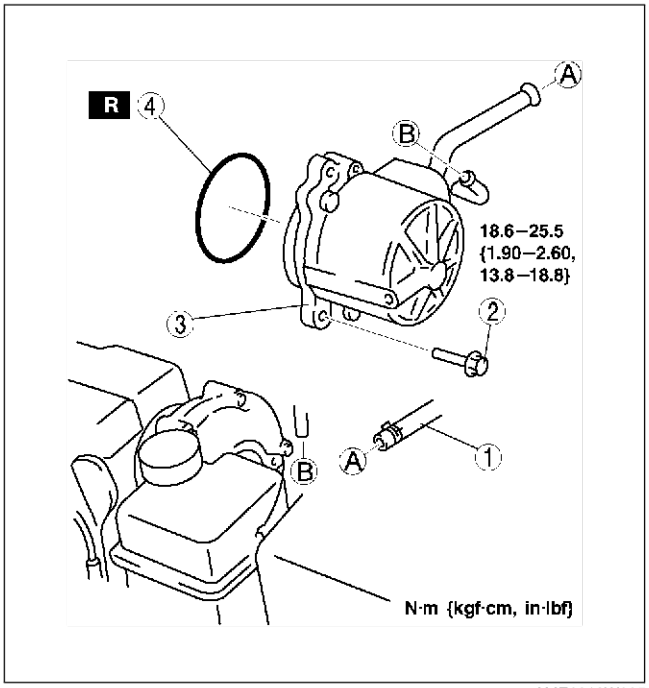

AME6912W005

Vacuum Pump Installation Note

1. Be careful the O-ring is not pinched when installing the vacuum pump.

End Of Sie

VACUUM SWITCH INSPECTION (MZR-CD (RF TURBO))

AME691266390W01

1. Remove the vacuum hose from the power brake unit.
2. Set the vacuum pump (any commercially available model) onto the power brake unit as shown.
3. Turn the ignition switch to ON.
4. Release the parking brake.
5. Apply vacuum to the power brake unit using the vacuum pump (any commercially available model) and verify the operating condition of the brake warning light. The vacuum switch is functioning normally if it corresponds to the above specifications.
   - If not as specified, replace the vacuum switch.

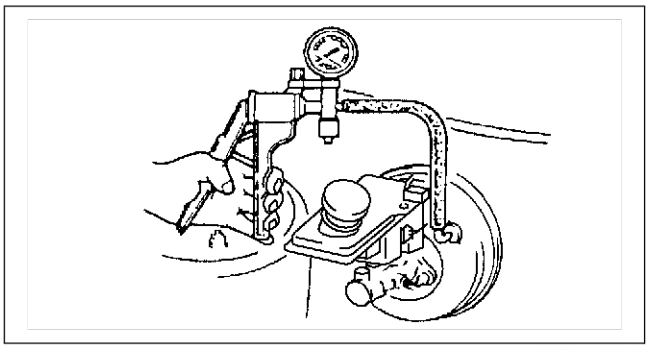

AME6912W007

Vacuum kPa {mm Hg, inHg}	Brake warning light
Below 10.7±2.7 {80±20, 3.1±0.8}	ON
Above 10.7±2.7 {80±20, 3.1±0.8}	OFF

End Of Sie

VACUUM SWITCH REMOVAL/INSTALLATION (MZR-CD (RF TURBO))

AME691266390W02

1. Remove in the order indicated in the table.

1	Connector
2	Vacuum switch (See P–13 Vacuum Switch Installation Note)

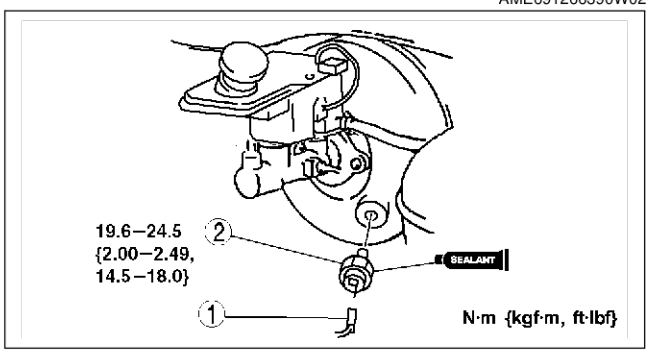

AME6912W008

2. Install in the reverse order of removal.

Vacuum Switch Installation Note

Caution

- **Do not apply sealant to the lip of the vacuum switch as it may cause a malfunction to occur.**

1. apply sealant to the area shown of the new vacuum switch.

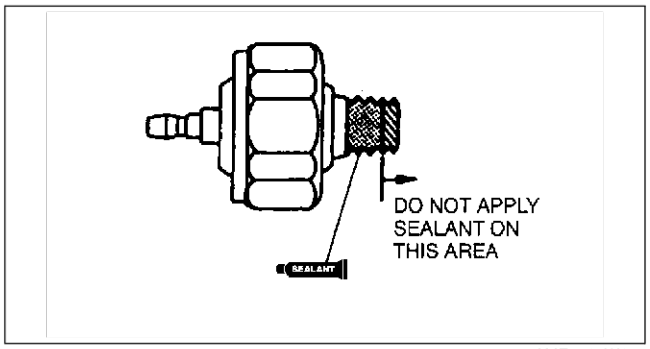

AME6912W100

End Of Step

BRAKE PIPE JOINT REPLACEMENT

AME691243900W01

1. For the AJ engine model, remove the dynamic chamber. (See F4–60 INTAKE-AIR SYSTEM REMOVAL/INSTALLATION.)
2. For the MZR-CD (RF Turbo) engine model, remove the heater hose. (See U–8 HEATER PIPE AND HOSE COMPONENT REMOVAL/INSTALLATION.)
3. Remove in the order indicated in the table.

1	Brake pipe
2	Bolt
3	Brake pipe joint (See P–14 Brake Pipe Joint Installation Note)

4. Install in the reverse order of removal.

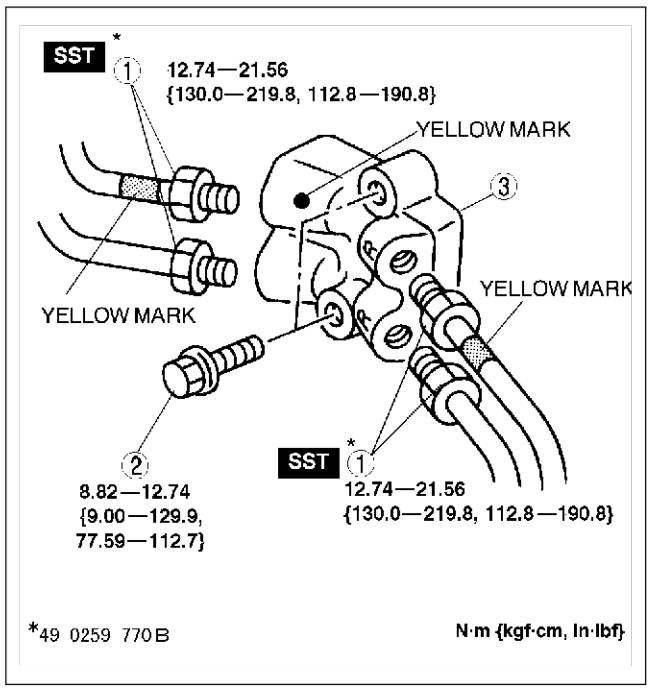

AME6912W0002

P

Brake Pipe Joint Installation Note

1. Install the Brake pipe joint so that the R mark faces the left side of the vehicle.

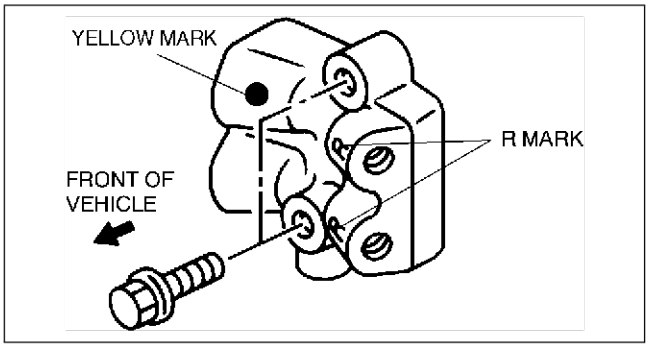

AMU0411W021

End Of Sie

PARKING BRAKE SYSTEM

PARKING BRAKE (LEVER TYPE) INSPECTION

AME691444000W01

1. Pull the parking brake lever a few times.
2. Depress the brake pedal a few times.
3. Inspect the parking brake stroke by pulling the parking brake lever with a force of **98 N {10 kgf, 22 lbf}**.

Stroke
4—5 notches (no drag)

End Of Sie

ANTILOCK BRAKE SYSTEM

FRONT ABS WHEEL-SPEED SENSOR REMOVAL/INSTALLATION

AME691643720W01

1. Remove the air cleaner (AJ, L3). (See F3–50 INTAKE-AIR SYSTEM REMOVAL/INSTALLATION.)(See F4–60 INTAKE-AIR SYSTEM REMOVAL/INSTALLATION.)
2. For the MZR-CD (RF Turbo) engine model, remove the fuel filter installation bolt and put the fuel filter aside. (See F5–79 FUEL FILTER COMPONENT REMOVAL/INSTALLATION.)
3. Remove in the order indicated in the table.
4. Install in the reverse order of removal.

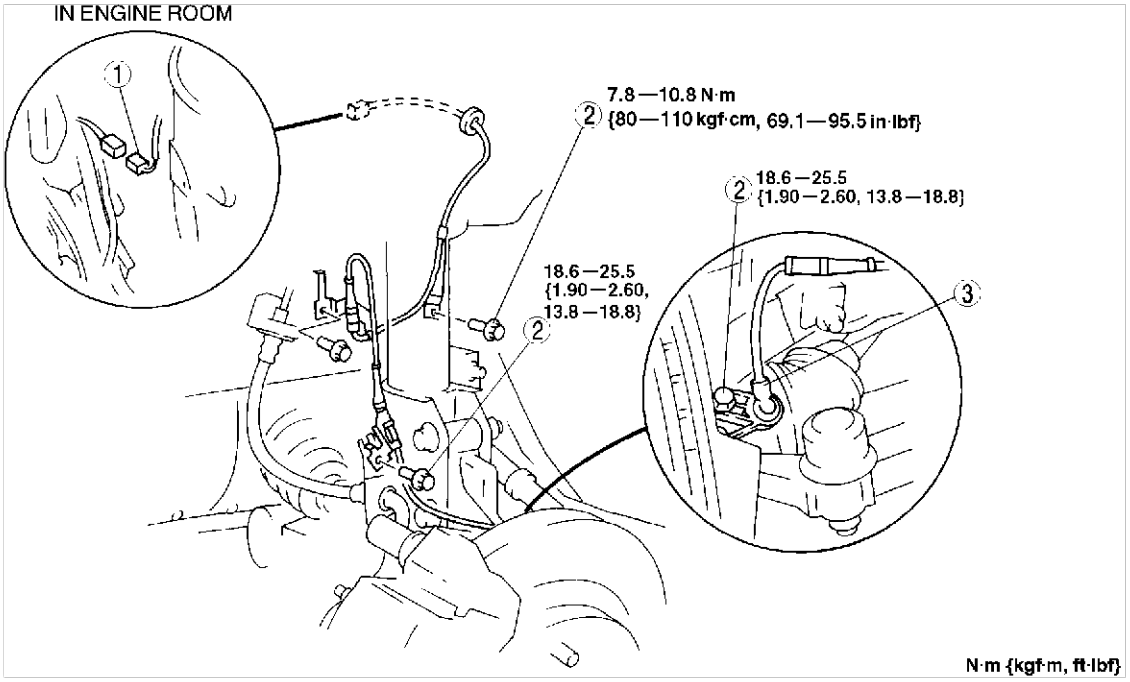

AMU0413W001

1	Connector
2	Bolt

3	Front ABS wheel-speed sensor

End Of Sie

P

TRACTION CONTROL SYSTEM

ABS/TCS HU/CM REMOVAL/INSTALLATION

AME691843700W01

Caution

- **Do not drop the ABS/TCS HU/CM. Replace it if it is subjected to an impact.**

1. Remove the splash shield.
2. Remove the battery.
3. Remove the air cleaner. (See F3–50 INTAKE-AIR SYSTEM REMOVAL/INSTALLATION.)(See F4–60 INTAKE-AIR SYSTEM REMOVAL/INSTALLATION.)(See F5–66 INTAKE-AIR SYSTEM REMOVAL/INSTALLATION.)
4. For the MZR-CD (RF Turbo) engine model, remove the fuel filter installation bolt and put the fuel filter aside. (See F5–79 FUEL FILTER COMPONENT REMOVAL/INSTALLATION.)
5. Remove in the order indicated in the table.
6. Install in the reverse order of removal.

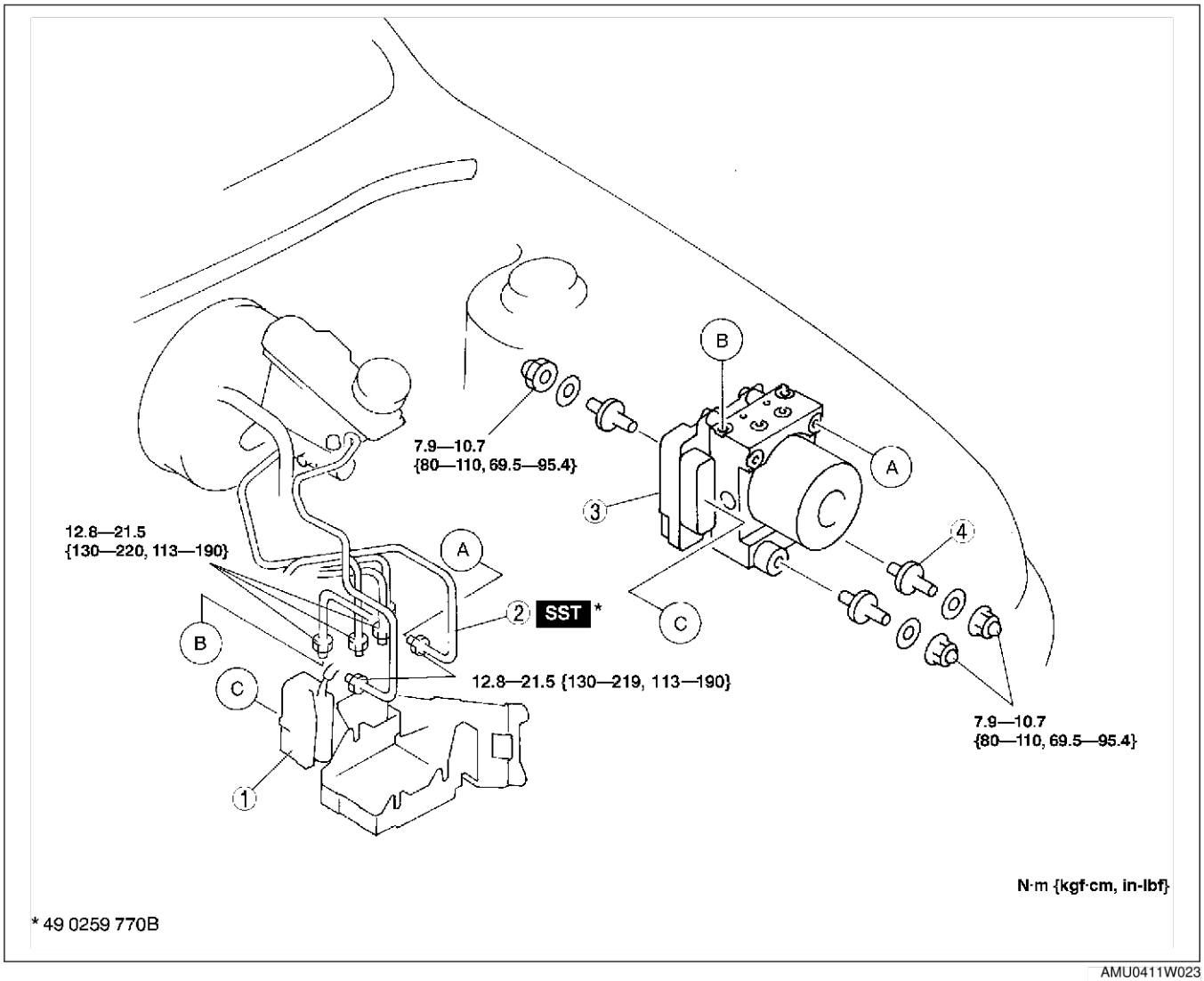

AMU0411W023

1	Connector (See P–17 Connector Removal Note) (See P–17 Connector Installation Note)
2	Brake pipe (See P–17 Brake Pipe Removal Note) (See P–17 Brake Pipe Installation Note)

3	ABS/TCS HU/CM (See P–17 ABS/TCS HU/CM Removal/Installation Note)
4	stud

Connector Removal Note

1. Pull the lock lever up and make it unlock.
2. Remove the connector.

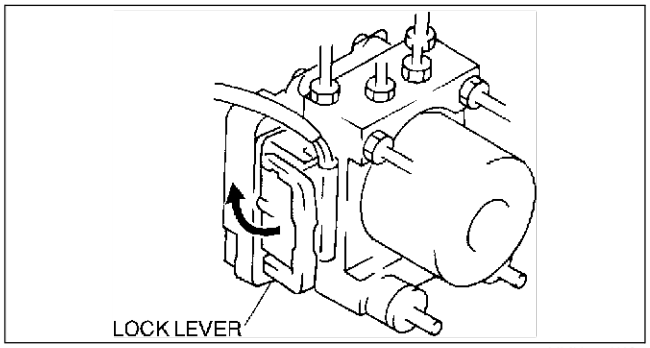

YMU413WC8

Brake Pipe Removal Note

1. Mark the brake pipe connecting positions before removal for reference during installation.

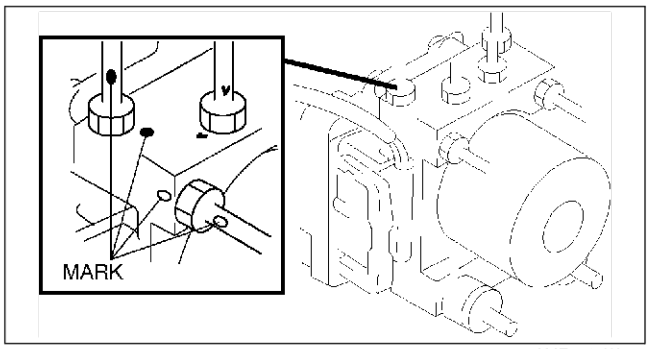

AME6918W006

ABS/TCS HU/CM Removal/Installation Note

1. When removing/installing the ABS/TCS HU/CM from/to the vehicle, attach a strip of protective tape on the ABS/TCS HU/CM connector to prevent brake fluid from entering.

Brake Pipe Installation Note

1. When install the brake pipe, align the marks made before removal with the ABS/TCS HU/CM as shown in the figure.

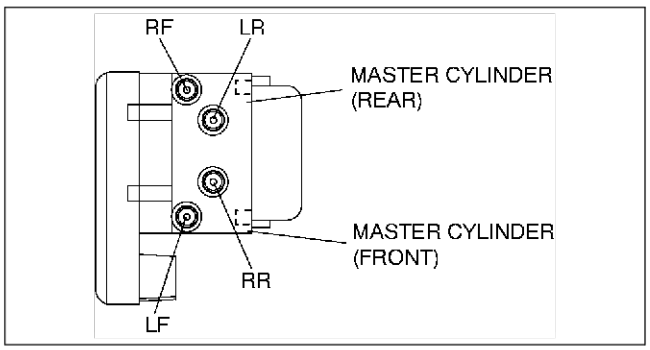

AME6918W007

Connector Installation Note

1. Verify that the lock lever of the harness connector is completely pulled up.

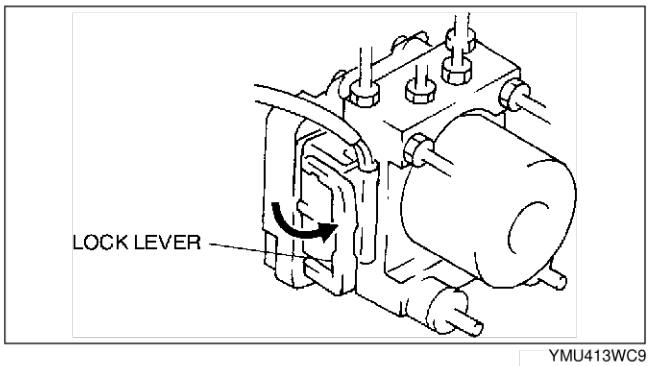

YMU413WC9

End Of Sta

ABS/TCS HU/CM INSPECTION

AME691843700W02

1. Remove the battery and battery tray.
2. Connect the **SST** between the ABS/TCS HU/CM and harness connector with the ignition switch OFF.
3. Attach the tester leads to the **SST** to inspect voltage by referring to the table below.

Caution

- **In the event that the vehicle is to be inspected while it is being driven, make sure that the SST harness does not interfere with parts in the engine room.**

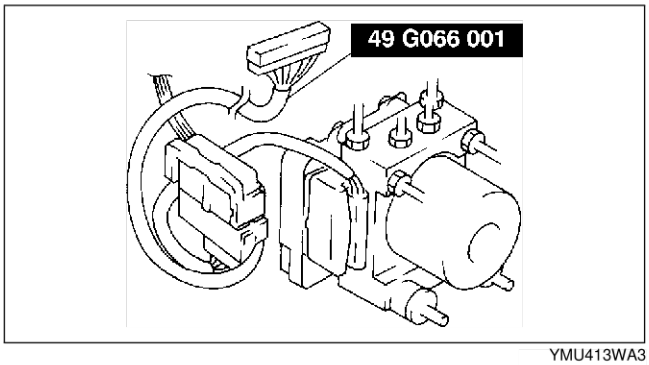

YMU413WA3

Terminal Voltage Table (reference value)

(Ignition switch is at ON, and connector is connected unless indicated otherwise)

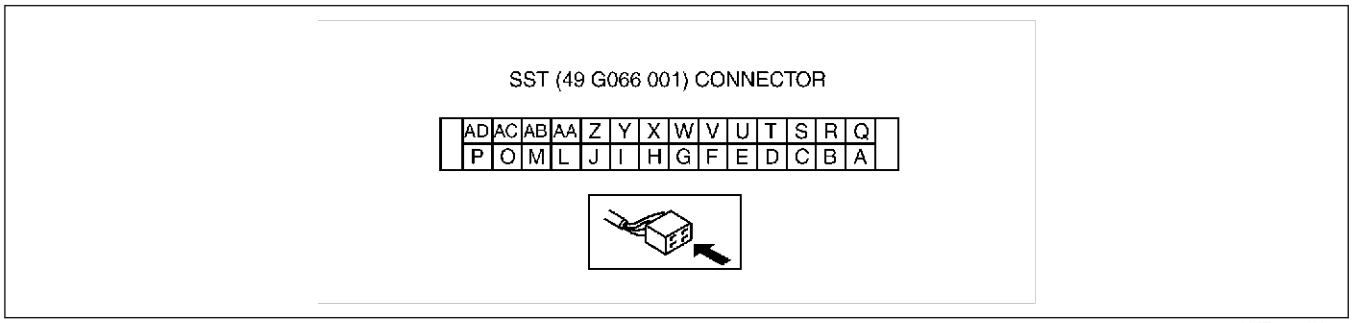

AME6918W005

Terminal	Signal	Connected to	Test condition	Voltage (V)	Action
A B	RR wheel-speed	RR wheel-speed sensor	Vehicle is stopped	0 (AC)	• Inspect harness (wheel-speed sensor - ABS/TCS HU/CM. • Inspect wheel-speed sensor. • Inspect related harness.
			Inspect using the wave profile. (See P–20 Inspection Using An Oscilloscope (Reference))		
C F	LR wheel-speed	LR wheel-speed sensor	Vehicle is stopped	0 (AC)	
			Inspect using the wave profile. (See P–20 Inspection Using An Oscilloscope (Reference))		
G D	RF wheel-speed	RF wheel-speed sensor	Vehicle is stopped	0 (AC)	
			Inspect using the wave profile. (See P–20 Inspection Using An Oscilloscope (Reference))		
I E	LF wheel-speed	LF wheel-speed sensor	Vehicle is stopped	0 (AC)	
			Inspect using the wave profile. (See P–20 Inspection Using An Oscilloscope (Reference))		
H	—	—	—	—	—
J	—	—	—	—	—
L*1	Torque down inhibition	PCM	Inspect using the wave profile. (See P–20 Inspection Using An Oscilloscope (Reference))		• Inspect harness (ABS/TCS HU/CM - PCM. • Inspect PCM. (See F3–83 PCM INSPECTION) • Inspect related harness.
M*1	TCS indicator	TCS indicator light	Light illuminated	Below 1.0	• Inspect harness, fuse (battery-TCS indicator light - ABS/TCS HU/CM . • Inspect related harness.
			Light not illuminated	10—12	

Terminal	Signal	Connected to	Test condition	Voltage (V)	Action
O*1	TCS OFF	TCS OFF light	Light illuminated	Below 1.0	• Inspect harness, fuse (battery-TCS OFF light - ABS/TCS HU/CM. • Inspect related harness.
			Light not illuminated	10—12	
P*1	TCS OFF switch	TCS OFF switch	When switch is pressed	0	• Inspect harness, fuse (battery-TCS - OFF SWITCH - ABS/TCS HU/CM. • Inspect related harness.
			When switch is not pressed	10—12	
Q	Vehicle speed output	Instrument cluster	Vehicle is stopped.	0	• Inspect harness ABS/TCS HU/CM - Instrument cluster). • Instrument cluster. • Inspect front wheel-speed sensor. • Inspect related harness.
			Inspect using the wave profile. (See P–20 Inspection Using An Oscilloscope (Reference))		
R*1	Torque down request	PCM	Inspect using the wave profile. (See P–20 Inspection Using An Oscilloscope (Reference))		• Inspect ABS/TCS HU/CM. • Inspect related harness.
S*1	Engine speed	PCM	Inspect using the wave profile. (See P–20 Inspection Using An Oscilloscope (Reference))		• Inspect harness ABS/TCS HU/CM - PCM). • Inspect PCM. (See F3–83 PCM INSPECTION) • Inspect related harness.
T	On-board diagnosis	KLN terminal of DLC and DLC-2	It cannot be determined with terminal voltage whether the condition is good or bad because advanced function diagnostic output is performed with serial communication. Inspect with service codes.		• Inspect related harness
U*2	—	Check connector	—	No need to check	—
V	On-board diagnosis	TBS terminal of DLC	—	10—14	• Inspect related harness
W	ABS warning light	ABS warning light	Illuminated	1.5 min.	• Inspect harness, fuse (battery-ABS warning light - ABS/TCS HU/CM). • Inspect related harness.
			Not illuminated	0.5 max.	
X	Brake system warning light	Brake system warning light	Illuminated	1.5 min.	• Inspect harness, fuse (battery-Brake system warning light - ABS/TCS HU/CM). • Inspect related harness.
			Not illuminated	0.5 max.	
Y	Brake switch	Brake switch	Brake pedal is depressed	B+	• Inspect harness, fuse (battery-brake switch-ABS/TCS HU/CM). • Inspect related harness.
			Brake pedal is released	0.5 max.	
Z	Battery	Ignition switch	—	B+	• Inspect harness, fuse (battery-IG SW-ABS/TCS HU/CM). • Inspect related harness.

P

Terminal	Signal	Connected to	Test condition	Voltage (V)	Action
AA	Ground	Ground	—	Below 1.0	• Inspect harness (ABS/TCS HU/CM)-ground point). • Inspect related harness.
AB	Battery (ABS motor)	Battery	—	B+	• Inspect harness, fuse (battery-ABS/ TCS HU/CM). • Inspect related harness.
AC	Battery (Solenoid valve)	Battery	—	B+	
AD	Ground	Ground	—	Below 1.0	• Inspect harness (ABS/TCS HU/CM)-ground point). • Inspect related harness.

*1 : With TCS
*2 : Used for vehicle manufacturing, not used for ABS.

Inspection Using An Oscilloscope (Reference)
Wheel speed

- ABS HU/CM terminal or ABS/TCS HU/CM terminal:
  RF : G (+) — D (-)
  RR : A (+) — B (-)
  LF : I (+) — E (-)
  LR : C (+) — F (-)
- Oscilloscope setting: 1 V/DIV (Y), 2 ms/DIV (X)
- Vehicle condition: Driving 30 km/h [18.6 mph]

Note
- As vehicle speed increases, wave period shortens.
- If the sensor rotor is malfunctioning, wave profile will warp.

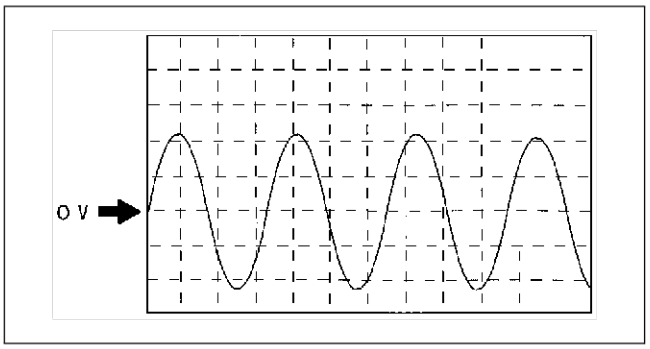

ZLU0413W105

Torque down inhibition

- ABS HU/CM terminal: L (+) — AA (-)
- Oscilloscope setting: 1 V/DIV (Y), 10 ms/DIV (X)
- Vehicle condition: Idle after warm-up (Engine speed at approximatly 650 rpm)

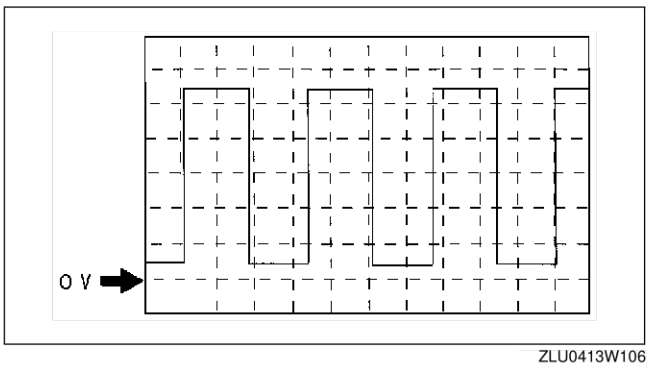

ZLU0413W106

Torque down request

- ABS HU/CM terminal: R (+) — AA (-)
- Oscilloscope setting: 1 V/DIV (Y), 5 ms/DIV (X)
- Vehicle condition: Idle after warm-up (Engine speed at approximatly 650 rpm)

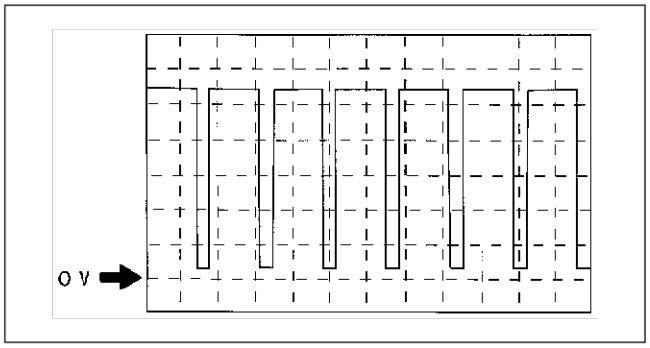

ZLU0413W107

Vehicle speed output

- ABS HU/CM terminal: Q (+) — AA (-)
- Oscilloscope setting: 2 V/DIV (Y), 25 ms/DIV (X)
- Vehicle condition: Driving 25 km/h [15.5 mph]

Note

- As vehicle speed increases, wave period shortens.

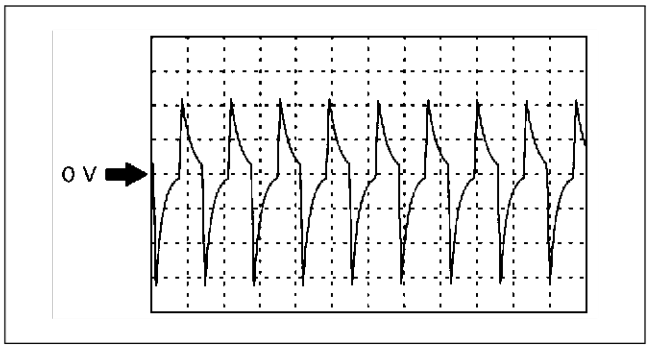

ZLU0413W108

Engine speed

- ABS HU/CM terminal: S (+) — AA (-)
- Oscilloscope setting: 2 V/DIV (Y), 25 ms/DIV (X)
- Vehicle condition: Idle after warm-up (Engine speed at approximatly 650 rpm)

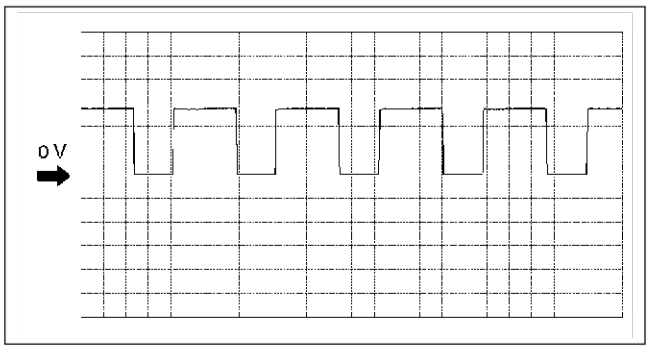

AMJ6918W006

End Of Sub

TCS OFF SWITCH REMOVAL/INSTALLATION

AME691846444W04

1. Press the hooks of the TCS OFF switch and pull the switch out.
2. Disconnect the connector.
3. Install in the reverse order of removal.

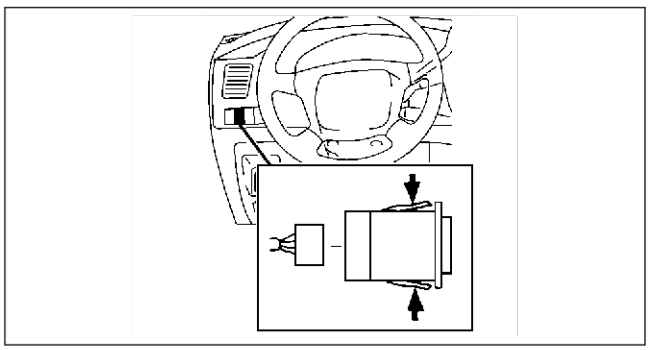

AMU0414W003

End Of Sub

P

TCS OFF SWITCH INSPECTION

AME691846444W05

Switch and ABS/TCS HU/CM Harness Inspection

1. Remove the TCS OFF switch.
2. Inspect for continuity between the TCS OFF switch terminals using an ohmmeter.

: Bulb : Continuity

Condition	Terminal				
	A	B	C	D	E
When the switch is pressed	○		○	○—(●)—○	
When the switch is released				○—(●)—○	

AMU0414W005

- If not within the specification, replace the TCS OFF switch.

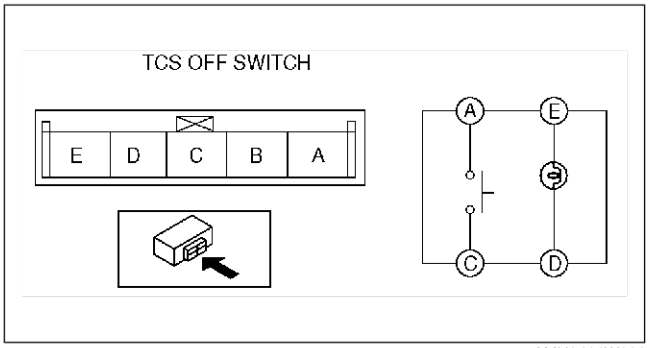

AMU0414W006

End Of Sie

ON-BOARD DIAGNOSTIC (ABS/TCS)

ABS/TCS SYSTEM DIAGRAM

AME697543000W02

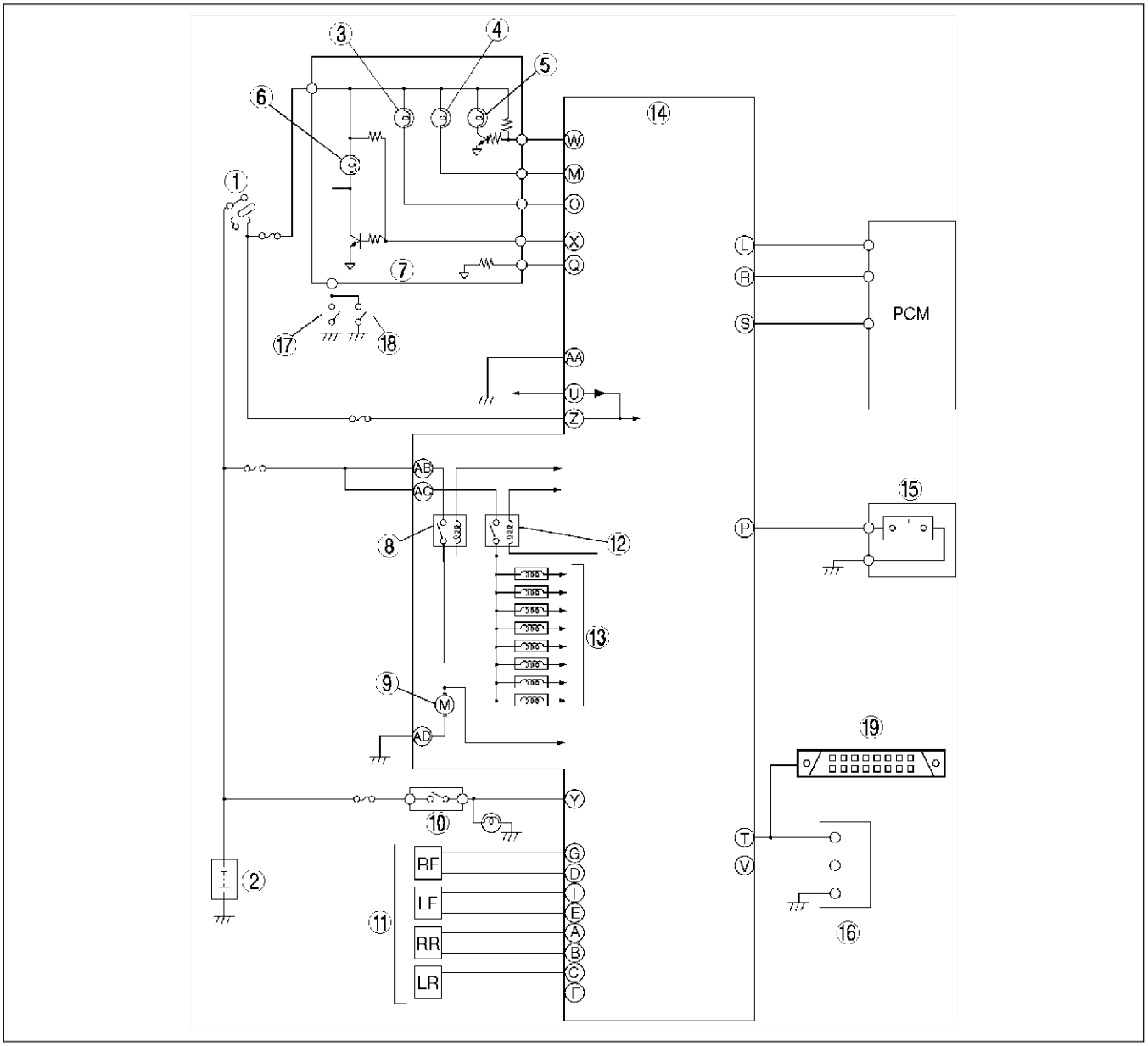

AME6918W001

1	Ignition switch
2	Battery
3	TCS OFF light
4	TCS indicator light
5	ABS warning light
6	BRAKE system warning light
7	Instrument cluster
8	Motor relay
9	ABS motor
10	Brake switch

11	ABS wheel-speed sensor
12	Fail-safe relay
13	Solenoid valve
14	ABS/TCS HU/CM
15	TCS OFF switch
16	Data link connector (DLC)
17	Parking brake switch
18	Brake fluid level sensor
19	Data link connector-2 (DLC-2)

End Of Sie

P

ABS/TCS ON-BOARD DIAGNOSIS

AME697543000W03

On-Board Diagnostic (OBD) Test Description

- The OBD test inspects the integrity and function of the ABS/TCS and outputs the results when requested by the specific tests.
- On-board diagnostic test also:
  - — Provides a quick inspection of the ABS.
  - — Is usually performed at the start of each diagnostic procedure.
  - — Provides verification after repairs to ensure that no other faults occurred during service.
- The OBD test is divided into three tests:
  - — Read/clear diagnostic results, PID monitor and record and active command modes.

Read/clear diagnostic results

- This function allows you to read or clear DTCs in the ABS (ABS/TCS) HU/CM memory.

PID/data monitor and record

- This function allows you to access certain data values, input signals, calculated values, and system status information.

Active command modes

- This function allows you to control devices through WDS or equivalent.

DTCs Reading Procedure

1. Connect WDS or equivalent to the vehicle DLC-2 16-pin connector located on the left side of the steering column.
2. Retrieve DTC using WDS or equivalent.

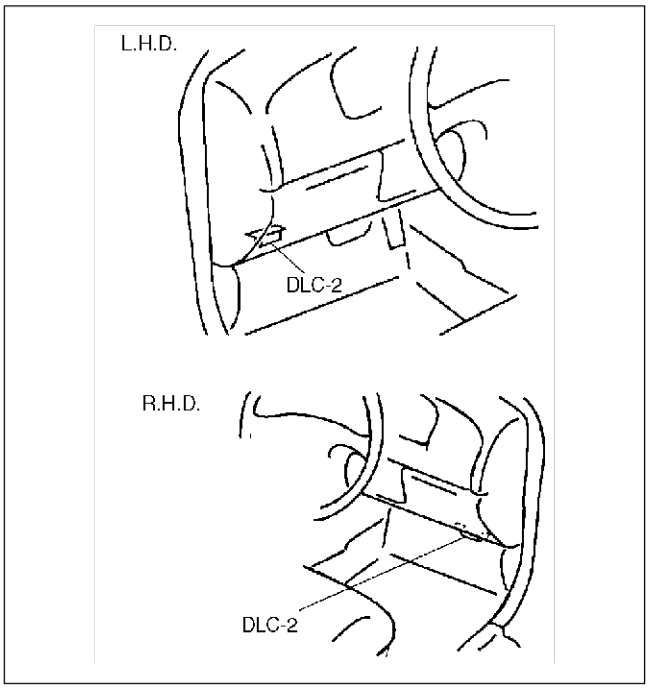

AME6975W002

Clearing DTCs Procedure

1. After repairs have been made, perform the **DTCs reading procedure**.
2. Erase DTC using WDS or equivalent.
3. Verify that the customer's concern has been resolved.

Note

- After repairing the ABS wheel-speed sensor or replacing ABS (ABS/TCS) HU/CM, the ABS warning light may not go off when ignition key is turned to ON. In this case, start engine and drive the vehicle at a speed of more than **10 km/h {6.2 mph}** until the ABS warning light goes off.

PID/Data Monitor and Record Procedure

1. Connect WDS or equivalent to the vehicle DLC-2 16-pin connector located on the left side of the steering column.
2. Access and monitor PIDs using WDS or equivalent.

Active Command Modes Procedure

Note
- When driving the ABS motor and each valve using avtive command mode, turn ABSVLVRLY ON, and then each command ON. ABSVLVRLY regulates the power supply for the ABS motor and all eight valves.

1. Connect WDS or equivalent to the vehicle DLC-2 16-pin connector located on the left side of the steering column.
2. Turn the ignition key to ON (Engine OFF) or start engine.
3. Activate active command modes using WDS or equivalent.

DTC Table

Note
- The following DTCs have been added due to adoption of TCS. Other DTCs are the same as previous MPV.

DTC		ABS warning light flashing pattern	Diagnosis system component	Page
WDS or equivalent	ABS warning light			
C1117	17		RPM input circuit failure	(See P–28 DTC C1117 (17))
C1118	82	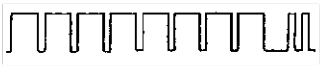	Traction control indicated torque reduction circuit failure	(See P–30 DTC C1118 (82))
C1119	83		Traction control actual torque reduction circuit failure	(See P–32 DTC C1119 (83))
U2021	87		Invalid/fault data received (non SCP)	(See P–34 DTC U2021 (87))

PID/DATA Monitor Table

PID Name (Definition)	Unit/Condition	Condition/Specification	Action	ABS HU/CM terminal
ABS_LAMP (ABS warning light output state)	ON/OFF	• ABS warning light is illuminated: ON • ABS warning light is illuminated: OFF	Inspect ABS warning light.	W
ABSLF_I (Left front ABS pressure retention solenoid valve output state)	ON/OFF	• During ABS and/or EBD control: ON/OFF (solenoid valve is activated/deactivated) • Not ABS and/or EBD control: OFF (solenoid valve is deactivated)	Internal fault of ABS HU/CM Replace ABS HU/CM. (See P–16 ABS/TCS HU/CM REMOVAL/INSTALLATION)	—
ABSLF_O (Left front ABS pressure reduction solenoid valve output state)	ON/OFF	• During ABS and/or EBD control: ON/OFF (solenoid valve is activated/deactivated) • Not ABS and/or EBD control: OFF (solenoid valve is deactivated)	Internal fault of ABS HU/CM Replace ABS HU/CM. (See P–16 ABS/TCS HU/CM REMOVAL/INSTALLATION)	—

P

PID Name (Definition)	Unit/Condition	Condition/Specification	Action	ABS HU/CM terminal
ABSLR_I (Left rear ABS pressure retention solenoid valve output state)	ON/OFF	• During ABS and/or EBD control: ON/OFF (solenoid valve is activated/deactivated) • Not ABS and/or EBD control: OFF (solenoid valve is deactivated)	Internal fault of ABS HU/CM Replace ABS HU/CM. (See P–16 ABS/TCS HU/CM REMOVAL/INSTALLATION)	—
ABSLR_O (Left rear ABS pressure reduction solenoid valve output state)	ON/OFF	• During ABS and/or EBD control: ON/OFF (solenoid valve is activated/deactivated) • Not ABS and/or EBD control: OFF (solenoid valve is deactivated)	Internal fault of ABS HU/CM Replace ABS HU/CM. (See P–16 ABS/TCS HU/CM REMOVAL/INSTALLATION)	—
ABS RF_I (Right front ABS pressure retention solenoid valve output state)	ON/OFF	• During ABS and/or EBD control: ON/OFF (solenoid valve is activated/deactivated) • Not ABS and/or EBD control: OFF (solenoid valve is deactivated)	Internal fault of ABS HU/CM Replace ABS HU/CM. (See P–16 ABS/TCS HU/CM REMOVAL/INSTALLATION)	—
ABSRF_O (Right front ABS pressure reduction solenoid valve output state)	ON/OFF	• During ABS and/or EBD control: ON/OFF (solenoid valve is activated/deactivated) • Not ABS and/or EBD control: OFF (solenoid valve is deactivated)	Internal fault of ABS HU/CM Replace ABS HU/CM. (See P–16 ABS/TCS HU/CM REMOVAL/INSTALLATION)	—
ABSRR_I (Right rear ABS pressure retention solenoid valve output state)	ON/OFF	• During ABS and/or EBD control: ON/OFF (solenoid valve is activated/deactivated) • Not ABS and/or EBD control: OFF (solenoid valve is deactivated)	Internal fault of ABS HU/CM Replace ABS HU/CM. (See P–16 ABS/TCS HU/CM REMOVAL/INSTALLATION)	—
ABSRR_O (Right rear ABS pressure reduction solenoid valve output state)	ON/OFF	• During ABS and/or EBD control: ON/OFF (solenoid valve is activated/deactivated) • Not ABS and/or EBD control: OFF (solenoid valve is deactivated)	Internal fault of ABS HU/CM Replace ABS HU/CM. (See P–16 ABS/TCS HU/CM REMOVAL/INSTALLATION)	—
BOO_ABS (Brake pedal switch input)	ON/OFF	• Brake pedal is depressed: ON • Brake pedal is released: OFF	Inspect brake switch.	Y
BRAKE_LMP (BRAKE system warning light output state)	ON/OFF	• BRAKE system warning light is illuminated: ON • BRAKE system warning light is not illuminated: OFF	Inspect BRAKE system warning light.	X
LF_WSPD (Left front ABS wheel-speed sensor input)	KPH/MPH	• Vehicle is stopped: **0 KPH {0 MPH}** • Indicate vehicle speed	Inspect ABS wheel-speed sensor/sensor rotor.	I, E
LR_WSPD (Left rear ABS wheel-speed sensor input)	KPH/MPH	• Vehicle is stopped: **0 KPH {0 MPH}** • Indicate vehicle speed	Inspect ABS wheel-speed sensor/sensor rotor.	C, F

PID Name (Definition)	Unit/Condition	Condition/Specification	Action	ABS HU/CM terminal
ABSPMPRLY (ABS motor relay output state)	ON/OFF	• During ABS and/or EBD control: ON/OFF (ABS motor is activated/ deactivated) • Not ABS and/or EBD control: OFF (ABS motor is deactivated)	Inspect ABS HU/CM connector and ABS HU/CM.	—
PMP_MOTOR (ABS motor output state)	ON/OFF	• During ABS and/or EBD control: ON/OFF (ABS motor is activated/ deactivated) • Not ABS and/or EBD control: OFF (ABS motor is deactivated)	Inspect ABS HU/CM connector and ABS HU/CM.	—
RF_WSPD (Right front ABS wheel-speed sensor input)	KPH/MPH	• Vehicle is stopped: **0 KPH {0 MPH}** • indicate vehicle speed	Inspect ABS wheel-speed sensor/sensor rotor.	G, D
RR_WSPD (Right rear ABS wheel-speed sensor input)	KPH/MPH	• Vehicle is stopped: **0 KPH {0 MPH}** • indicate vehicle speed	Inspect ABS wheel-speed sensor/sensor rotor.	A, B
ABSVLVRLY (Fail-safe relay output state)	ON/OFF	• Ignition key ON: ON • Other condition (Power supply circuit is open): OFF	Inspect ABS HU/CM connector and ABS HU/CM	—
RPM* (Engine speed)	RPM	• Engine stopped: • Engine idling: **650—750 RPM**	Inspect PCM. (See F3–83 PCM INSPECTION)	S
TRAC_SW* (TCS OFF switch)	ON/OFF	• TCS OFF switch is depressed: ON • TCS OFF switch is released: OFF	Inspect TCS OFF switch. (See P–22 TCS OFF SWITCH INSPECTION)	P
ABS_VOLT (System battery voltage value)	V	• Ignition key ON: **B+** • Idle: **B+**	Inspect power supply circuit. (See P–18 ABS/TCS HU/ CM INSPECTION)	Z

* : with TCS

Active Command Modes Table

Command Name	Definition	Operation	Note
PMP_MOTOR	ABS motor	ON/OFF	Ignition key at ON (Engine run, vehicle is not moving)
RF_OUTLET	Right front ABS pressure reduction solenoid valve	ON/OFF	
RF_INLET	Right front ABS pressure retention solenoid valve	ON/OFF	
LF_OUTLET	Left front ABS pressure reduction solenoid valve	ON/OFF	
LF_INLET	Left front ABS pressure retention solenoid valve	ON/OFF	
RR_OUTLET	Right rear ABS pressure reduction solenoid valve	ON/OFF	
RR_INLET	Right rear ABS pressure retention solenoid valve	ON/OFF	
LR_OUTLET	Left rear ABS pressure reduction solenoid valve	ON/OFF	
LR_INLET	Left rear ABS pressure retention solenoid valve	ON/OFF	
ABSVLVRLY	Fail-safe relay	ON/OFF	
CHK_TRAC*	Check traction control indicator	ON/OFF	
TRAC_OFF*	Traction control off indicator	ON/OFF	
ENG_TQR*	Engine torque reduction signal output	Nm	
VS_OUTPUT	Vehicle speed signal	KPH/MPH	

* : For TCS

Note

- When driving the ABS motor and each valve using avtive command mode, turn ABSVLVRLY ON, and then each command ON. ABSVLVRLY regulates the power supply for the ABS motor and all eight valves.

DTC C1117 (17)

AME697543000W04

Caution

- **When attaching the tester lead to the ABS/TCS HU/CM harness connector, the SST (49 G066 001) must be used. (See P–18 ABS/TCS HU/CM INSPECTION.)**

Note

- DTC C1117 (17) may be stored if the engine is stalled or the ignition key is turned to OFF while the vehicle is driving at **10 km/h {6.2 mph}** or more.

DTC C1117 (17)	Engine control system, engine speed signal line
DETECTION CONDITION	• Engine speed **0 rpm** and vehicle speed **10 km/h {6.2 mph}** continues for specified time.
POSSIBLE CAUSE	• Malfunction of engine control system • Malfunction of related wiring harness

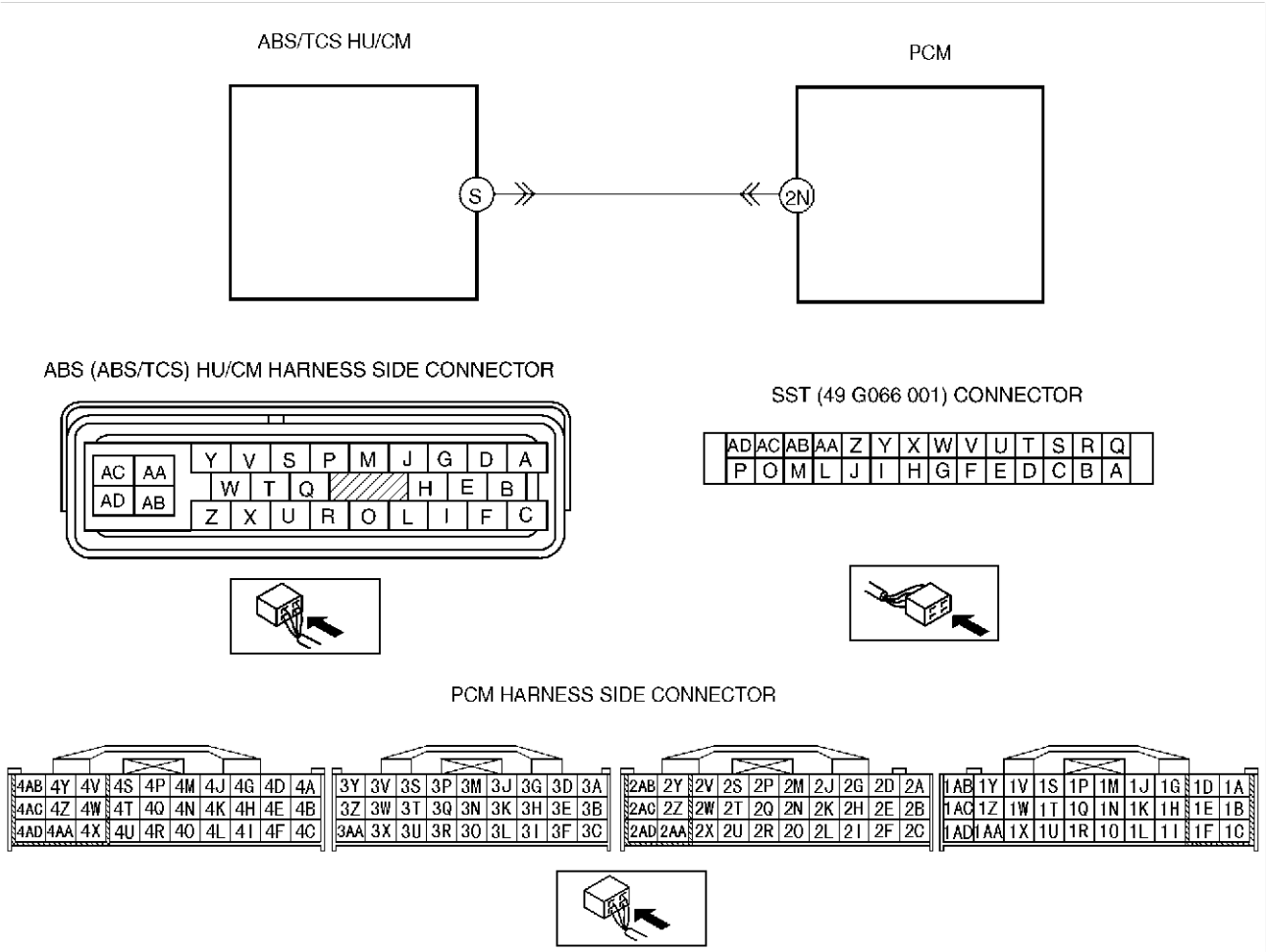

Diagnostic procedure

STEP	INSPECTION		ACTION
1	**INSPECT WIRING HARNESS BETWEEN ABS /TCS HU/CM AND DLC-2 FOR CONTINUITY AND SHORTS** • Turn ignition key to OFF. • Connect WDS or equivalent to DLC-2. • Turn ignition key to ON (engine OFF). • Perform DTC inspection. • Is error message displayed regarding communication between ABS/TCS HU/CM and WDS or equivalent?	Yes	If a communication error message is displayed even after inspecting according to procedures displayed on the WDS or equivalent, go to Step 4.
		No	Go to next step.
2	**CHECK FOR DTCs IN PCM** • Is DTC for engine control system obtained? (See F3–104 DTC TABLE)	Yes	Follow inspection procedures for engine control system.
		No	Go to next step.
3	**INSPECT RPM SIGNAL IN ABS/TCS HU/CM** • Inspect the following item using WDS or equivalent . — RPM (Engine speed) • Turn ignition key to ON (start engine) • Is engine speed **400—1500 rpm**?	Yes	Go to Step 5.
		No	Go to next step.
4	**INSPECT WIRING HARNESS BETWEEN ABS/ TCS HU/CM AND PCM FOR CONTINUITY** • Turn ignition key to OFF. • Disconnect ABS/TCS HU/CM and PCM connectors. • Connect **SST** (adapter harness) to ABS/TCS HU/CM connector (harness side). • Measure continuity between terminal S of **SST** (adapter harness) and terminal 2N of PCM connector (harness side). • Is there continuity?	Yes	Replace PCM then go to next step.
		No	Repair or replace harness between ABS/TCS HU/CM and PCM then go to next step.
5	**VERIFY CURRENT STATUS OF MALFUNCTION** • Clear DTC from memory. (See P–24 Clearing DTCs Procedure) • Start engine and drive vehicle at **10 km/h {6.2 mph}** or above. • Gradually slow down and stop vehicle. • Is the same DTC present?	Yes	Replace ABS/TCS HU/CM, then go to next step.
		No	Go to next step.
6	**VERIFY AFTER REPAIR PROCEDURE** • Is there any DTC present?	Yes	Go to applicable DTC inspection.
		No	Troubleshooting completed.

End Of Sie

P

DTC C1118 (82)

AME697543000W05

Caution

- **When attaching the tester lead to the ABS/TCS HU/CM harness connector, the SST (49 G066 001) must be used. (See P–18 ABS/TCS HU/CM INSPECTION.)**

DTC C1118 (82)	Engine control system, Torque reduction request signal line
DETECTION CONDITION	• After engine is warmed up, the signal that indicates torque reduction signal malfunction or engine control system malfunction is sent from PCM.
POSSIBLE CAUSE	• Malfunction of engine control system • Malfunction of related wiring harness

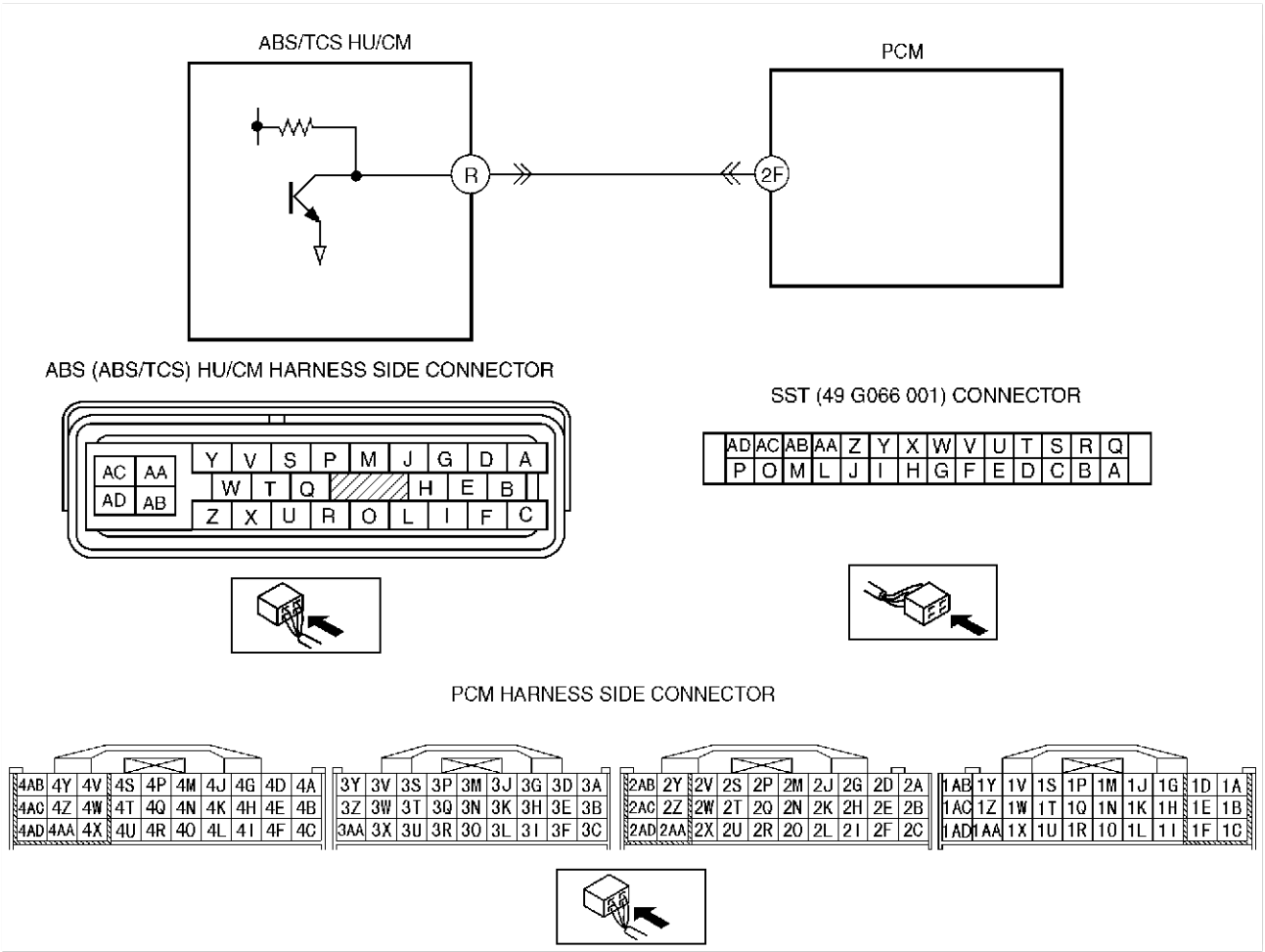

Diagnostic procedure

STEP	INSPECTION		ACTION
1	**INSPECT FOR DTCs IN PCM** • Turn ignition key to OFF. • Connect WDS or equivalent to DLC-2. • Turn ignition key to ON (engine OFF). • Is DTC for engine control system obtained? (See F3–104 DTC TABLE)	Yes	Follow inspection procedures for engine control system.
		No	Go to next step.
2	**VERIFY WHETHER MALFUNCTION IS IN WIRING HARNESS (BETWEEN TERMINAL R AND AA OF ABS/TCS HU/CM)** • Turn ignition key to OFF. • Connect ABS/TCS HU/CM connector. • Connect **SST** (adapter harness) to ABS/TCS HU/CM connector (harness side and ABS/TCS HU/CM side). • Turn ignition key to ON (engine OFF). • Measure voltage between terminal R and AA of **SST** (adapter harness). **Voltage** **5 V** • Is voltage as specified?	Yes	Go to Step 5.
		No	Go to next step.
3	**INSPECT WIRING HARNESS BETWEEN ABS/TCS HU/CM AND PCM FOR CONTINUITY** • Turn ignition key to OFF. • Disconnect **SST** (adapter harness) from ABS/TCS HU/CM (ABS/TCS HU/CM side) • Disconnect PCM connector. • Inspect for continuity between terminal R of **SST** (adapter harness) and terminal 2F of PCM connector (harness side). • Is there continuity?	Yes	Go to next step.
		No	Repair or replace harness then go to Step 6.
4	**INSPECT WIRING HARNESS BETWEEN TERMINAL R OF ABS/TCS HU/CM AND GROUND FOR SHORT TO GROUND** • Inspect for continuity between terminal R of **SST** (adapter harness) and ground. • Is there continuity?	Yes	Repair or replace harness, then go to Step 6.
		No	Replace PCM, then go to Step 6.
5	**INSPECT VOLTAGE PATTERN AT TERMINAL R OF ABS/TCS HU/CM** • Connect PCM connector and **SST** (adapter harness) to ABS/TCS HU/CM (ABS/TCS HU/CM side). • Turn ignition key to ON. • Inspect voltage pattern at ABS/TCS HU/CM terminal R using oscilloscope. 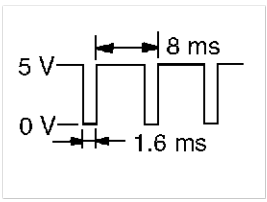 • Is voltage pattern as specified?	Yes	Go to next step.
		No	Replace ABS/TCS HU/CM, then go to next step.
6	**VERIFY TROUBLESHOOTING COMPLETED** • Make sure to reconnect all disconnected connectors. • Clear DTC from memory. (See P–24 Clearing DTCs Procedure) • Is the same DTC present?	Yes	Replace ABS/TCS HU/CM, then go to next step.
		No	Go to next step.
7	**VERIFY AFTER REPAIR PROCEDURE** • Is there any DTC present?	Yes	Go to applicable DTC inspection.
		No	Troubleshooting completed.

P

DTC C1119 (83)

AME697543000W06

Caution

- **When attaching the tester lead to the ABS/TCS HU/CM harness connector, the SST (49 G066 001) must be used. (See P–18 ABS/TCS HU/CM INSPECTION.)**

DTC C1119 (83)	Torque reduction inhibit signal line
DETECTION CONDITION	• After engine is started, malfunction of torque reduction inhibit signal line is detected.
POSSIBLE CAUSE	• Open or short circuit of torque reduction inhibit line

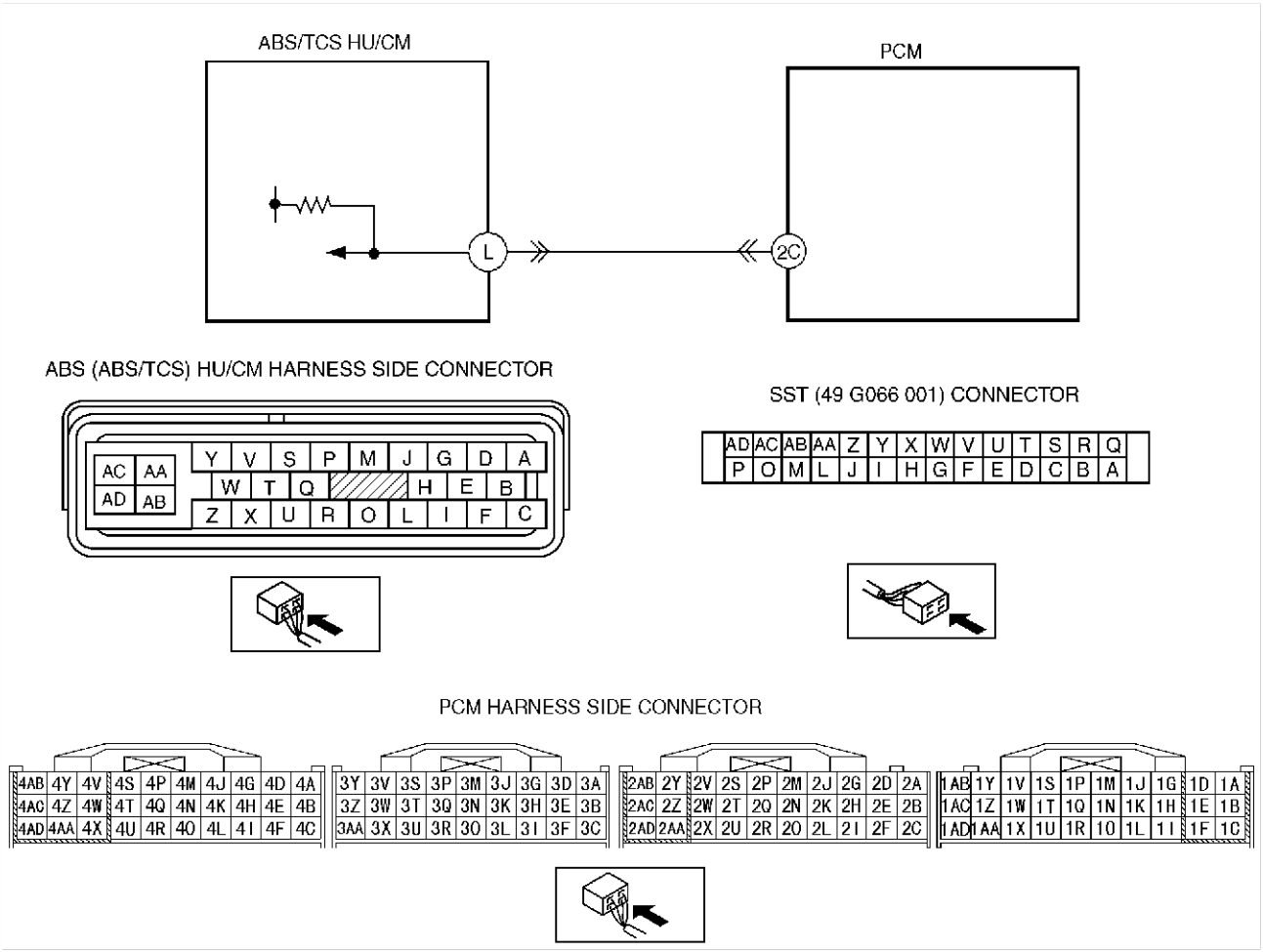

Diagnostic procedure

STEP	INSPECTION		ACTION
1	**VERIFY WHETHER MALFUNCTION IS IN WIRING HARNESS (BETWEEN 2C TERMINAL OF PCM AND GROUND)** • Turn ignition key to OFF. • Disconnect PCM connector. • Turn ignition key ON (engine OFF). • Measure voltage between terminal 2C of PCM connector (harness side) and GND. **Voltage** **Approx. 5 V** • Is voltage as specified?	Yes	Go to Step 4.
		No	Go to next step.
2	**INSPECT WIRING HARNESS BETWEEN ABS/TCS HU/CM AND PCM FOR CONTINUITY** • Turn ignition key to OFF. • Disconnect ABS/TCS HU/CM connector. • Connect **SST** (adapter harness) to ABS/TCS HU/CM (harness side). • Inspect for continuity between terminal 2C of PCM harness side and terminal L of **SST** (adapter harness). • Is there continuity?	Yes	Go to next Step.
		No	Repair or replace harness, then go to Step 5.
3	**INSPECT WIRING HARNESS BETWEEN 2C TERMINAL OF PCM AND GROUND FOR SHORT TO GROUND** • Inspect continuity between terminal 2C of PCM harness side and ground. • Is there continuity?	Yes	Repair or replace harness, then go to Step 5.
		No	Go to Step 5.
4	**INSPECT VOLTAGE PATTERN AT TERMINAL L OF ABS/TCS HU/CM** • Connect PCM connector and **SST** (adapter harness) to ABS/TCS HU/CM (ABS/TCS HU/CM side). • Turn ignition key to ON. • Inspect voltage pattern at ABS/TCS HU/CM terminal L using oscilloscope. 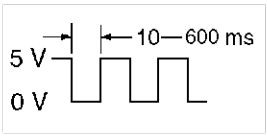 • Is voltage pattern as specified?	Yes	Go to Step 5.
		No	Replace PCM, then go to Step 5.
5	**VERIFY TROUBLESHOOTING COMPLETED** • Clear DTC from memory. (See P–24 Clearing DTCs Procedure) • Is the same DTC present?	Yes	Replace ABS/TCS HU/CM, then go to next step.
		No	Go to next step.
6	**VERIFY AFTER REPAIR PROCEDURE** • Is there any DTC present?	Yes	Go to applicable DTC inspection.
		No	Troubleshooting completed.

End Of Sie

P

DTC U2021 (87)

AME697543000W07

Note
- To warm up the engine completely, idle the engine and wait for **5 minutes or more**.

DTC U2021 (87)	**Engine coolant temperature is 0 °C {32 °F} or less.**
DETECTION CONDITION	• After engine is warmed up, engine coolant temperature is **0 °C {32 °F}** or less, and TCS operation is inhibited by PCM. • DTC is not stored.
POSSIBLE CAUSE	• System is normal. When engine coolant temperature rises, TCS operation is executed by PCM.

Diagnostic procedure

STEP	INSPECTION		ACTION
1	**CHECK WHETHER ENGINE IS WARMED UP OR NOT** • Is it engine warmed up?	Yes	Go to next step.
		No	Warm up the engine. If TCS OFF light goes out, system is normal.
2	**VERIFY THAT MALFUNCTION SYMPTOM OCCURS AFTER ENGINE IS WARMED UP** • Warm up the engine. • Is TCS indicator light also illuminated and DTC C1118 (82) obtained?	Yes	Go to DTC C1118 (82) chart.
		No	If TCS OFF light goes out, system is normal. If TCS OFF light does not go out, go to next step.
3	**VERIFY TROUBLESHOOTING COMPLETED** • Make sure to reconnect all disconnected connectors. • Clear DTC from memory. (See P–24 Clearing DTCs Procedure) • Is the same DTC present?	Yes	Replace ABS/TCS HU/CM, go to next step.
		No	Go to next step.
4	**VERIFY AFTER REPAIR PROCEDURE** • Is there any DTC present?	Yes	Go to applicable DTC inspection.
		No	Troubleshooting completed.

End Of Sie

TROUBLESHOOTING (ABS/TCS)

ABS/TCS SYSTEM DIAGRAM

AME698543000W01

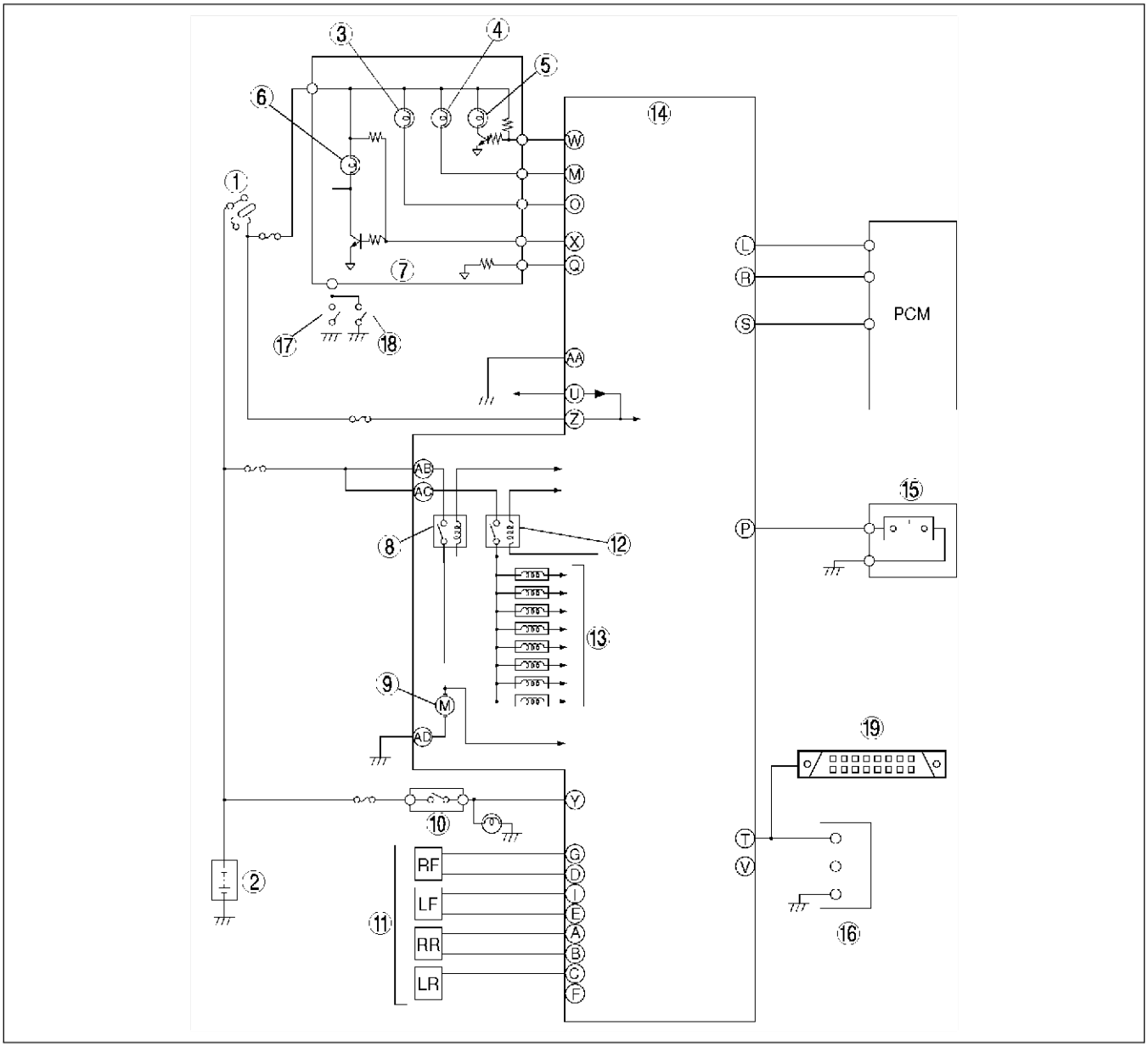

AME6918W001

1	Ignition switch
2	Battery
3	TCS OFF light
4	TCS indicator light
5	ABS warning light
6	BRAKE system warning light
7	Instrument cluster
8	Motor relay
9	ABS motor
10	Brake switch

11	ABS wheel-speed sensor
12	Fail-safe relay
13	Solenoid valve
14	ABS/TCS HU/CM
15	TCS OFF switch
16	Data link connector (DLC)
17	Parking brake switch
18	Brake fluid level sensor
19	Data link connector-2 (DLC-2)

End Of Sub

P

FORWARD

AME698543000W02

- Before performing the steps in Symptom Troubleshooting, perform the On-board Diagnostic Test. To check the DTC, follow the OBD TEST steps.

End Of Sie

PRECAUTION

AME698543000W03

When inspecting or servicing the ABS/TCS, note the following points:

Vehicles with ABS

1. The ABS warning light and/or BRAKE system warning light may illuminate even when the system is normal, depending on the driving conditons and details of work performed.

Warning lights that may illuminate	Cases in which the light may illuminate	Condition in which the light will go out	ABS and EBD control
• ABS warning light • BRAKE system warning light (*1)	Under any of the following conditions: • When the front wheels are jacked up, stuck, or placed on a chassis roller, and only the front wheel ABS wheel speed sensors are spun for **more than 20 seconds**.	After turning ignition switch to OFF, vehicle is driven at speed **greater than 10 km/h {6.2 mph}** and normal operation is confirmed.	• ABS: Cuts control. • EBD: 1. Cuts control, in cases where the light may illuminate, only when ABS HU/CM detects that a rear wheel speed sensor is malfunctioning. 2. Wheel speed sensor determines that more than 3 wheels are functioning correctly.
	Parking brake is not fully released while driving.		
	Brake drag.		
	Sudden acceleration/ deceleration.		
	Left/ right or front/ rear tires are different. (Size, radius, tire pressure, or wear is other than that listed on tire label.)		
• ABS warning light • BRAKE system warning light	Battery voltage at ABS HU/ CM ignition terminal Z drops **below about 8.5V**. (*2)	Battery voltage rises **above about 8.5V**. (Only BRAKE system warning light goes out.)	ABS: Cuts control. EBD: Cuts control.
• ABS warning light	Battery voltage at ABS HU/ CM ignition terminal Z is **below about 10 and above about 8.5V**. (*2)	Battery voltage rises **above about 10 V**.	ABS: Operates control. EBD: Operates control.

*1 : In cases where the light may illuminate, only when ABS HU/CM detects that a rear wheel's speed sensor is malfunctioning.

*2 : If battery voltage drops **below about 9 to 10 V** while vehicle speed is **greater than 6 km/h {3.7 mph}**, ABS HU/CM records **DTC B1318 (63)**.

2. Precautions during servicing of ABS
   The ABS is composed of electrical and mechanical parts. It is necessary to categorize malfunctions as being either electrical or hydraulic when performing troubleshooting.
   (1) Malfunctions in electrical system
   - The ABS HU/CM has an on-board diagnostic function. With this function, the ABS warning light and/or BRAKE system warning light will come on when there is a problem in the electrical system. Also, past and present malfunctions are recorded in the ABS HU/CM. This function can find malfunctions that do not occur during periodic inspections. Turn the ignition switch ON by connecting the **SST** (WDS or equivalent) to the DLC-2 inside the Passenger comportment. **Approximately 5 seconds** later the stored malfunctions will be displayed in the order of occurrence. To find out the causes of ABS malfunctions, use these on-board diagnostic results.
   - If a malfunction occurred in the past but is now normal, the cause is likely a temporary poor connection of the harness. The ABS HU/CM usually operates normally. Be careful when searching for the cause of malfunction.
   - After repair, it is necessary to erase the DTC from the ABS HU/CM memory. Also, if the ABS related parts have been replaced, verify that no DTC has been displayed after repairs.
   - After repairing the ABS wheel-speed sensor or ABS sensor rotor, or after replacing the ABS HU/CM (ABS motor or ABS motor relay or solenoid valve), the ABS warning light may not go off even when the ignition switch is turned ON. In this case, drive the vehicle at a speed of more than **10km/h {6.2 mph}**, make sure the ABS warning light goes off, and then erase the DTC.
   - When repairing, if the ABS related connectors are disconnected and the ignition switch is turned ON, the ABS HU/CM will mistakenly detect a fault and record it as a malfunction.
   - To protect the ABS HU/CM, make sure the ignition switch is turned to OFF before connecting or disconnecting the ABS HU/CM connector.
   - To protect the terminal, use the **SST** (adapter harness) (49 G066 001) when connecting the tester lead to the ABS HU/CM connector.

   (2) Malfunctions in hydraulic system
   - Symptoms in a hydraulic system malfunction are similar to those in a conventional brake malfunction. However, it is necessary to determine if the malfunction is in an ABS component or the conventional brake system.
   - The ABS HU/CM contains delicate mechanical parts. If foreign material gets into the component, the ABS may fail to operate. Also, it will likely become extremely difficult to find the location of the malfunction in the event that the brakes operate but the ABS does not. Make sure foreign material does not get inside when servicing the ABS (e.g. brake fluid replacement, pipe removal).

Vehicles with ABS/TCS

1. The ABS warning light, BRAKE system warning light, TCS indicator light and/or TCS OFF light illuminate even when the system is normal.
   The ABS warning light, BRAKE system warning light, TCS indicator light and/or TCS OFF light may illuminate, even when the system is normal, depending on the driving conditions and details of work performed.

Warning lights that may illuminate and/or flash	Cases in which the light may illuminate	Condition in which the light will go out	ABS and TCS control
All or any the following lights illuminate: • ABS warning light • BRAKE system warning light	Under any of the following conditions: • When the front wheels are jacked up, stuck, or placed on a chassis roller, and only the front wheel ABS wheel speed sensors are spun for more than **60 seconds.**	After turning ignition switch to OFF, vehicle is driven at speed greater than **10 km/h {6.2 mph}** and normal operation is confirmed.	• ABS: Cuts control. • TCS: Cuts control. • EBD: 1. Cuts control, in cases where the light may illuminate, only when ABS/TCS HU/CM detects that a wheel speed sensor determines that more than the two rear wheels are malfunctioning. 2. Operates control, if wheel speed sensor determines that more than 3 wheels are functioning correctly.
	Parking brake is not fully released while driving.		
	Brake drags		
	Sudden acceleration/ deceleration.		

P

Warning lights that may illuminate and/or flash	Cases in which the light may illuminate	Condition in which the light will go out	ABS and TCS control
All the following lights illuminate: • ABS warning light • BRAKE system warning light	Left/right or front/rear tires are different. (Size, radius, tire pressure, or wear is other than that listed on tire label.)	After turning ignition switch OFF, vehicle is driven at speed greater than **10 km/h {6.2 mph}** and normal operation is confirmed.	• ABS: Cuts control. • TCS: Cuts control. • EBD: 1. Cuts control, in cases where the light may illuminate, only when ABS/TCS HU/CM detects that a wheel speed sensor determines that more than the two rear wheels are malfunctioning. 2. Operates control, if wheel speed sensor determines that more than 3 wheels are functioning correctly.
All the following lights illuminate: • ABS warning light • BRAKE system warning light	Battery voltage at ABS/TCS HU/CM ignition terminal Z drops below **approx. 10 V**. (*1)	Battery voltage rises above **approx. 10 V**.	• ABS: Operates control. • TCS: Operates control. • EBD: Operates control.
All the following lights illuminate: • TCS OFF light • TCS indicator light	When the engine coolant temperature is below **0 °C {32 °F}**. (*2)	When engine is started and engine coolant temperature rises above **0 °C {32 °F}**.	• ABS: Cuts control. • EBD: Cuts control. • TCS: 1. If TCS is operating, cuts control after gradually releasing TCS control value. 2. If TCS is not operating, cuts control.
All the following lights illuminate: • ABS warning light • BRAKE system warning light	When performing ABS ON-BOARD DIAGNOSTIC SYSTEM using ABS warning light while driving vehicle.	Under either of the following conditions: • When vehicle is stopped (*3) • When ABS ON-BOARD DIAGNOSTIC SYSTEM is released	• ABS: Operates control. • TCS: Operates control. • EBD: Operates control.
All the following lights flash: • ABS warning light • BRAKE system warning light • TCS OFF light	When confirming DTCs or PID/DATA items using WDS or equivalent.	When ABS ON-BOARD DIAGNOSTIC SYSTEM is released.	• ABS: Cuts control. • TCS: Cuts control. • EBD: Cuts control.
	When performing ACTIVE COMMAND MODES using WDS or equivalent.	When ABS ON-BOARD DIAGNOSTIC SYSTEM is released.	• ABS: Cuts control. • TCS: Cuts control. • EBD: Cuts control.

*1 : If battery voltage drops below **10 V** while vehicle speed is greater than **6 km/h {3.7 mph}**, ABS/TCS HU/CM records **DTC B1318 (63)**.
*2 : DTC U2021 (87) for past malfunction is not recorded in the ABS/TCS HU/CM. DTC U2021 (87) for present malfunction is displayed, then goes out when engine coolant temperature rises above **0 °C {32 °F}**.
*3 : When malfunctions that display DTCs occur, the ABS warning light flashes.

Warning lights that may illuminate and/or flash	Cases in which the light may illuminate	Condition in which the light will go out	ABS and TCS control
The following light illuminates: • TCS OFF light	Until **1 second** after starting the engine.	More than **1 second** after starting the engine.	• ABS: Cuts control. • TCS: Cuts control. • EBD: Cuts control.

2. Precautions during servicing of ABS/TCS
   The ABS/TCS is composed of electrical and mechanical parts. It is necessary to categorize malfunctions as being either electrical or hydraulic when performing troubleshooting.
   (1) Malfunctions in electrical system
   - The ABS/TCS HU/CM has an on-board diagnostic function. With this function, the ABS warning light, BRAKE system warning light, TCS indicator light, and TCS OFF light illuminate when there is a problem in the electrical system. Also, past and present malfunctions are recorded in the ABS/TCS HU/CM. This function can find malfunctions that do not occur during periodic inspections. Turn the ignition switch ON by connecting the **SST** (WDS or equivalent) to the DLC-2 inside the Passenger comportment. **Approximately 5 seconds** later the stored malfunctions will be displayed in the order of occurrence. To find out the causes of ABS/TCS malfunctions, use these on-board diagnostic results.
   - If a malfunction occurred in the past but is now normal, the cause is likely a temporary poor connection of the harness. The ABS/TCS HU/CM usually operates normally. Be careful when searching for the cause of malfunction.
   - After repair, it is necessary to erase the DTC from the ABS/TCS HU/CM memory. Also, if the ABS/TCS related parts have been replaced, verify that no DTC is displayed after repairs.
   - After repairing the ABS wheel-speed sensor or ABS sensor rotor, or after replacing the ABS/TCS HU/CM (ABS motor or ABS motor relay or solenoid valve), the ABS warning light, BRAKE system warning light, TCS indicator light, and/or TCS OFF light may not go off even when the ignition switch is turned to ON. In this case, drive the vehicle at a speed of more than **10 km/h {6.2 mph}**, make sure the ABS warning light, BRAKE system warning light, TCS indicator light, and TCS OFF light go off, and then erase the DTC.
   - When repairing, if the ABS/TCS related connectors are disconnected and the ignition switch is turned ON, the ABS/TCS HU/CM will mistakenly detect a fault and record it as a malfunction.
   - To protect the ABS/TCS HU/CM, make sure the ignition switch is OFF before connecting or disconnecting the ABS/TCS HU/CM.
   - To protect the terminal, use the **SST** (adapter harness) (49 G066 001) when connecting the tester lead to the ABS/TCS HU/CM connector.

   (2) Malfunctions in hydraulic system
   - Symptoms in a hydraulic system malfunction are similar to those in a conventional brake malfunction. However, it is necessary to determine if the malfunction is in an ABS component or the conventional brake system.
   - The ABS/TCS HU/CM contains delicate mechanical parts. If foreign materials get into the component, the ABS may fail to operate. Also, it will likely become extremely difficult to find the location of the malfunction in the event that the brakes operate but the ABS does not. Make sure foreign materials do not get inside when servicing the ABS (e.g. brake fluid replacement, pipe removal).

End Of Sta

SYMPTOM TROUBLESHOOTING

AME698543000W04

- Verify the symptom, and perform troubleshooting according to the appropriate number.

Vehicles with ABS

No.	TROUBLESHOOTING ITEM
1	ABS warning light does not illuminate.
2	BRAKE system warning light does not illuminate.
3	ABS warning light and BRAKE system warning light stay on.
4	ABS warning light stays on.
5	BRAKE system warning light stays on.
6	ABS and BRAKE system warning lights come on when driving.
7	ABS warning light comes on when driving.
8	ABS and BRAKE system warning lights go on and off.
9	ABS warning light goes on and off.
10	BRAKE system warning light goes on and off.
11	BRAKE system malfunction.

Vehicles with ABS/TCS

No.	Symptom
1	ABS warning light stays on more than 4 seconds with ignition switch ON.
2	ABS warning light does not illuminate with ignition switch ON.
3	BRAKE system warning light stays on more than 4 seconds with ignition switch ON. (Parking brake is released.)
4	BRAKE system warning light does not illuminate with ignition switch ON.
5	ABS warning light, BRAKE system warning light, TCS indicator light and TCS OFF light do not illuminate with ignition switch ON.
6	TCS indicator light does not illuminate with ignition switch ON.
7	TCS OFF light does not illuminate with ignition switch ON.
8	TCS indicator light stays on more than 4 seconds with ignition switch ON.
9	TCS OFF light stays on more than 4 seconds with ignition switch ON.
10	There is a malfunction in system even though ABS warning light, BRAKE system warning light, TCS indicator light and TCS OFF light indicate that the system is normal.

Vehicle with ABS

Possible factor / Troubleshooting item	ABS HU/CM	Instrument cluster	ABS warning light circuit	BRAKE system warning light circuit	Battery	Brake fluid	Brake fluid level sensor	Parking brake switch	Charging system	ABS HU/CM power supply	ABS HU/CM GND 1	Instrument cluster power supply	Instrument cluster GND	Conventional brake	Brake pipe routing
ABS warning light does not illuminate.	×	×	×									×	×		
BRAKE system warning light does not illuminate.	×	×		×								×	×		
ABS warning light and BRAKE system warning light stay on.	×	×	×	×	×				×	×	×				
ABS warning light stays on.	×	×	×		×				×	×	×				
BRAKE system warning light stays on.	×	×	×	×		×	×	×		×	×				
ABS and BRAKE system warning lights come on when driving.	×									×	×				
ABS warning light comes on when driving.	×	×	×		×				×	×	×				
ABS and BRAKE system warning lights go on and off.	×	×	×	×	×				×	×	×				
ABS warning light goes on and off.	×	×	×		×				×	×	×				
BRAKE system warning light goes on and off.	×	×		×		×	×	×		×	×				
BRAKE system malfunction.														×	×

YMU403WA1

Vehicle with ABS/TCS

×: Applicable

	Troubleshooting Item	Possible factor															
		ABS/TCS HU/CM	Instrument cluster	ABS warning light circuit	Battery	Charging system	TCS indicator light circuit	TCS OFF light circuit	TCS OFF switch circuit	Instrument cluster power supply (Terminal 3A)	Instrument cluster GND (Terminal 2T, Terminal 2V)	Tire size, tire air pressure	PCM system(Traction control system)	ABS/TCS HU/CM power supply (Terminal Z)	ABS/TCM HU/CM GND 1 (Terminal AA)	Conventional brake	Brake pipe routing	BRAKE system warning light circuit
1	ABS warning light stays on more than 4 seconds with ignition switch on.	×	×	×	×	×								×	×			
2	ABS warning light does not illuminate with ignition switch on.	×	×	×							×							
3	BRAKE system warning light stays on for more than 4 seconds with ignition switch on.	×	×		×	×								×	×			×
4	BRAKE system warning light does not illuminate with ignition switch on.	×	×							×	×							×
5	ABS warning light, BRAKE system warning light, TCS indicator light and TCS OFF light do not illuminate with ignition switch on.		×							×								
6	TCS indicator light does not illuminate with ignition switch on.	×	×				×											
7	TCS OFF light does not illuminate with ignition switch on.	×	×					×										
8	TCS indicator light stays on more than 4 seconds with ignition switch on.	×	×				×											
9	TCS OFF light stays on more than 4 seconds with ignition switch on.	×	×					×	×									
10	There is a malfunction in system even though ABS warning light, BRAKE system warning light,TCS indicator light and TCS OFF light indicate that the system is normal.	×														×	×	

YLE6988W002

End Of Ste

P

NO.1 ABS WARNING LIGHT DOES NOT ILLUMINATE

AME698543000W05

- When performing an asterisked (*) troubleshooting inspection, shake the wiring harness and connectors while doing the inspection to discover whether poor contact points are the cause of any intermittent malfunctions. If there is a problem, check to make sure connectors, terminals and wiring harness are connected correctly and undamaged.

1	ABS warning light does not illuminate
[TROUBLESHOOTING HINTS] • **ABS warning light circuit open or shorted to ground.**	

Diagnostic procedure

STEP	INSPECTION		ACTION
1	• Do other warning and indicator lights illuminate when IG switch is turned ON?	Yes	Go to next step.
		No	Inspect or repair instrument cluster power supply system (instrument cluster terminal 3J).
2	• Turn ignition switch ON. • Turn signal switch to turned ON. • Does turn signal indicator light in instrument cluster illuminate?	Yes	Go to Step 4.
		No	Go to next step.
*3	• Turn ignition switch OFF. • Disconnect instrument cluster connector. • Is there continuity between instrument cluster connector (24–pin) terminal 3D and ground?	Yes	Reconnect instrument cluster connector, go to next step.
		No	Repair wiring harness between instrument cluster and ground.
4	• Disconnect ABS HU/CM connector and turn ignition switch ON. • Does ABS warning light illuminate?	Yes	Replace ABS HU/CM (ground to short in ABS HU/CM).
		No	Go to next step.
5	• Remove instrument cluster. • Inspect ABS warning light bulb. • Is it okay?	Yes	Go to next step.
		No	Replace ABS warning light bulb.
*6	• Is there continuity between instrument cluster connector (16–pin) terminal 1B and ground?	Yes	Repair wiring harness between instrument cluster and ABS HU/CM.
		No	Replace instrument cluster.

NO.2 BRAKE SYSTEM WARNING LIGHT DOES NOT ILLUMINATE

AME698543000W06

- When performing an asterisked (*) troubleshooting inspection, shake the wiring harness and connectors while doing the inspection to discover whether poor contact points are the cause of any intermittent malfunctions. If there is a problem, check to make sure connectors, terminals and wiring harness are connected correctly and undamaged.

2	BRAKE system warning light does not illuminate
[TROUBLESHOOTING HINTS] • **Open or short to ground in BRAKE system warning light circuit.**	

Diagnostic procedure

STEP	INSPECTION		ACTION
1	• Do other warning and indicator lights illuminate when IG switch is turned ON?	Yes	Go to next step.
		No	Inspect or repair instrument cluster power supply system (instrument cluster terminal 3J).
2	• Turn ignition switch ON. • Turn signal switch to turned ON. • Does turn signal indicator light in instrument cluster illuminate?	Yes	Go to Step 4.
		No	Go to next step.
*3	• Turn ignition switch OFF. • Disconnect instrument cluster connector. • Is there continuity between instrument cluster connector (24–pin) terminal 3D and ground?	Yes	Reconnect instrument cluster connector, go to next step.
		No	Repair wiring harness between instrument cluster and ground.
4	• Disconnect ABS HU/CM connector and turn ignition switch ON. • Does BRAKE system warning light illuminate?	Yes	Replace ABS HU/CM (ground to short in ABS HU/CM).
		No	Go to next step.
5	• Remove instrument cluster. • Inspect BRAKE system warning light bulb. • Is it okay?	Yes	Go to next step.
		No	Replace BRAKE system warning light bulb.
*6	• Is there continuity between instrument cluster connector (24–pin) terminal 3S and ground?	Yes	Repair wiring harness between instrument cluster and ABS HU/CM.
		No	Replace instrument cluster. (Open or ground to short in ABS HU/CM.)

NO.3 ABS WARNING LIGHT AND BRAKE SYSTEM WARNING LIGHT STAY ON

AME698543000W07

- When performing an asterisked (*) troubleshooting inspection, shake the wiring harness and connectors while doing the inspection to discover whether poor contact points are the cause of any intermittent malfunctions. If there is a problem, check to make sure connectors, terminals and wiring harness are connected correctly and undamaged.

3	**ABS warning light and BRAKE system warning light stay ON**

[TROUBLESHOOTING HINTS]

- **ABS HU/CM detects ABS proportioning system malfunction**
- **ABS HU/CM detects low voltage in power supply (ABS HU/CM terminal Z voltage is below about 8.5 V.)**
- **ABS HU/CM does not operate**
- **Both warning light circuits (ABS and BRAKE system) open**

Diagnostic procedure

STEP	INSPECTION		ACTION
1	• Perform DTC inspection. • Is error message displayed regarding communication between ABS HU/CM and WDS or equivalent?	Yes	If a communication error message is displayed even after inspecting according to procedures displayed on the WDS or equivalent, go to Step 7.
		No	Go to next step.
2	• Have DTCs been recorded in memory?	Yes	Perform inspection using appropriate DTC.
		No	Go to next step.
3	• Inspect the following items using WDS or equivalent. — ABS_LAMP (ABS warning light) — BRAKE_LMP (BRAKE system warning light) — ABS_VOLT (power supply voltage) • Is ABS_LAMP and/or BRAKE_LMP on after more than 4 seconds with ignition switch ON?	Yes	Go to Step 6.
		No	Go to next step.
*4	• Disconnect ABS HU/CM connector. Connect **SST** (adapter harness) (vehicle harness side only). • Use the **SST** (adapter harness) connector to ground the warning light terminal (ABS: terminal W, BRAKE system: terminal X) to body ground. • Do both ABS warning light and BRAKE system warning light go out with ignition switch ON?	Yes	Replace ABS HU/CM (open circuit in ABS HU/CM).
		No	Go to next step.
*5	• Is there continuity between following **SST** (adapter harness) connector terminals and instrument cluster connector (16–pin, 24–pin) terminals? — Terminal W and 1B — Terminal X and 3S	Yes	Replace instrument cluster (open or ground to short in instrument cluster).
		No	Repair wiring harness between ABS HU/CM (ABS warning light: terminal W, BRAKE system warning light: terminal X) and instrument cluster.
6	• Check the voltage for PID/DATA monitor ABS_VOLT item. **Specification: above 10 V** • Is voltage within specification?	Yes	Replace ABS HU/CM (open or short circuit to B+ in ABS HU/CM).
		No	Go to next step.
7	• Is battery voltage normal?	Yes	Go to next step.
		No	Perform inspection of battery and charging system.
8	• Is battery voltage normal with electrical load (A/C, headlights, etc.) on while engine is idling?	Yes	Go to next step.
		No	Perform inspection of charging system (drive belt tension, generator, etc.).
9	• Is ABS HU/CM connector securely connected?	Yes	Go to Step 11.
		No	Connect ABS HU/CM connector securely, then go to next step.
10	• Do both ABS warning light and BRAKE system warning lights go out after more than **4 seconds** with ignition switch ON?	Yes	Temporary poor connection in ABS HU/CM connector. Inspect connector and terminal.
		No	Inspect and repair wiring harness for ABS HU/CM power supply (terminal Z) and ground 1 (terminal AA).

P

STEP	INSPECTION		ACTION
*11	• Disconnect ABS HU/CM connector. Connect **SST** (adapter harness) (vehicle harness side only). • Is there continuity between **SST** (adapter harness) connector terminal T and DLC-2?	Yes	Go to next step.
		No	Repair wiring harness between ABS HU/CM and DLC-2.
*12	• Is voltage **approximately 12 V** at **SST** (adapter harness) connector terminal T?	Yes	Repair wiring harness between ABS HU/CM and DLC-2.
		No	Go to next step.
*13	• Is there continuity between **SST** (adapter harness) connector terminal T and ground?	Yes	Repair wiring harness between ABS HU/CM and DLC-2.
		No	Inspect and repair wiring harness for ABS HU/CM power supply (terminal Z) and ground 1 (terminal AA).

NO.4 ABS WARNING LIGHT STAYS ON

AME698543000W08

- When performing an asterisked (*) troubleshooting inspection, shake the wiring harness and connectors while doing the inspection to discover whether poor contact points are the cause of any intermittent malfunctions. If there is a problem, check to make sure connectors, terminals and wiring harness are connected correctly and undamaged.

4	ABS warning light stays on

[TROUBLESHOOTING HINTS]
- **ABS HU/CM detects ABS system malfunction.**
- **ABS HU/CM detects low voltage in power supply (ABS HU/CM terminal Z voltage is below about 10 V or above about 8.5 V).**
- **Warning light circuit open**

Diagnostic procedure

STEP	INSPECTION		ACTION
1	• Perform DTC inspection. • Is error message displayed regarding communication between ABS HU/CM and WDS or equivalent?	Yes	If a communication error message is displayed even after inspecting according to procedures displayed on WDS or equivalent, go to Step 7.
		No	Go to next step.
2	• Have DTCs been recorded in memory?	Yes	Perform inspection using appropriate DTC.
		No	Go to next step.
3	• Inspect the following items using WDS or equivalent. — ABS_LAMP (ABS warning light) — ABS_VOLT (power supply voltage) • Is ABS_LAMP on after more than **4 seconds** with ignition switch ON?	Yes	Go to Step 6.
		No	Go to next step.
*4	• Disconnect ABS HU/CM connector. Connect **SST** (adapter harness) (vehicle harness side only). • Use the **SST** (adapter harness) connector to ground ABS warning light terminal W to body ground. • Does ABS warning light go out with ignition switch ON?	Yes	Replace ABS HU/CM (open circuit in ABS HU/CM).
		No	Go to next step.
*5	• Is there continuity between following **SST** (adapter harness) connector terminal W and instrument cluster connector (16–pin) terminal 1B?	Yes	Replace instrument cluster (open or ground to short in instrument cluster).
		No	Repair wiring harness between ABS HU/CM (terminal W) and instrument cluster.
6	• Check the voltage for PID/DATA monitor ABS_VOLT item. **Specification: above more than 10V** • Is voltage at specification?	Yes	Replace ABS HU/CM (open or ground to short in ABS HU/CM).
		No	Go to next step.
7	• Is battery voltage normal?	Yes	Go to next step.
		No	Perform inspection of battery and charging system.
8	• Is battery voltage normal with electrical load (A/C, headlights, etc.) on while engine is idling?	Yes	Go to next step.
		No	Perform inspection of charging system (drive belt tension, generator, etc.).
9	• Is ABS HU/CM connector terminal W securely connected?	Yes	Go to Step 11.
		No	Connect ABS HU/CM connector terminal W securely, then go to next step.

STEP	INSPECTION		ACTION
10	• Does ABS warning light go out after more than **4 seconds** with ignition switch ON?	Yes	Temporary poor connection of terminal. Inspect ABS HU/CM connector and terminal.
		No	Inspect and repair wiring harness for ABS HU/CM power. Supply (terminal Z) and ground 1 (terminal AA).
*11	• Disconnect ABS HU/CM connector. Connect **SST** (adapter harness) (vehicle harness side only). • Is there continuity between **SST** (adapter harness) connector terminal T and DLC-2?	Yes	Go to next step.
		No	Repair wiring harness between ABS HU/CM and DLC-2.
*12	• Is voltage **approximately 12V** at **SST** (adapter harness) connector terminal T?	Yes	Repair wiring harness between ABS HU/CM and DLC-2.
		No	Go to next step.
*13	• Is there continuity between **SST** (adapter harness) connector terminal T and ground?	Yes	Repair wiring harness between ABS HU/CM and DLC-2.
		No	Inspect and repair wiring harness for ABS HU/CM power supply (terminal Z) and ground 1 (terminal AA).

NO.5 BRAKE SYSTEM WARNING LIGHT STAYS ON

AME698543000W09

- When performing an asterisked (*) troubleshooting inspection, shake the wiring harness and connectors while doing the inspection to discover whether poor contact points are the cause of any intermittent malfunctions. If there is a problem, check to make sure connectors, terminals and wiring harness are connected correctly and undamaged.

5	**BRAKE system warning light stays ON**
[TROUBLESHOOTING HINTS] • **Warning light circuit open in ABS HU/CM** • **Short to ground in warning light in parking brake switch and/or brake fluid level sensor**	

Diagnostic procedure

STEP	INSPECTION		ACTION
1	• Is brake fluid level okay?	Yes	Go to next step.
		No	Add brake fluid.
2	• Inspect the following items using WDS or equivalent. — BRAKE_LMP (BRAKE system warning light) • Is error message displayed regarding communication between ABS HU/CM and WDS or equivalent?	Yes	If a communication error message is displayed even after inspecting according to procedures displayed on WDS or equivalenr, go to Step 5.
		No	Go to next step.
3	• Inspect the following items using WDS or equivalent. — BRAKE_LMP (BRAKE system warning light) • Is BRAKE_LMP on after more than **4 seconds** with ignition switch ON?	Yes	Replace ABS HU/CM (short to B+ in ABS HU/CM).
		No	Go to next step.
4	• Disconnect the following connectors in order: — Parking brake switch connector — Brake fluid level sensor connector • Does BRAKE system warning light go out with ignition switch ON?	Yes	Replace parking brake switch and/or brake fluid level sensor (shorted on some internal part).
		No	Perform the following inspections. Repair if necessary. • Open in wiring harness between ABS HU/CM (terminal X) and instrument cluster (BRAKE system warning light) • Short to ground in wiring harness between instrument cluster (BRAKE system warning light) and parking brake switch. • Short to ground in wiring harness between instrument cluster (BRAKE system warning light) and brake fluid level sensor. • If above inspections are okay, replace instrument cluster (open or ground to short in instrument cluster).
*5	• Disconnect ABS HU/CM connector. Connect **SST** (adapter harness) (vehicle harness side only). • Is there continuity between **SST** (adapter harness) connector terminal T and DLC-2)?	Yes	Go to next step.
		No	Repair wiring harness between ABS HU/CM and DLC-2.
*6	• Is voltage **approximately 12 V** at **SST** (adapter harness) connector terminal T?	Yes	Repair wiring harness between ABS HU/CM and DLC-2.
		No	Go to next step.
*7	• Is there continuity between **SST** (adapter harness) connector terminal T and ground?	Yes	Repair wiring harness between ABS HU/CM and DLC-2.
		No	Inspect and repair wiring harness for ABS HU/CM power supply (terminal Z) and ground 1 (terminal AA).

P

NO.6 ABS AND BRAKE SYSTEM WARNING LIGHTS COME ON WHEN DRIVING

AME698543000W10

- When performing an asterisked (*) troubleshooting inspection, shake the wiring harness and connectors while doing the inspection to discover whether poor contact points are the cause of any intermittent malfunctions. If there is a problem, check to make sure connectors, terminals and wiring harness are connected correctly and undamaged.

6	ABS and BRAKE system warning lights come on when driving

[TROUBLESHOOTING HINTS]

- **ABS HU/CM initially detects ABS proportioning system malfunction, but detects normal ABS HU/CM operation when ignition switch is turned ON again.**
- **ABS initially detects low battery voltage, but detects normal ABS HU/CM operation when ignition switch is turned ON again.**

Diagnostic procedure

STEP	INSPECTION		ACTION
1	• Perform DTC inspection. • Is error message displayed regarding communication between ABS HU/CM and WDS or equivalent?	Yes	If a communication error message is displayed even after inspecting according to procedures displayed on WDS or equivalent, go to Step 4.
		No	Go to next step.
2	• Have DTCs been recorded in memory?	Yes	Perform inspection using appropriate DTC.
		No	Go to next step.
3	• Inspect the following items using WDS or equivalent. — ABS_LAMP (ABS warning light) — BRAKE_LMP (BRAKE system warning light) — ABS_VOLT (power supply voltage) • Drive vehicle under conditions in which warning light illuminates. • Confirm the voltage for PID/DATA monitor ABS_VOLT item under the following conditions: — When ABS warning light and BRAKE system warning light illuminate again — When ABS_LAMP and/or BRAKE_LMP is ON **Specification: above more than 10 V** • Is voltage within specification?	Yes	Replace ABS HU/CM (open or ground to short in ABS HU/CM).
		No	Go to next step.
4	• Is ABS HU/CM connector securely connected?	Yes	Go to Step 6.
		No	Connect ABS HU/CM connector securely, then go to next step.
5	• Drive vehicle under conditions in which warning light illuminates. • Do both ABS warning light and BRAKE system warning light illuminate again?	Yes	Inspect and repair wiring harness for ABS HU/CM power supply (terminal Z) and ground 1 (terminal AA).
		No	Temporary poor connection in connector. Inspect ABS HU/CM connector and terminal.
*6	• Disconnect ABS HU/CM connector. Connect **SST** (adapter harness) (vehicle harness side only). • Is there continuity between **SST** (adapter harness) connector terminal T and DLC-2?	Yes	Go to next step.
		No	Repair wiring harness between ABS HU/CM and DLC-2.
*7	• Is voltage **approximately 12 V** at **SST** (adapter harness) connector terminal T?	Yes	Repair wiring harness between ABS HU/CM and DLC-2.
		No	Go to next step.
*8	• Is there continuity between **SST** (adapter harness) connector terminal T and ground?	Yes	Repair wiring harness between ABS HU/CM and DLC-2.
		No	Inspect and repair wiring harness for ABS HU/CM power supply (terminal Z) and ground 1 (terminal AA).

NO.7 ABS WARNING LIGHT COMES ON WHEN DRIVING

AME698543000W11

- When performing an asterisked (*) troubleshooting inspection, shake the wiring harness and connectors while doing the inspection to discover whether poor contact points are the cause of any intermittent malfunctions. If there is a problem, check to make sure connectors, terminals and wiring harness are connected correctly and undamaged.

7	ABS warning light comes on when driving

[TROUBLESHOOTING HINTS]

- **ABS HU/CM initially detects ABS system malfunction, but detects normal ABS HU/CM operation when ignition switch is turned ON again.**
- **ABS initially detects low battery voltage (ABS HU/CM terminal Z voltage is below about 10 V and above about 8.5 V), but detects normal ABS HU/CM operation when ignition switch is turned ON again.**

Diagnostic procedure

STEP	INSPECTION		ACTION
1	• Perform DTC inspection. • Is error message displayed regarding communication between ABS HU/CM and WDS or equivalent?	Yes	If a communication error message is displayed even after inspecting according to procedures displayed on WDS or equivalent, go to Step 7.
		No	Go to next step.
2	• Have DTCs been recorded in memory?	Yes	Perform inspection using appropriate DTC.
		No	Go to next step.
3	• Select the following items using WDS or equivalent. — ABS_LAMP (ABS warning light) — ABS_VOLT (power supply voltage) • Drive vehicle under conditions in which warning light illuminates. • Does ABS_LAMP go ON when ABS warning light illuminates again?	Yes	Go to Step 6.
		No	Go to next step.
*4	• Disconnect ABS HU/CM connector. Connect **SST** (adapter harness) (vehicle harness side only). • Use the **SST** (adapter harness) connector to ground ABS warning light terminal W to body ground. • Drive vehicle under conditions in which warning light illuminates. • Does ABS warning light go out?	Yes	Replace ABS HU/CM (open circuit in ABS HU/CM).
		No	Go to next step.
*5	• Is there continuity between following **SST** (adapter harness) connector terminal W and instrument cluster connector (16–pin) terminal 1B?	Yes	Replace instrument cluster (open or ground to short in instrument cluster).
		No	Repair wiring harness between ABS HU/CM (terminal W) and instrument cluster (terminal 1B).
6	• Check the voltage for PID/DATA monitor ABS_VOLT item when ABS warning light illuminates again. **Specification: above more than 10 V** • Is voltage within specification?	Yes	Replace ABS HU/CM (open or ground to short in ABS HU/CM).
		No	Go to next step.
7	• Is battery voltage normal?	Yes	Go to next step.
		No	Perform inspection of battery and charging system.
8	• Is battery voltage normal with electrical load (A/C, headlights, etc.) on while engine is idling?	Yes	Go to next step.
		No	Perform inspection of charging system (drive belt tension, generator, etc.).
9	• Is ABS HU/CM connector terminal W securely connected?	Yes	Go to Step 11.
		No	Connect ABS HU/CM connector terminal W securely, then go to next step.
10	• Drive vehicle under conditions in which warning light illuminates. • Does ABS warning light illuminate again?	Yes	Inspect and repair wiring harness for ABS HU/CM power supply (terminal Z) and ground 1 (terminal AA).
		No	Temporary poor connection of terminal. Inspect ABS HU/CM connector and terminal.
*11	• Disconnect ABS HU/CM connector. Connect **SST** (adapter harness) (vehicle harness side only). • Is there continuity between **SST** (adapter harness) connector terminal T and DLC-2?	Yes	Go to next step.
		No	Repair wiring harness between ABS HU/CM and DLC-2.
*12	• Is voltage **approximately 12 V** at **SST** (adapter harness) connector terminal T?	Yes	Repair wiring harness between ABS HU/CM and DLC-2.
		No	Go to next step.
*13	• Is there continuity between **SST** (adapter harness) connector terminal T and ground?	Yes	Repair wiring harness between ABS HU/CM and DLC-2.
		No	Inspect and repair wiring harness for ABS HU/CM power supply (terminal Z) and ground 1 (terminal AA).

P

NO.8 ABS AND BRAKE SYSTEM WARNING LIGHTS GO ON AND OFF

AME698543000W12

- When performing an asterisked (*) troubleshooting inspection, shake the wiring harness and connectors while doing the inspection to discover whether poor contact points are the cause of any intermittent malfunctions. If there is a problem, check to make sure connectors, terminals and wiring harness are connected correctly and undamaged.

8	**ABS and BRAKE system warning lights go on and off**
[TROUBLESHOOTING HINTS] • **ABS HU/CM repeatedly starts and stops (intermittent open circuit in power, GND, etc.).** • **ABS intermittently detects low battery voltage (ABS HU/CM terminal Z voltage is below about 8.5 V.)**	

Diagnostic procedure

STEP	INSPECTION		ACTION
1	• Perform DTC inspection. • Is error message displayed regarding communication between ABS HU/CM and WDS or equivalent?	Yes	If a communication error message is displayed even after inspecting according to procedures displayed on WDS or equivalent, go to Step 7.
		No	Go to next step.
2	• Have DTCs been recorded in memory?	Yes	Perform inspection using appropriate DTC.
		No	Go to next step.
3	• Inspect the following items using WDS or equivalent. — ABS_LAMP (ABS warning light) — ABS_LAMP (BRAKE system warning light) — ABS_VOLT(power supply voltage) • Drive vehicle under conditions in which warning light illuminates. • Do ABS_LAMP and ABS_LAMP go ON when malfunction symptom occur again?	Yes	Go to Step 6.
		No	Go to next step.
*4	• Disconnect ABS HU/CM connector. Connect **SST** (adapter harness) (vehicle harness side only). • Use the **SST** (adapter harness) connector to ground the warning light terminal (ABS: terminal W, BRAKE system: terminal X) to body ground. • Drive vehicle under conditions in which warning light illuminates. • Does malfunction symptom occur again?	Yes	Go to next step.
		No	Replace ABS HU/CM (open circuit in ABS HU/CM).
*5	• Is there continuity between following **SST** (adapter harness) connector terminal and instrument cluster connector (16–pin, 24–pin) terminals? — Terminal W and 1B — Terminal X and 3S	Yes	Replace instrument cluster (open or ground to short in instrument cluster).
		No	Repair wiring harness between ABS HU/CM (ABS warning light: terminal W, BRAKE system warning light: terminal X) and instrument cluster.
6	• Drive vehicle under conditions in which warning light illuminates. • Inspect the voltage for PID/DATA monitor ABS_VOLT when ABS warning light and BRAKE system warning light illuminates again. **Specification: above more than 10 V** • Is voltage within specification?	Yes	Replace ABS HU/CM (open or ground to short in ABS HU/CM).
		No	Go to next step.
7	• Is battery voltage normal?	Yes	Go to next step.
		No	Perform inspection of battery and charging system.
8	• Is battery voltage normal with electrical load (A/C, headlights, etc.) on while engine is idling?	Yes	Go to next step.
		No	Perform inspection of charging system (drive belt tension, generator, etc.).
9	• Is ABS HU/CM connector securely connected?	Yes	Go to Step 11.
		No	Connect ABS HU/CM connector securely, then go to next step.
10	• Drive vehicle under conditions in which warning light illuminates. • Does malfunction symptom occur again?	Yes	Inspect and repair wiring harness for ABS HU/CM power supply (terminal Z) and ground 1 (terminal AA).
		No	Temporary poor connection in connector. Inspect ABS HU/CM connector and terminal.

STEP	INSPECTION		ACTION
*11	• Disconnect ABS HU/CM connector. Connect **SST** (adapter harness) (vehicle harness side only). • Is there continuity between **SST** (adapter harness) connector terminal T and DLC-2?	Yes	Go to next step.
		No	Repair wiring harness between ABS HU/CM and DLC-2.
*12	• Is voltage **approximately 12 V** at **SST** connector terminal T?	Yes	Repair wiring harness between ABS HU/CM and DLC-2.
		No	Go to next step.
*13	• Is there continuity between **SST** (adapter harness) connector terminal T and ground?	Yes	Repair wiring harness between ABS HU/CM and DLC-2.
		No	Inspect and repair wiring harness for ABS HU/CM power supply (terminal Z) and ground 1 (terminal AA).

End Of Ste

NO.9 ABS WARNING LIGHT GOES ON AND OFF

AME698543000W13

- When performing an asterisked (*) troubleshooting inspection, shake the wiring harness and connectors while doing the inspection to discover whether poor contact points are the cause of any intermittent malfunctions. If there is a problem, check to make sure connectors, terminals and wiring harness are connected correctly and undamaged.

9	**ABS warning light goes on and off**
[TROUBLESHOOTING HINTS] • **Intermittent open circuit in ABS warning light** • **ABS intermittently detects low battery voltage (ABS HU/CM terminal Z voltage is below about 10 V and above about 8.5 V.)**	

Diagnostic procedure

STEP	INSPECTION		ACTION
1	• Perform DTC inspection. • Is error message displayed regarding communication between ABS HU/CM and WDS or equivalent?	Yes	If a communication error message is displayed even after inspecting according to procedures displayed on WDS or equivalent, go to Step 7.
		No	Go to next step.
2	• Have DTCs been recorded in memory?	Yes	Perform inspection using appropriate DTC.
		No	Go to next step.
3	• Select the following items using WDS or equivalent. — ABS_LAMP (ABS warning light) — ABS_VOLT (power supply voltage) • Drive vehicle under conditions in which warning light illuminates. • Does ABS_LAMP come ON when malfunction symptom occur again?	Yes	Go to Step 6.
		No	Go to next step.
*4	• Disconnect ABS HU/CM connector. Connect **SST** (adapter harness) (vehicle harness side only). • Use the **SST** (adapter harness) connector to ground ABS warning light terminal W to body ground. • Drive vehicle under conditions in which warning light illuminates. • Does malfunction symptom occur again?	Yes	Go to next step.
		No	Replace ABS HU/CM (open circuit in ABS HU/CM).
*5	• Is there continuity between following **SST** (adapter harness) connector terminal W and instrument cluster connector (16–pin) terminal 1B?	Yes	Replace instrument cluster (open or ground to short in instrument cluster).
		No	Repair wiring harness between ABS HU/CM (terminal W) and instrument cluster.
6	• Drive vehicle under conditions in which warning light illuminates. • Inspect the voltage for PID/DATA monitor ABS_VOLT when ABS warning light illuminates again. **Specification: above more than 10 V** • Is voltage within specification?	Yes	Replace ABS HU/CM (open or short to B+ in ABS HU/CM).
		No	Go to next step.
7	• Is battery voltage normal?	Yes	Go to next step.
		No	Perform inspection of battery and charging system.

P

STEP	INSPECTION		ACTION
8	• Is battery voltage normal with electrical load (A/C, headlights, etc.) on while engine is idling?	Yes	Go to next step.
		No	Perform inspection of charging system (drive belt tension, generator, etc.).
9	• Is ABS HU/CM connector securely connected?	Yes	Go to Step 11.
		No	Connect ABS HU/CM connector securely, then go to next step.
10	• Drive vehicle under conditions in which warning light illuminates. • Does malfunction symptom occur again?	Yes	Inspect and repair wiring harness for ABS HU/CM power supply (terminal Z) and ground 1 (terminal AA).
		No	Temporary poor connection in connector. Inspect ABS HU/CM connector and terminal.
*11	• Disconnect ABS HU/CM connector. Connect **SST** (adapter harness) (vehicle harness side only). • Is there continuity between **SST** (adapter harness) connector terminal T and DLC-2?	Yes	Go to next step.
		No	Repair wiring harness between ABS HU/CM and DLC-2.
*12	• Is voltage **approximately 12 V** at **SST** (adapter harness) connector terminal T?	Yes	Repair wiring harness between ABS HU/CM and DLC-2.
		No	Go to next step.
*13	• Is there continuity between **SST** (adapter harness) connector terminal T and ground?	Yes	Repair wiring harness between ABS HU/CM and DLC-2.
		No	Inspect and repair wiring harness for ABS HU/CM power supply (terminal Z) and ground 1 (terminal AA).

End Of Sie

NO.10 BRAKE SYSTEM WARNING LIGHT GOES ON AND OFF

AME698543000W14

- When performing an asterisked (*) troubleshooting inspection, shake the wiring harness and connectors while doing the inspection to discover whether poor contact points are the cause of any intermittent malfunctions. If there is a problem, check to make sure connectors, terminals and wiring harness are connected correctly and undamaged.

10	BRAKE system warning light goes on and off
[TROUBLESHOOTING HINTS] • **Intermittent open circuit in BRAKE system warning light**	

Diagnostic procedure

STEP	INSPECTION		ACTION
1	• Is brake fluid level okay?	Yes	Go to next step.
		No	Add brake fluid.
2	• Inspect the following items using WDS or equivalent. — BRAKE_LMP (BRAKE system warning light) • Is error message displayed regarding communication between ABS HU/CM and WDS or equivalent?	Yes	If a communication error message is displayed even after inspecting according to procedures displayed on WDS or equivalent, go to Step 5.
		No	Go to next step.
3	• Inspect the following items using WDS or equivalent. — BRAKE_LMP (BRAKE system warning light) • Drive vehicle under conditions in which warning light illuminates. • Does BRAKE_LMP come ON when malfunction symptom occur again?	Yes	Replace ABS HU/CM (open or ground to short in ABS HU/CM).
		No	Go to next step.
4	• Disconnect the following connectors in order: — Parking brake switch connector. — Brake fluid level sensor connector • Drive vehicle under conditions in which warning light illuminates. • Does malfunction symptom occur again?	Yes	Inspect and repair following parts: • Open in wiring harness between ABS HU/CM (terminal X) and instrument cluster (BRAKE system warning light) • Short to ground in wiring harness between instrument cluster (BRAKE system warning light) and parking brake switch. • Short to ground in wiring harness between instrument cluster (BRAKE system warning light) and brake fluid level sensor. • If above inspection items are okay, replace instrument cluster (open or ground to short in instrument cluster).
		No	Replace parking brake switch and/or brake fluid level sensor (shorted to some internal part).

STEP	INSPECTION		ACTION
*5	• Disconnect ABS HU/CM connector. Connect **SST** (adapter harness) (vehicle harness side only). • Is there continuity between **SST** (adapter harness) connector terminal T and DLC-2?	Yes	Go to next step.
		No	Repair wiring harness between ABS HU/CM and DLC-2.
*6	• Is voltage **approximately 12 V** at **SST** (adapter harness) connector terminal T?	Yes	Repair wiring harness between ABS HU/CM and DLC-2.
		No	Go to next step.
*7	• Is there continuity between **SST** (adapter harness) connector terminal T and ground?	Yes	Repair wiring harness between ABS HU/CM and DLC-2.
		No	Inspect and repair wiring harness for ABS HU/CM power supply (terminal Z) and ground 1 (terminal AA).

End Of Ste

NO.11 BRAKE SYSTEM MALFUNCTION

AME698543000W15

11	**BRAKE system malfunction**
[TROUBLESHOOTING HINTS] • **There is a mechanical malfunction in system.**	

Diagnostic procedure

STEP	INSPECTION		ACTION
1	• Have DTCs been recorded in memory?	Yes	Perform inspection using appropriate DTC.
		No	Go to next step.
2	• Perform “ABS hydraulic unit (HU)/ control module (CM) system inspection”. • Is system okay?	Yes	Inspect conventional brake system.
		No	**If wheels do not rotate:** • Replace ABS HU/CM. **If wheels rotate but order in which wheels rotate is incorrect:** • Inspect brake pipe passage to ABS HU/CM.

End

P

NO.1 ABS WARNING LIGHT STAYS ON MORE THAN 4 SECONDS WITH IGNITION SWITCH ON.

AME698543000W16

1	ABS warning light stays on more than 4 seconds with ignition switch ON.

[TROUBLESHOOTING HINTS]
- **ABS HU/CM detects ABS system malfunction**.
- **ABS HU/CM detects low voltage in power supply. (ABS HU/CM Terminal Z voltage is below about 10V)**
- **ABS HU/CM does not operate**.
- **ABS warning light circuit open or shorted to ground**.

Diagnostic procedure

STEP	INSPECTION		ACTION
1	**INSPECT ABS HU/CM IGNITION POWER SUPPLY FUSE** • Is ABS HU/CM ignition power supply fuse okay?	Yes	Go to next step.
		No	Check for a short to ground on blown fuse's circuit. Repair or replace as necessary. Install appropriate amperage fuse.
2	**INSPECT WIRING HARNESS BETWEEN ABS HU/CM AND DLC (DATA KINK CONNECTOR-2) FOR CONTINUITY AND SHORTS** • Perform DTC inspection. • Is error message displayed regarding communication between ABS HU/CM and WDS or equivalent?	Yes	If a communication error message is displayed even after inspecting according to procedures displayed on WDS or equivalent, go to Step 8.
		No	Go to next step.
3	**CHECK FOR DTCs IN ABS HU/CM** • Have DTCs been recorded in memory?	Yes	Perform inspection using appropriate DTC.
		No	Go to next step.
4	**INSPECT PID/DATA IN ABS HU/CM** • Inspect the following items using WDS or equivalent. — ABS_LAMP (ABS warning light) — ABS_VOLT (power supply voltage) • Is ABS_LAMP ON after **more than 4 seconds** with ignition switch ON?	Yes	Go to Step 7.
		No	Go to next step.
5*	**CHECK FOR OPEN CIRCUITS IN ABS HU/CM** • Disconnect ABS HU/CM. Connect **SST** (harness adapter) (vehicle harness side only). • Use the **SST** (adapter harness) connector to ground ABS warning light Terminal W to body ground. • Does ABS warning light go out with ignition switch ON?	Yes	Replace ABS HU/CM (open circuit in ABS HU/CM).
		No	Go to next step.
*6	**INSPECT WIRING HARNESS BETWEEN ABS HU/CM AND INSTRUMENT CLUSTER FOR CONTINUITY** • Disconnect all instrument cluster harness. • Is there continuity between **SST** (adapter harness) connector terminal W and instrument cluster connector (16-pin) terminal 1B?	Yes	Replace instrument cluster (open or short to ground in instrument cluster).
		No	Inspect wiring harness between ABS HU/CM (Terminal W) and instrument cluster.
7	**INSPECT ABS HU/CM IGNITION POWER SUPPLY SYSTEM (TERMINAL Z)** • Check the voltage for PID/DATA monitor ABS_VOLT item. **Specification: above 10 V** • Is voltage within specification?	Yes	Replace ABS HU/CM (open or short circuit to B+ in ABS HU/CM).
		No	Go to next step.
8	**INSPECT BATTERY** • Is battery voltage normal?	Yes	Go to next step.
		No	Perform inspection of battery and charging system.
9	**INSPECT CHARGING SYSTEM** • Is battery voltage normal with electrical load (A/C, headlights, etc.) on while engine is idling?	Yes	Go to next step.
		No	Perform inspection of charging system (drive belt tension, generator, etc.).
10	**VERIFY THAT ABS HU/CM IS CONNECTED** • Is ABS HU/CM connector securely connected?	Yes	Go to Step 12.
		No	Connect ABS HU/CM securely, then go to next step.

STEP	INSPECTION		ACTION
11	**VERIFY THAT MALFUNCTION SYMPTOM OCCURS AFTER ABS HU/CM IS CONNECTED** • Does ABS warning light go out after **more than 4 seconds** with ignition switch ON?	Yes	Temporary poor connection in ABS HU/CM connector. Inspect connector and terminal.
		No	Go to next step.
*12	**VERIFY THAT ABS HU/CM CONNECTOR TERMINALS Z, AA AND W ARE CONNECTED** • Does malfunction symptom occur again when ABS HU/CM connector Terminals Z, AA and W are shaken while the ignition switch is ON?	Yes	Connect ABS HU/CM connector Terminals Z, AA and W securely, then go to next step.
		No	Go to Step 14.
13	**VERIFY THAT MALFUNCTION SYMPTOM OCCURS AFTER ABS HU/CM CONNECTOR TERMINALS Z, AA AND W ARE CONNECTED** • Does ABS warning light go out after **more than 4 seconds** with ignition switch ON?	Yes	Temporary poor connection at terminal. Inspect ABS HU/CM connector and terminal.
		No	Go to next step.
*14	**INSPECT WIRING HARNESS BETWEEN FUSE BLOCK AND ABS HU/CM (TERMINAL Z) FOR CONTINUITY** • Disconnect ABS HU/CM. Connect **SST** (adapter harness) (vehicle harness side only). • Is voltage **approximately 12 V** at **SST** (adapter harness) connector Terminal Z?	Yes	Go to next step.
		No	Repair wiring harness between fuse block and ABS HU/CM.
*15	**INSPECT WIRING HARNESS BETWEEN ABS HU/CM (TERMINAL AA) AND GROUND FOR CONTINUITY** • Turn ignition switch to OFF. • Is there continuity between **SST** (adapter harness) connector Terminal AA and ground?	Yes	If a communication error message is displayed on WDS or equivalent in Step 2 inspection, go to next step. If a communication error message is not displayed on WDS or equivalent in Step 2 inspection, recheck malfunction symptoms.
		No	Repair wiring harness between ABS HU/CM and ground.
*16	**INSPECT WIRING HARNESS BETWEEN ABS HU/CM AND DLC-2 (DATA KINK CONNECTOR-2) FOR CONTINUITY** • Is there continuity between **SST** (adapter harness) connector Terminal T and DLC-2?	Yes	Go to next step.
		No	Repair wiring harness between ABS HU/CM and DLC-2.
*17	**INSPECT WIRING HARNESS BETWEEN ABS HU/CM AND DLC-2 (DATA KINK CONNECTOR-2) FOR SHORT TO B+** • Is voltage **approximately 12 V** at **SST** (adapter harness) connector Terminal T?	Yes	Repair wiring harness between ABS HU/CM and DLC-2.
		No	Go to next step.
*18	**INSPECT WIRING HARNESS BETWEEN ABS HU/CM AND DLC-2 (DATA KINK CONNECTOR-2) FOR SHORT TO GROUND** • Is there continuity between **SST** (adapter harness) connector Terminal T and ground?	Yes	Repair wiring harness between ABS HU/CM and DLC-2 .
		No	Replace ABS HU/CM (communication circuit malfunction in ABS HU/CM).

End Of Ste

P

NO.2 ABS WARNING LIGHT DOES NOT ILLUMINATE WITH IGNITION SWITCH ON.

AME698543000W17

2	ABS warning light does not illuminate with ignition switch ON.
[TROUBLESHOOTING HINTS] • ABS warning light circuit open or shorted to ground.	

Diagnostic procedure

STEP	INSPECTION		ACTION
1	**VERIFY WHETHER MALFUNCTION IS IN COMMON GROUND FOR ABS WARNING LIGHT OR INDICATOR OTHER LIGHTS (TURN SIGNAL INDICATOR LIGHT)** • Turn ignition switch ON. • Turn signal switch ON. • Turn headlight switch on and set to HI-beam position. • Do turn signal indicator light and HI-beam indicator light in instrument cluster illuminate?	Yes	Go to Step 3.
		No	Go to next step.
2	**VERIFY WHETHER MALFUNCTION IS IN WIRING HARNESS (BETWEEN INSTRUMENT CLUSTER AND GROUND FOR CONTINUITY) OR INSTRUMENT CLUSTER** • Turn ignition switch to OFF. • Disconnect instrument cluster (24-pin) • Is there continuity between instrument cluster connector (24-pin) Terminal 3M and ground?	Yes	Inspect instrument cluster (open circuit in instrument cluster).
		No	Repair wiring harness between instrument cluster (Terminal 3M and ground).
*3	**CHECK FOR SHORT TO GROUND IN ABS/ TCS HU/CM** • Disconnect ABS/TCS HU/CM and turn ignition switch ON. • Does ABS warning light illuminate?	Yes	Replace ABS/TCS HU/CM (ground to short in ABS/TCS HU/CM).
		No	Go to next step.
4	**INSPECT ABS WARNING LIGHT BULB** • Remove instrument cluster. • Inspect ABS warning light bulb. • Is it okay?	Yes	Go to next step.
		No	Replace ABS warning light bulb.
*5	**VERIFY WHETHER MALFUNCTION IS IN WIRING HARNESS (BETWEEN INSTRUMENT CLUSTER AND ABS/TCS HU/CM FOR GROUND TO SHORT) OR INSTRUMENT CLUSTER** • Is there continuity between instrument cluster connector (16-pin) Terminal 1B and ground?	Yes	Repair wiring harness between instrument cluster (Terminal W) and ABS/TCS HU/CM.
		No	Replace instrument cluster (open or short to ground in instrument cluster).

End Of Sie

NO.3 BRAKE SYSTEM WARNING LIGHT STAYS ON MORE THAN 4 SECONDS WITH IGNITION SWITCH ON. (PARKING BRAKE IS RELEASED.)

AME698543000W18

3	**BRAKE system warning light stays on more than 4 seconds with ignition switch ON. (Parking brake is released.)**.

[TROUBLESHOOTING HINTS]
- **ABS/TCS HU/CM detects ABS system malfunction**.
- **ABS/TCS HU/CM detects low voltage in power supply. (ABS/TCS HU/CM ignition Terminal Z voltage is below about 10 V)**.
- **BRAKE system warning light circuit open or shorted to ground**.
- **Brake fluid level sensor circuit shorted ground**.

Diagnostic procedure

STEP	INSPECTION		ACTION
1	**INSPECT ABS WARNING LIGHT** • Does ABS warning light also illuminate?	Yes	Go to symptom troubleshooting No.1.
		No	Go to next step.
2	**INSPECT BRAKE FLUID LEVEL** • Is brake fluid level okay?	Yes	Go to next step.
		No	Add brake fluid.
3	**INSPECT WIRING HARNESS BETWEEN ABS/TCS HU/CM AND DLC-2 (DATA KINK CONNECTOR-2) FOR CONTINUITY AND SHORTS** • Inspect the following items using WDS or equivalent. — BRAKE_LMP (BRAKE system warning light) • Is error message displayed regarding communication between ABS/TCS HU/CM and WDS or equivalent?	Yes	If communication error message is displayed even after inspecting according to procedures displayed on WDS or equivalent, go to Step 6.
		No	Go to next step.
4	**INSPECT PID/DATA IN ABS/TCS HU/CM** • Select the following items using WDS or equivalent? — BRAKE_LMP (BRAKE system warning light) • Is BRAKE_LMP is ON after **more than 4 seconds** with ignition switch ON?	Yes	Replace ABS/TCS HU/CM.
		No	Go to next step.
5	**VERIFY WHETHER MALFUNCTION IS IN BRAKE FLUID LEVEL SENSOR OR IN SOME OTHER PART** • Disconnect brake fluid level sensor connector. • Does BRAKE system warning light go out with ignition switch ON?	Yes	Inspect brake fluid level sensor.
		No	Perform the following inspections. Repair if necessary. • Open in wiring harness between ABS/TCS HU/CM (X terminal) and instrument cluster (BRAKE system warning light) • Short to ground in wiring harness between instrument cluster (BRAKE system warning light) If above inspections are okay, replace instrument cluster (open or ground to short in instrument cluster).
*6	**INSPECT WIRING HARNESS BETWEEN ABS/TCS HU/CM AND DLC-2 FOR CONTINUITY** • Disconnect ABS/TCS HU/CM connector. Connect **SST** (adapter harness) (vehicle harness side only). • Is there continuity between **SST** connector terminal T and DLC-2 ?	Yes	Go to next step.
		No	Repair wiring harness between ABS/TCS HU/CM and DLC-2.
*7	**INSPECT WIRING HARNESS BETWEEN ABS/TCS HU/CM AND DLC-2 FOR SHORT TO B+** • Is voltage **approximately 12 V** at **SST** connector terminal T?	Yes	Repair wiring harness between ABS/TCS HU/CM and DLC-2.
		No	Go to next step.
*8	**INSPECT WIRING HARNESS BETWEEN ABS/TCS HU/CM AND DLC -2(DATA LINK CONNECTOR-2) FOR SHORT TO GROUND** • Is there continuity between **SST** connector terminal T and ground?	Yes	Repair wiring harness between ABS/TCS HU/CM and DLC-2.
		No	Replace ABS/TCS HU/CM (communication circuit malfunction in ABS/TCS HU/CM).

End Of Ste

P

NO.4 BRAKE SYSTEM WARNING LIGHT DOES NOT ILLUMINATE WITH IGNITION SWITCH ON.

AME698543000W19

4	BRAKE system warning light does not illuminate with ignition switch ON.
[TROUBLESHOOTING HINTS] • BRAKE system warning light circuit open or shorted to ground.	

Diagnostic procedure

STEP	INSPECTION		ACTION
1	**INSPECT ABS WARNING LIGHT** • Does ABS warning light illuminate?	Yes	Go to next step.
		No	Go to symptom troubleshooting No.2.
2	**CHECK FOR SHORT TO GROUND IN ABS/ TCS HU/CM** • Disconnect ABS/TCS HU/CM connector and turn ignition switch ON. • Does BRAKE system warning light illuminate?	Yes	Replace ABS/TCS HU/CM (ground to short in ABS/TCS HU/CM).
		No	Go to next step.
3	**INSPECT BRAKE SYSTEM WARNING LIGHT BULB** • Remove instrument cluster. • Inspect BRAKE system warning light bulb. • Is it okay?	Yes	Go to next step.
		No	Replace BRAKE system warning light bulb.
*4	**VERIFY WHETHER MALFUNCTION IS IN WIRING HARNESS (BETWEEN INSTRUMENT CLUSTER AND/TCS HU/CM FOR SHORT TO GROUND) OR INSTRUMENT CLUSTER** • Is there continuity between instrument cluster connector (24-pin) terminal 3S and ground?	Yes	Repair wiring harness between instrument cluster and ABS/ TCS HU/CM.
		No	Replace instrument cluster (open or ground to short in instrument cluster).

End Of Sie

NO.5 ABS WARNING LIGHT, BRAKE SYSTEM WARNING LIGHT, TCS INDICATOR LIGHT AND TCS OFF LIGHT DO NOT ILLUMINATE WITH IGNITION SWITCH ON.

AME698543000W20

5	ABS warning light, BRAKE system warning light, TCS indicator light and TCS OFF light do not illuminate with ignition switch ON.
[TROUBLESHOOTING HINTS] • Warning light circuit and indicator light circuit open or shorted to ground.	

Diagnostic procedure

STEP	INSPECTION		ACTION
1	**VERIFY WHETHER MALFUNCTION IS IN COMMON POWER SUPPLY FOR WARNING LIGHT AND INDICATOR LIGHTS OR OTHER WARNING LIGHTS** • Do all the following warning lights illuminate when IG switch is turned ON? — CHECK ENGINE warning light — Air bag system wiring light	Yes	Replace ABS/TCS HU/CM (open or ground to short in ABS/ TCS HU/CM).
		No	Go to next step.
2	**INSPECT INSTRUMENT CLUSTER POWER SUPPLY FUSE** • Is instrument cluster ignition power supply fuse okay?	Yes	Go to next step.
		No	Check for a short to ground on blown fuse's circuit. Repair or replace as necessary. Install appropriate amperage fuse.
*3	**VERIFY WHETHER INSTRUMENT MALFUNCTION IN WIRING HARNESS (BETWEEN POWER SUPPLY AND INSTRUMENT CLUSTER FOR CONTINUITY) OR INSTRUMENT CLUSTER** • Turn ignition switch ON. • Measure voltage at instrument cluster connector (24-pin) Terminal 3J. • Is voltage **approximately 12 V**?	Yes	Inspect warning light circuit in instrument cluster (open circuit in instrument cluster).
		No	Repair wiring harness between fuse block and instrument cluster (Terminal 3J).

End Of Sie

NO.6 TCS INDICATOR LIGHT DOES NOT ILLUMINATE WITH IGNITION SWITCH ON.

AME698543000W21

6	TCS indicator light does not illuminate with ignition switch ON.
[TROUBLESHOOTING HINTS] • TCS indicator light circuit open.	

Diagnostic procedure

STEP	INSPECTION		ACTION
1	**INSPECT WIRING HARNESS BETWEEN ABS/TCS HU/CM AND DLC-2 FOR CONTINUITY AND SHORTS** • Activate CHK_TRAC (TCS indicator light) using WDS or equivalent. • Is error message displayed regarding communication between ABS/TCS HU/CM and WDS or equivalent?	Yes	If a communication error message is displayed even after inspecting according to procedures displayed on WDS or equivalent, go to Step 6.
		No	Go to next step.
2	**INSPECT TCS INDICATOR LIGHT BULB MALFUNCTION INSPECTION FUNCTION IN ABS/TCS HU/CM** • Activate CHK_TRAC (TCS indicator light) using WDS or equivalent. • Does TCS indicator light illuminate?	Yes	Replace ABS/TCS HU/CM (indicator light bulb malfunction inspection control incorrect in ABS/TCS HU/CM).
		No	Go to next step.
3	**INSPECT TCS INDICATOR LIGHT BULB** • Remove instrument cluster. • Inspect TCS indicator light bulb. • Is it okay?	Yes	Go to next step.
		No	Replace TCS indicator light bulb.
*4	**INSPECT TCS INDICATOR LIGHT CIRCUIT IN INSTRUMENT CLUSTER** • Connect instrument cluster (20-pin) Terminal 2K to ground and connect all instrument cluster connections. • Does TCS indicator light illuminate with ignition switch ON?	Yes	Undo short and connect all instrument cluster connectors, go to next step.
		No	Replace instrument cluster (open circuit in instrument cluster).
*5	**VERIFY WHETHER MALFUNCTION IS IN WIRING HARNESS (BETWEEN ABS/TCS HU/CM AND INSTRUMENT CLUSTER FOR CONTINUITY) OR ABS/TCS HU/CM** • Disconnect ABS/TCS HU/CM. Connect **SST** (adapter harness) (vehicle harness side only). • Use the **SST** (adapter harness) connector to ground TCS indicator light Terminal M to body ground. • Does TCS indicator light illuminate with ignition switch OFF?	Yes	Replace ABS/TCS HU/CM (open circuit in ABS/TCS HU/CM).
		No	Repair wiring harness between ABS/TCS HU/CM (Terminal M) and instrument cluster.
*6	**INSPECT WIRING HARNESS BETWEEN ABS/TCS HU/CM AND DLC (DATA LINK CONNECTION) FOR CONTINUITY** • Is there continuity between **SST** (adapter harness) connector Terminal T and DLC-2.	Yes	Go to next step.
		No	Repair wiring harness between ABS/TCS HU/CM (Terminal T) and DLC-2.
7	**INSPECT WIRING HARNESS BETWEEN ABS/TCS HU/CM AND DLC-2 FOR SHORT TO B+** • Is voltage **approximately 12 V** at **SST** (adapter harness) connect Terminal T?	Yes	Repair wiring harness between ABS/TCS HU/CM (Terminal T) and DLC-2.
		No	Go to next step.
*8	**INSPECT WIRING HARNESS BETWEEN ABS/TCS HU/CM AND DLC-2 FOR SHORT TO GROUND** • Is there continuity between **SST** (adapter harness) connector Terminal T and ground?	Yes	Repair wiring harness between ABS/TCS HU/CM (Terminal T) and DLC-2.
		No	Replace ABS/TCS HU/CM (communication circuit malfunction in ABS/TCS HU/CM).

End Of Ste

P

NO.7 TCS OFF LIGHT DOES NOT ILLUMINATE WITH IGNITION SWITCH ON.

AME698543000W22

7	TCS OFF light does not illuminate with ignition switch ON.
[TROUBLESHOOTING HINTS] • TCS OFF light circuit open.	

Diagnostic procedure

STEP	INSPECTION		ACTION
1	**INSPECT WIRING HARNESS BETWEEN ABS/TCS HU/CM AND DLC-2 FOR CONTINUITY AND SHORTS** • Activate TRAC_OFF (TCS OFF light) using WDS or equivalent. • Is error message displayed regarding communication between ABS/TCS HU/CM and WDS or equivalent?	Yes	If a communication error message is displayed even after inspecting according to procedures displayed on WDS or equivalent, go to Step 6.
		No	Go to next step.
2	**INSPECT OFF LIGHT BULB FOR MALFUNCTIONS BY USING INSPECTION FUNCTION IN ABS/TCS HU/CM** • Activate TRAC_OFF (TCS OFF light) using WDS or equivalent. • Does TCS OFF light illuminate?	Yes	Replace ABS/TCS HU/CM (OFF light bulb malfunction inspection control incorrect in ABS/TCS HU/CM).
		No	Go to next step.
3	**INSPECT TCS INDICATOR LIGHT BULB** • Remove instrument cluster. • Inspect TCS OFF light bulb. • Is it okay?	Yes	Go to next step.
		No	Replace TCS OFF light bulb.
*4	**INSPECT TCS OFF LIGHT CIRCUIT IN INSTRUMENT CLUSTER** • Connect instrument cluster (16-pin) Terminal 1C to ground and connect all instrument cluster connections. • Does TCS OFF light illuminate with ignition switch ON?	Yes	Undo short and connect all instrument cluster connectors, go to next step.
		No	Replace instrument cluster (open circuit in instrument cluster).
*5	**VERIFY WHETHER MALFUNCTION IS IN WIRING HARNESS (BETWEEN ABS/TCS HU/CM AND INSTRUMENT CLUSTER FOR CONTINUITY) OR ABS/TCS HU/CM** • Disconnect ABS/TCS HU/CM. Connect **SST** (adapter harness) (vehicle harness side only). • Use the **SST** (adapter harness) connector to ground TCS indicator light Terminal O to body ground. • Does TCS OFF light illuminate with ignition switch ON?	Yes	Replace ABS/TCS HU/CM (open circuit in ABS/TCS HU/CM).
		No	Repair wiring harness between ABS/TCS HU/CM (Terminal O) and instrument cluster.
*6	**INSPECT WIRING HARNESS BETWEEN ABS/TCS HU/CM AND DLC (DATA LINK CONNECTION) FOR CONTINUITY** • Is there continuity between **SST** (adapter harness) connector Terminal T and DLC-2.	Yes	Go to next step.
		No	Repair wiring harness between ABS/TCS HU/CM (Terminal T) and DLC-2.
*7	**INSPECT WIRING HARNESS BETWEEN ABS/TCS HU/CM AND DLC-2 FOR SHORT TO B+** • Is voltage **approximately 12 V** at **SST** (adapter harness) connect Terminal T?	Yes	Repair wiring harness between ABS/TCS HU/CM (Terminal T) and DLC-2.
		No	Go to next step.
*8	**INSPECT WIRING HARNESS BETWEEN ABS/TCS HU/CM AND DLC-2 FOR SHORT TO GROUND** • Is there continuity between **SST** (adapter harness) connector Terminal T and ground?	Yes	Repair wiring harness between ABS/TCS HU/CM (Terminal T) and DLC-2.
		No	Replace ABS/TCS HU/CM (communication circuit malfunction in ABS/TCS HU/CM).

End Of Sto

NO.8 TCS INDICATOR LIGHT STAYS ON MORE THAN 4 SECONDS WITH IGNITION SWITCH ON.

AME698543000W23

8	TCS indicator light stays on more than 4 seconds with ignition switch ON.
[TROUBLESHOOTING HINTS] • TCS indicator light circuit shorted to ground.	

Diagnostic procedure

STEP	INSPECTION		ACTION
1	**CHECK FOR DTCs IN ABS/TCS HU/CM** • Have DTCs been recorded in memory?	Yes	Perform inspection using appropriate DTC.
		No	Go to next step.
*2	**CHECK FOR SHORT TO GROUND CIRCUITS IN ABS/TCS HU/CM** • Disconnect ABS/TCS HU/CM. • Does TCS indicator light go out with ignition switch ON?	Yes	Replace ABS/TCS HU/CM (short to ground in ABS/TCS HU/CM).
		No	Go to next step.
*3	**VERIFY WHETHER MALFUNCTION IS IN WIRING HARNESS (BETWEEN INSTRUMENT CLUSTER AND ABS/TCS HU/CM FOR SHORT TO GROUND) OR INSTRUMENT CLUSTER** • Disconnect instrument cluster (20-pin). • Connect **SST** (adapter harness) (vehicle harness side only). • Is there continuity between **SST** (adapter harness) connector Terminal M and ground?	Yes	Repair wiring harness between ABS/TCS HU/CM (Terminal M) and instrument cluster.
		No	Replace instrument cluster (short to ground in instrument cluster).

End Of Ste

NO.9 TCS OFF LIGHT STAYS ON MORE THAN 4 SECONDS WITH IGNITION SWITCH ON.

AME698543000W24

9	TCS OFF light stays on more than 4 seconds with ignition switch ON.
[TROUBLESHOOTING HINTS] • **ABS/TCS HU/CM detects TCS OFF switch ON malfunction signal**. • **TCS OFF light circuit shorted to ground**.	

Diagnostic procedure

STEP	INSPECTION		ACTION
1	**INSPECT WIRING HARNESS BETWEEN ABS/TCS HU/CM AND DLC-2 FOR CONTINUITY AND SHORTS** • Perform DTC inspection. • Is error message displayed regarding communication between ABS/TCS HU/CM and WDS or equivalent?	Yes	If a communication error message is displayed even after inspecting according to procedures displayed on WDS or equivalent, go to Step 8.
		No	Go to next step.
2	**CHECK FOR DTCs IN ABS/TCS HU/CM** • Have DTCs been recorded in memory?	Yes	Perform inspection using appropriate DTC.
		No	Go to next step.
3	**INSPECT PID/DATA IN ABS/TCS HU/CM** • Inspect the following items using WDS or equivalent. — TRAC_SW (TCS OFF switch) • Is TRAC_SW ON displayed in WDS or equivalent?	Yes	Go to step 6 (TCS OFF switch system short to ground).
		No	Go to next step.
*4	**CHECK FOR SHORT TO GROUND IN ABS/TCS HU/CM** • Disconnect ABS/TCS HU/CM. • Does TCS OFF light go out with ignition switch ON?	Yes	Replace ABS/TCS HU/CM (TCS OFF light circuit short to ground in ABS/TCS HU/CM).
		No	Go to next step.
*5	**VERIFY WHETHER MALFUNCTION IS IN WIRING HARNESS (BETWEEN INSTRUMENT CLUSTER AND ABS/TCS HU/CM FOR SHORT TO GROUND) OR INSTRUMENT CLUSTER** • Disconnect instrument cluster (16-pin). • Connect **SST** (adapter harness) (vehicle harness side only). • Is there continuity between **SST** (adapter harness) connector Terminal O and ground.	Yes	Repair wiring harness between ABS/TCS HU/CM (Terminal O) and instrument cluster.
		No	Replace instrument cluster (short to ground in instrument cluster).

P

STEP	INSPECTION		ACTION
*6	**INSPECT TCS OFF SWITCH** • Disconnect TCS OFF switch. • Is TRAC_SW ON displayed on WDS or equivalent?.	Yes	Go to next step.
		No	Replace TCS OFF switch (ON malfunction in TCS OFF switch).
*7	**VERIFY WHETHER MALFUNCTION IS IN WIRING HARNESS (BETWEEN ABS/TCS HU/CM AND TCS OFF SWITCH) OR ABS/TCS HU/CM** • Is there continuity between **SST** (adapter harness) connector Terminal P and ground?	Yes	Repair wiring harness between ABS/TCS HU/CM (Terminal P) and TCS OFF switch.
		No	Replace ABS/TCS HU/CM (TCS OFF switch circuit short to ground in ABS/TCS HU/CM).
*8	**INSPECT WIRING HARNESS BETWEEN ABS/ TCS HU/CM AND DLC -2(DATA LINK CONNECTOR-2) FOR CONTINUITY** • Is there continuity between **SST** (adapter harness) connector Terminal T and DLC-2?	Yes	Go to next step.
		No	Repair wiring harness between ABS/TCS HU/CM (Terminal T) and DLC-2.
*9	**INSPECT WIRING HARNESS BETWEEN ABS/ TCS HU/CM AND DLC-2 FOR SHORT TO B+** • Is voltage **approximately 12 V** at **SST** (adapter harness) connector Terminal T?	Yes	Repair wiring harness between ABS/TCS HU/CM (Terminal T) and DLC-2.
		No	Go to next step.
*10	**INSPECT WIRING HARNESS BETWEEN ABS/ TCS HU/CM AND DLC-2 FOR SHORT TO GROUND** • Is there continuity between **SST** (adapter harness) connector Terminal T and ground?	Yes	Repair wiring harness between ABS/TCS HU/CM (Terminal T) and data link connector.
		No	Replace ABS/TCS HU/CM (communication circuit malfunction in ABS/TCS HU/CM).

End Of Sie

NO.10 THERE IS A MALFUNCTION IN SYSTEM EVEN THOUGH ABS WARNING LIGHT, BRAKE SYSTEM WARNING LIGHT, TCS INDICATOR LIGHT AND TCS OFF LIGHT INDICATE THAT THE SYSTEM IS NORMAL.

AME698543000W25

10	**There is a malfunction in system even though ABS warning light, BRAKE system warning light, TCS indicator light and TCS OFF light indicate that the system is normal.**
[TROUBLESHOOTING HINTS] • **There is a mechanical malfunction in system.**	

Diagnostic procedure

STEP	INSPECTION		ACTION
1	**CHECK FOR DTCs IN ABS/TCS HU/CM** • Have DTCs been recorded in memory?	Yes	Perform inspection using appropriate DTC.
		No	Go to next step.
2	**INSPECT ABS HYDRAULIC UNIT** • Perform “ABS hydraulic unit system inspection”. • Is system okay?	Yes	Inspect conventional brake system.
		No	**If wheels do not rotate:** Replace ABS/TCS HU/CM. **If wheels rotate but order in which wheels rotate is incorrect:** Inspect; brake pipe passage to ABS/TCS HU/CM.

End Of Sie

SUSPENSION

FEATURES

OUTLINE R-2
- OUTLINE OF CONSTRUCTION R-2
- FEATURES R-2
- SPECIFICATIONS R-2

SERVICE

OUTLINE R-3
- SUPPLEMENTAL SERVICE INFORMATION R-3

WHEEL ALIGNMENT R-3
- FRONT WHEEL ALIGNMENT R-3
- REAR WHEEL ALIGNMENT R-5

FRONT SUSPENSION R-5
- FRONT CROSSMEMBER REMOVAL/ INSTALLATION R-5

REAR SUSPENSION R-6
- TORSION BEAM AXLE REMOVAL/ INSTALLATION R-6

OUTLINE

OUTLINE OF CONSTRUCTION

AME740201013W01

- The construction and operation of suspension system is essentially carried over from that of the previous MPV (LW), except for the following features. (See MPV Training Manual 3340-1*-99F.) (See MPV Workshop Manual 1666-1*-99F.)

End Of Sie

FEATURES

AME740201013W02

Improved Handling Stability and Riding Comfort

- Front wheel alignment has been changed.
- Trailing arm bushing has been changed.

Improved Marketability

- 16-inch wheels and tires have been adopted. (For European (L.H.D. U.K.), General (R.H.D.), Australian specs.)

End Of Sie

SPECIFICATIONS

AME740201013W03

Item				Specification	
				New MPV (LW)	Previous MPV (LW)
Front suspension	Suspension type			Strut	
	Shock absorber type			Cylindrical, double-acting (low-pressure gas charged)	
	Spring type			Coil spring	
	Stabilizer	Type		Torsion bar	
		Diameter	(mm {in})	18.0 {0.71}	
	Wheel alignment (Unloaded*1)	Maximum steering angle	Inner	37°06′±3°	
			Outer	32°±3°	
		Total toe-in	(mm {in})	Rim inner: 1±3 {0.04±0.12}, Tire: 2±4 {0.08±0.16}	
			(degree)	0°11′±0°22′	
		Camber angle*2		–0°14′±1°	–0°54′±1°
		Caster angle*2		2°02′±1°	1°54′±1°
		Steering axis inclination (Reference value)		11°11′	11°35′
Rear suspension	Suspension type			Torsion beam	
	Shock absorber type			Cylindrical, double-acting (low-pressure gas charged)	
	Spring type			Coil spring	
	Stabilizer	Type		Torsion bar	
		Diameter	(mm {in})	34.0 {1.34}	
	Wheel alignment (Unloaded*1)	Total toe-in	(mm {in})	Rim inner: 2±3 {0.08±0.12}, Tire: 3±4 {0.12±0.16}	
			(degree)	0°17′±0°22′	
		Camber angle*2 (Reference value)		–1°±1°	
		Thrust angle (Reference value)		0°±48′	

Bold frames: New specifications

*1 : Fuel tank full. Engine coolant and engine oil are at specified levels. Spare tire, jack and tools are in designated positions.

*2 : Difference between left and right must not exceed 1°30′.

End Of Sie

OUTLINE

SUPPLEMENTAL SERVICE INFORMATION

AME740201013W04

- The following changes have been made since publication of the MPV Workshop Manual (1666-1*-99F).

Front wheel alignment

- Specifications have been modified.

Front crossmember

- Removal/installation procedure has been modified.

Torsion beam axle

- Removal/installation procedure has been modified.

End Of Sub

WHEEL ALIGNMENT

FRONT WHEEL ALIGNMENT

AME741201015W01

Specification (Unloaded)*1

Item		Fuel gauge indication				
		Empty	1/4	1/2	3/4	Full
Total toe-in	(mm {in})	Rim inner: 1±3 {0.04±0.12}, Tire: 2±4 {0.08±0.16}				
	(degree)	0°11′±0°22′				
Maximum steering angle	Inner	37°06′±3°				
	Outer	32°±3°				
Caster angle*2		1°57′±1°	1°58′±1°	1°59′±1°	2°00′±1°	2°02′±1°
Camber angle*2		–0°12′±1°		–0°13′±1°		–0°14′±1°
Kingpin angle (reference value)		11°08′	11°09′	11°10′	11°11′	

*1 : Engine coolant and engine oil are at specified levels. Spare tire, jack and tools are in designated positions.
*2 : Difference between left and right must not exceed 1°30'.

Camber Adjustment

Note

- Adjustable value is **30′**.

1. Jack up the vehicle and remove the wheel and tire.
2. Remove the indicated bolt and replace it with the adjusting bolt and washer.

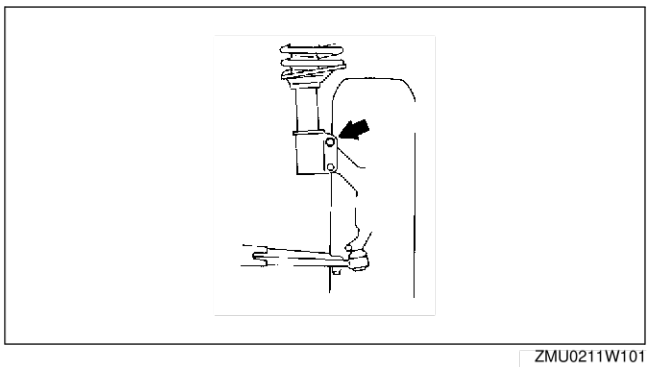

ZMU0211W101

R

3. Adjust in the following procedures.
   - In case of adjusting to + (positive) side, install the adjusting bolt and washer so that the projection of the washer faces inside (shock absorber side) as shown.

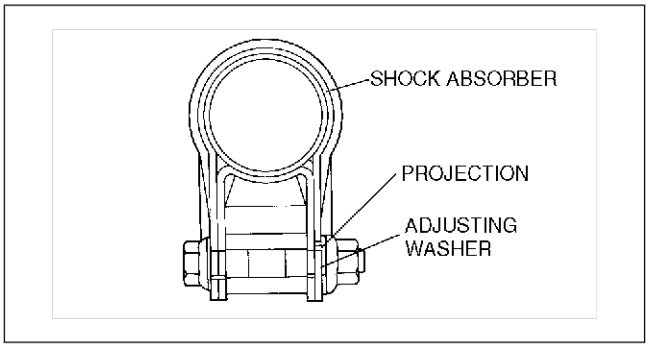

ZMU0211W103

   - In case of adjusting to - (negative) side, install the adjusting bolt and washer so that the projection of the washer faces outside (steering knuckle side) as shown.

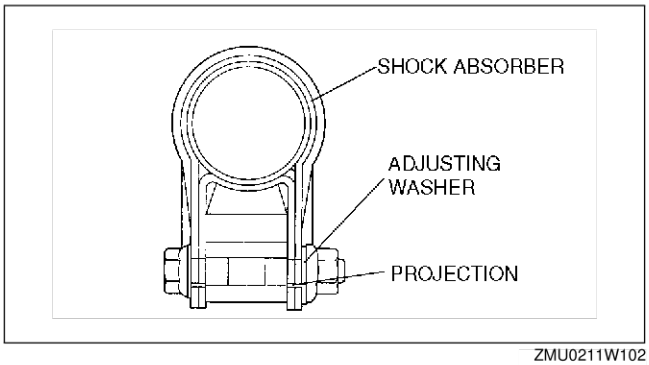

ZMU0211W102

4. Tighten the nut within the specified torque.

   Tightening torque
   102.9—122.5 N·m
   {10.50—12.49 kgf·m, 75.90—90.35 ft·lbf}

5. Install the wheel and tire, then jack down the vehicle.
6. Shake the vehicle to settle the suspension.
7. Inspect the camber and readjust it if necessary.

Caster Adjustment

1. Jack up the front of the vehicle and support it on safety stands.
2. Remove the mounting block nuts.

   Caution
   - **Adjust the caster by turning the mounting block as shown so that the direction indicator is located at position A. If the direction indicator faces toward the inside of the vehicle, the camber and caster will be out of specifications.**

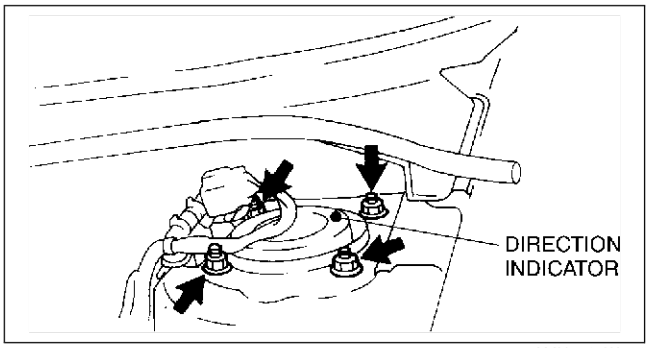

AMU0213W011

3. Push the mounting block downward, and turn the direction indicator to position A.

   Adjustable value
   –30′

4. Install and tighten the mounting nuts within the specified torque.

   Tightening torque
   46.1—62.7 N·m
   {4.71—6.39 kgf·m, 34.1—46.2 ft·lbf}

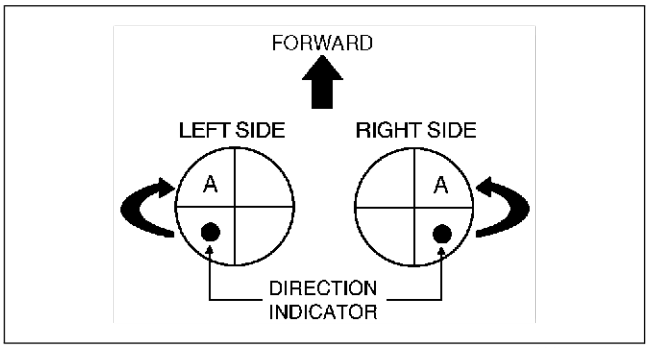

AMU0213W010

End Of Sie

REAR WHEEL ALIGNMENT

AME741201016W01

Specification (Unloaded)*1

Item		Fuel gauge indication				
		Empty	1/4	1/2	3/4	Full
Total toe-in	(mm {in})	3±4 {0.12±0.16}				
	(degree)	0°17′±0°22′				
Camber angle (reference value)		–1°±1°				

*1 : Engine coolant and engine oil are at specified level. Spare tire, jack and tools are in designated position.

Rear Wheel Alignment Adjustment

1. If rear wheel alignment is not within specification, inspect for the body and torsion beam axle damage. Repair or replace if necessary.

Note
- Rear wheel alignment is not adjustable.

End Of Ste

FRONT SUSPENSION

FRONT CROSSMEMBER REMOVAL/INSTALLATION

AME741434800W01

1. Remove the front pipe. (L3) (See F3–73 EXHAUST SYSTEM REMOVAL/INSTALLATION.)
   Remove the front pipe and TWC. (AJ) (See F4–81 EXHAUST SYSTEM REMOVAL/INSTALLATION.)
   Remove the flexible pipe. (MZR-CD (RF Turbo)) (See F5–86 EXHAUST SYSTEM REMOVAL/INSTALLATION.)
2. Remove the extension bar and change control rod. (L3 MTX only)
3. Remove the engine mount member.
4. Remove the steering gear and linkage. (See N–8 STEERING GEAR AND LINKAGE REMOVAL/INSTALLATION.)
5. Remove the transverse member.
6. Remove the front lower arm.
7. Remove in the order indicated in the table.

1	Stabilizer control link nut
2	No.1 engine mount center bolt
3	No.1 engine mount bracket (MZR-CD (RF Turbo) only)
4	Crossmember component (See R–5 Crossmember Component Removal Note)
5	Front stabilizer
6	No.1 engine mount
7	Front crossmember

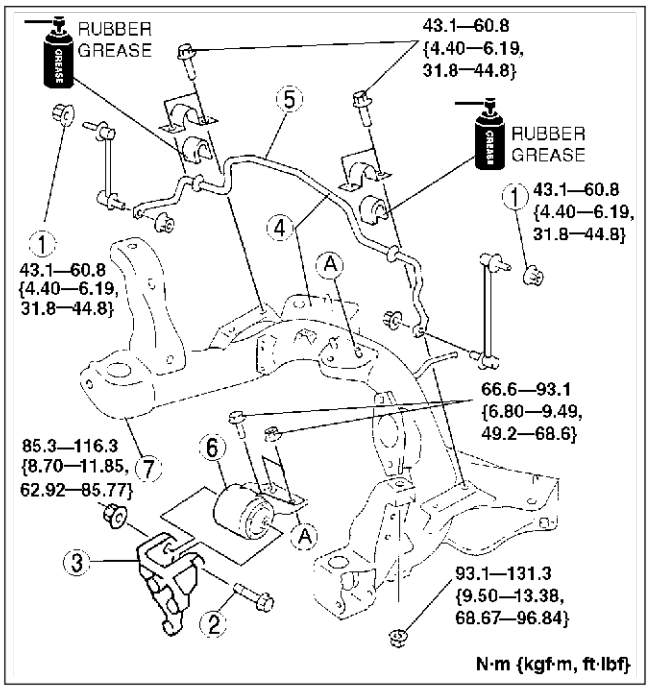

AME7414W001

8. Install in the reverse order of removal.
9. Inspect the front wheel alignment if necessary.

Crossmember Component Removal Note

1. Support the crossmember using a jack and remove the bolts and nuts.
2. Remove the crossmember component.

End Of Ste

REAR SUSPENSION

TORSION BEAM AXLE REMOVAL/INSTALLATION

AME741628320W01

Caution

- **Performing the following procedures without first removing the ABS wheel-speed sensor may possibly cause an open circuit in the harness if it is pulled by mistake. Before performing the following procedures, remove the ABS wheel-speed sensor (axle side) and fix it to an appropriate place where the sensor will not be pulled by mistake while servicing the vehicle.**
- **Be careful when using the jack to avoid damaging the brake pipe and hose.**

1. Remove in the order indicated in the table.
2. Install in the reverse order of removal.
3. Bleed the air from the brake system.

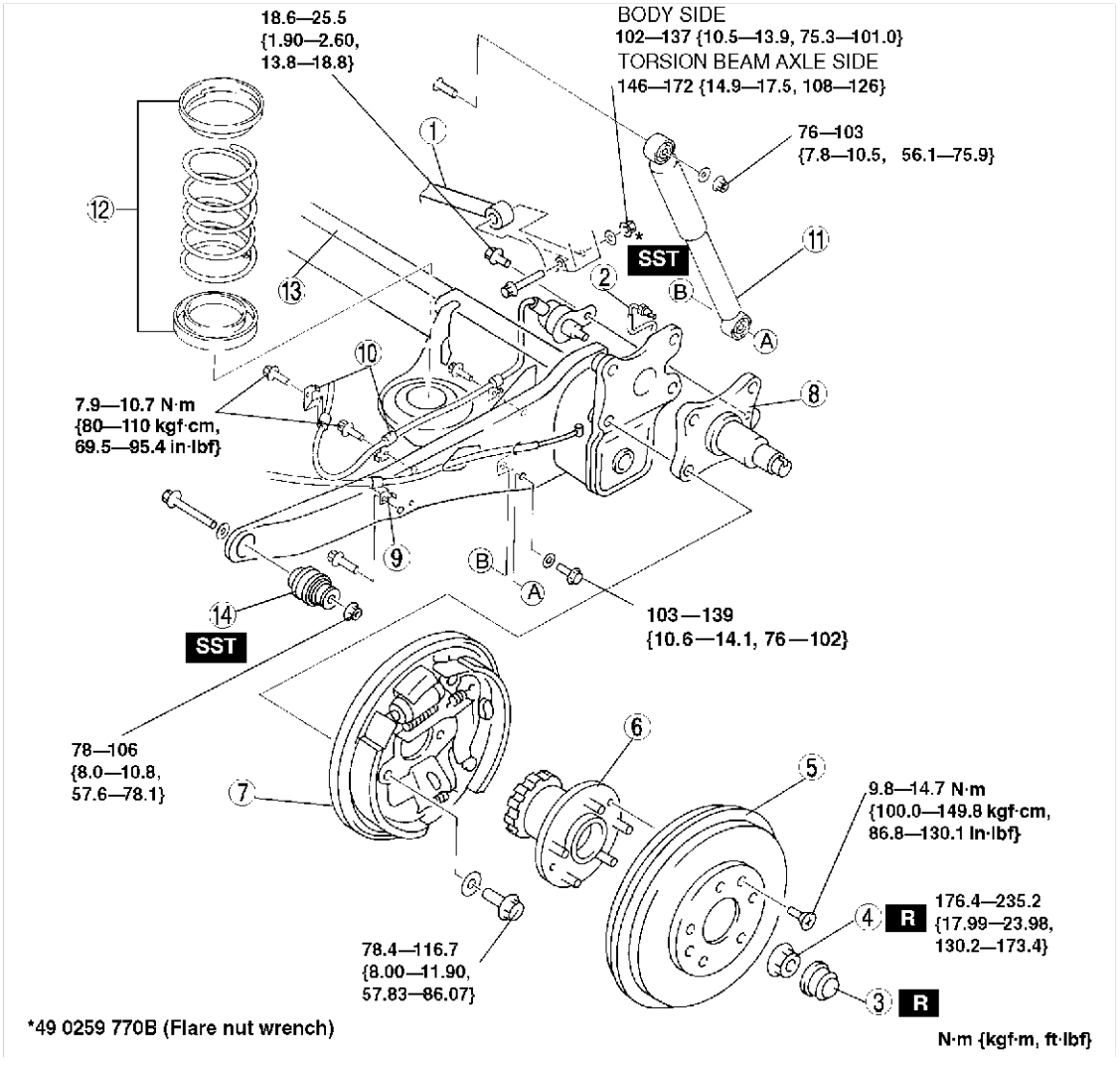

AMU0214W001

1	Lateral rod (See R–7 Lateral Rod Removal Note) (See R–8 Lateral Rod Installation Note)
2	Brake pipe
3	Hub cap
4	Locknut
5	Brake drum
6	Wheel hub and ABS sensor rotor
7	Rear brake component

8	Hub spindle
9	Parking brake cable bracket
10	ABS sensor harness bracket, ABS sensor and bolt
11	Rear shock absorber
12	Coil spring component
13	Torsion beam axle (See R–7 Torsion Beam Axle Removal Note)
14	Trailing arm bushing (See R–7 Trailing Arm Bushing Removal Note) (See R–8 Trailing Arm Bushing Installation Note)

Lateral Rod Removal Note

Note
- Jacking up the vehicle exerts force on the lateral rod, and makes it difficult to service. Lower the four wheels on the ground when servicing.

Torsion Beam Axle Removal Note

1. Hold the center of the torsion beam axle using a jack.
2. Jack down the torsion beam axle gradually, and remove the torsion beam axle.

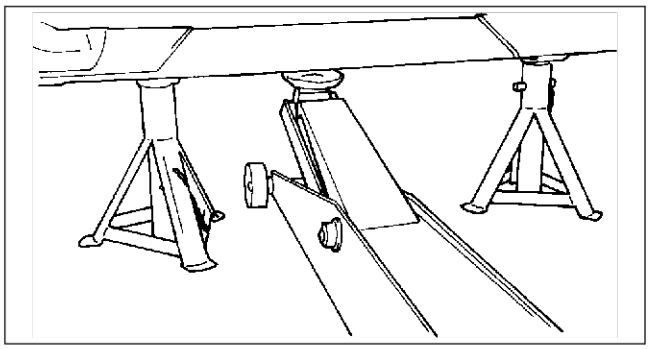

YMU214WA6

Trailing Arm Bushing Removal Note

1. In order to set the installation position, mark the torsion beam axle in alignment with the small projection of the trailing arm bushing, as shown in the figure.

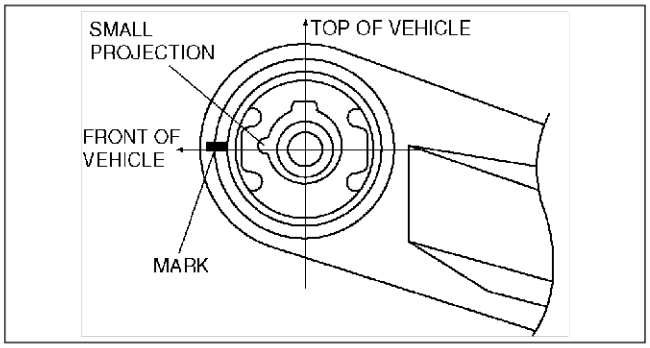

AMU0214W004

2. Press the trailing arm bushing out from the outer side of the trailing arm to the inner side using the **SSTs**.

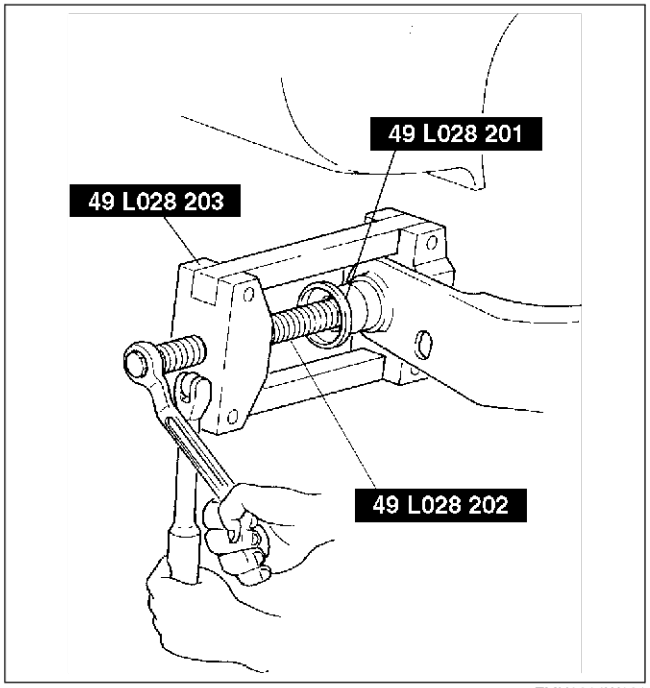

ZMU0214W121

R

Trailing Arm Bushing Installation Note

1. Set the trailing arm bushing by aligning the small projection with the mark, as shown in the figure.

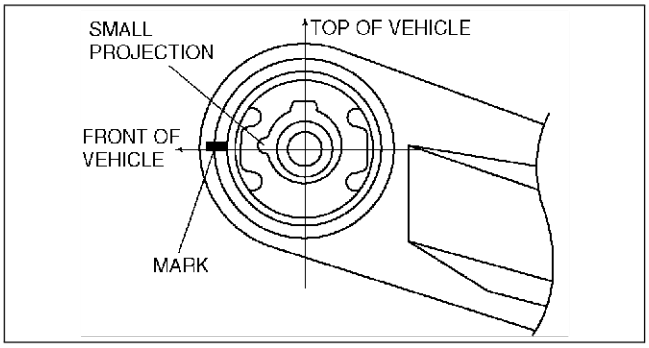

AMU0214W004

2. Press the trailing arm bushing in from the inner side of the trailing arm to the outer side using the **SSTs**.

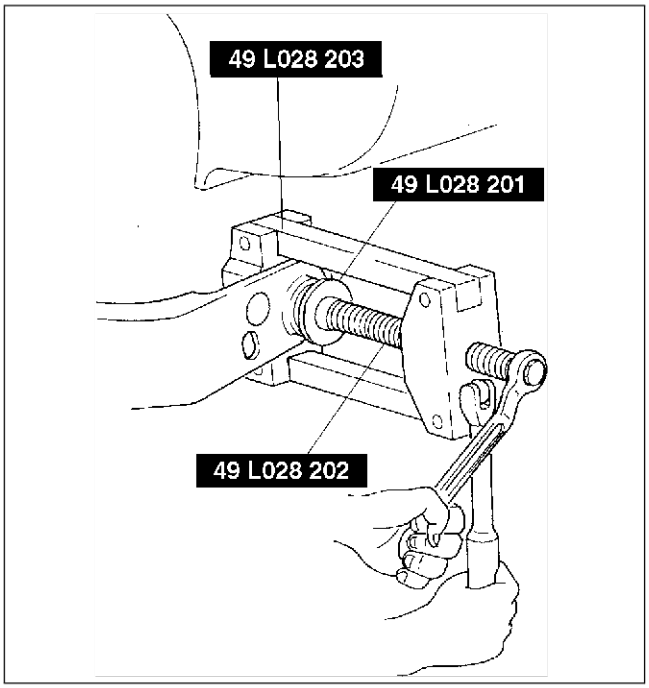

AME7416W001

Lateral Rod Installation Note

1. Set the direction mark at the left side of the vehicle faceing the backward, and install the lateral rod.

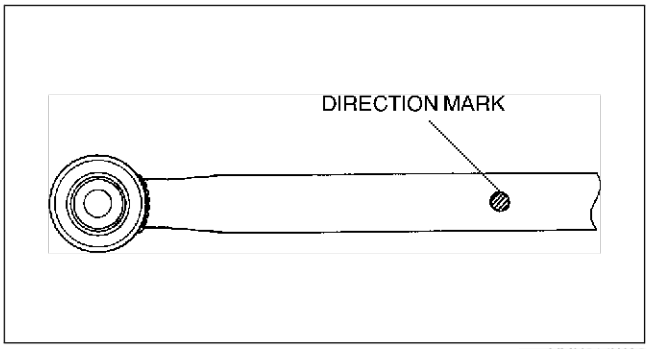

YMU214WA9

End Of Sec

BODY

FEATURES

OUTLINE S-2
OUTLINE OF CONSTRUCTION S-2
FEATURES S-2
DOOR S-2
OUTLINE S-2
STRUCTURAL VIEW S-2
POWER WINDOW SYSTEM S-3
OUTLINE S-3
SYSTEM WIRING DIAGRAM S-3
POWER DOOR LOCK SYSTEM S-4
OUTLINE S-4
STRUCTURAL VIEW S-4
SYSTEM WIRING DIAGRAM S-5
EXTERIOR ATTACHMENT S-6
OUTLINE S-6
STRUCTURAL VIEW S-6
SPARE TIRE CARRIER S-7
SEAT S-9
OUTLINE S-9
STRUCTURAL VIEW S-9
SECOND-ROW SEAT S-10
THIRD-ROW SEAT S-10

SERVICE

OUTLINE S-12
SUPPLEMENTAL SERVICE INFORMATION ... S-12
BONNET S-13
BONNET ADJUSTMENT S-13
DOOR S-14
SLIDING DOOR DISASSEMBLY/ASSEMBLY .. S-14
POWER WINDOW SYSTEM S-16
POWER WINDOW MAIN SWITCH INSPECTION S-16
TWO-STEP DOWN FUNCTION OPERATIVE/NON-OPERATIVE SWITCHING PROCEDURE S-18
DOOR GLASS POSITION CHANGE PROCEDURE S-19
POWER DOOR LOCK SYSTEM S-20
KEYLESS UNIT REMOVAL/INSTALLATION S-20
KEYLESS UNIT DISASSEMBLY/ASSEMBLY S-20
KEYLESS UNIT INSPECTION S-21
BUMPER S-23
FRONT BUMPER REMOVAL/INSTALLATION S-23
FRONT BUMPER DISASSEMBLY/ASSEMBLY S-23
EXTERIOR ATTACHMENT S-24
RADIATOR GRILLE REMOVAL/INSTALLATION S-24
SPARE TIRE CARRIER REMOVAL/INSTALLATION S-24
DASHBOARD AND CONSOLE S-25
CONSOLE LOWER COVER REMOVAL/INSTALLATION S-25
FRONT CONSOLE DISASSEMBLY/ASSEMBLY S-25
REAR CONSOLE REMOVAL/INSTALLATION S-26
FLOOR COVERING S-26
FRONT FLOOR COVERING REMOVAL/INSTALLATION S-26
REAR FLOOR COVERING REMOVAL/INSTALLATION S-27
TRIM S-28
TRUNK SIDE TRIM REMOVAL/INSTALLATION S-28
SEAT BELT S-28
THIRD-ROW BUCKLE REMOVAL/INSTALLATION S-28
SEAT S-29
FRONT SEAT DISASSEMBLY/ASSEMBLY S-29
SECOND-ROW SEAT REMOVAL/INSTALLATION S-31
SECOND-ROW SEAT REMOVAL S-32
SECOND-ROW SEAT INSTALLATION S-32
SECOND-ROW SEAT DISASSEMBLY/ASSEMBLY S-32-1
THIRD-ROW SEAT REMOVAL/INSTALLATION S-33
THIRD-ROW SEAT DISASSEMBLY/ASSEMBLY S-34
LONG SLIDER AND ADAPTER REMOVAL/INSTALLATION S-35
SEAT WARMER SWITCH INSPECTION S-36
TROUBLESHOOTING [POWER WINDOW SYSTEM] S-37
FOREWORD S-37
BASIC POWER WINDOW SYSTEM INSPECTION S-37
TROUBLESHOOTING [KEYLESS ENTRY SYSTEM] S-40
ON-BOARD DIAGNOSTIC FUNCTION S-40
TROUBLESHOOTING INDEX S-40
NO. 1 ONE OR MORE ON-BOARD DIAGNOSTIC FUNCTIONS INOPERATIVE S-41
NO. 2 ALL ON-BOARD DIAGNOSTIC FUNCTIONS INOPERATIVE S-43

S

OUTLINE

OUTLINE OF CONSTRUCTION

AME770201086W01

- The construction and operation of the body system is essentially carried over from that of the previous MPV (LW) model, except for the following features. (See MPV Training Manual 3340-1*-99F.)

End Of Sie

FEATURES

AME770201086W02

Improved Safety

- Child restraint seat anchors have been adopted. (ISOFIX and tether strap anchor)

Improved Convenience

- The open lock have been adopted for the sliding door.
- An answer back function has been adopted for the keyless entry system. (Except vehicles with theft-deterrent system)
- The IG OFF timer function and the two-step down function have been adopted for the power window system.
- A side table has been adopted for the passenger-side front seat.
- Assist grips have been adopted for the front seat backs.
- A sliding mechanism has been adopted for the second-row seats.
- A side-sliding mechanism has been adopted for the left-hand side second-row seat.
- A third-row seat that can be stowed has been adopted. Due to this the spare tire stowage position has changed.

End Of Sie

DOOR

OUTLINE

AME771400157W01

- The open lock that holds the door at fully open position has been adopted.

End Of Sie

STRUCTURAL VIEW

AME771400157W02

- When the sliding door is opened fully, the door is held at the fully open position so that it does not slide in the close direction.
- As the cable is linked with the outer and inner handles, the cable is pulled when either handle is operated (1). Due to this, the latch is released, and the sliding door moves.

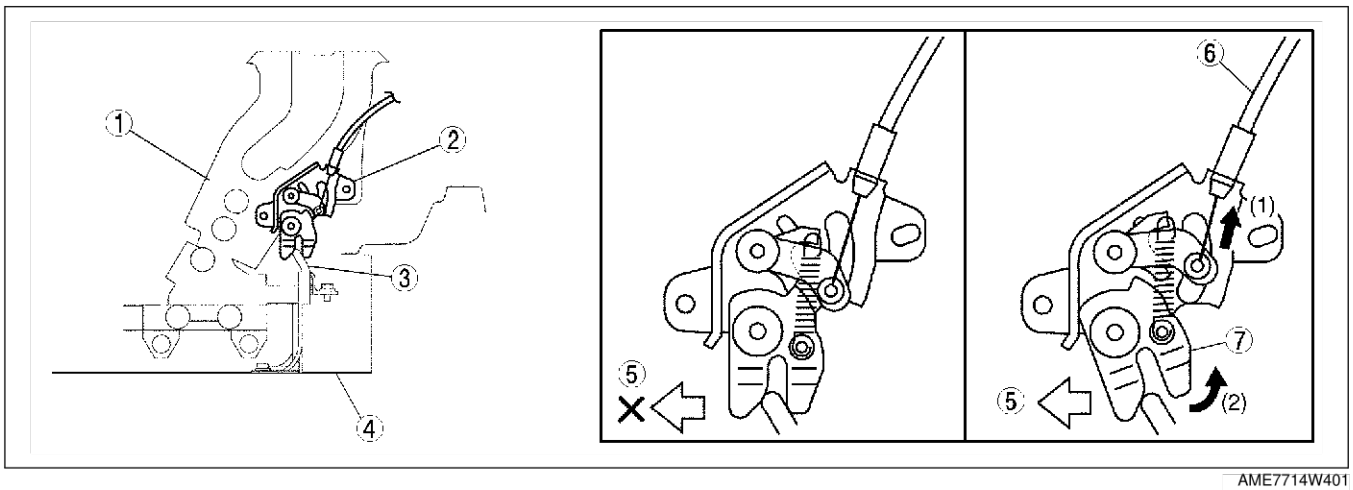

AME7714W401

1	Lower roller
2	Open lock
3	Striker
4	Body

5	Close slide
6	Cable
7	Latch

End Of Sie

POWER WINDOW SYSTEM

OUTLINE

AME771658000W01

- The function, structure and operation of the power window system is essentially carried over from that of the previous MPV (LW) model, except for the following.
  - — IG OFF timer function has been adopted. The function is the same as that of the current 121/121 DEMIO (DW) model. (See Mazda 121/121 DEMIO Workshop Manual Supplement 1675-1*-00A.)
  - — Two-step down function has been adopted for the driver-side power window system. The function is the same as that of the current PREMACY (CP) model. (See Mazda PREMACY Workshop Manual Supplement 1718-1*-01G.)

End Of Sie

SYSTEM WIRING DIAGRAM

AME771658000W02

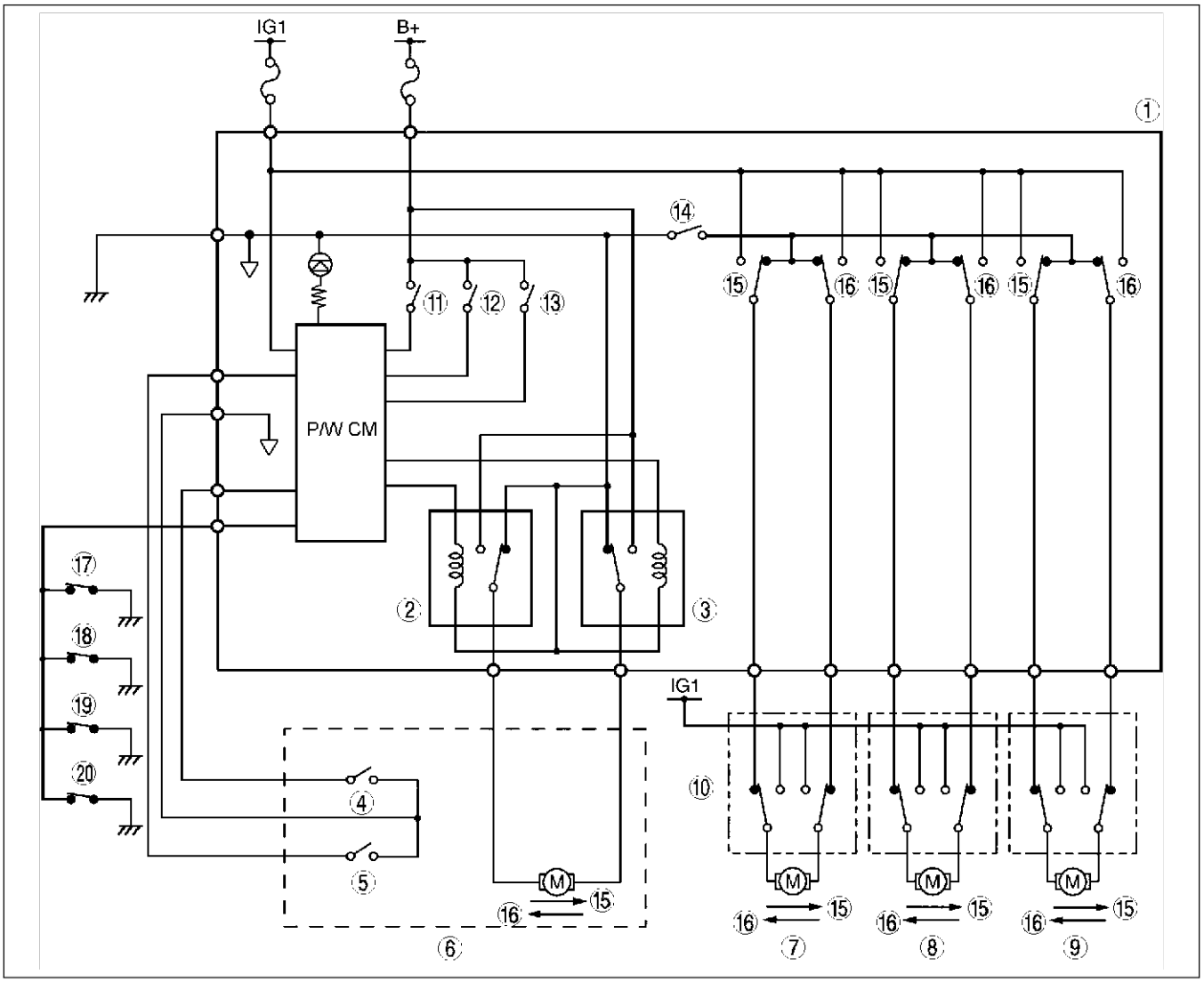

AME7716W001

1	Power window main switch
2	Close relay
3	Open relay
4	Pulse generator
5	Limit switch
6	Front power window regulator (Driver's side)
7	Front power window regulator (Passenger's side)
8	Rear power window regulator (Right side)
9	Rear power window regulator (Left side)
10	Power window subswitch

11	Manual close
12	Manual open
13	Auto
14	Power-cut switch
15	Close
16	Open
17	Door switch (Driver's side)
18	Door switch (Passenger's side)
19	Door switch (Rear right side)
20	Door switch (Rear left side)

S

POWER DOOR LOCK SYSTEM

OUTLINE

AME771866000W01

- The function, structure and operation of the power door lock system is essentially carried over from that of the previous MPV (LW) model, except for the following.
  - — An answer back function has been adopted for the keyless entry system. (Except vehicles with theft-deterrent system) The function is the same as that of the current MX-5 (NB) model. (See Mazda MX-5 Workshop Manual Supplement 1698-1*-00H.)
  - — An auto lock function has been adopted for the keyless entry system. The function is the same as that of the current 626/626 Station Wagon (GF, GW) model. (See 626/626 Station Wagon Workshop Manual Supplement 1671-1*-99I.) (See 626/626 Station Wagon Workshop Manual Supplement 1670-10-99J.)
  - — Installation position of the keyless unit has been changed from the LH rear side panel to the lower part of the dashboard.

End Of Sec

STRUCTURAL VIEW

AME771866000W02

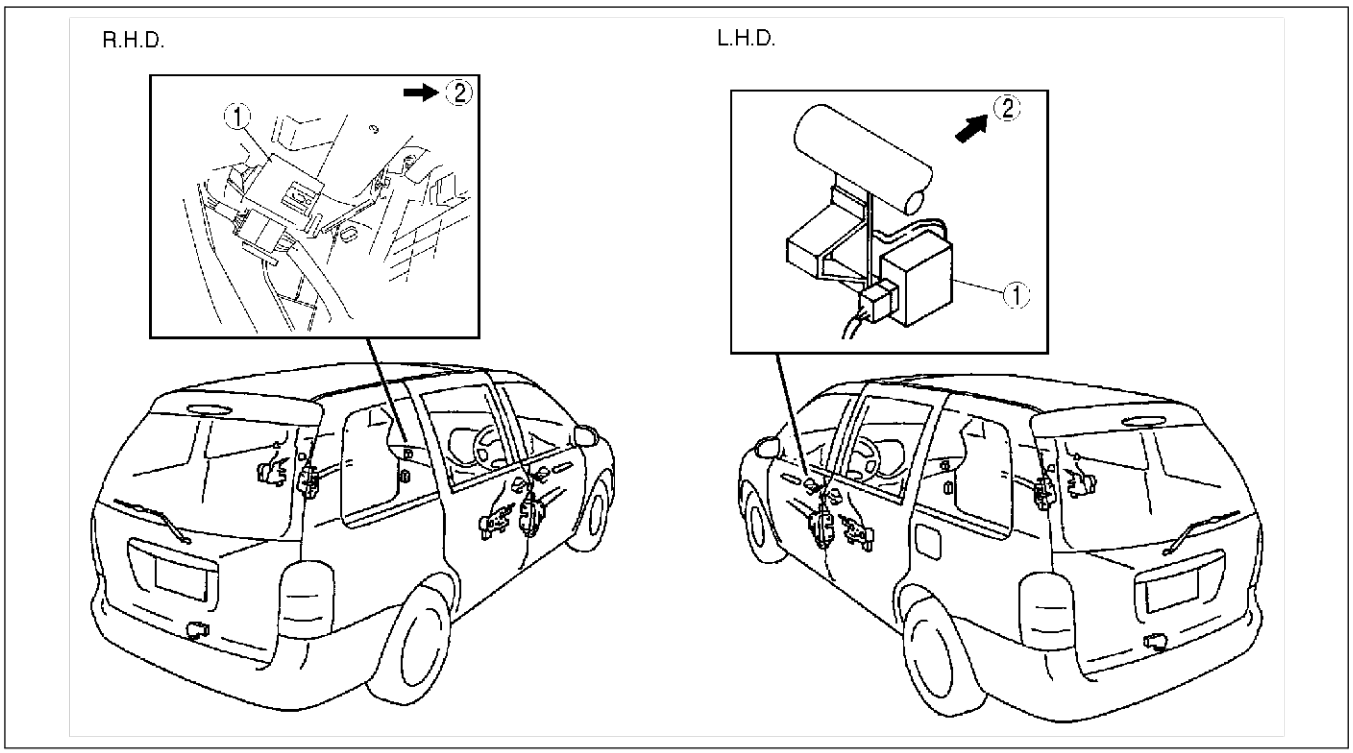

AME7718W001

1	Keyless unit
2	Front

End Of Sec

SYSTEM WIRING DIAGRAM

AME771866000W03

Keyless Entry System

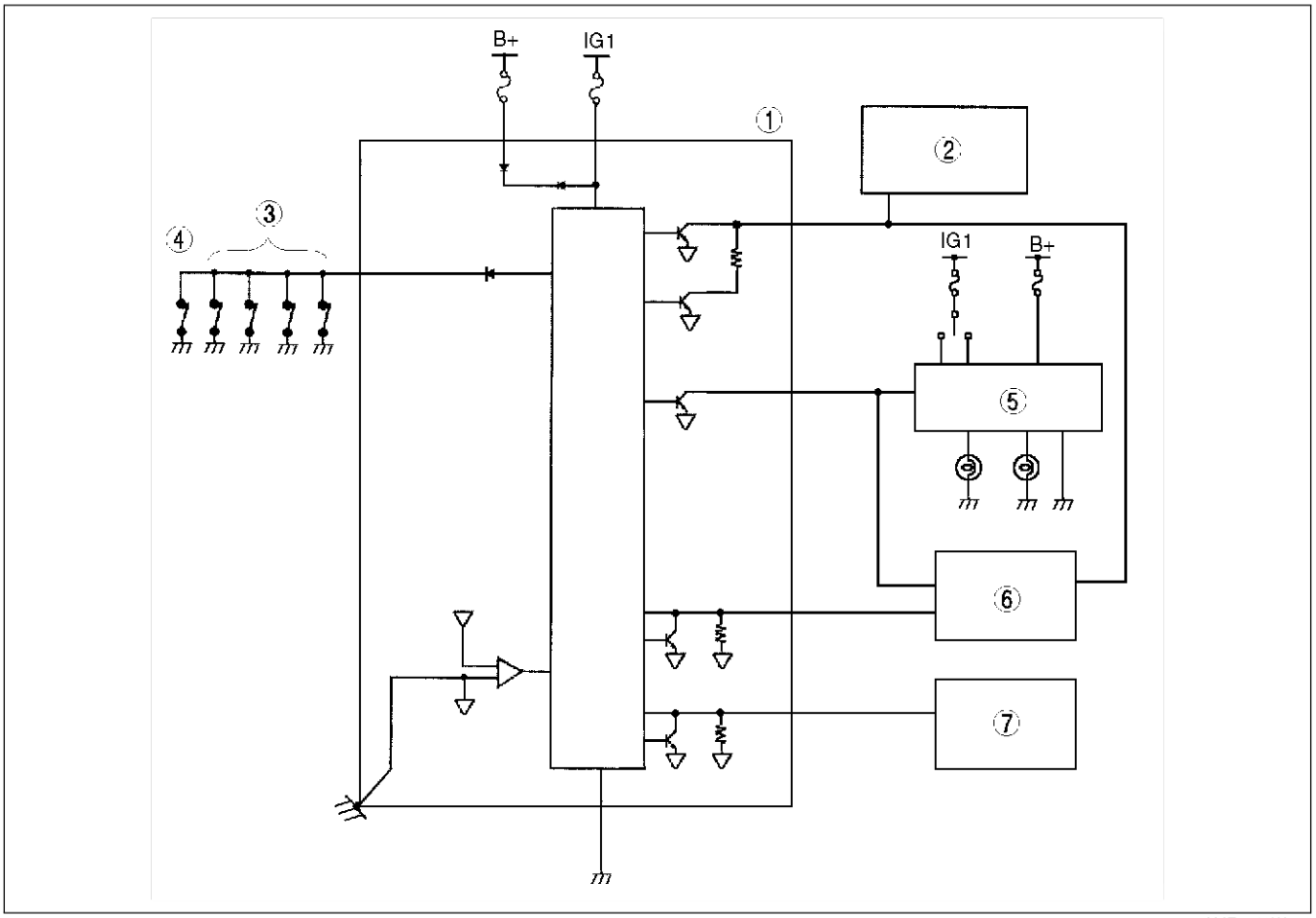

AME7718W002

1	Keyless unit
2	Door lock timer unit
3	Door switch
4	Cargo compartment light switch

5	Flasher unit
6	Theft-deterrent control module
7	Horn relay (Australian specs. only)

End Of Sta

S

EXTERIOR ATTACHMENT

OUTLINE

AME7728567C0W01

- A third-row seat that can be stowed has been adopted. Due to this the spare tire stowage position has changed. A spare tire carrier has also been adopted.
- The spare tire carrier is designed to secure the spare tire under the vehicle until it is needed.
- The spare tire carrier prevents the tire from hitting the ground, and the anchor from hitting the fuel tank or exhaust pipes.
- The carrier design incorporates safeguards which prevent the spare tire lever from being removed when:
  - — The spare tire is installed on the carrier upside down.
  - — A tire other than the spare tire is installed on the carrier.
  - — The spare tire carrier anchor is not completely raised.
    - If the spare tire carrier's cable breaks, the carrier's hook is designed to lock the anchor and prevent the spare tire from falling.

End Of Sie

STRUCTURAL VIEW

AME7728567C0W02

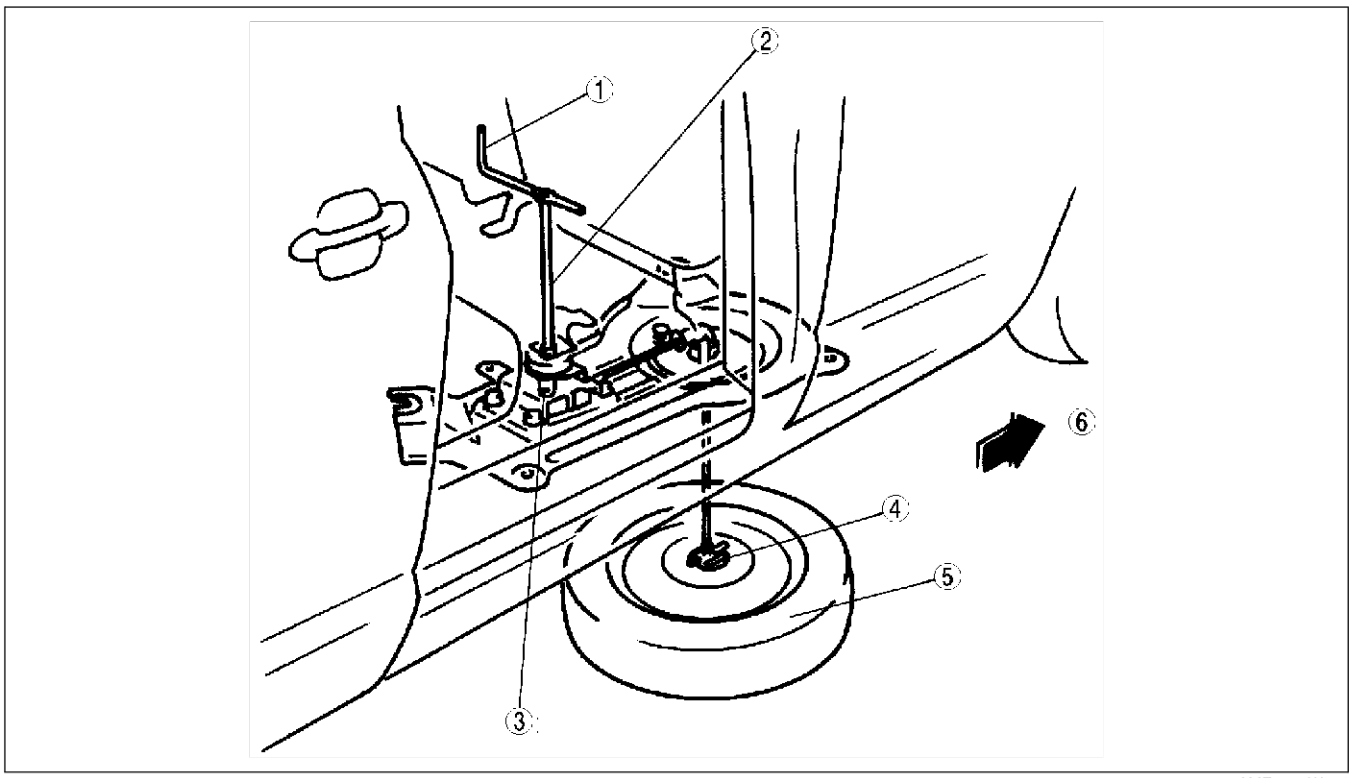

AME7728W091

1	Jack handle
2	Spare tire lever
3	Spare tire carrier

4	Anchor
5	Spare tire
6	Front

End Of Sie

SPARE TIRE CARRIER

AME7728567C0W03

Operation

1. When the jack handle is rotated, the cable is wound clockwise and the spare tire is raised. Until the anchor is completely seated, the spare tire lever is held between links A and B and cannot be removed.

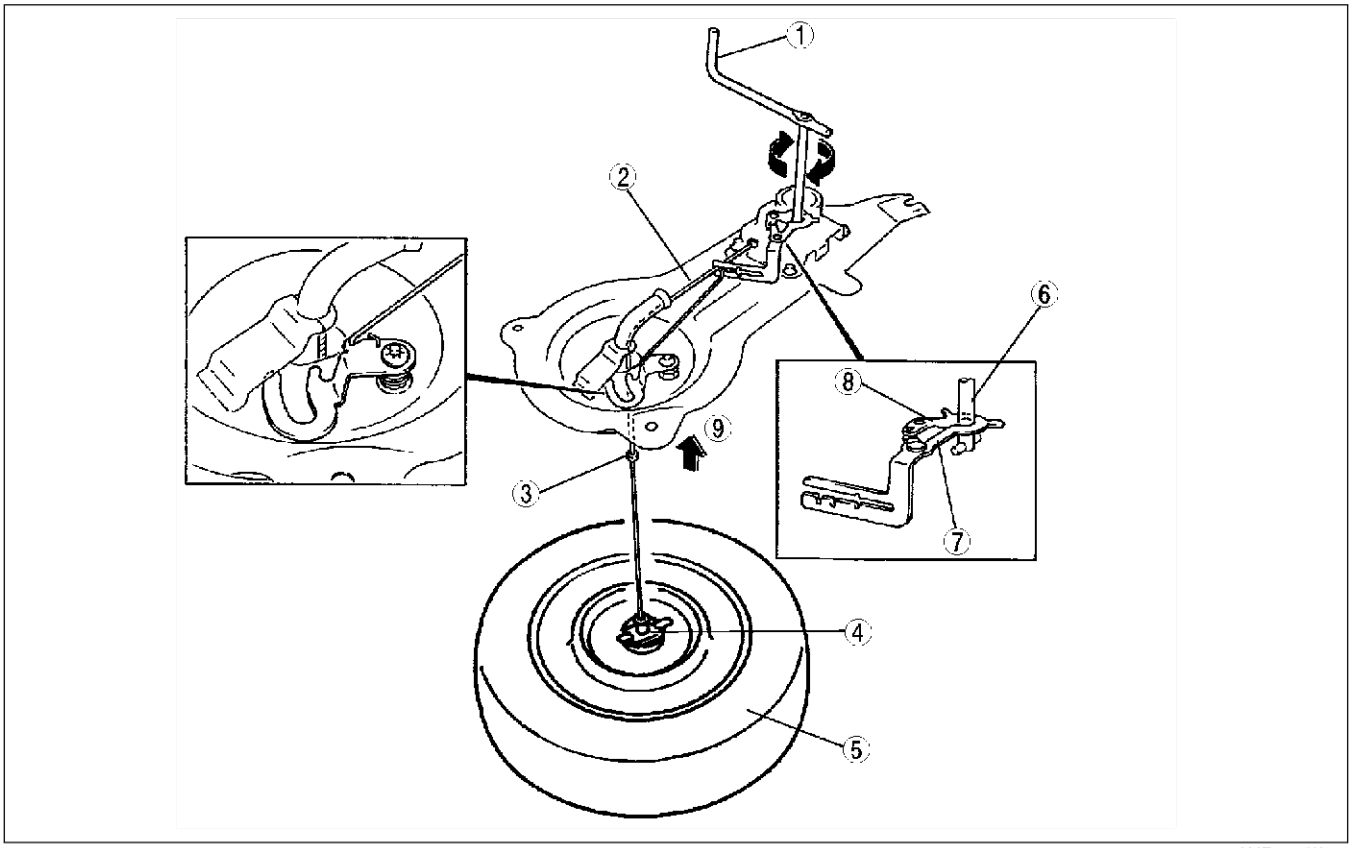

AME7728W101

1	Jack handle
2	Cable
3	Ring
4	Anchor
5	Spare tire

6	Spare tire lever
7	Link A
8	Link B
9	Up

S

2. When the cable is wound until just before the tire is secured, the ring attached to the cable contacts link A.

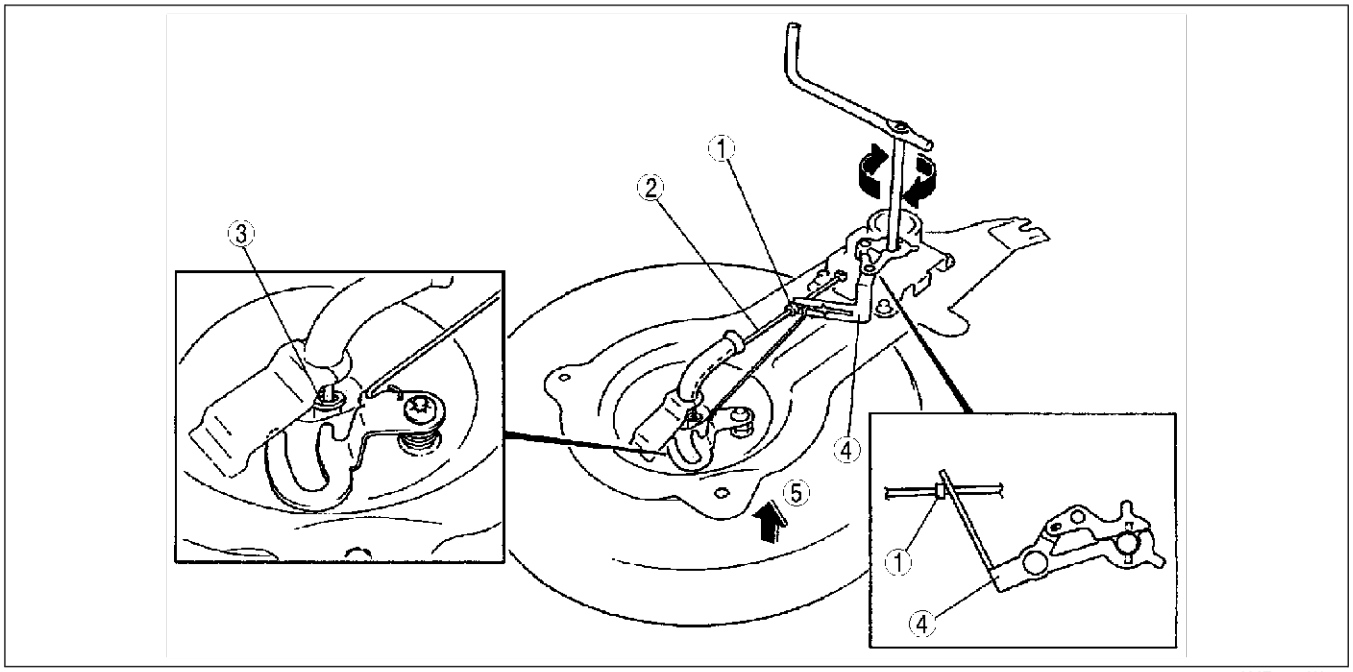

AME7728W102

1	Ring
2	Cable
3	Anchor

4	Link A
5	Up

3. The spare tire lever can be removed when the anchor is completely seated, and links A and B are connected and pushed outward, locking the anchor and tire in place. If the cable should break in the section marked C, the cap prevents links A and B from moving in the directions marked D.

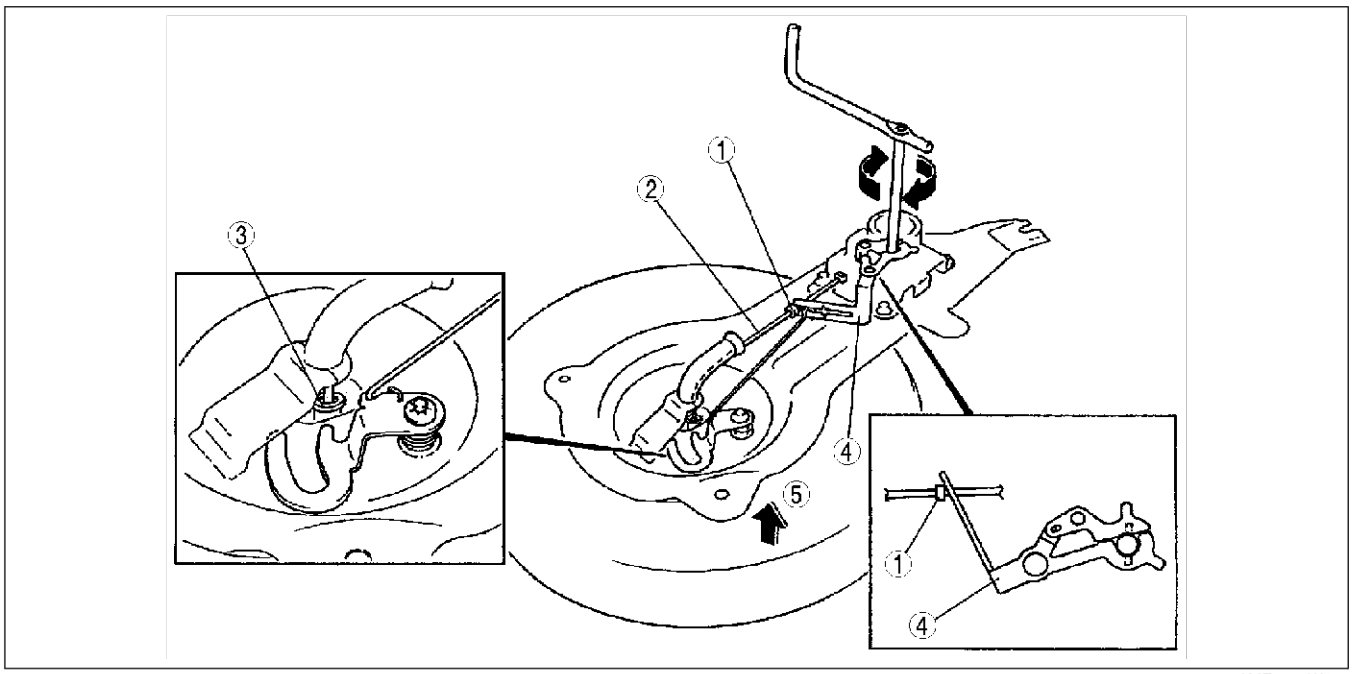

AME7728W102

1	Spare tire lever
2	Cap
3	Link A
4	Link B
5	Cable
6	Lock

7	Anchor
8	Ring
9	Socket
10	Push
11	Remove

SEAT

OUTLINE

AME775257100W01

- A front seat back assist grip and hook have been adopted for improvement of second-row seat passenger convenience.
- A side table on the passenger-side front seat has been adopted.
- A sliding mechanism has been adopted for the second-row seats.
- A side-sliding mechanism has been adopted for the left-hand side second-row seat. (General (R.H.D.) specs.)
- A side-sliding mechanism has been adopted for the right-hand side second-row seat. (European (L.H.D.) specs.)
- Child restraint seat anchors have been adopted. There are two types of anchors used for child restraint systems: the ISOFIX and tether strap anchors.

Caution

- **Installation procedure varies with the type of child restraint seat. When installing a child restraint seat, be sure to follow the prescribed procedure for each type.**
- **A child restraint seat using a tether strap cannot be completely secured with only the tether strap. Use an ISOFIX anchor, or a rear seat belt in conjunction with the anchor used with the tether strap.**

End Of Sta

STRUCTURAL VIEW

AME775257100W02

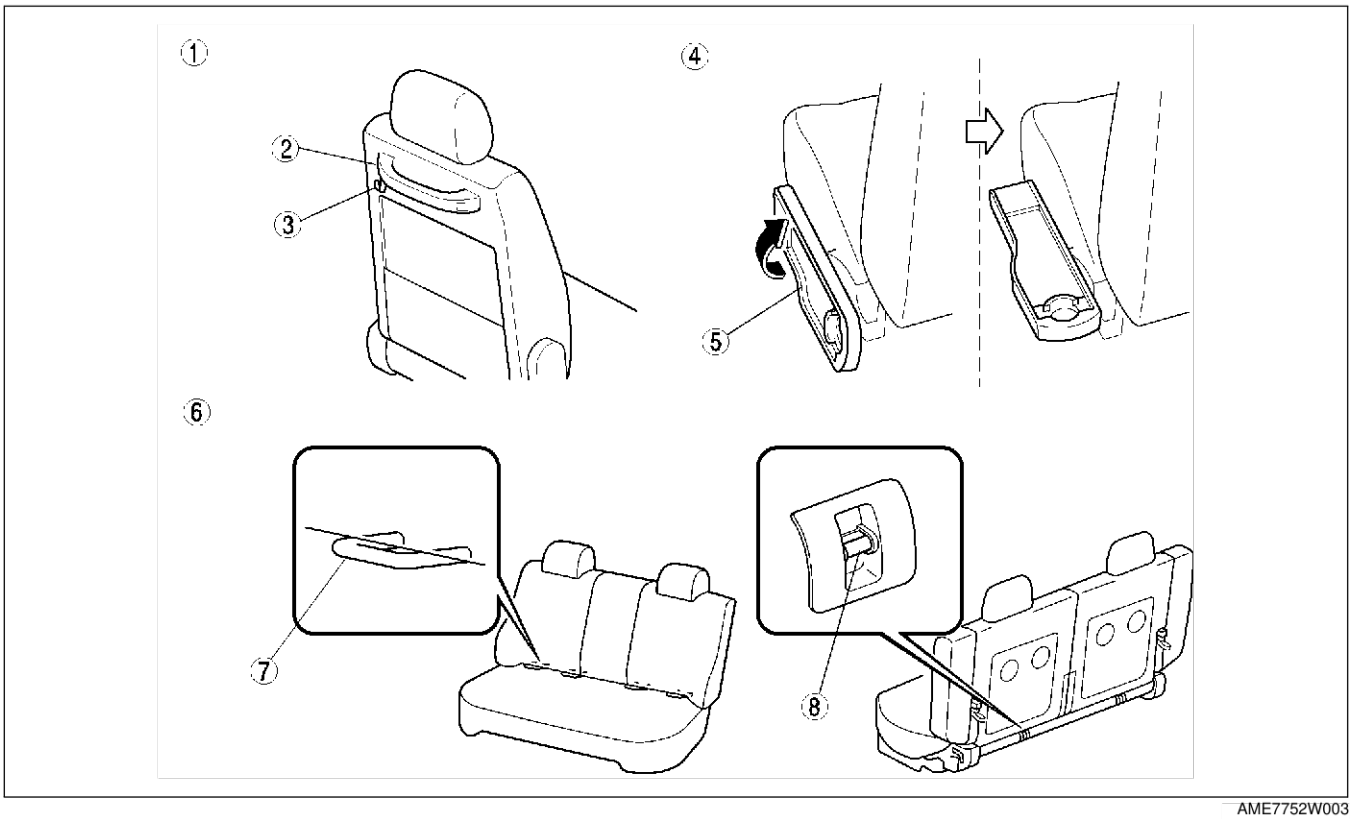

AME7752W003

1	Front seat back
2	Assist grip
3	Hook
4	Passenger-side front seat

5	Side table
6	Second-row seat
7	ISOFIX anchor
8	Tether strap anchor (Except Australian specs.)

End Of Sta

S

SECOND-ROW SEAT

AME775200106W01

Side-sliding Operation

- Pull the slide lever and slide the second-row seat inward or outward.

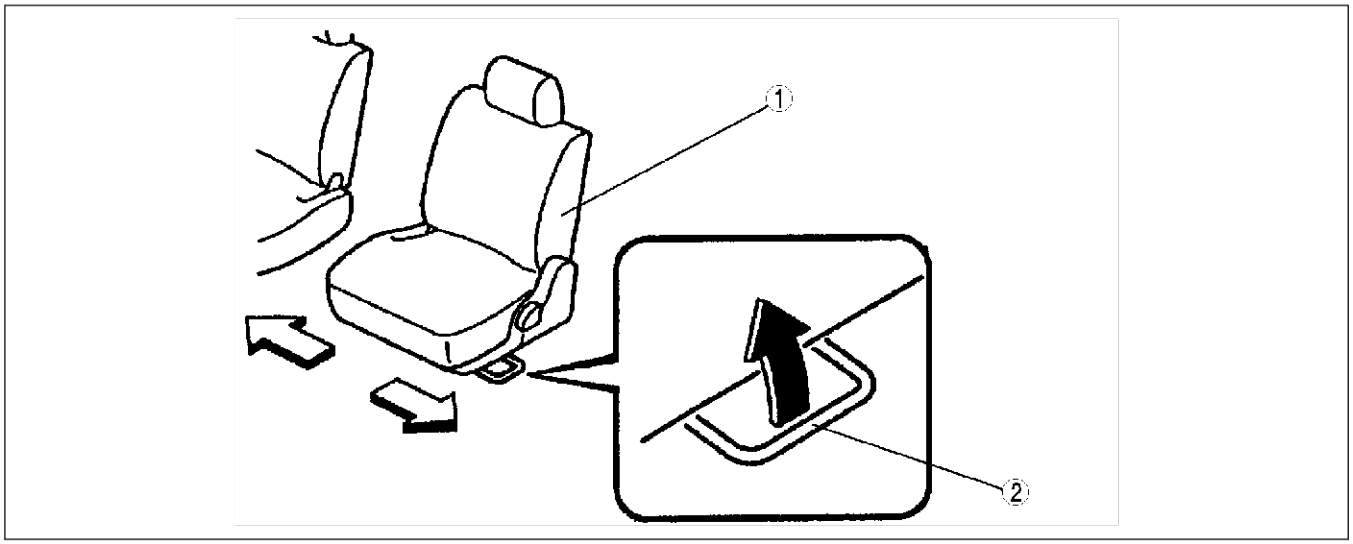

AME7752W004

1	Second-row seat (Left)

2	Slide lever

End Of Sie

THIRD-ROW SEAT

AME775200108W01

Stowing Third-row Seat Operation

1. Remove the headrests.
2. Pull strap A and fold the seat back forward.
3. Pull strap B while lifting the seat up and to the rear.

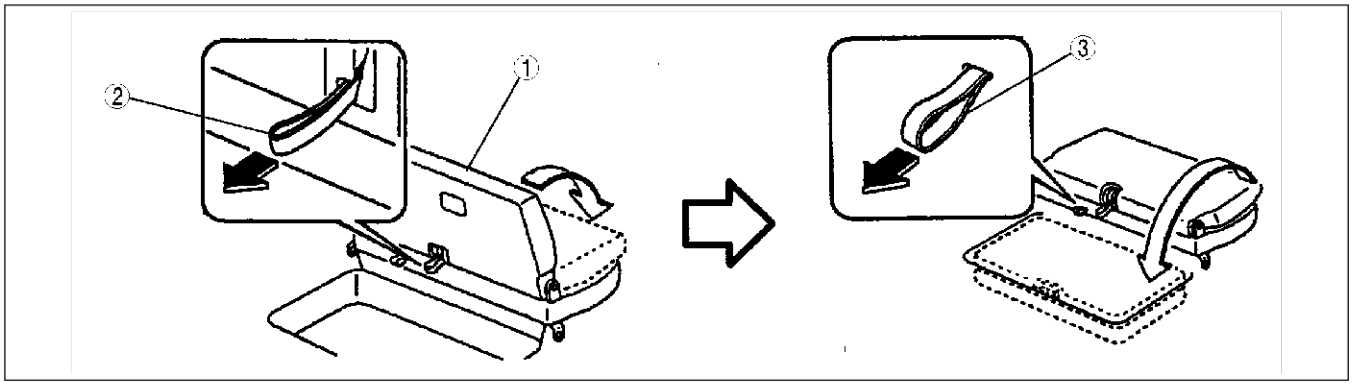

AME7752W005

1	Third-row seat
2	Strap A

3	Strap B

Rear View Seating Operation

1. Open the liftgate.
2. Remove the headrests.
3. Pull strap B while supporting the seat back with the other hand and carefully ease the seat back rearward and into the seat well.
4. Set the hook on the seat back support bar in the rear of the seat back.
5. Pull the seat back towards the front of the vehicle until the opposite end of the support bar hooks onto the anchor loop.

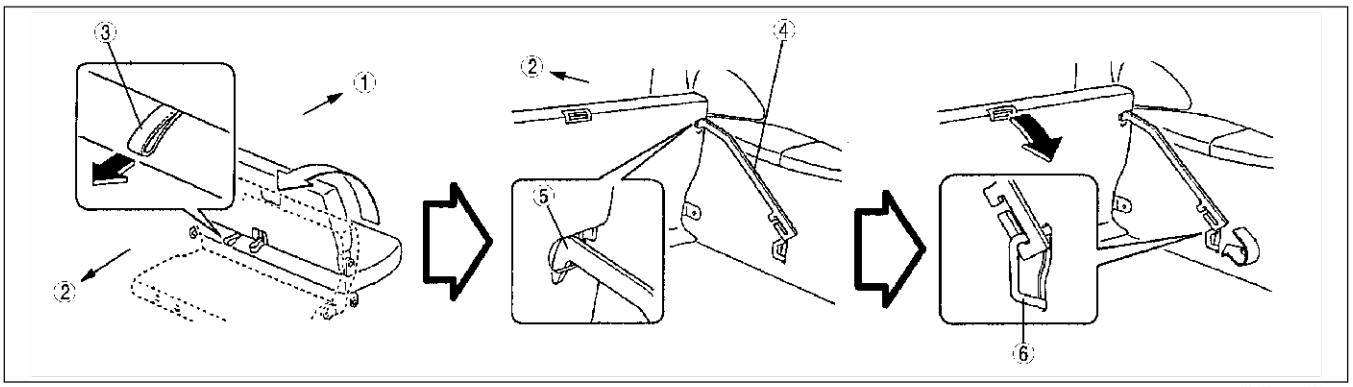

AME7752W006

1	Front
2	Rear
3	Strap B

4	Seat back support bar
5	Hook
6	Anchor loop

End Of Sie

S

OUTLINE

SUPPLEMENTAL SERVICE INFORMATION

AME770201086W03

- The following changes and/or additions have been made since publication of the Mazda MPV Workshop Manual (1666-1*-99F).

Bonnet
- Adjustment procedure has been modified.

Sliding door
- Disassembly/Assembly procedure has been modified.

Power window main switch
- Inspection procedure has been modified.
- Two-step down function operative/non-operative switching procedure has been added.
- Door glass position change procedure has been added.

Keyless unit
- Removal/Installation procedure has been modified.
- Disassembly/Assembly procedure has been modified.
- Inspection procedure has been modified.

Front bumper
- Removal/Installation procedure has been modified.
- Disassembly/Assembly procedure has been modified.

Spare tire carrier
- Removal/Installation procedure has been added.

Radiator grille
- Removal/Installation procedure has been modified.

Console lower cover
- Removal/Installation procedure has been modified.

Front console
- Disassembly/Assembly procedure has been modified.

Rear console
- Removal/Installation procedure has been modified.

Trunk side trim
- Removal/Installation procedure has been modified.

Front floor covering
- Removal/Installation procedure has been modified.

Rear floor covering
- Removal/Installation procedure has been modified.

Third-row buckle
- Removal/Installation procedure has been modified.

Front seat
- Disassembly/Assembly procedure has been modified.

Second-row seat
- Removal/Installation procedure has been added.
- Disassembly/Assembly procedure has been added.

Third-row seat
- Removal/Installation procedure has been added.
- Disassembly/Assembly procedure has been added.

Long slider and adapter
- Removal/Installation procedure has been added.

Seat warmer switch
- Inspection procedure has been modified.

Troubleshooting
- Power window system procedure has been modified.
- Keyless entry system procedure has been modified.

End Of Sie

BONNET

BONNET ADJUSTMENT

1. Measure the gap and height between the bonnet and the body.
   - If not as specified, adjust the gap and height. (See S–13 Gap Adjustment.) (See S–13 Height Adjustment.)

Clearance
a: 4.0—8.0 mm {0.16—0.31 in}
b: 4.0—8.0 mm {0.16—0.31 in}
c: Bumper should not pass bonnet.
d: 4.0—8.0 mm {0.16—0.31 in}
e: 3.0—5.0 mm {0.12—0.19 in}
f: -1.5—0.5 mm {-0.059—0.019 in}

AME771052310W01

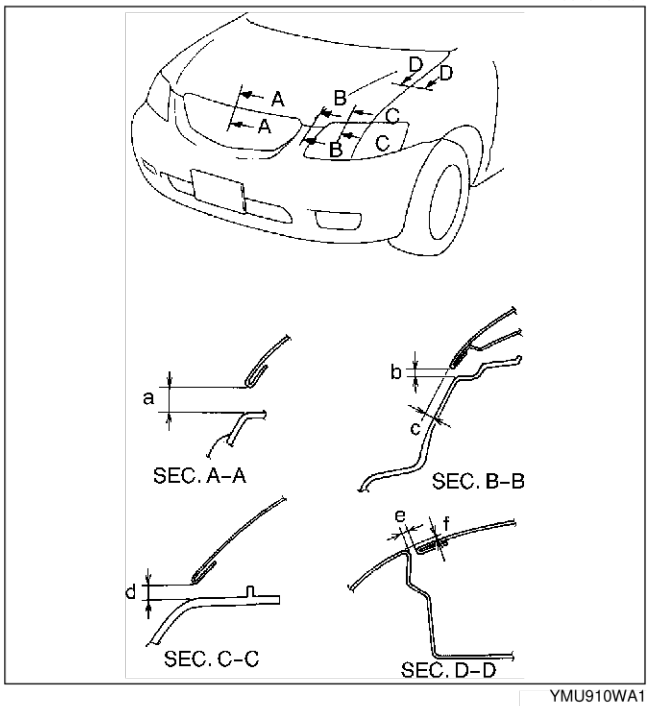

YMU910WA1

Gap Adjustment

1. Loosen the bonnet installation bolts and reposition the bonnet.
2. Tighten the bolts.

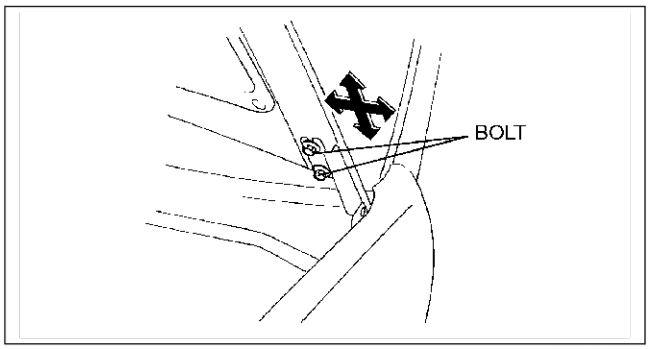

X3U910WA3

Height Adjustment

1. Turn the stop rubber to adjust the height of the bonnet.

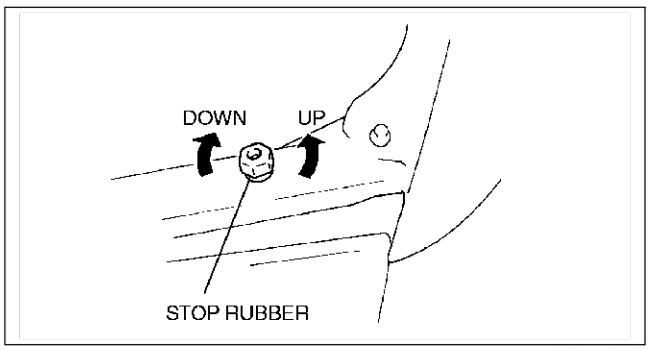

X3U910WA4

End Of Sie

S

DOOR

SLIDING DOOR DISASSEMBLY/ASSEMBLY

1. Operate the rear door glass so that the distance from the top of the rear door glass to the upper part of the rear beltline molding is **260 mm {10 in}**.
2. Disconnect the negative battery cable.
3. Remove the sliding door trim.
4. To remove the rear door glass, remove the rear beltline molding.
5. Disassemble in the order indicated in the table.
6. Assemble in the reverse order of disassembly.

AME771473002W01

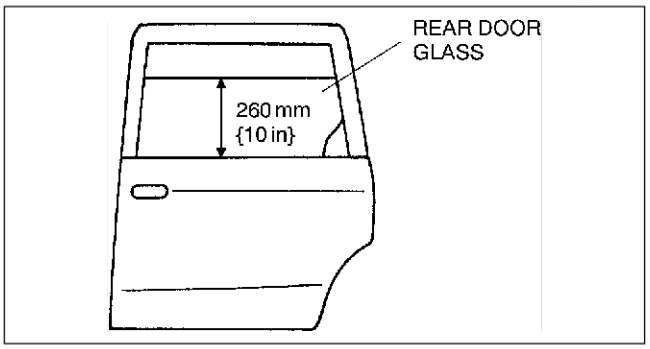

YMU911WAC

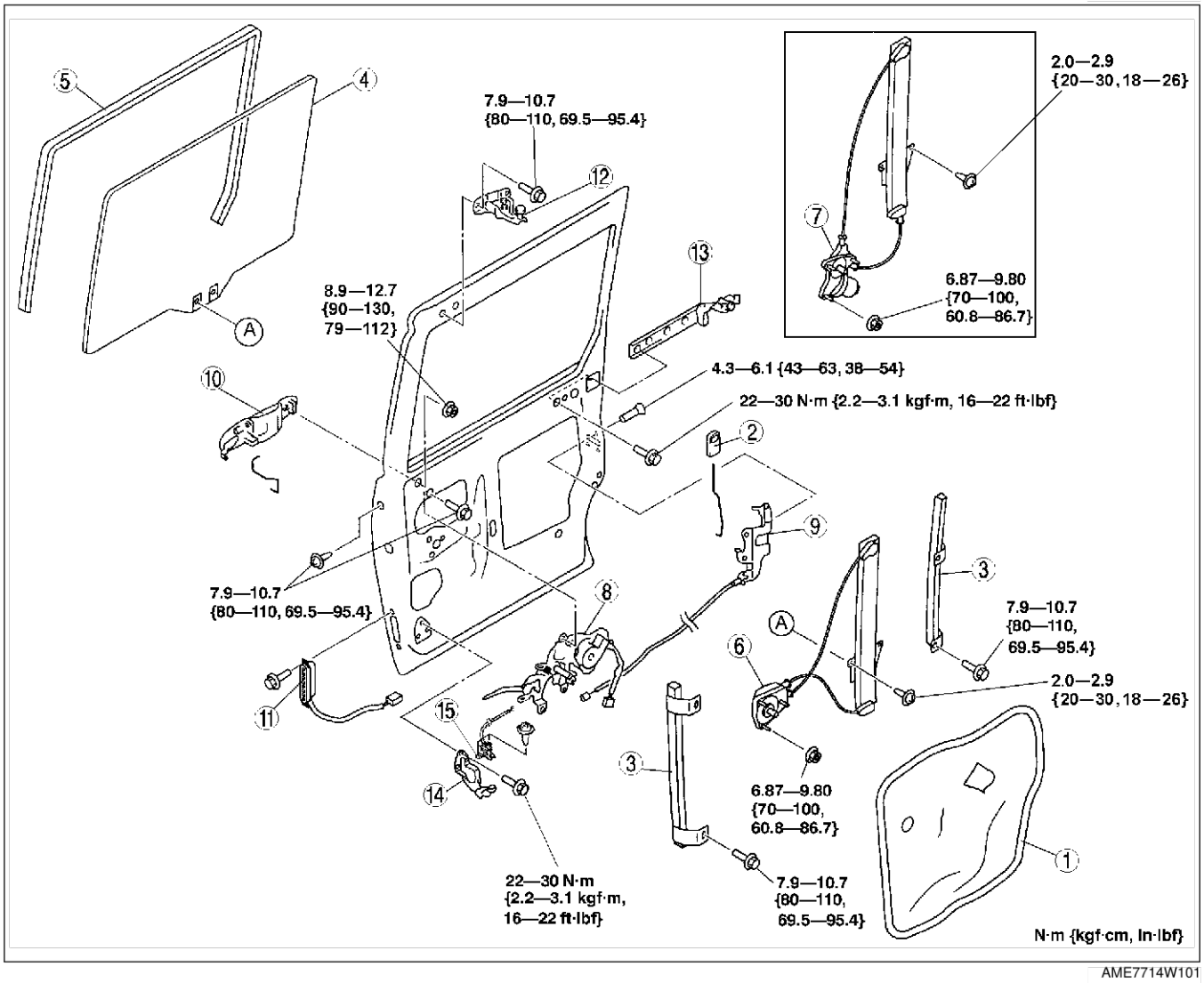

AME7714W101

1	Door screen
2	Door lock knob
3	Glass guide
4	Rear door glass (See S–15 Rear Door Glass Disassembly Note)
5	Glass run channel
6	Rear manual window regulator
7	Rear power window regulator

8	Remote controller
9	Sliding door lock
10	Outer handle
11	Sliding door circuit contact
12	Upper roller
13	Center roller
14	Lower roller
15	Open lock

Rear Door Glass Disassembly Note

1. Remove the rear beltline molding.
2. Remove the rear door glass installation bolts.
3. To remove the rear door glass from the glass run channel, lower the rear door glass.
4. Set the rear door glass in the notches of the sliding door, and pull it out while tilting it forward.

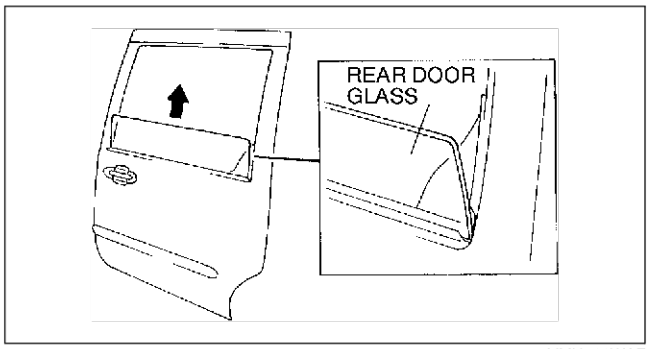

YMU911WAE

End Of Sie

POWER WINDOW SYSTEM

POWER WINDOW MAIN SWITCH INSPECTION

AME771666350W01

Australian, European (L.H.D., U.K.) specs.
Driver's side

1. Remove the power window main switch panel.
2. Connect the power window main switch connector.
3. Measure the voltage at the power window main switch terminals as indicated below.
4. Disconnect the power window main switch connector before inspecting for continuity at terminals 1H and 2C.
   - If the parts and wiring harnesses are okay but the system still does not work properly, replace the power window main switch.
   - If not as specified, inspect the parts listed under "Action."

Terminal voltage table (Reference)

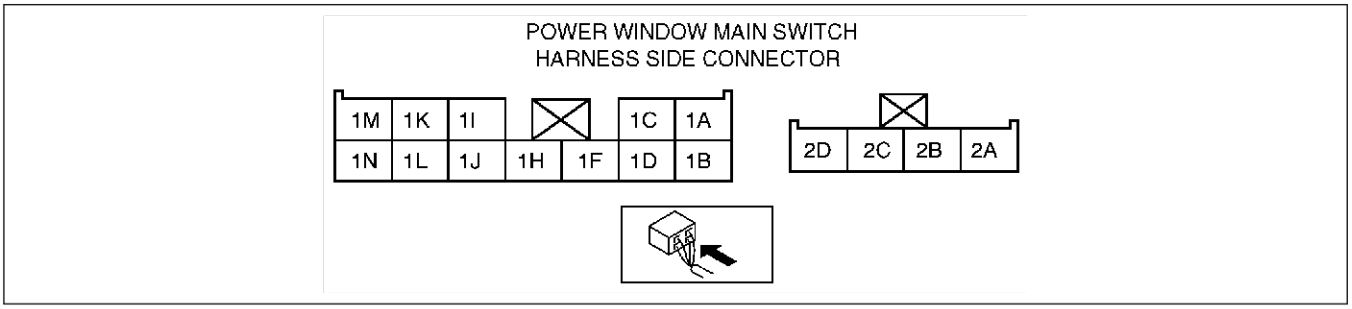

ZPA7716W011

Terminal	Signal	Connected to	Test condition	Voltage (V)/ Continuity	Action
1A (1M)	Close output	Power window motor	Door glass is open	Below 1.0	• Inspect power window motor • Inspect related harness
			Door glass is closed	B+	
1C (1K)	Open output	Power window motor	Door glass is open	B+	• Inspect power window motor • Inspect related harness
			Door glass is closed	Below 1.0	
1F	IG1	P.WIND 30 A fuse	Ignition switch is at ON position	B+	• Inspect P.WIND 30 A fuse • Inspect related harness
			Ignition switch is at LOCK position	Below 1.0	
1H	Ground	GND	Inspect for continuity to ground under any condition	Yes	-
1I	Power supply	ACC.DELAY 30 A fuse	Under any condition	B+	• Inspect ACC.DELAY 30 A fuse • Inspect related harness
1N	Door switch	Door switch	Any door is open (door switch is on): inspect for continuity to ground	Yes	• Inspect door switch • Inspect related harness
			All doors are closed (door switch is off): inspect for continuity to ground	No	
2B	Limit switch on/off	Power window motor	Door glass is opened fully (limit switch is on)	0	• Inspect power window motor • Inspect related harness
			Door glass is closed fully (limit switch is off)	5	
2C	Ground	Power window motor	Inspect for continuity to ground under any condition	Yes	-
2D	Pulse	Power window motor	Door glass is in motion	Alternates between 0 and 5	• Inspect power window motor • Inspect related harness
			Door glass is not in motion	0 or 5	

( ) : R.H.D.

Except driver's side

1. Remove the power window main switch.
2. Turn the power-cut switch to UNLOCK.
3. Inspect for continuity between the power window main switch terminals using an ohmmeter.
   - If not as specified, replace the power window main switch.

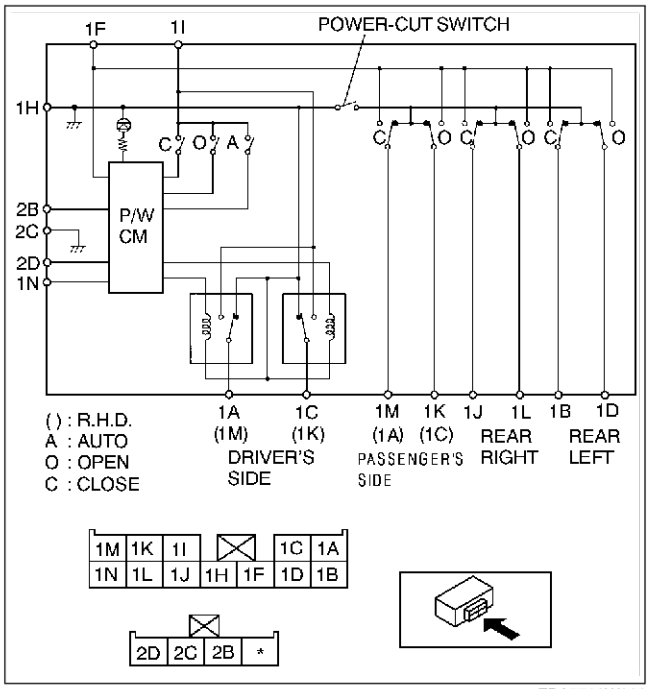

ZPA7716W002

Passenger's side

○—○ : Continuity

Switch position	Terminal			
	1F	1H	1M (1A)	1K (1C)
CLOSE	○		○	
		○		○
OFF		○	○	○
OPEN	○			○
		○	○	

( ): R.H.D.

Rear right

○—○ : Continuity

Switch position	Terminal			
	1F	1H	1J	1L
CLOSE	○		○	
		○		○
OFF		○	○	○
OPEN	○			○
		○	○	

Rear left

○—○ : Continuity

Switch position	Terminal			
	1F	1H	1B	1D
CLOSE	○		○	
		○		○
OFF		○	○	○
OPEN	○			○
		○	○	

Power-cut switch

○—○ : Continuity

Switch position	Terminal								
	1H	1A (1M)	1C (1K)	1M (1A)	1K (1C)	1J	1L	1B	1D
UNLOCK	○	○	○	○	○	○	○	○	○
LOCK	○	○	○		○	○	○	○	○

( ): R.H.D.

AME7716W091

End Of Ste

S

TWO-STEP DOWN FUNCTION OPERATIVE/NON-OPERATIVE SWITCHING PROCEDURE

AME771666350W02

Note

- By following the procedure below, the two-step down function is switched to non-operative when it is operative, and to operative when it is non-operative.

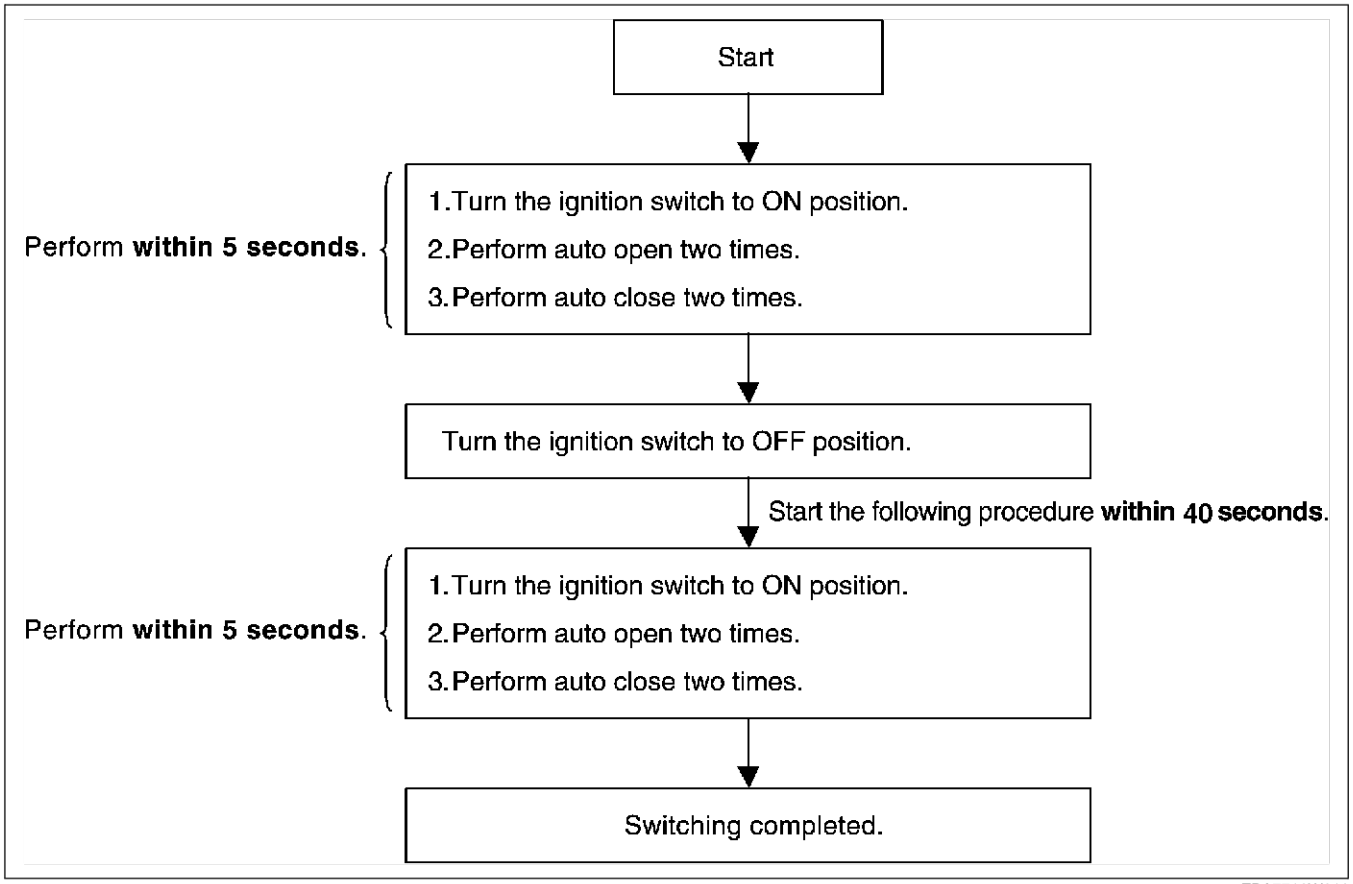

ZPA7716W010

End Of Sie

DOOR GLASS POSITION CHANGE PROCEDURE

AME771666350W03

Note

- After performing the following procedure, verify that the two-step down function operates normally and the door glass position has changed. If the two-step down function does not operate or the door glass position has not changed, the procedure was not performed properly. Repeat the procedure from the beginning.

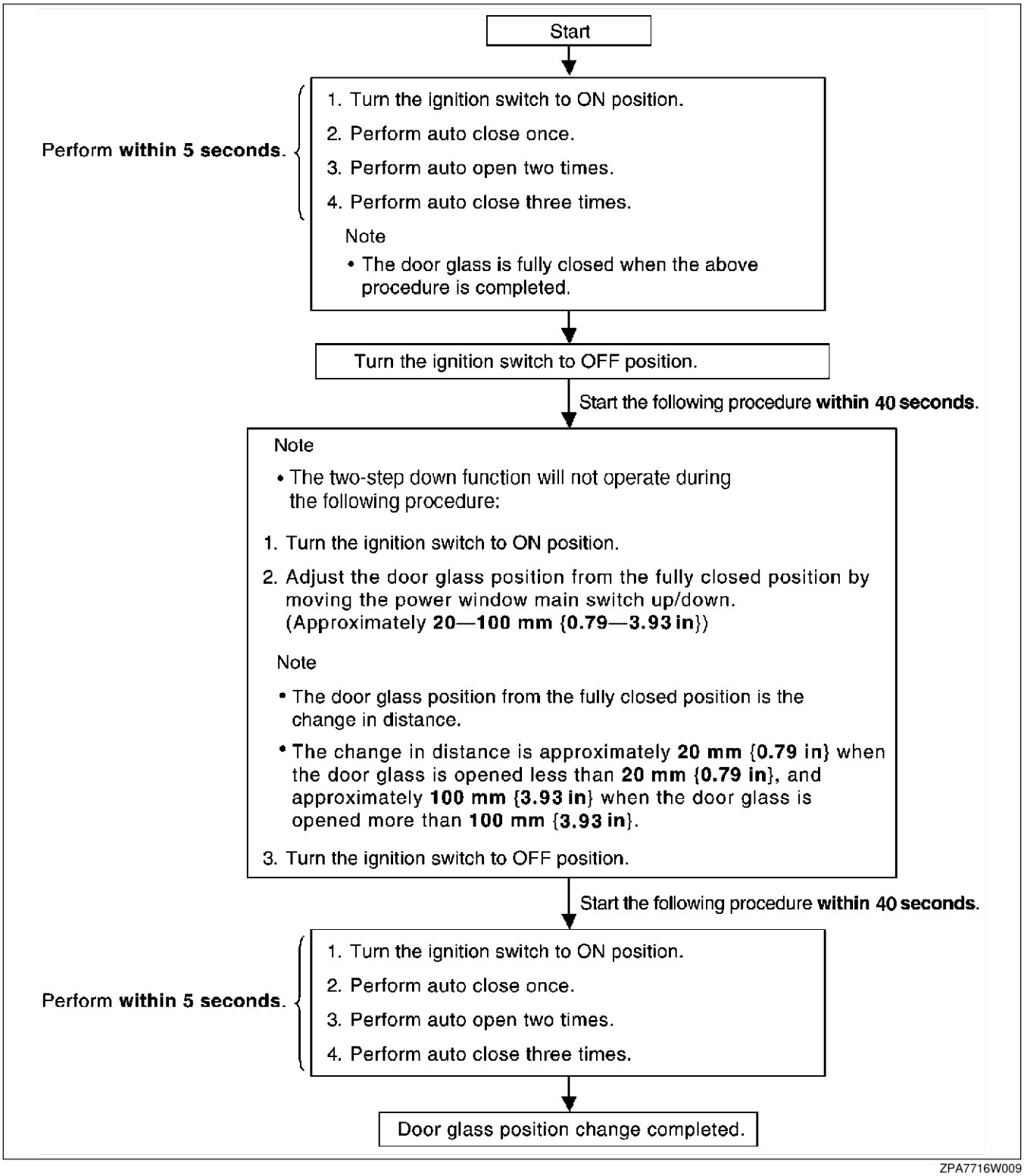

ZPA7716W009

End Of Sie

S

POWER DOOR LOCK SYSTEM

KEYLESS UNIT REMOVAL/INSTALLATION

AME771801097W01

L.H.D.

1. Disconnect the negative battery cable.
2. Remove in the order indicated in the table.

1	Keyless unit connector
2	Nut
3	Keyless unit

3. Install in the reverse order of removal.

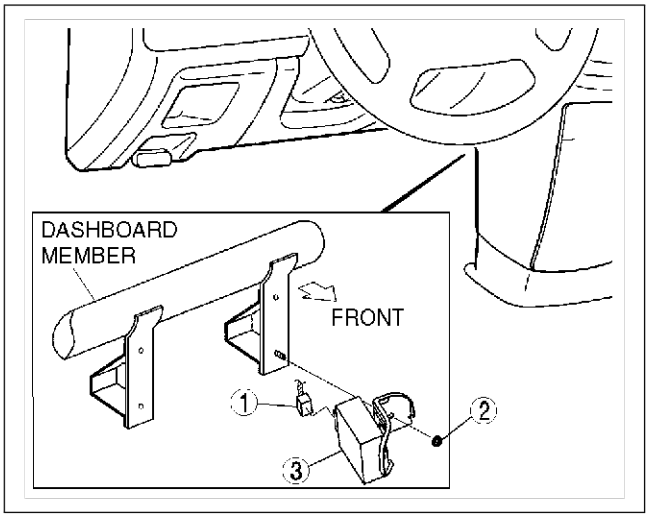

AMU0914W004

R.H.D.

1. Disconnect the negative battery cable.
2. Remove the glove compartment.
3. Disconnect the short cord and vehicle side harness connector.
4. Remove the nut, then remove the keyless unit.
5. Install in the reverse order of removal.

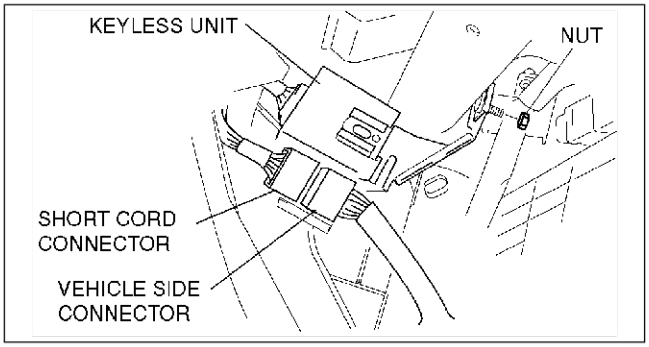

AME7718W901

End Of Sie

KEYLESS UNIT DISASSEMBLY/ASSEMBLY

AME771801097W02

1. Remove the short cord from the bracket. (R.H.D. only)
2. Remove the screw.

Note

- The screw which fixes the keyless unit bracket is for a body ground connection. Be sure to secure the screw when installing.

3. Slide the bracket the arrow and remove it.

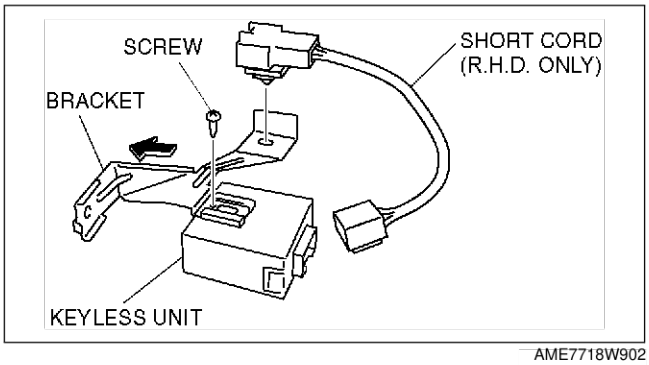

AME7718W902

End Of Sie

KEYLESS UNIT INSPECTION

AME771801097W03

1. Measure the voltage at the keyless unit terminals (other than terminal L) as indicated below.
   - If not as specified, inspect the parts listed under “Action.”
2. Disconnect the negative battery cable.
3. Disconnect the keyless unit connector (L.H.D.) /short cord connector (R.H.D.) and inspect for continuity between terminal L and the bracket.
4. Inspect for continuity at terminal L as indicated below.
5. If the parts and wiring harnesses are okay but the system still does not work properly, perform the troubleshooting.

Terminal Voltage Table (Reference)
L.H.D.

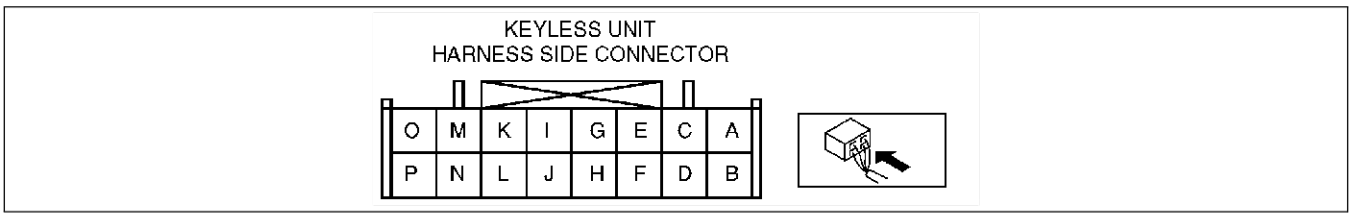

ZPA7718W001

Terminal	Signal	Connected to	Test condition	Voltage (V)/ Continuity	Action
A	IG1	METER 10 A fuse	Ignition switch is at ON position	B+	• Inspect METER 10 A fuse • Inspect related harness
			Ignition switch is at LOCK or ACC position	Below 1.0	
B	Power supply	ROOM 15 A fuse	Under any condition	B+	• Inspect ROOM 15 A fuse • Inspect related harness
C	• Door open/ closed • Liftgate open/ closed	Door switch	Any door or liftgate is open (any door switch or cargo compartment light switch is on)	Below 1.0	• Inspect door switches • Inspect cargo compartment light switch • Inspect related harness
			All door and liftgate are closed (door switches and cargo compartment light switch are off)	B+	
D	-	-	-	-	-
E	-	-	-	-	-
F	-	-	-	-	-
G	-	-	-	-	-
H	Hazard	Flasher unit	Transmitter LOCK button is pressed	B+→Below 1.0→B+	• Inspect flasher unit • Inspect related harness
			Transmitter UNLOCK button is pressed	B+→Below 1.0→B+→Below 1.0→B+	
			No transmitter buttons are pressed	B+	
I	-	-	-	-	-
J	-	-	-	-	-
K	-	-	-	-	-
L	Ground	GND	Inspect for continuity to ground under any condition	Yes	-
M	-	-	-	-	-
N	-	-	-	-	-
O	Lock/unlock output	Door lock timer unit	Transmitter LOCK button is pressed	B+→6→B+	• Inspect door lock timer unit • Inspect related harness
				5→2.5→5*	
			Transmitter UNLOCK button is pressed	B+→Below 1.0→B+	
				5→Below 1.0→5*	
			No transmitter buttons are pressed	B+	
				5*	
P	-	-	-	-	-

* : Vehicles with double locking system or theft-deterrent system

S

R.H.D.

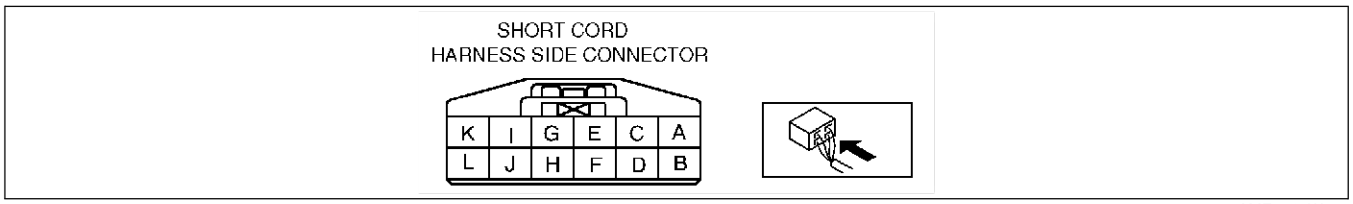

AME7718W003

Terminal	Signal	Connected to	Test condition	Voltage (V)/ Continuity	Action
A	IG1	METER 10 A fuse	Ignition switch is at ON position	B+	• Inspect METER 10 A fuse • Inspect related harness
			Ignition switch is at LOCK or ACC position	Below 1.0	
B	Power supply	ROOM 15 A fuse	Under any condition	B+	• Inspect ROOM 15 A fuse • Inspect related harness
C	• Door open/ closed • Liftgate open/ closed	Door switch	Any door or liftgate is open (any door switch or cargo compartment light switch is on)	Below 1.0	• Inspect door switches • Inspect cargo compartment light switch • Inspect related harness
			All door and liftgate are closed (door switches and cargo compartment light switch are off)	B+	
D	Hazard	Flasher unit	Transmitter LOCK button is pressed	B+→Below 1.0→B+*1	• Inspect flasher unit • Inspect theft-deterrent control module • Inspect related harness
			Transmitter UNLOCK button is pressed	B+→Below 1.0→B+→Below 1.0→B+*1	
			No transmitter buttons are pressed	B+*1	
E*2	Horn	Horn relay	Transmitter LOCK button is pressed twice **within 5 seconds**	B+→Below 1.0→B+	• Inspect horn relay • Inspect related harness
			No transmitter buttons are pressed	B+	
F	Lock/unlock output	Door lock timer unit	Transmitter LOCK button is pressed	B+→6→B+	• Inspect door lock timer unit • Inspect related harness
				5→2.5→5*3	
			Transmitter UNLOCK button is pressed	B+→Below 1.0→B+	
				5→Below 1.0→5*3	
			No transmitter buttons are pressed	B+	
				5*3	
G	-	-	-	-	-
H	-	-	-	-	-
I*4	Theft-deterrent alarm control	Theft-deterrent control module	Under any condition (with theft-deterrent control module)	5	• Inspect theft-deterrent control module • Inspect related harness
			Under any condition (without theft-deterrent control module)	0	
K	-	-	-	-	-
L	Ground	GND	Inspect for continuity to ground under any condition	Yes	-

*1 : Except vehicles with theft-deterrent system
*2 : Australian specs. only
*3 : Vehicles with double locking system or theft-deterrent system
*4 : Vehicles with theft-deterrent system

End Of Sie

BUMPER

FRONT BUMPER REMOVAL/INSTALLATION

AME772650031W01

1. Disconnect the negative battery cable.
2. Remove the radiator grille.
3. Remove the front combination light. (See T–30 HEADLIGHT REMOVAL/INSTALLATION.)
4. Disconnect the front fog light connector.
5. Remove in the order indicated in the table.
6. Install in the reverse order of removal.

1	Bolt A
2	Fastener
3	Screw
4	Bolt B
5	Front bumper (See S–23 Front Bumper Removal Note.)

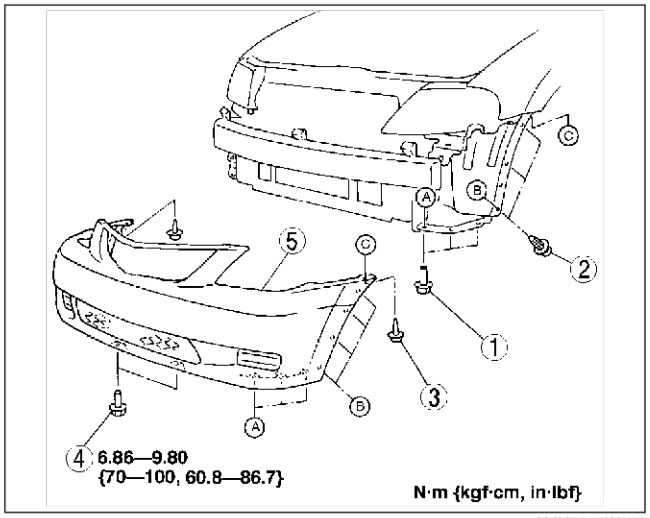

AMU0910W003

Front Bumper Removal Note

1. Pull the front bumper forward to disengage the front bumper from the bumper brackets.

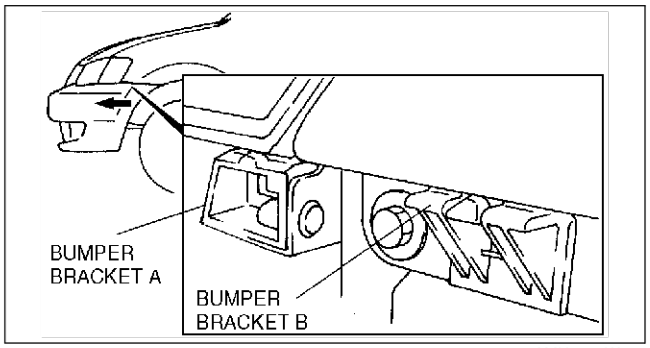

AMU0910W004

End Of Sie

FRONT BUMPER DISASSEMBLY/ASSEMBLY

AME772650031W02

1. Disassemble in the order indicated in the table.

1	Front fog light hole cover
2	Front bumper fascia

2. Assemble in the reverse order of disassembly.

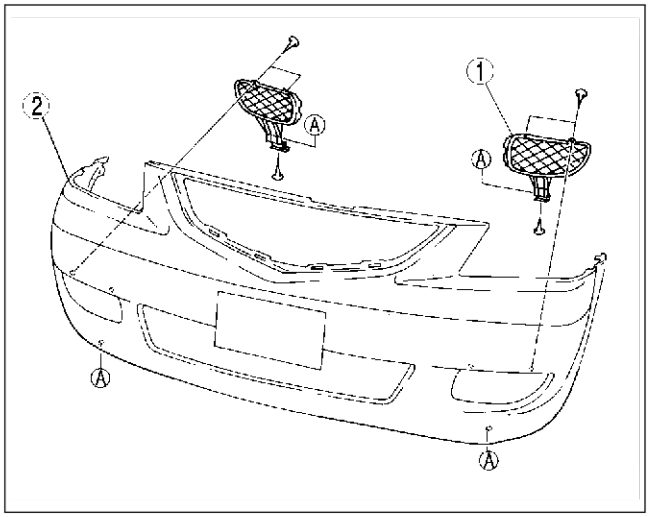

AMU0910W001

End Of Sie

S

EXTERIOR ATTACHMENT

RADIATOR GRILLE REMOVAL/INSTALLATION

1. Remove the fasteners and screws.
2. Pull the radiator grille forward, then disengage clips A from the front bumper.
3. Install in the reverse order of removal.

AME772850710W01

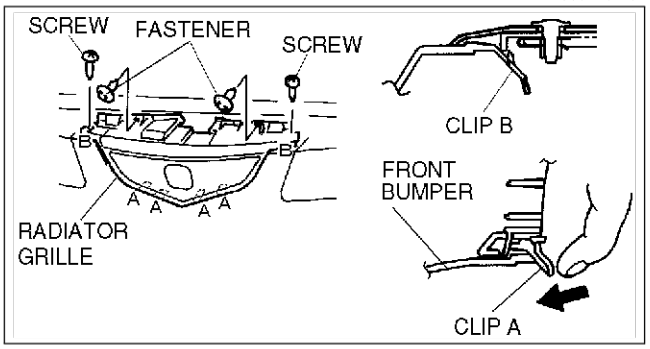

AMU0916W001

End Of Sie

SPARE TIRE CARRIER REMOVAL/INSTALLATION

1. Remove in the order indicated in the table.

1	Spare tire carrier insulator
2	Spare tire carrier

2. Install in the reverse order of removal.

AME772800115W01

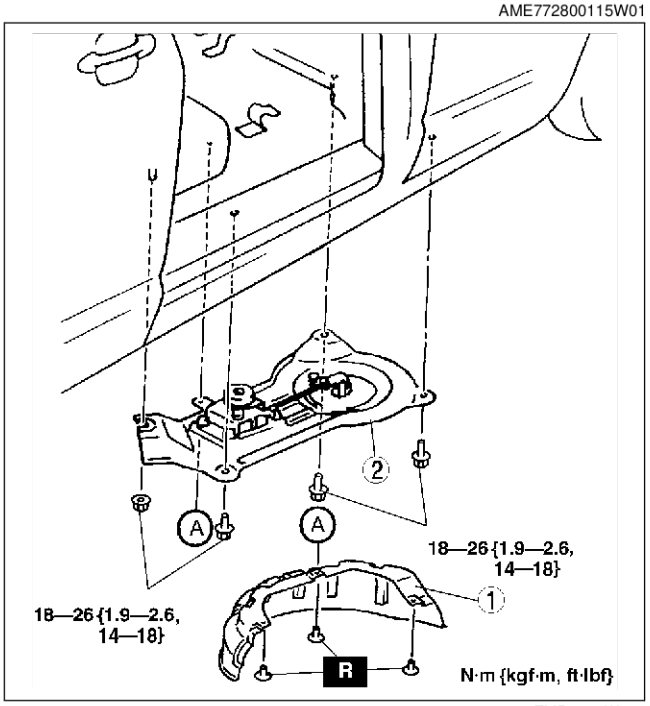

ZMR7728W001

End Of Sie

DASHBOARD AND CONSOLE

CONSOLE LOWER COVER REMOVAL/INSTALLATION

AME774264393W01

1. Remove the rear console. (with rear console)
2. Pull the console lower cover toward you, and remove the console lower cover.
3. Install in the reverse order of removal.

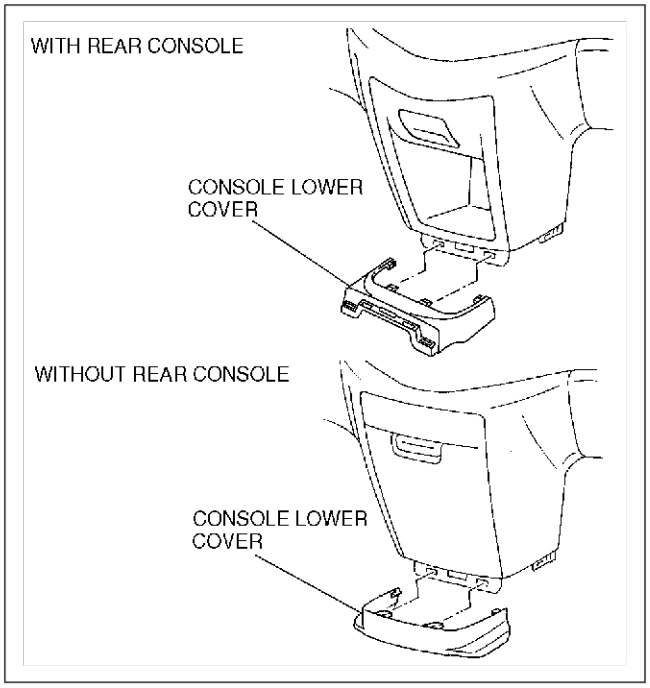

AME7742W001

End Of Ste

FRONT CONSOLE DISASSEMBLY/ASSEMBLY

AME774264270W01

1. Disassemble in the order indicated in the table.

1	Knob
2	Cup holder
3	Box
4	Console

2. Assemble in the reverse order of disassembly.

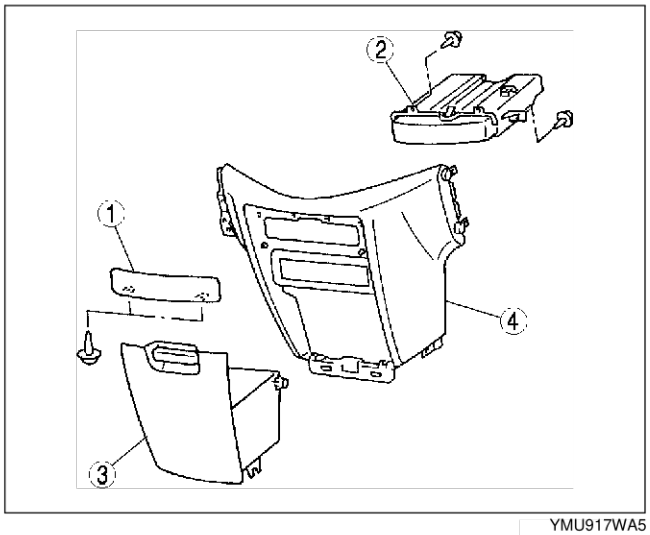

YMU917WA5

End Of Ste

S

REAR CONSOLE REMOVAL/INSTALLATION

AME774264270W02

1. For manual transaxle vehicle, remove the shift lever knob.
2. Remove in the order indicated in the table.

1	Console cover
2	Nut
3	Fastener
4	Rear console

3. Install in the reverse order of removal.

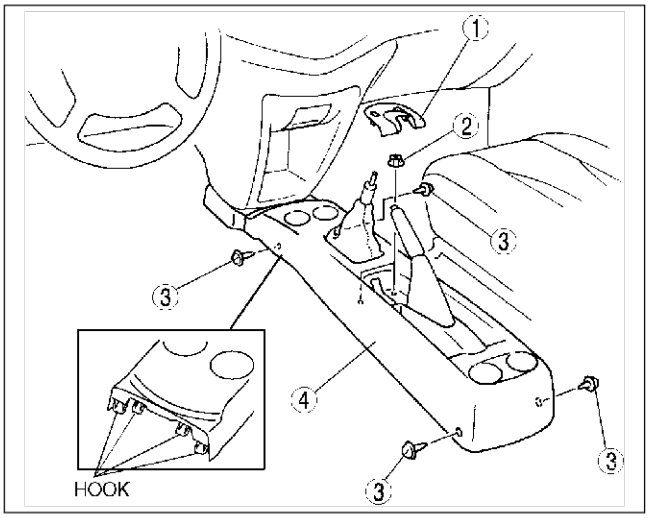

AME7742W002

End Of Sie

FLOOR COVERING

FRONT FLOOR COVERING REMOVAL/INSTALLATION

AME774868670W01

1. Disconnect the negative battery cable.
2. Remove the front seats.
3. Remove the second-row seats. (See S–31 SECOND-ROW SEAT REMOVAL/INSTALLATION.)
4. Remove the front scuff plate.
5. Remove the rear scuff plate.
6. Remove the console lower cover.
7. Remove the front side trim.
8. Remove the B-pillar lower trim.
9. Remove the lower anchor of the front seat belt installation bolt.
10. Remove the rear side trim.
11. Remove the long slider cover and adapter cover. (See S–35 LONG SLIDER AND ADAPTER REMOVAL/INSTALLATION.)
12. Remove the child restraint seat anchor cover.
13. Remove the rear heater grilles.
14. Remove the parking brake cover.
15. Remove the rear heat duct. (For second-row seat)
16. Remove the fasteners, and remove the floor covering.
17. Remove the floor covering from the vehicle through the passenger-side front door.
18. Install in the reverse order of removal.

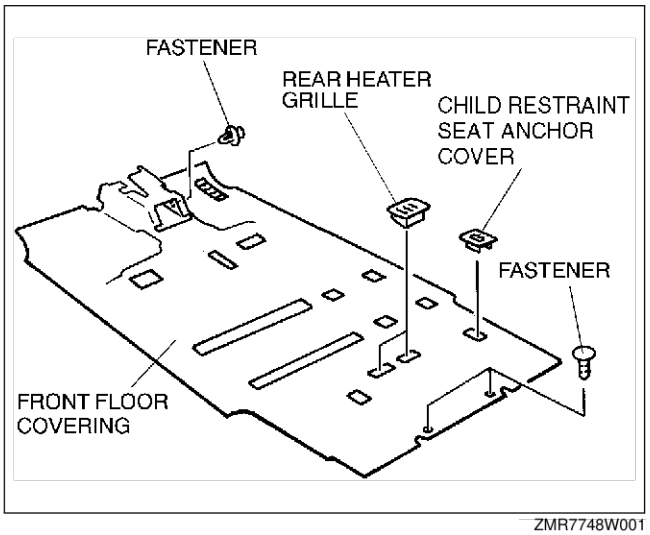

ZMR7748W001

End Of Sie

REAR FLOOR COVERING REMOVAL/INSTALLATION

AME774868691W01

1. Remove the rear side trim.
2. Lift the third-row seat back and lower it into cargo well.
3. Remove the fastener A.
4. Return the third-row seat to its original position.

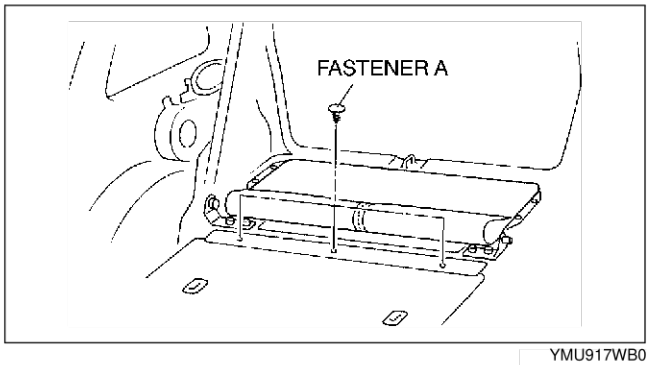

YMU917WB0

5. Remove the lower anchor installation bolt of the center third-row seat belt.

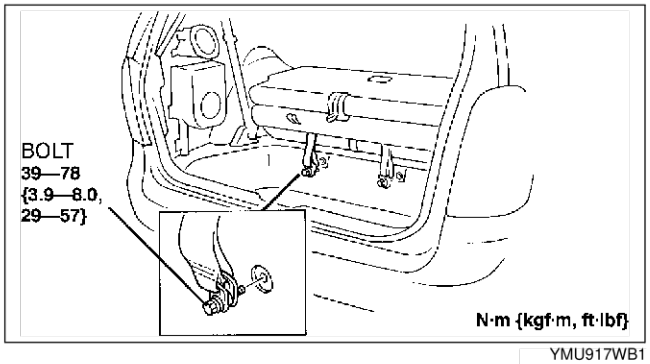

YMU917WB1

6. Remove the fasteners B.
7. Remove the ring of the cargo net, and remove the rear floor covering.
8. Install in the reverse order of removal.

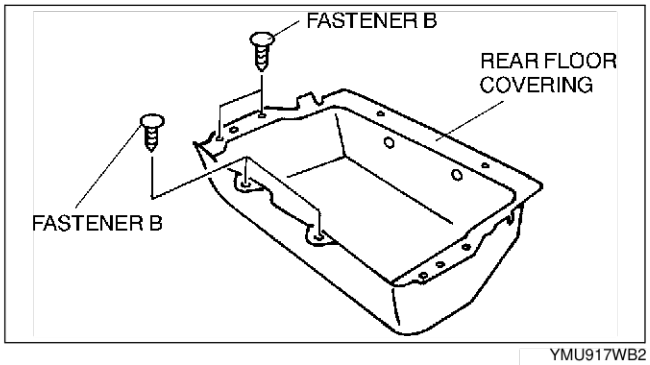

YMU917WB2

End Of Sie

S

TRIM

TRUNK SIDE TRIM REMOVAL/INSTALLATION

AME774468860W01

1. Disconnect the negative battery cable.
2. Turn the weatherstrip over. (Liftgate side and sliding door side).
3. Remove the mat set end plate.
4. Remove the rear scuff plate.
5. Pull the cup holder upward, then disengage clips A and pin B from the trunk side trim, and remove the cup holder (RH only).
6. Remove the bolts and fastener.
7. Pull the trunk side trim toward you, then disengage clips C, pin D, tabs E and F from the body.
8. Disconnect the rear climate control unit connectors and rear tweeter connectors. (Vehicles with rear tweeter)
9. Remove the trunk side trim.

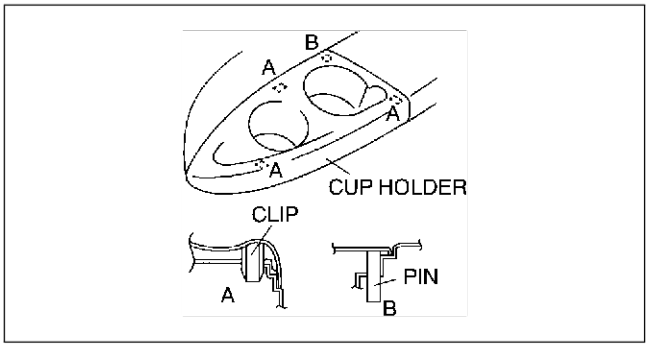

YMU917WB3

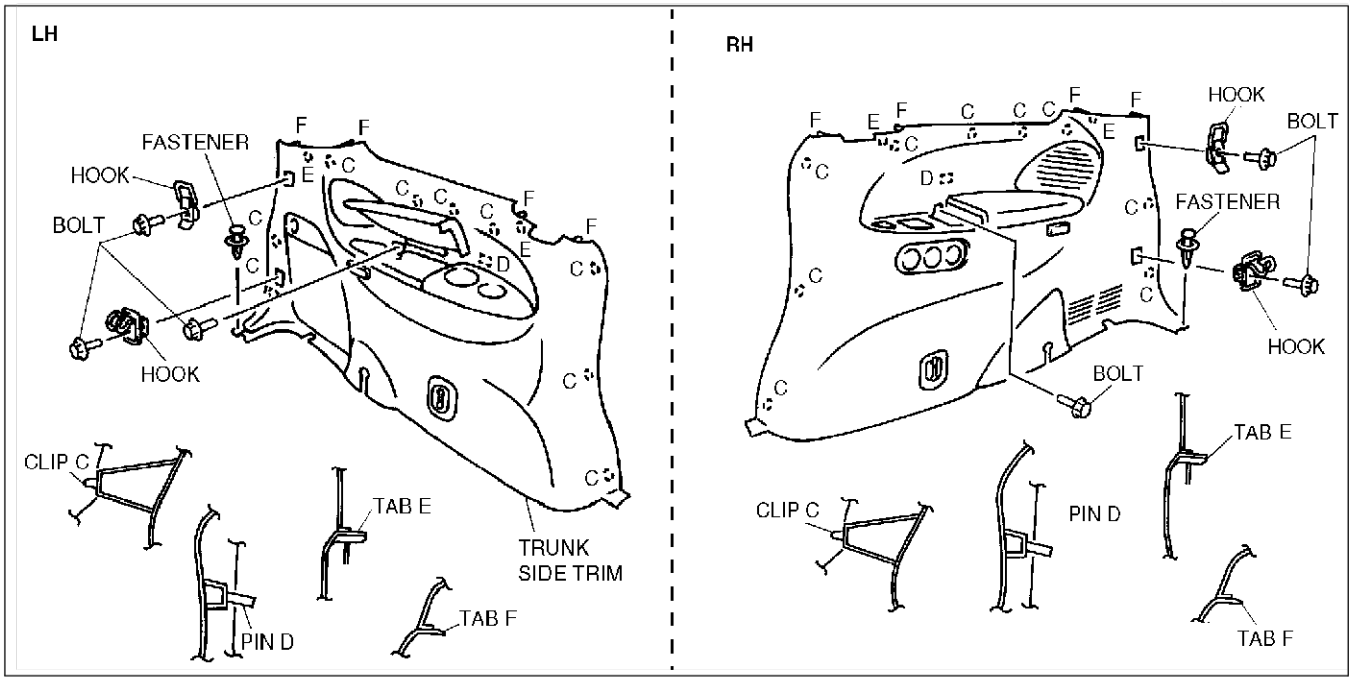

AME7744W001

10. Install in the reverse order of removal.

End Of Sie

SEAT BELT

THIRD-ROW BUCKLE REMOVAL/INSTALLATION

AME775057820W01

1. Remove the bolts, and then remove the third-row buckle.
2. Install in the reverse order of removal.

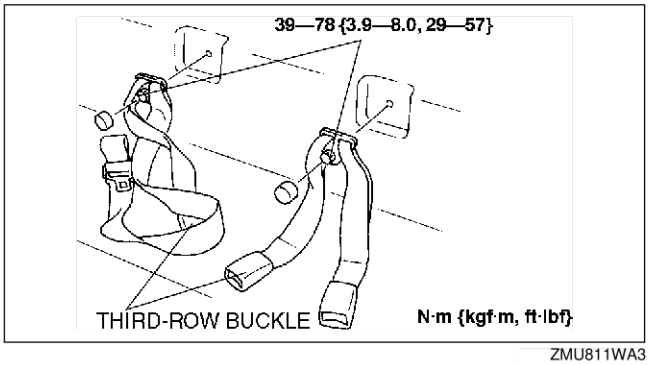

ZMU811WA3

SEAT

FRONT SEAT DISASSEMBLY/ASSEMBLY

AME775257100W03

Driver's Seat

Warning

- **Handling the front seat (side air bag) improperly can accidentally deploy the side air bag, which may seriously injure you. Read AIR BAG SYSTEM SERVICE WARNINGS before handling the front seat.**

1. Remove the driver-side side air bag module.
2. Disassemble in the order indicated in the table.
3. Assemble in the reverse order of disassembly.

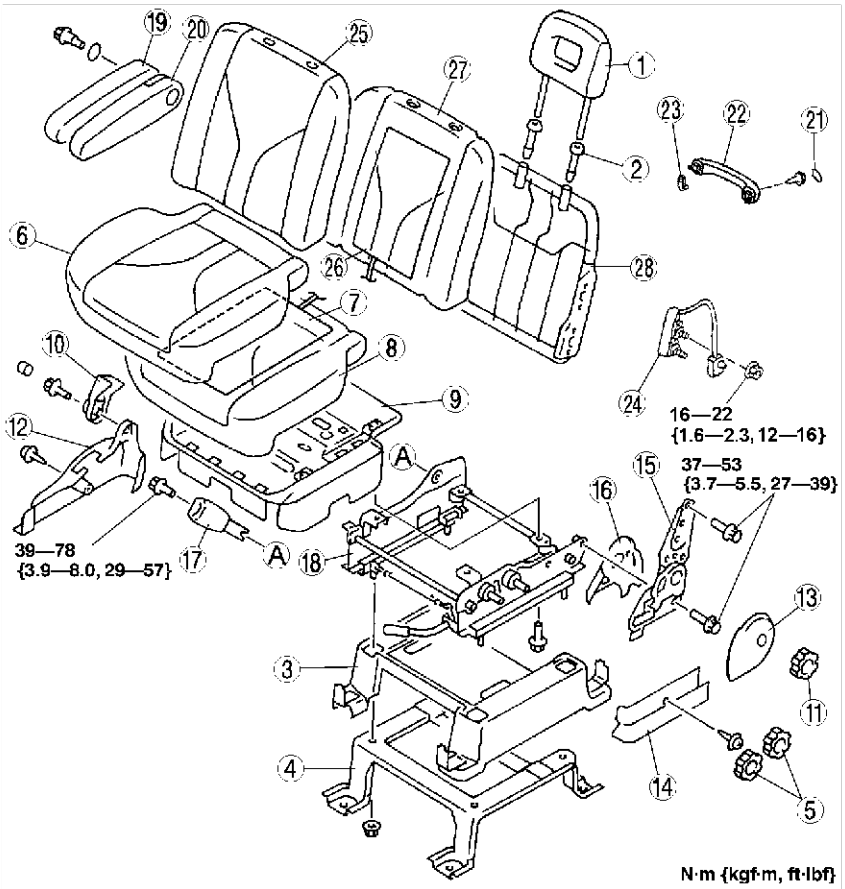

AME7752W001

1	Headrest
2	Pole guide
3	Seat under bracket cover
4	Seat under bracket
5	Tilt dial
6	Seat cushion trim
7	Seat warmer unit (European (L.H.D.) specs. only)
8	Seat cushion pad
9	Seat cushion frame
10	Hinge cover
11	Recliner dial
12	Side cover No.1
13	Side cover No.2
14	Side cover No.3

15	Recliner knuckle
16	Reverse cover
17	Front buckle
18	Slide adjuster
19	Armrest trim
20	Armrest frame
21	Cap
22	Assist grip
23	Hook
24	Side air bag module
25	Seat back trim
26	Seat warmer unit (European (L.H.D.) specs. only)
27	Seat back pad
28	Seat back frame

S

Passenger's Seat

Warning

- **Handling the front seat (side air bag) improperly can accidentally deploy the side air bag, which may seriously injure you. Read AIR BAG SYSTEM SERVICE WARNINGS before handling the front seat.**
- **Do not disassemble the seat cushion. Doing so will necessitate reassembly which may damage or press the occupancy sensor. This will cause the misoperation of the air bag system, which may seriously injure you.**

1. Remove the passenger-side side air bag module.
2. Disassemble in the order indicated in the table.
3. Assemble in the reverse order of disassembly..

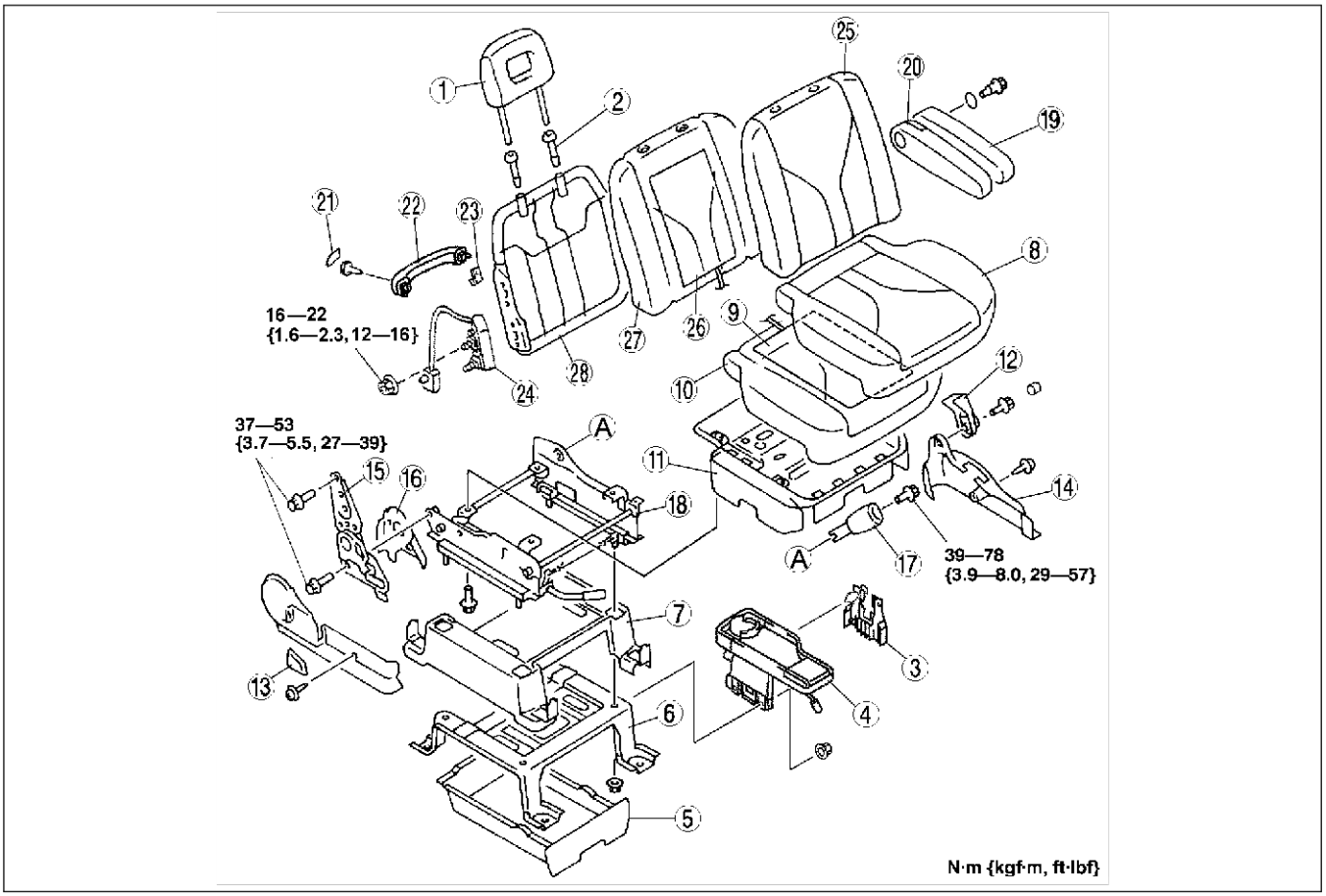

AME7752W002

1	Headrest
2	Pole guide
3	Side table cover
4	Side table
5	Seat under tray
6	Seat under bracket cover
7	Seat under bracket
8	Seat cushion trim
9	Seat warmer unit (European (L.H.D.) specs. only)
10	Seat cushion pad
11	Seat cushion frame
12	Hinge cover
13	Recliner lever
14	Side cover

15	Recliner knuckle
16	Reverse cover
17	Front buckle
18	Slide adjuster
19	Armrest trim
20	Armrest frame
21	Cap
22	Assist grip
23	Hook
24	Side air bag module
25	Seat back trim
26	Seat warmer unit (European (L.H.D.) specs. only)
27	Seat back pad
28	Seat back frame

End Of Sie

SECOND-ROW SEAT REMOVAL/INSTALLATION

AME775200106W02

General (R.H.D.) Specs.

1. Slide the seat to the rearmost position.
2. Remove the headrest.
3. Buckle insert seat cushion hole.
4. Pull the recliner lever and lower the seat back forward.
5. Lift and hold the lever and lift the entire seat up and forward.
6. Remove the long slider cover. (Left side seat only)

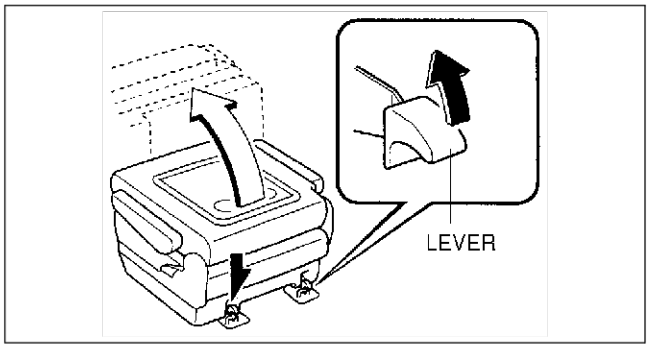

ZMR7752W103

7. Remove the nuts
8. Remove the second-row seat.
9. Install in the reverse order of removal.

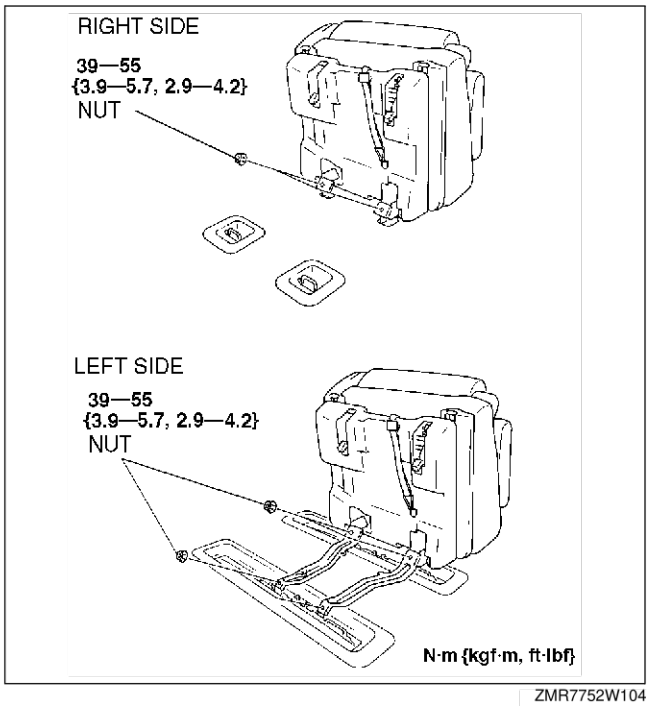

ZMR7752W104

S

SECOND-ROW SEAT REMOVAL

AMU09135720XW01

European (L.H.D.) Specs.

1. Place the buckle in the pocket in the cushion.
2. Slide the seat to the rearmost position.
3. Pull the recliner lever and lower the seat back forward.
4. Lift and hold the seat-anchor bar and lift the entire seat up and forward.

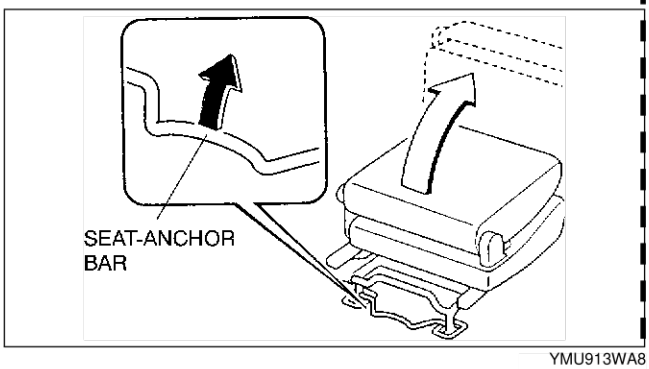

YMU913WA8

5. Remove the second-row seat.

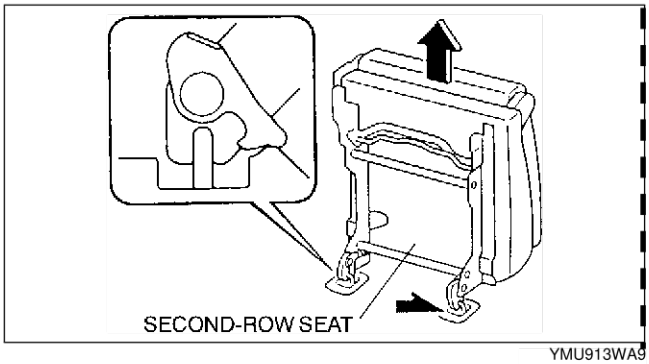

YMU913WA9

End Of Sub

SECOND-ROW SEAT INSTALLATION

AMU09135720XW02

European (L.H.D.) Specs.

1. Set the seat's strikers on the front floor anchors.

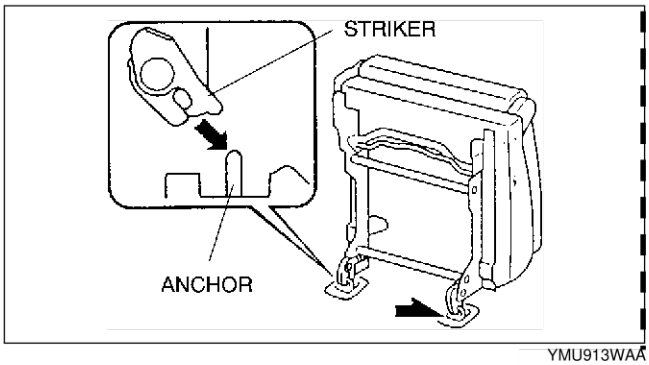

YMU913WAA

2. Supporting the seat with your hands, slowly lower the seat back rearwards to lock it in place.
3. Raise the recliner lever and raise the seat back upright.
4. Inspect the seat to ensure it is firmly locked in place.

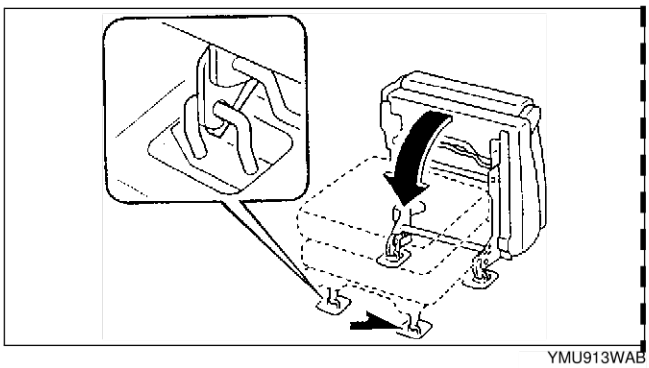

YMU913WAB

End Of Sub

SECOND-ROW SEAT DISASSEMBLY/ASSEMBLY

AME775200106W03

General (R.H.D.) Specs.

1. Disassemble in the order indicated in the table.
2. Assemble in the reverse order of disassembly.

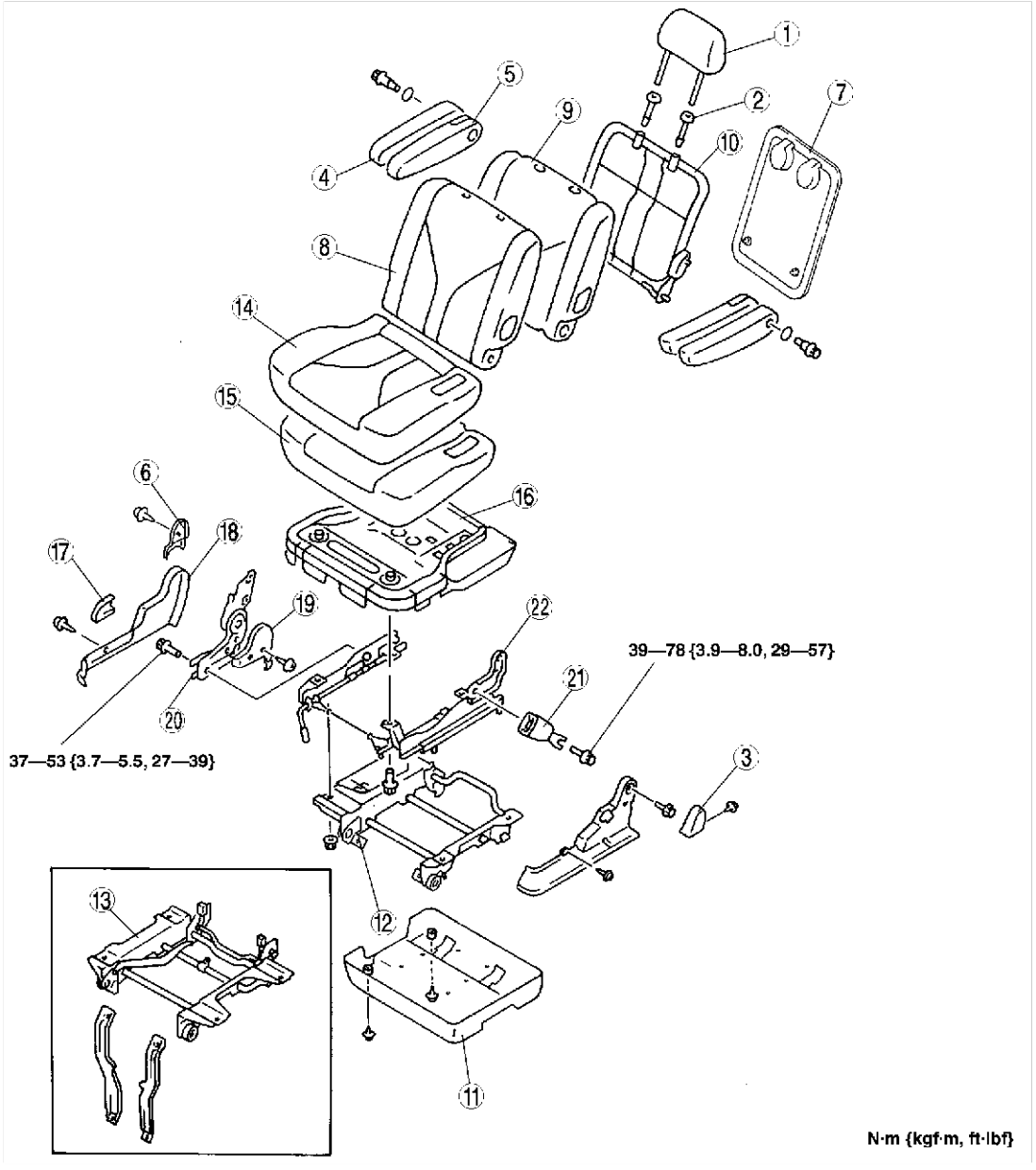

AME7752W013

1	Headrest
2	Pole guide
3	Side cover No.1
4	Armrest trim
5	Armrest pad
6	Knuckle upper cover
7	Seat back rear cover
8	Seat back trim
9	Seat back pad
10	Seat back frame
11	Seat under bracket side cover

12	Seat under bracket (Right)
13	Seat under bracket (Left)
14	Seat cushion trim
15	Seat cushion pad
16	Seat cushion frame
17	Recliner lever
18	Side cover No.2
19	Reverse cover
20	Recliner knuckle
21	Second-row buckle
22	Slide adjuster

S

European (L.H.D.) Specs.

1. Disassemble in the order indicated in the table.
2. Assemble in the reverse order of disassembly.

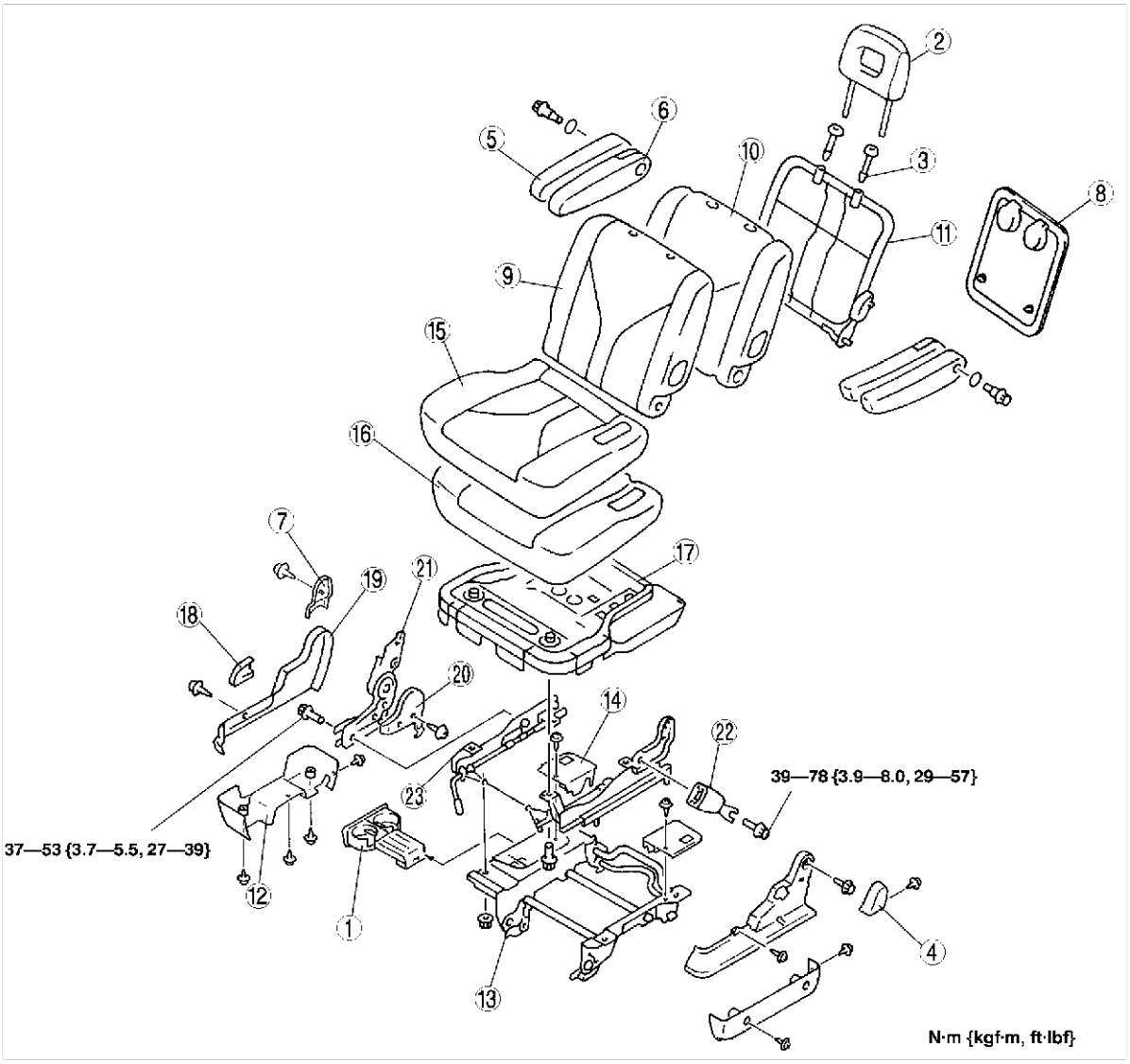

AMU0913W013

1	Cup holder (Right side seat only)
2	Headrest
3	Pole guide
4	Side cover No.1
5	Armrest trim
6	Armrest pad
7	Knuckle upper cover
8	Seat back rear cover
9	Seat back trim
10	Seat back pad
11	Seat back frame
12	Seat under bracket side cover

13	Seat under bracket
14	Seat under bracket upper cover
15	Seat cushion trim
16	Seat cushion pad
17	Seat cushion frame
18	Recliner lever
19	Side cover No.2
20	Reverse cover
21	Recliner knuckle
22	Second-row buckle
23	Slide adjuster

End Of Sie

THIRD-ROW SEAT REMOVAL/INSTALLATION

AME775200108W02

Seat

1. Remove the bolts, and remove the third-row seat.
2. Install in the reverse order of removal.

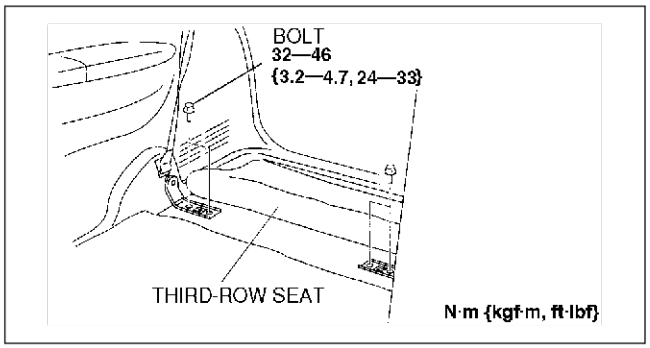

AMU0913W016

Hinge

1. Remove the third-row seat.
2. Remove the rear side trim.
3. Remove the third-row seat belt lower anchor.
4. Remove in the order indicated in the table.
5. Install in the reverse order of removal.

1	Hinge cover
2	Hinge

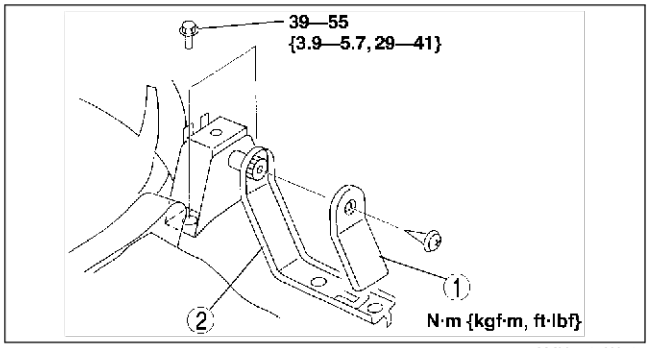

AMU0913W017

Striker

1. Remove the rear side trim.
2. Remove the nuts, and remove the striker.
3. Install in the reverse order of removal.

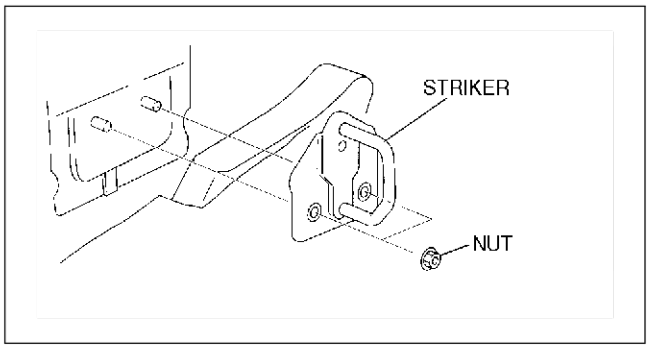

AMU0913W015

End Of Sec

S

THIRD-ROW SEAT DISASSEMBLY/ASSEMBLY

AME775200108W03

1. Disassemble in the order indicated in the table.
2. Assemble in the reverse order of disassembly.

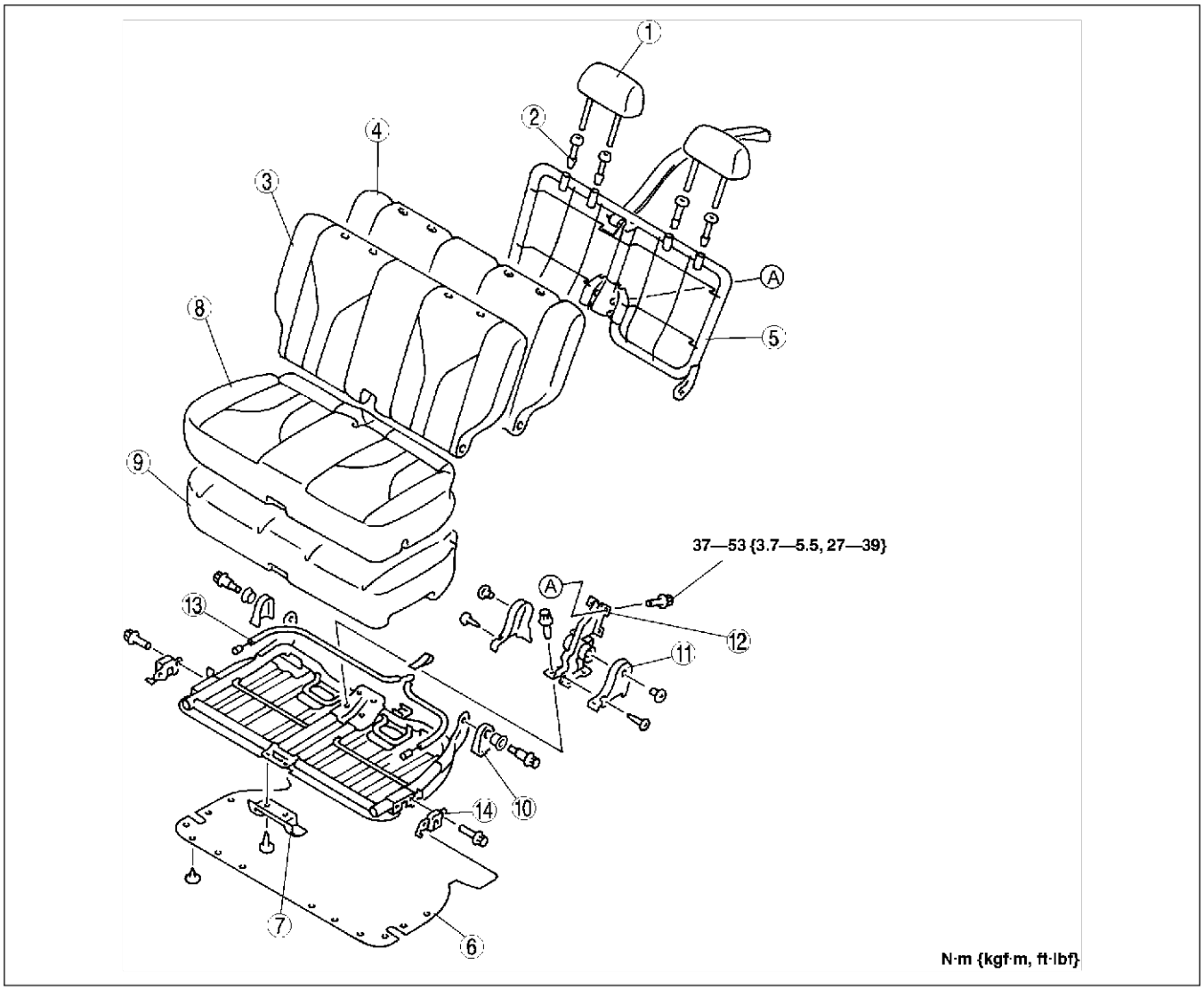

AME7752W007

1	Headrest
2	Pole guide
3	Seat back trim
4	Seat back pad
5	Seat back frame
6	Seat cushion under cover
7	Cover

8	Seat cushion trim
9	Seat cushion pad
10	Hinge cover
11	Recliner knuckle cover
12	Recliner knuckle
13	Cable
14	Catch

End Of Sie

LONG SLIDER AND ADAPTER REMOVAL/INSTALLATION

AME775200107W01

1. Remove the second-row seat. (See S–31 SECOND-ROW SEAT REMOVAL/INSTALLATION.)
2. Remove the front floor covering. (See S–26 FRONT FLOOR COVERING REMOVAL/INSTALLATION.)
3. Remove in the order indicated in the table.
4. Install in the reverse order of removal..

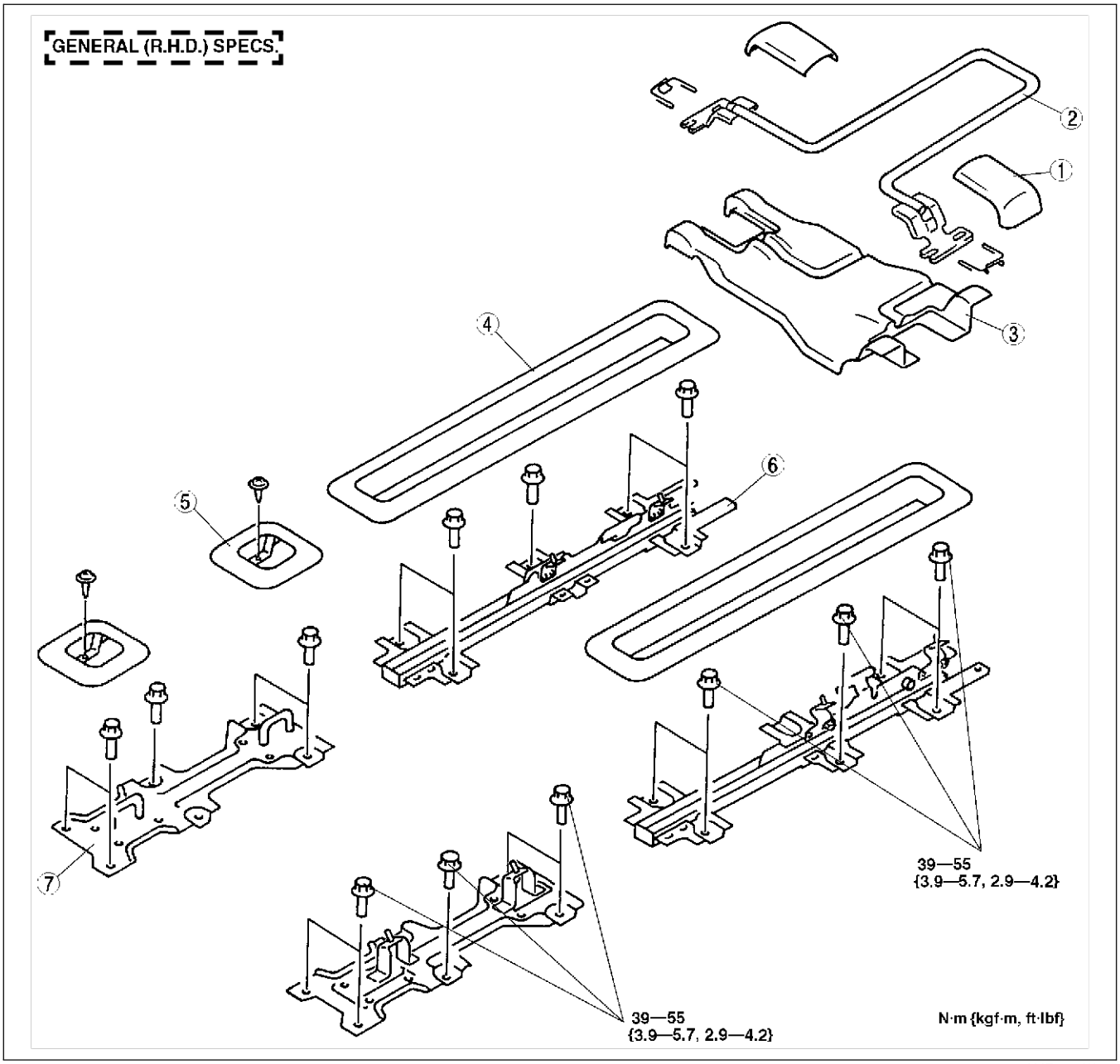

AME7752W012

1	Slide lever cover No.1
2	Slide lever
3	Slide lever cover No.2
4	Long slider cover

5	Adapter cover
6	Long slider
7	Adapter

S

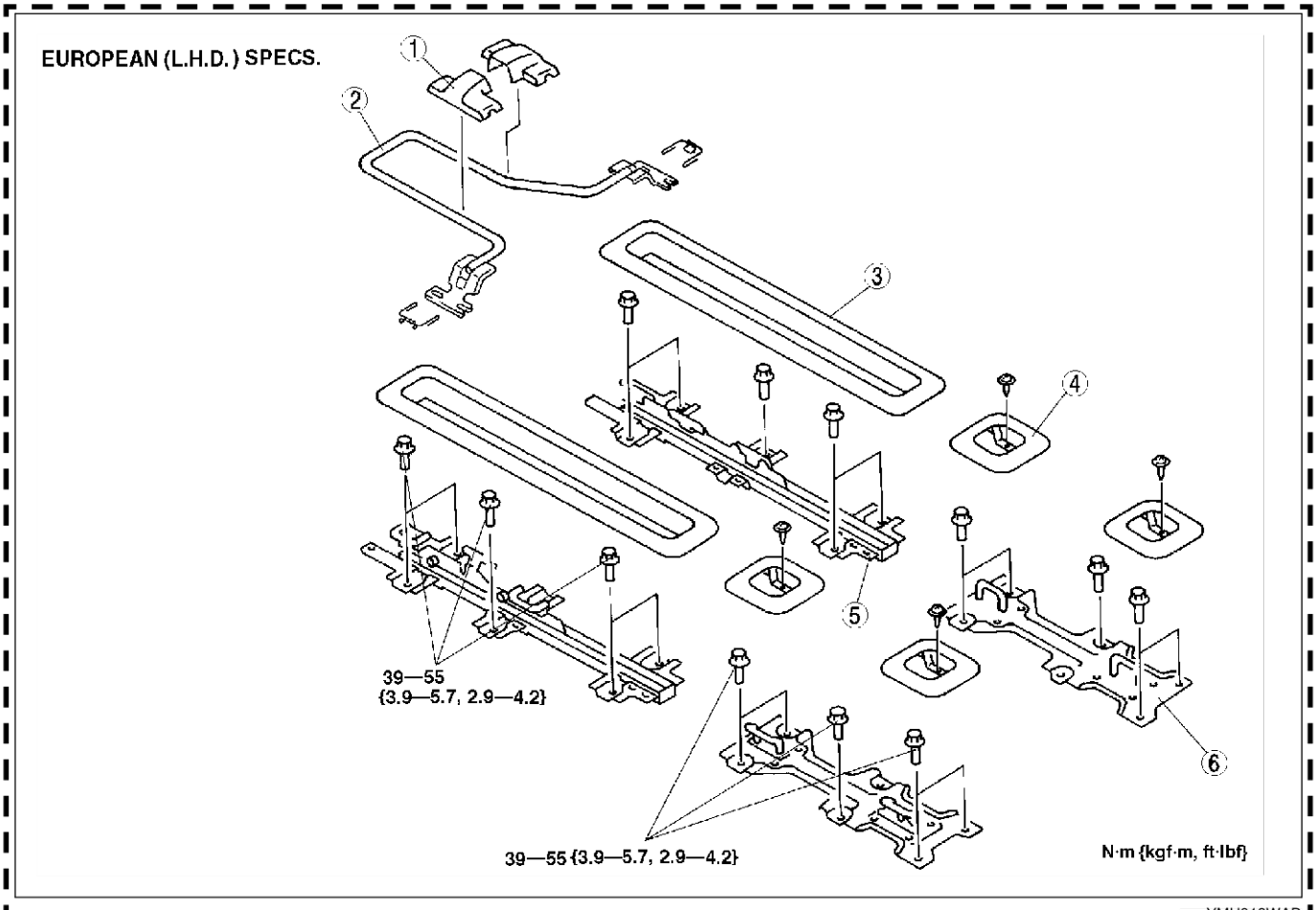

YMU913WAD

1	Slide lever cover
2	Slide lever
3	Long slider cover

4	Adapter cover
5	Long slider
6	Adapter

SEAT WARMER SWITCH INSPECTION

AME775259000W01

1. Remove the seat warmer switch.
2. Inspect for continuity between the seat warmer switch terminals using an ohmmeter.
   - If not as specified, replace the seat warmer switch.

Driver's side

○—○ : Continuity ○—◎—○ : Bulb

Switch position	Terminal				
	F	G	H	B	D
On	○	○	◎	○	○—◎—○
Off		○	◎	○	○—◎—○

Passenger's side

○—○ : Continuity ○—◎—○ : Bulb

Switch position	Terminal				
	C	E	F	B	D
On	○	○	◎	○	○—◎—○
Off		○	◎	○	○—◎—○

AME7752W008

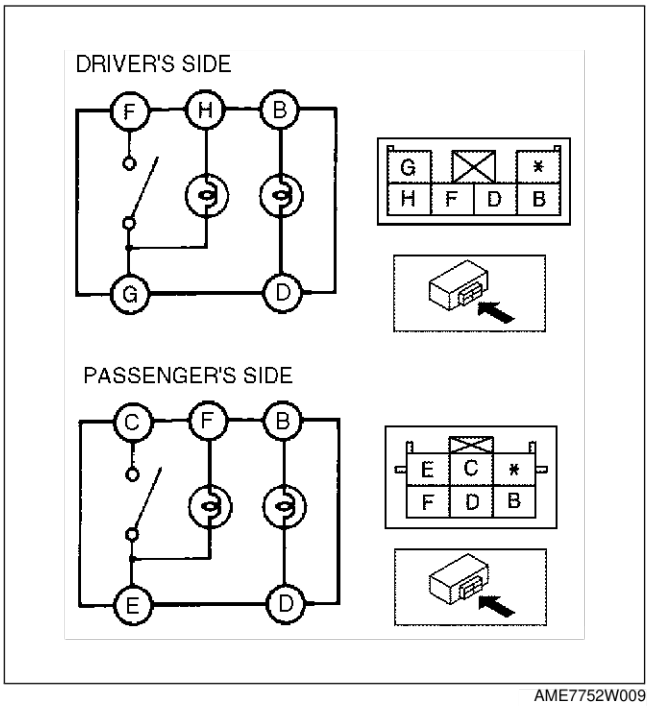

AME7752W009

TROUBLESHOOTING [POWER WINDOW SYSTEM]

FOREWORD

AME778058000W01

- Always perform basic power window system inspection before troubleshooting.
- The table below lists unique troubleshooting for the automatic window return function with the jam-safe power window.

Caution

- **The automatic window return may not operate properly if the following is performed on the front door.**
  - **— The power window motor is operated without the door glass properly installed.**
  - **— The door glass is replaced.**
  - **— The glass run channel is replaced.**
  - **— The power window regulator is removed or installed. If a new power window regulator is installed, however, the power window motor does not require resetting.**

End Of Ste

BASIC POWER WINDOW SYSTEM INSPECTION

AME778058000W02

Manual Mode Function Inspection

STEP	INSPECTION		ACTION
1	• Turn ignition switch to ON position. • Do all windows go up and down in manual mode using power window main switch?	Yes	Go to next step.
		No	• Inspect the following items: — Power window main switch power supply fuses — Power window main switch ground wiring harness — Power window main switch power supply wiring harnesses — Wiring harness between power window main switch and power window motor — Power window main switch — Power window motor — Each power window motor wire installation point — Each window installation point on its carrier plate — Each power window regulator installation point on each door • Repair or replace the problem area, then go to Step 4.
2	• Does each window go up and down in manual mode using power window subswitch?	Yes	Go to next step.
		No	• Inspect the following items: — Power window main switch (power-cut switch system malfunction) — Power window subswitch — Subswitch power supply wiring harnesses • Repair or replace the problem area, then go to automatic mode function inspection.
3	• Turn power-cut switch UNLOCK. • Push/pull power window main switch (switches for all doors in manual mode). • Does only driver-side front window go up and down?	Yes	• Manual mode function is normal. • Go to automatic mode function inspection.
		No	Replace power window main switch, then go to automatic mode function inspection (power-cut switch system malfunction).
4	• Were any of the following parts replaced or reinstalled? — Driver-side front power window motor — Driver-side front door glass — Driver-side front power window regulator — Driver-side front power window wire — Driver-side front glass run channel	Yes	Reset the driver-side front power window motor, then go to automatic mode function inspection. (See Section S.)
		No	Go to automatic mode function inspection.

S

Automatic Mode Function Inspection

STEP	INSPECTION		ACTION
1	• Turn ignition switch to ON position. • Operate power window main switch for driver-side front door in automatic mode. • Does driver-side front window go up and down?	Yes	Go to next step.
		No	**Driver-side front window does not go up and down in automatic mode:** • Go to Step 1 of NO. 1 DRIVER-SIDE FRONT WINDOW DOES NOT GO UP AND DOWN IN AUTOMATIC MODE. **Driver-side front window go up and down in automatic mode, but driver-side front window reverses:** • Go to Step 1 of NO. 3 DRIVER-SIDE FRONT WINDOW REVERSES EVEN THOUGH THE GLASS DOES NOT ENCOUNTER A FOREIGN OBJECT WHILE IT IS GOING UP IN AUTOMATIC MODE.
2	• Gently pull the driver-side front power window switch while driver-side front window is going down in automatic mode. • Does the glass stop?	Yes	Go to next step.
		No	Replace power window main switch, then go to automatic window return function inspection.
3	• Gently press the driver-side front power window switch while driver-side front window is going up in automatic mode. • Does the glass stop?	Yes	• Automatic mode function is normal. • Go to automatic window return function inspection.
		No	Replace power window main switch, then go to automatic window return function inspection.

Automatic Window Return Function Inspection

STEP	INSPECTION		ACTION
1	• Turn ignition switch to ON position. • Lower driver-side front window completely. • Use power window main switch to close driver's window in automatic mode. • Does window automatically reverse even though the glass does not encounter a foreign object while it is going up in automatic mode?	Yes	Go to Step 1 of NO. 3 DRIVER-SIDE FRONT WINDOW REVERSES EVEN THOUGH THE GLASS DOES NOT ENCOUNTER A FOREIGN OBJECT WHILE IT IS GOING UP IN AUTOMATIC MODE.
		No	Go to next step.
2	• Lower driver-side front window completely. • Take a hammer and hold it against the inside of the top of the window frame so that the window will hit its handle when it is closed. • Raise the window using automatic mode. • When the window hits the hammer handle, does it immediately reverse and go down to **approximately 200 mm {7.87 in}** from the completely closed position?	Yes	• Automatic window return function inspection is normal. • Go to IG OFF timer function inspection.
		No	Go to Step 1 of NO. 2 DRIVER-SIDE FRONT WINDOW DOES NOT REVERSE, EVEN WHEN ENCOUNTERING A FOREIGN OBJECT IN ITS PATH.

IG OFF Timer Function Inspection

STEP	INSPECTION		ACTION
1	• Turn ignition switch to ON position. • In automatic mode, push down power window main switch for driver-side front window. Window should go down within **approximately 40 seconds** from ignition switch OFF position. • In manual mode (finger continuously depressing power window main switch), window should go down within **approximately 40 seconds** from ignition switch OFF position. • Does driver-side front window go down?	Yes	Go to next step.
		No	Replace power window main switch, then go to next step.
2	• Turn ignition switch to ON position. • In automatic mode, pull up power window main switch for driver-side front window. Window cannot go up within **approximately 40 seconds** from ignition switch OFF position. • Verify that driver-side front window does not operate. • Does driver-side front window go up?	Yes	Replace power window main switch, then go to next step.
		No	Go to next step.
3	• Turn ignition switch to ON position. • Lower driver-side front window completely. • Take a hammer and hold it against the inside of the top of the window frame so that the window will hit its handle when it is closing. • Raise the window using manual mode. • When the window hits the hammer handle, does it immediately reverse and go down to **approximately 200 mm {7.87 in}** from the completely raised position?	Yes	Go to next step.
		No	Replace power window main switch, then go to next step.
4	• Open any door. • Turn ignition switch to ON position. • Push/pull power window main switch for driver-side front window within **approximately 40 seconds** from ignition switch OFF position. • Verify that driver-side front window does not go up or down. • Does driver-side front window go up or down?	Yes	• Inspect door switch and related warning harness. • If above parts are okay, replace power window main switch, then go to next step. • If above parts are incorrect, repair or replace malfunction part(s), then go to next step.
		No	Go to next step.
5	• Close all doors. • Turn ignition switch to ON position. • Push/pull power window main switch for driver-side front window after **approximately 60 seconds** from ignition switch OFF position. • Verify that driver-side front window does not go up or down. • Does driver-side front window go up or down?	Yes	Replace power window main switch, then go to two-step down function inspection.
		No	• IG OFF timer function is normal. • Go to two-step down function inspection..

Two-step Down Function Inspection

- The distance the door glass opens can be changed using the two-step down function. (**Approximately 20-100 mm {0.79-3.93 in}**)
- The two-step down function can be made non-operative. (The function is operative at the initial setting.)
- The two-step down function does not function during IG OFF timer.

STEP	INSPECTION		ACTION
1	• Turn ignition switch to ON position. • Raise driver-side front window completely. • When the driver-side front window is lowered using manual mode, does it go down to approximately **30 mm {1.18 in}** from the completely closed position and stop for 1 second? (This inspection cannot be carried out during IG OFF timer function operation.)	Yes	• two-step down function is normal. • Recheck malfunction symptoms.
		No	Replace power window main switch.

TROUBLESHOOTING [KEYLESS ENTRY SYSTEM]

ON-BOARD DIAGNOSTIC FUNCTION

AME778269000W01

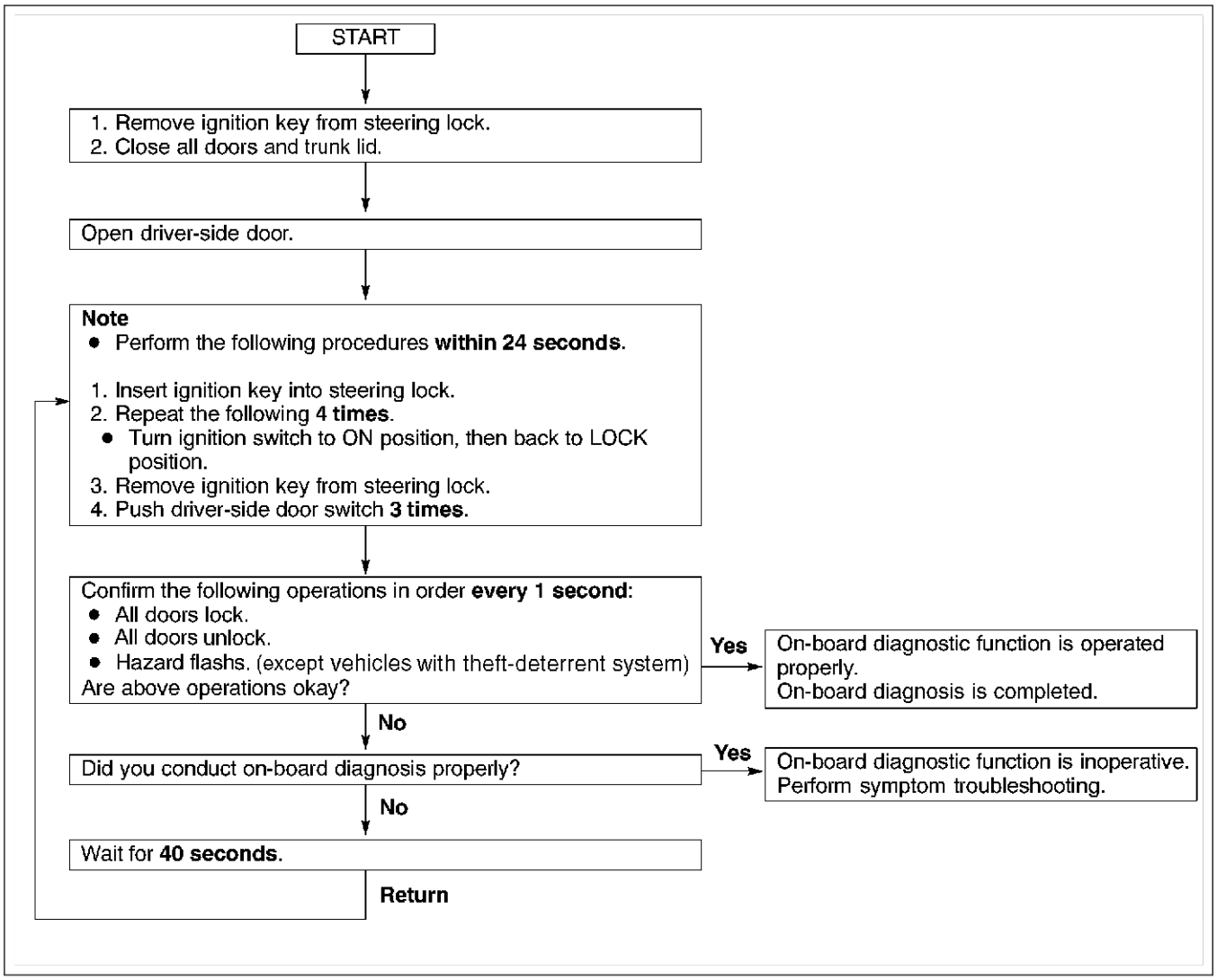

Y3E7782W001

End Of Sie

TROUBLESHOOTING INDEX

AME778269000W02

No.	TROUBLESHOOTING ITEM	DESCRIPTION	PAGE
1	One or more on-board diagnostic functions inoperative.	• Malfunction in hazard warning light system (except vehicle with theft-deterrent system), horn system (Australian specs.) door lock linkage system, or driver's door key cylinder switch system.	(See S–41 NO. 1 ONE OR MORE ON-BOARD DIAGNOSTIC FUNCTIONS INOPERATIVE)
2	All on-board diagnostic functions inoperative.	• Malfunction in keyless unit power supply circuit, door switch circuit or keyless unit ground circuit.	(See S–43 NO. 2 ALL ON-BOARD DIAGNOSTIC FUNCTIONS INOPERATIVE)

End Of Sie

NO. 1 ONE OR MORE ON-BOARD DIAGNOSTIC FUNCTIONS INOPERATIVE

AME778269000W03

- When performing an asterisked (*) troubleshooting inspection, shake the wiring harness and connectors while performing the inspection to discover whether poor contact points are the cause of any intermittent malfunctions. If there is a problem, check to make sure connectors, terminals and wiring harnesses are connected correctly and undamaged.

1	One or more on-board diagnostic functions inoperative
DESCRIPTION	• Malfunction in hazard warning light system (except vehicle with theft-deterrent system),horn system (Australian specs.), door lock linkage system, or driver's door key cylinder switch system.
POSSIBLE CAUSE	• Malfunction in horn system (Australian specs.) — Horn circuit malfunction — Keyless control unit malfunction — Malfunction in wiring harness between keyless control unit and horn relay • Malfunction in hazard warning light system (except vehicle with theft-deterrent system) — Hazard warning light circuit — Keyless unit malfunction — Malfunction in wiring harness between keyless unit and flasher unit • Malfunction in door lock linkage • Malfunction in keyless unit door lock/unlock signal circuit — Keyless unit malfunction — Malfunction in wiring harness between keyless unit and door lock timer unit

Diagnostic procedure

Note

- For vehicles with theft-deterrent system, follow the procedure from Step 4.

STEP	INSPECTION		ACTION
1	**INSPECT HORN AND HAZARD WARNING LIGHT OPERATION DURING ON-BOARD DIAGNOSIS** • Did all of the following items work during on-board diagnostic function operation? — Horns sounded intermittently (Australian specs.) — Hazard lights flashed	Yes	Go to Step 7.
		No	(Australian specs.) Go to next step. (Except Australian specs.) Go to step 6.
2	**INSPECT HORN OPERATION DURING ON-BOARD DIAGNOSIS** • Did horns sound intermittently during on-board diagnostic function operation?	Yes	Go to step 7.
		No	Go to next step.
3	**INSPECT HORN CIRCUIT** • Do horns sound when depressing horn switch on vehicle?	Yes	Go to step 6.
		No	Inspect horn circuit.
4	**INSPECT WIRING HARNESS BETWEEN KEYLESS UNIT AND HORN RELAY FOR CONTINUITY** • Turn ignition switch LOCK position. • Disconnect keyless unit connector (16-pin) or short cord connector (12-pin) and horn relay connector. • Is there continuity between keyless unit connector terminal E or short cord connector terminal E and horn relay connector?	Yes	Replace keyless unit and reprogram keyless unit ID cord, then go to step 11.
		No	Repair wiring harness between keyless unit and horn relay, then go to step 11.
5	**INSPECT HAZARD WARNING LIGHT CIRCUIT** • Do hazard warning lights flash when hazard warning switch is on?	Yes	Go to next step.
		No	Inspect hazard warning light circuit.

STEP	INSPECTION		ACTION
*6	**CHECK TO SEE WHETHER MALFUNCTION IS IN WIRING HARNESS (BETWEEN KEYLESS UNIT AND FLASHER UNIT) OR KEYLESS UNIT** • Measure voltage at keyless unit connector terminal H or short cord connector terminal D during on-board diagnostic function operation. — When hazard warning light flashes: **Alternates between B+ and below 1.0 V** • Is voltage as above?	Yes	Recheck malfunction symptoms, then repeat from Step 1 if malfunction recurs.
		No	• Inspect wiring harness between keyless unit and flasher unit. — If wiring harness is OK, replace keyless unit and reprogram transmitter ID code, then go to Step 11. — If there is wiring harness malfunction, repair wiring harness, then go to Step 11.
7	**MAKE SURE THAT ALL DOORS LOCK AND UNLOCK DURING ON-BOARD DIAGNOSIS** • Did all doors unlock and lock during on-board diagnostic function operation?	Yes	Recheck malfunction symptoms, then repeat from Step 1 if malfunction recurs.
		No	Go to next step.
8	**INSPECT DOOR LOCK LINKAGE** • Operate inner door lock knob and make sure door locks and unlocks manually. • Does every door lock system work?	Yes	Go to next step.
		No	Inspect door lock linkage.
*9	**CHECK TO SEE WHETHER MALFUNCTION IS IN DOOR LOCK ACTUATOR, DOOR LOCK TIMER UNIT GROUND CIRCUIT OR ELSEWHERE** • Measure voltage at keyless unit connector terminal O or short cord connector terminal F during on-board diagnostic function operation. — With double locking system or theft-deterrent system • All door locked: **5→2.5→5 V** • All door unlocked: **5→below 1.0 V→5 V** — Other • All door locked: **B+→6 V→B+** • All door unlocked: **B+→below 1.0 V→B+** • Is voltage as above?	Yes	Recheck malfunction symptoms, then repeat from Step 1 if malfunction recurs.
		No	• Inspect door lock timer unit connector. • Inspect wiring harness between keyless unit and door lock timer unit. — If above parts are OK, go to next step. — If above parts malfunction, repair malfunctioning part.
*10	**CHECK TO SEE WHETHER MALFUNCTION IS IN KEYLESS UNIT OR DOOR LOCK TIMER UNIT** • Measure voltage at door lock timer unit connector terminal F. • Is voltage as follows? — With double locking system or theft-deterrent system: **5 V** — Other: **B+**	Yes	Replace keyless unit and reprogram transmitter ID code, then go to next step.
		No	Replace door lock timer unit, then go to next step.
11	**RECHECK MALFUNCTION SYMPTOM AFTER REPAIR** • Does keyless entry system operate properly?	Yes	Troubleshooting completed. Explain repairs to customer.
		No	Recheck malfunction symptoms, then repeat from Step 1 if malfunction recurs.

End Of Sie

NO. 2 ALL ON-BOARD DIAGNOSTIC FUNCTIONS INOPERATIVE

AME778269000W04

- When performing an asterisked (*) troubleshooting inspection, shake the wiring harness and connectors while performing the inspection to discover whether poor contact points are the cause of any intermittent malfunctions. If there is a problem, check to make sure connectors, terminals and wiring harnesses are connected correctly and undamaged.

2	All on-board diagnostic functions inoperative
DESCRIPTION	• Malfunction in keyless unit power supply circuit, or keyless unit ground circuit.
POSSIBLE CAUSE	• Malfunction in IG1, B+ signal circuit of keyless unit — Keyless unit power supply fuse malfunction — Malfunction in wiring harness between keyless unit power supply fuse(s) and keyless unit itself • Malfunction in keyless unit door open/closed signal circuit — Door switch system malfunction — Keyless unit malfunction — Malfunction in wiring harness between keyless unit and door switch • Malfunction in keyless unit GND signal circuit — Malfunction in wiring harness between keyless unit and ground

Diagnostic procedure

STEP	INSPECTION		ACTION
1	**INSPECT KEYLESS UNIT POWER SUPPLY FUSES** • Are keyless unit power supply fuses okay?	Yes	Go to next step.
		No	Inspect for short to ground on blown fuse circuit. Repair or replace if necessary. Install appropriate amperage fuse.
2	**INSPECT DOOR SWITCH INSTALLATION** • Are door switches installed securely?	Yes	Go to next step.
		No	Install door switch(es) securely, then go back to Step 5 of keyless entry system preliminary inspection.
*3	**CHECK TO SEE WHETHER MALFUNCTION IS IN WIRING HARNESS (LACK OF CONTINUITY BETWEEN FUSE BLOCK AND KEYLESS UNIT) OR ELSEWHERE** • Turn ignition switch to ON position. • Measure voltage at following keyless unit terminals or short cord terminals: — IG1 signal (Terminal A) — B+ signal (Terminal B) • Are voltages **B+**?	Yes	Go to next step.
		No	Repair wiring harness between fuse block and keyless unit, then go to Step 8.
*4	**CHECK TO SEE WHETHER MALFUNCTION IS IN WIRING HARNESS (SHORT TO B+ BETWEEN FUSE BLOCK AND KEYLESS UNIT, OR BETWEEN KEYLESS UNIT AND GROUND) OR ELSEWHERE** • Turn ignition switch to LOCK position. • Disconnect keyless unit connector. • Measure voltage at following keyless unit connector terminal or short cord connector terminal: — IG1 signal (Terminal A) • Is voltage **B+**?	Yes	Repair malfunctioning wiring harness, then go to Step 8.
		No	Go to next step.
*5	**CHECK TO SEE WHETHER MALFUNCTION IS IN WIRING HARNESS (LACK OF CONTINUITY BETWEEN KEYLESS UNIT AND GROUND) OR ELSEWHERE** • Is there continuity between keyless unit connector terminal L or short cord connector terminal L and ground?	Yes	Go to next step.
		No	Repair wiring harness between keyless unit and ground, then go to Step 8.
6	**CHECK FOR CHECK CODE 04 IN INSTRUMENT CLUSTER** • Inspect door switch using instrument cluster input/output check mode. (See Section T) • Does DTC 04 function properly?	Yes	Go to next step.
		No	Repair door switch system using DTC 04 inspection procedure, then go to Step 8.

STEP	INSPECTION		ACTION
7	**INSPECT KEYLESS UNIT OR WIRING HARNESS (BETWEEN KEYLESS UNIT AND DOOR SWITCHES, CARGO COMPARTMENT LIGHT SWITCH FOR CONTINUITY)** • Open the driver-side door. • Is there continuity between keyless unit connector terminals C or short cord connector terminal C and ground?	Yes	Replace keyless unit and reprogram keyless unit ID code, then go to next step.
		No	Repair wiring harness between keyless unit and door switch(es), then go to next step.
8	**RECHECK MALFUNCTION SYMPTOM AFTER REPAIR** • Does keyless entry system operate properly?	Yes	Troubleshooting completed. Explain repairs to customer.
		No	Recheck malfunction symptoms, then repeat from Step 1 if malfunction recurs.

End Of Ste

BODY ELECTRICAL SYSTEM

FEATURES

OUTLINE T-3
OUTLINE OF CONSTRUCTION T-3
FEATURES T-3
EXTERIOR LIGHTING SYSTEM T-3
OUTLINE T-3
STRUCTURAL VIEW T-4
WARNING AND INDICATOR SYSTEM T-5
OUTLINE T-5
INSTRUMENT CLUSTER T-5
THEFT-DETERRENT SYSTEM T-10
OUTLINE T-10
STRUCTURAL VIEW T-11
SYSTEM WIRING DIAGRAM T-12
IMMOBILIZER SYSTEM T-13
OUTLINE T-13
STRUCTURAL VIEW T-13
SYSTEM WIRING DIAGRAM T-14
AUDIO AND NAVIGATION SYSTEM T-14
OUTLINE (AUDIO SYSTEM) T-14
BLOCK DIAGRAM (AUDIO SYSTEM) T-15
SPECIFICATIONS (AUDIO SYSTEM) T-15
AUDIO UNIT T-16
OUTLINE (CAR-NAVIGATION SYSTEM) T-18
STRUCTURAL VIEW (CAR-NAVIGATION SYSTEM) T-18
BLOCK DIAGRAM (CAR-NAVIGATION SYSTEM) T-19
SPECIFICATIONS (CAR-NAVIGATION SYSTEM) T-20
CAR-NAVIGATION UNIT T-20
CRUISE CONTROL SYSTEM T-21
OUTLINE T-21
STRUCTURAL VIEW T-22
SYSTEM WIRING DIAGRAM T-23
CRUISE ACTUATOR T-24
ON-BOARD DIAGNOSTIC T-25

SERVICE

OUTLINE T-26
SUPPLEMENTAL SERVICE INFORMATION ... T-26
POWER SYSTEM T-27
RELAY LOCATION T-27
RELAY INSPECTION T-28
EXTERIOR LIGHTING SYSTEM T-30
HEADLIGHT REMOVAL/INSTALLATION T-30
HEADLIGHT AIMING T-30
PARKING LIGHT BULB REMOVAL/INSTALLATION T-31
FRONT FOG LIGHT REMOVAL/INSTALLATION T-31
FRONT FOG LIGHT AIMING T-32
FRONT FOG LIGHT BULB REMOVAL/INSTALLATION T-33
REAR COMBINATION LIGHT REMOVAL/INSTALLATION T-33
FLASHER UNIT REMOVAL/INSTALLATION T-34
FLASHER UNIT INSPECTION T-35
WIPER AND WASHER T-36
WINDSHIELD WIPER MOTOR REMOVAL/INSTALLATION T-36
WARNING AND INDICATOR SYSTEM T-37
INSTRUMENT CLUSTER INPUT/OUTPUT CHECK MODE T-37
FUEL GAUGE SENDER UNIT REMOVAL/INSTALLATION T-54
FUEL GAUGE SENDER UNIT INSPECTION T-54
THEFT-DETERRENT SYSTEM T-55
THEFT-DETERRENT CONTROL MODULE INSPECTION T-55
IMMOBILIZER SYSTEM T-57
IMMOBILIZER UNIT INSPECTION T-57
IMMOBILIZER SYSTEM REPROGRAM PROCEDURE T-58
CODE WORD INPUT PROCEDURE T-64
AUDIO AND NAVIGATION SYSTEM T-66
ANTI-THEFT SYSTEM (AUDIO UNIT) T-66
UPPER MODULE REMOVAL/INSTALLATION T-71
LOWER MODULE REMOVAL/INSTALLATION T-72
ANTI-THEFT SYSTEM (CAR-NAVIGATION UNIT) T-73
GPS ANTENNA REMOVAL/INSTALLATION T-76
AUDIO CONTROL SWITCH REMOVAL/INSTALLATION T-76
AUDIO CONTROL SWITCH INSPECTION T-77
CRUISE CONTROL SYSTEM T-78
CRUISE ACTUATOR REMOVAL/INSTALLATION T-78
CRUISE ACTUATOR INSPECTION T-79
ACTUATOR CABLE REMOVAL T-80
ACTUATOR CABLE INSTALLATION T-81
CRUISE CONTROL SWITCH REMOVAL/INSTALLATION T-83
CRUISE CONTROL SWITCH INSPECTION T-84
AIR BAG SYSTEM T-85
CLOCK SPRING INSPECTION T-85
ON-BOARD DIAGNOSTIC [IMMOBILIZER SYSTEM] T-86
FOREWORD T-86
DTC TABLE T-86
DTC 01 ..... T-87
DTC 02 ..... T-87
DTC 03 ..... T-87
DTC 11 ..... T-88
DTC 21 ..... T-88
DTC 24 ..... T-88
DTC 30 ..... T-89

ON-BOARD DIAGNOSTIC [AUDIO] T-90
STARTING PROCEDURE FOR ON-BOARD DIAGNOSTIC TEST MODE T-90
SUPPLIER IDENTIFICATION PROCEDURE T-90
DTC CLEARING PROCEDURE T-91
DTC TABLE T-92
DTC 09 ERR22 OR 09:ER22 ..... T-93
DTC 09 ERR20 OR 09:ER20 ..... T-93
DTC 00 ERR10 OR 00:ER10 ..... T-94
DTC 03 ERR10 OR 03:ER10 ..... T-94
DTC 05 ERR10 OR 05:ER10 ..... T-95
DTC 06 ERR10 OR 06:ER10 ..... T-95
DTC 07 ERR10 OR 07:ER10 ..... T-96
DTC 03 ERR01 OR 03:ER01 ..... T-96
DTC 03 ERR02 OR 03:ER02 ..... T-97
DTC 03 ERR07 OR 03:ER07 ..... T-97
DTC 00 ERR01 OR 00:ER01 ..... T-97
DTC 00 ERR03 OR 00:ER03 ..... T-98
DTC 00 ERR04 OR 00:ER04 ..... T-98
DTC 05 ERR01 OR 05:ER01 ..... T-99
DTC 05 ERR07 OR 05:ER07 ..... T-99
DTC 06 ERR01 OR 06:ER01 ..... T-100
DTC 06 ERR02 OR 06:ER02 ..... T-100
DTC 06 ERR07 OR 06:ER07 ..... T-101
DTC 07 ERR01 OR 07:ER01 ..... T-101
DTC 07 ERR02 OR 07:ER02 ..... T-102
DTC 07 ERR07 OR 07:ER07 ..... T-102
DIAGNOSTIC ASSIST FUNCTION T-103
ON-BOARD DIAGNOSTIC [CAR-NAVIGATION SYSTEM] T-105
SPEAKER CONNECTION INSPECTION T-105
ON-BOARD DIAGNOSTIC [CRUISE CONTROL SYSTEM] T-106
CRUISE CONTROL SYSTEM WIRING DIAGRAM T-106
FOREWORD T-107
INSPECTION OF DTCS FOR OPERATION MODE T-107
DTC 21 ..... T-109
DTC 22 ..... T-109
DTC 31 ..... T-110
DTC 35 ..... T-111
DTC 37 ..... T-112
INSPECTION OF DTCS FOR CONDITION DETECTION MODE T-113
DTC 01 ..... T-114
DTC 05 ..... T-114
DTC 07 ..... T-115
DTC 11 ..... T-115
DTC 12 ..... T-116
DTC 13 ..... T-116
DTC 15 ..... T-116
ON-BOARD DIAGNOSTIC [AIR BAG SYSTEM] T-116-1
FOREWORD T-116-1
DTC TABLE T-116-1
DTC 22 ..... T-116-1
DTC 32 ..... T-116-4
TROUBLESHOOTING T-117
CAR-NAVIGATION SYSTEM (European (L.H.D. U.K.) specs.) T-117
NO.1 WHILE VEHICLE IS IN REVERSE, VEHICLE LOCATOR MARK GOES FORWARD T-117
NO.2 IN NAVIGATION MODE, VEHICLE LOCATOR MARK SKIPS. (INSTRUMENT CLUSTER OPERATES NORMALLY.) T-118
NO.3 EVEN WHEN HEADLIGHT SWITCH IS TURNED ON, DAYTIME SCREEN DOES NOT CHANGE TO NIGHT TIME SCREEN. (FRONT AND REAR COMBINATION LIGHTS OPERATE NORMALLY.) T-118
AIR BAG SYSTEM T-119
NO.1 AIR BAG SYSTEM WARNING LIGHT DOES NOT ILLUMINATE WHEN IGNITION SWITCH IS TURNED TO ON POSITION T-120
NO.2 AIR BAG SYSTEM WARNING LIGHT ILLUMINATES IMMEDIATELY AFTER IGNITION SWITCH IS TURNED TO ON POSITION AND REMAINS ILLUMINATED T-122
NO.3 PASSENGER-SIDE AIR BAG CUT-OFF INDICATOR LIGHT DOES NOT DIM WHEN IGNITION SWITCH IS AT ON POSITION AND HEADLIGHT SWITCH IS TURNED TO TNS OR HEADLIGHT POSITION. (CHILD RESTRAINT SEAT BUILT IN RESONATOR IS ATTACHED TO PASSENGER-SIDE SEAT.) T-124
NO.4 PASSENGER-SIDE AIR BAG CUT-OFF INDICATOR LIGHT REMAINS DIMMED WHEN IGNITION SWITCH IS AT ON POSITION AND HEADLIGHT SWITCH IS TURNED OFF. (CHILD RESTRAINT SEAT BUILT IN RESONATOR IS ATTACHED TO PASSENGER-SIDE SEAT.) T-126

OUTLINE

OUTLINE OF CONSTRUCTION

AME810201088W01

- The construction and operation of the body electrical system is essentially carried over from that of the previous MPV (LW) model, except the following features.

End Of Sta

FEATURES

AME810201088W02

Improved Design

- The design of the exterior lights has been changed.

Improved Marketability

- A warning light and indicator lights have been added in instrument cluster.
- The theft-deterrent system has changed with the addition of the answer-back function to the keyless entry system.
- A car-navigation system has been newly added.
- A 2-DIN size audio unit has been adopted. It provides various, extendable combinations (CD player/CD changer/cassette deck/MD player).

Improved Serviceability

- A diagnostic assist function has been adopted to the audio unit.
- A cruise actuator with built-in control module has been adopted.

Improved Security

- The immobilizer system has been modified. (European (L.H.D. U.K.) specs. (except AJ))

End Of Sta

EXTERIOR LIGHTING SYSTEM

OUTLINE

AME811201052W01

- The headlight and front combination light cusps have been rounded for design improvement.
- The parking light location has been changed to the headlight.
- A round-shaped front fog light has been adopted.
- Round-shaped reflectors have been adopted on the rear combination light as listed below.
  - — Brake light/taillight
  - — Rear turn light
  - — Back-up light
  - — Rear fog light (European (L.H.D. U.K.) specs.)
  - — Taillight (General (R.H.D.) specs.)
- A taillight has been added to the lowest position of the rear combination light. (General (R.H.D.) specs.)

End Of Sta

STRUCTURAL VIEW

AME811201052W02

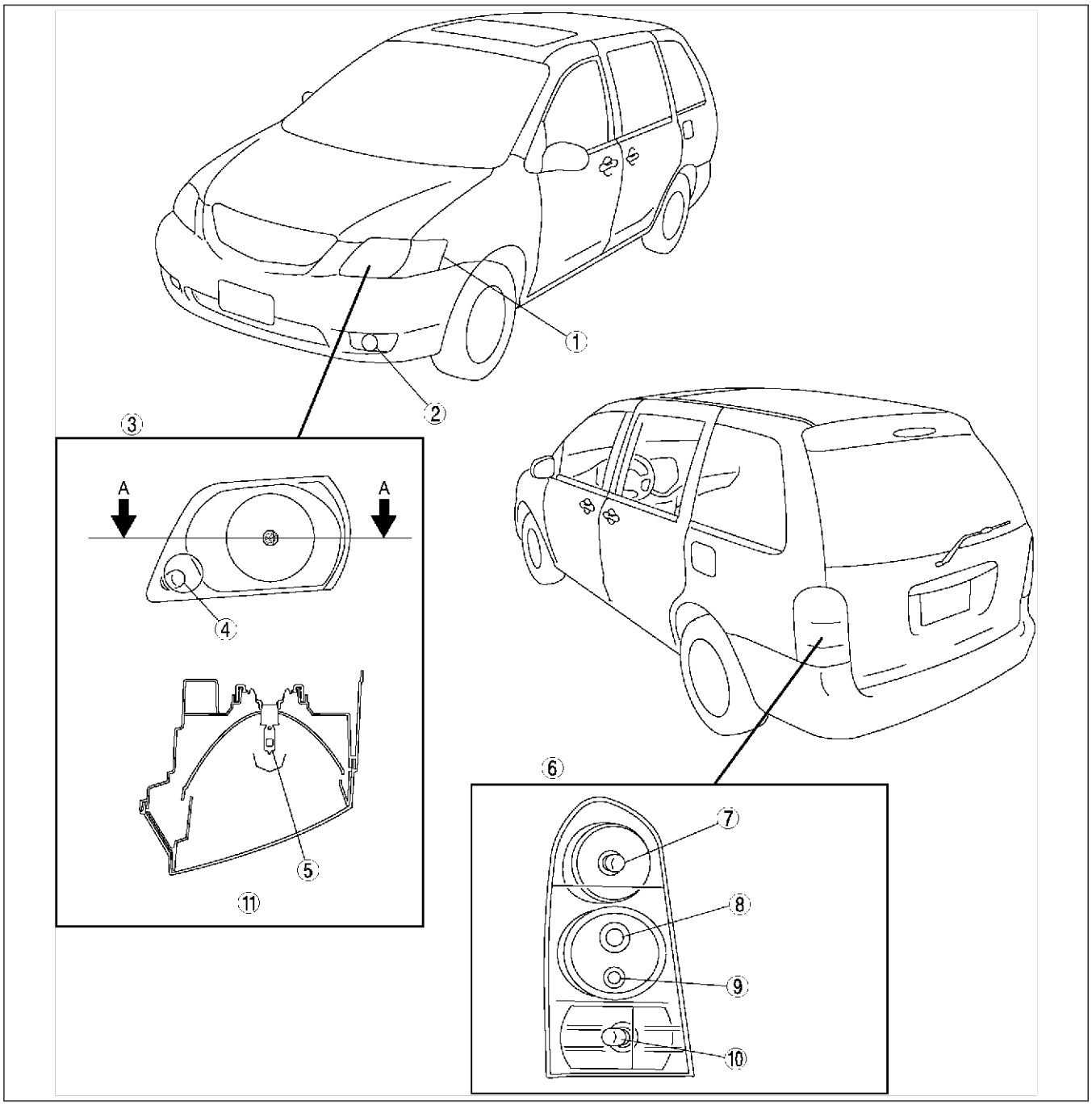

AME8112W201

1	Front combination light
2	Front fog light
3	Headlight
4	Parking light bulb
5	Headlight bulb
6	Rear combination light

7	Brake light/taillight bulb
8	Rear turn light bulb
9	Back-up light bulb
10	Rear fog light bulb (European (L.H.D. U.K.) specs.)
	Taillight bulb (General (R.H.D.) specs.)
11	Section A—A

End Of Sie

WARNING AND INDICATOR SYSTEM

OUTLINE

AME811801067W01

- In accordance with the TCS setting, the following indicator lights have been added:
  — TCS indicator light
  — TCS OFF light
- In accordance with the MZR-CD (RF Turbo) setting, the following warning and indicator lights have been added:
  — Glow indicator light
  — Sedimentor warning light
- The arrangement of the warning and indicator lights has been changed.
- The water temperature signal input source has been changed from the water temperature sensor to the PCM. As a result, the inspection procedure for DTC 24 of the input/output check mode has been changed.

End Of Sta

INSTRUMENT CLUSTER

AME811801067W02

Structural View

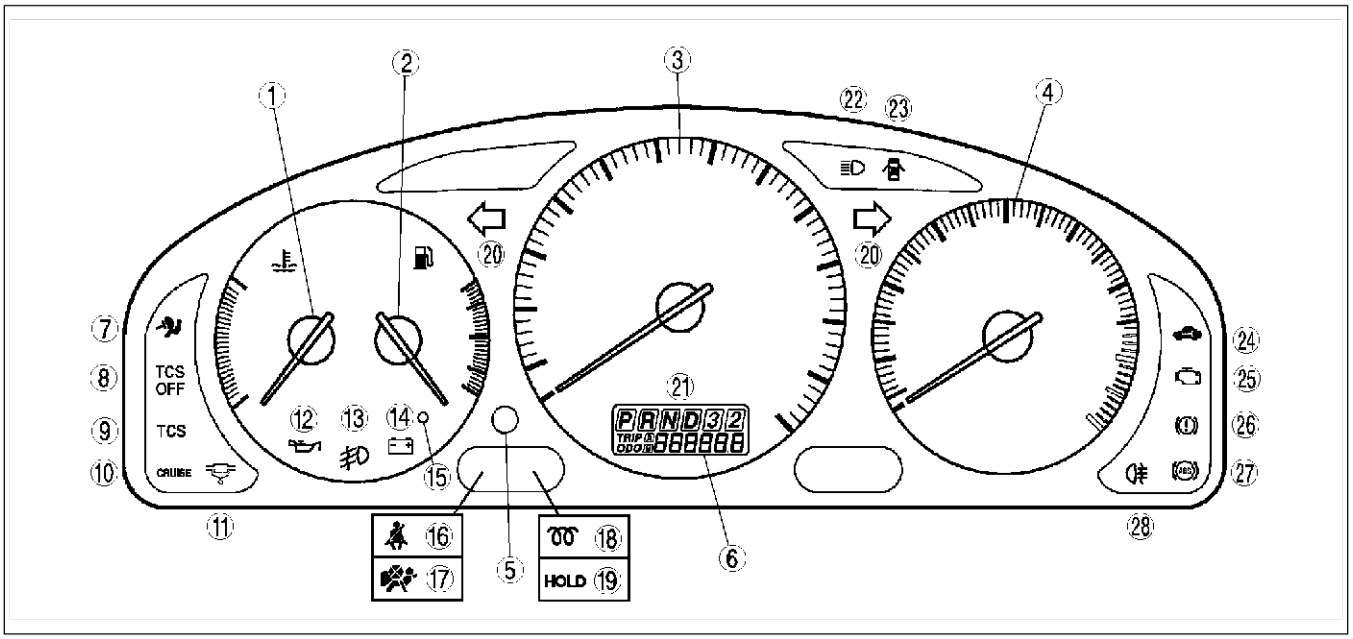

AME8118W109

1	Water temperature gauge
2	Fuel gauge
3	Speedometer

4	Tachometer
5	Odometer/tripmeter switch
6	Odometer/tripmeter

No.	Warning and indicator light	Note
7	Air bag system warning light	—
8	TCS OFF light	With TCS
9	TCS indicator light	With TCS
10	Cruise set indicator light	With cruise control system
11	Sedimentor warning light	MZR-CD (RF Turbo)
12	Oil pressure warning light	—
13	Front fog light indicator light	—
14	Generator warning light	—
15	Fuel-level warning light	—
16	Seat belt warning light	—
17	Passenger-side air bag cut-off indicator light	European (L.H.D. U.K.) specs.

No.	Warning and indicator light	Note
18	Glow indicator light	MZR-CD (RF Turbo)
19	HOLD indicator light	ATX
20	Turn indicator light	—
21	Selector indicator	ATX
22	High-beam indicator light	—
23	Door ajar warning light	—
24	Security light	With immobilizer system or theft-deterrent system
25	MIL	—
26	Brake system warning light	—
27	ABS warning light	—
28	Rear fog light indicator light	European (L.H.D. U.K.) specs.

T

System Wiring Diagram

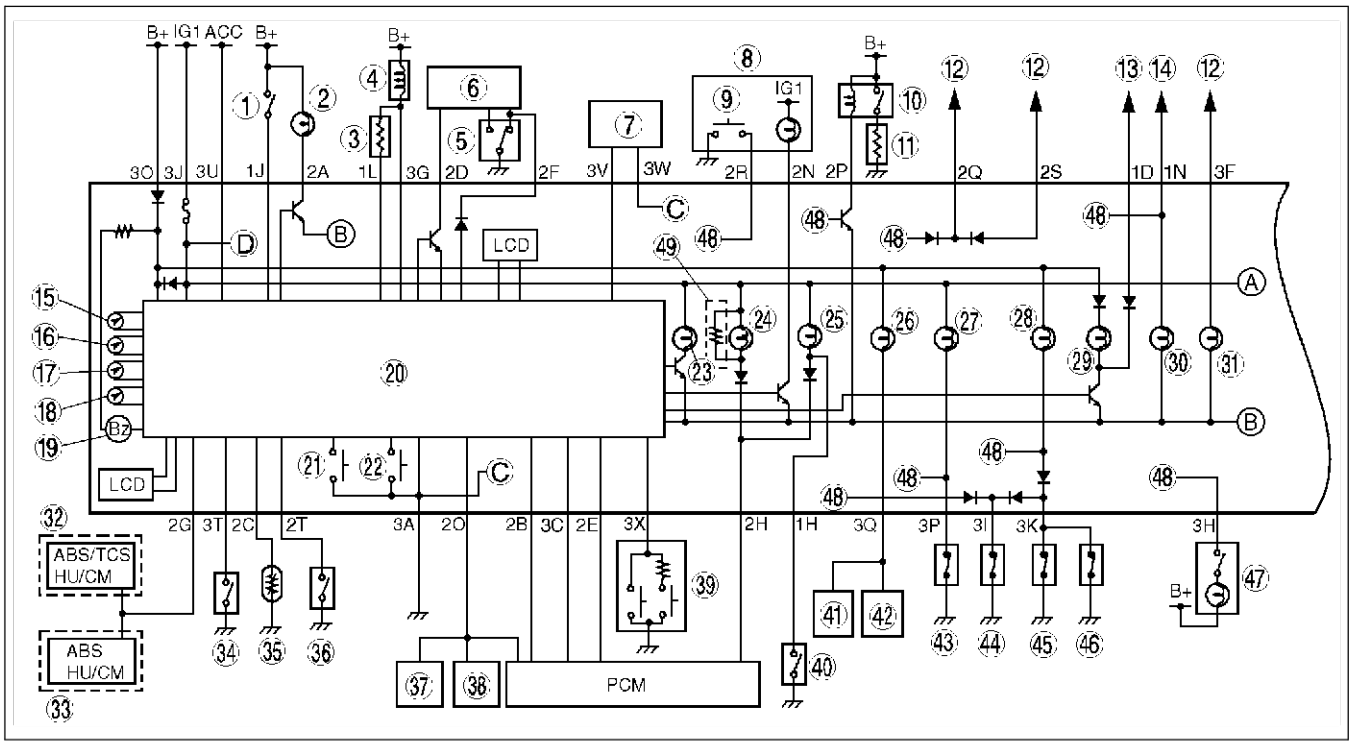

AME8118W110

1	Key reminder switch
2	Ignition key illumination
3	Key interlock resistor
4	Key interlock solenoid
5	Door lock-link switch
6	Door lock timer unit
7	Ambient temperature sensor
8	Front climate control unit
9	Rear window defroster switch
10	Rear window defroster relay
11	Filament
12	Headlight switch
13	Rear fog light relay (European (L.H.D. U.K.) specs.)
14	Front fog light relay
15	Speedometer
16	Tachometer
17	Fuel gauge
18	Water temperature gauge
19	Buzzer
20	Microcomputer
21	Odometer/tripmeter switch
22	Dimmer switch
23	Fuel-level warning light
24	Generator warning light
25	Sedimentor warning light (MZR-CD (RF Turbo))

26	Security light
27	Seat belt warning light
28	Door ajar warning light
29	Rear fog light indicator light (European (L.H.D. U.K.) specs.)
30	Front fog light indicator light
31	High beam indicator light
32	With ABS and TCS
33	With ABS, without TCS
34	P position switch
35	Fuel gauge sender unit
36	Rear fog light switch (European (L.H.D. U.K.) specs.)
37	Car-navigation unit
38	Cruise actuator (With cruise control system)
39	Drive information system switch
40	Sediment switch (MZR-CD (RF Turbo))
41	Immobilizer unit
42	Theft-deterrent control module
43	Buckle switch
44	Door switch (Driver-side)
45	Door switch (Except driver-side)
46	Cargo compartment light switch
47	Interior light
48	To microcomputer
49	MZR-CD (RF Turbo)

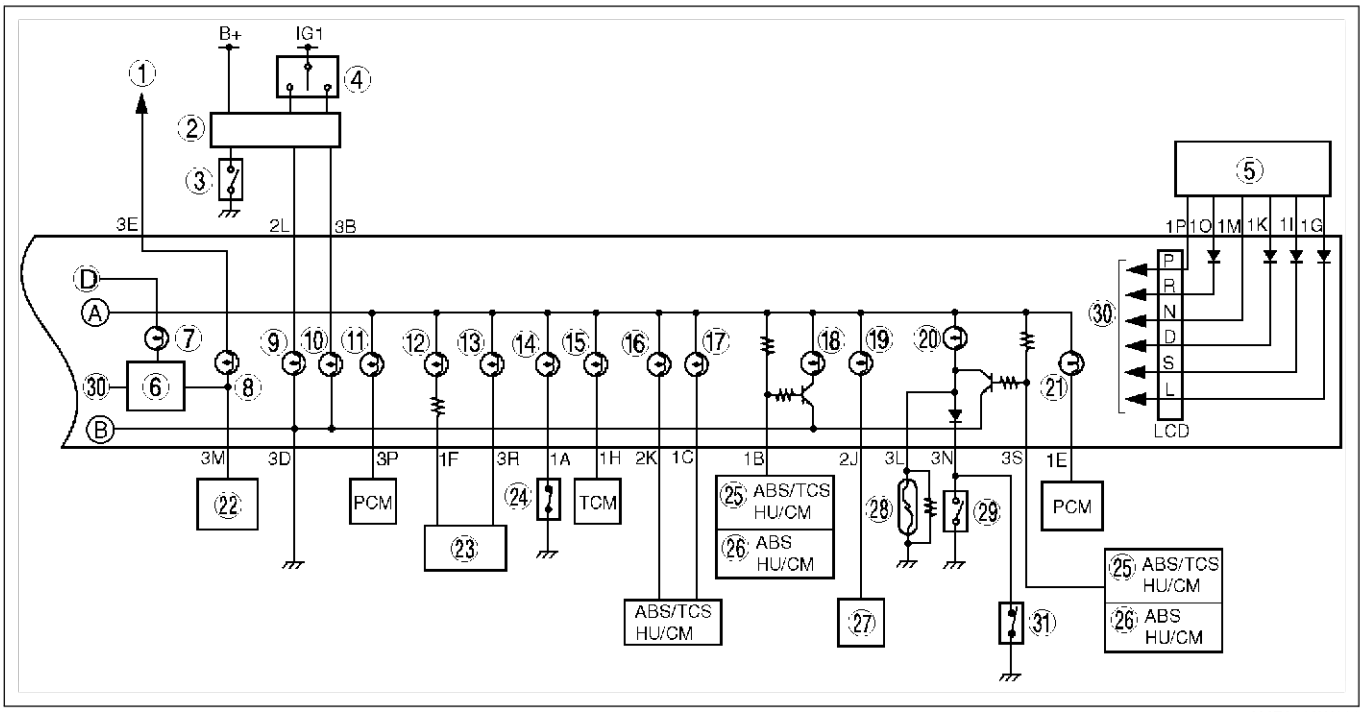

AME8118W111

1	TNS relay
2	Flasher unit
3	Hazard warning switch
4	Turn switch
5	TR switch
6	Dimmer control circuit
7	IG1 illumination
8	Instrument cluster illumination
9	Turn indicator light (LH)
10	Turn indicator light (RH)
11	Glow indicator light (MZR-CD (RF Turbo))
12	Passenger-side air bag cut-off indicator light
13	Air bag system warning light
14	Oil pressure warning light
15	HOLD indicator light (ATX)
16	TCS indicator light

17	TCS OFF light
18	ABS warning light
19	Cruise set indicator light
20	Brake system warning light
21	MIL
22	Panel light control switch
23	SAS unit
24	Oil pressure switch
25	With ABS and TCS
26	With ABS, without TCS
27	Cruise actuator (With cruise control system)
28	Brake fluid level sensor
29	Parking brake switch
30	To microcomputer
31	Vacuum switch (MZR-CD (RF Turbo))

T

Specifications

Item			Specification	
			New MPV	Previous MPV (LW) model
Speedometer	Meter type		Cross coil type	
	Indication range	European (L.H.D.) General (L.H.D.) Australian specs. (km/h)	0—210	
		UK (km/h {MPH})	0—210 {0—130}	
		General (R.H.D.) (km/h)	0—180	
	Input signal source	With ABS and TCS	ABS/TCS HU/CM	—
		With ABS, Without TCS	ABS HU/CM	
	Input signal		8 pulses/one rotation of speedometer driven gear	
	Output signal		4 pulses/one rotation of speedometer driven gear	
	Rated voltage (V)		DC 12	
Tachometer	Meter type		Cross coil type	
	Indication range (rpm)		0—8000	
	Red zone (rpm)		6700—8000	6500—8000
	Input signal source		PCM	
	Input signal		6 pulses/two engine rotations	
	Rated voltage (V)		DC 12	
Fuel gauge	Meter type		Cross coil type (Indicator needle type)	
	Rated voltage (V)		DC 12	
Water temperature gauge	Meter type		Cross coil type (Medium range stabilized type)	
	Rated voltage (V)		DC 12	
Odometer	Display		Liquid crystal display	
	Indication digits		6 digits	
	Characteristics		1 km is added for 5096 pulses of vehicle speed input signal 1 mile is added for 8202 pulses of vehicle speed input signal	
	Rated voltage (V)		DC 12	
Tripmeter	Display		Liquid crystal display	
	Indication digits		4 digits	
	Cancellation		Push method	
	Characteristics		1 km is added for 5096 pulses of vehicle speed input signal 1 mile is added for 8202 pulses of vehicle speed input signal	
	Rated voltage (V)		DC 12	

Bold frames: New specifications

Water Temperature Gauge Control

- The PCM outputs the coolant temperature signal to the microcomputer in the instrument cluster via serial communication.
- The microcomputer outputs the display signal to the water temperature gauge based on the input coolant temperature signal to control the gauge.

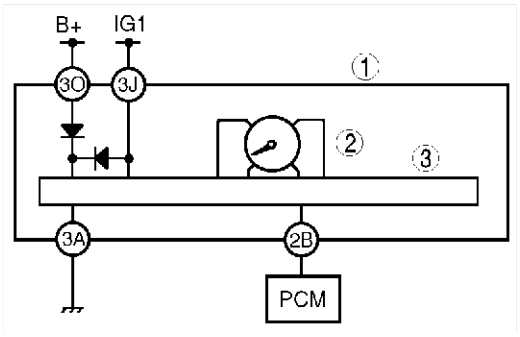

AME8118W112

1	Instrument cluster
2	Water temperature gauge
3	Microcomputer

Input/Output Check Mode

- The microcomputer built into the instrument cluster detects malfunctions in the input signal or individual part.
- The input/output check mode has input circuit check and individual part check functions.
- The operating procedure of the input/output check mode is the same as that of the previous MPV (LW) model.

Input circuit check

DTC	Part sending input signal	
	New MPV	Previous MPV (LW) model
01	Buckle switch	
04	Door switch	
05	Door lock-link switch	
07	Rear window defroster switch	
08	TNS relay	
09	Headlight switch	
10	With ABS and TCS: ABS/TCS HU/CM With ABS, without TCS: ABS HU/CM	ABS HU/CM
11	PCM (Engine speed input signal)	
22	Fuel gauge sender unit	
24	PCM (Water temperature sender unit)	Water temperature sender unit
29	Rear fog light switch	
31	Key reminder switch	
40	Front fog light relay	
41	P position switch	

Bold frames: New specifications

T

Individual part check

DTC	Simulated part sending input signal	
	New MPV	Previous MPV (LW) model
12	Speedometer	
13	Tachometer	
14	Buzzer	
15	Rear fog light relay	
16	Fuel-level warning light	
17	Rear window defroster indicator light	
18	Ignition key illumination	
20	Rear window defroster relay	
21	Door lock timer unit	
23	Fuel gauge	
25	Water temperature gauge	
26	LCD	
27	Interior light	
42	Key interlock solenoid	

End Of Sie

THEFT-DETERRENT SYSTEM

OUTLINE

AME812050000W01

- The following parts related to the theft-deterrent system have been changed with the addition of the answer-back function to the keyless entry system.
  - — Theft-deterrent control module
  - — Flasher unit
  - — Keyless unit
- The theft-deterrent system operation is the same as that of current PREMACY (CP) model.

End Of Sie

STRUCTURAL VIEW

AME812050000W02

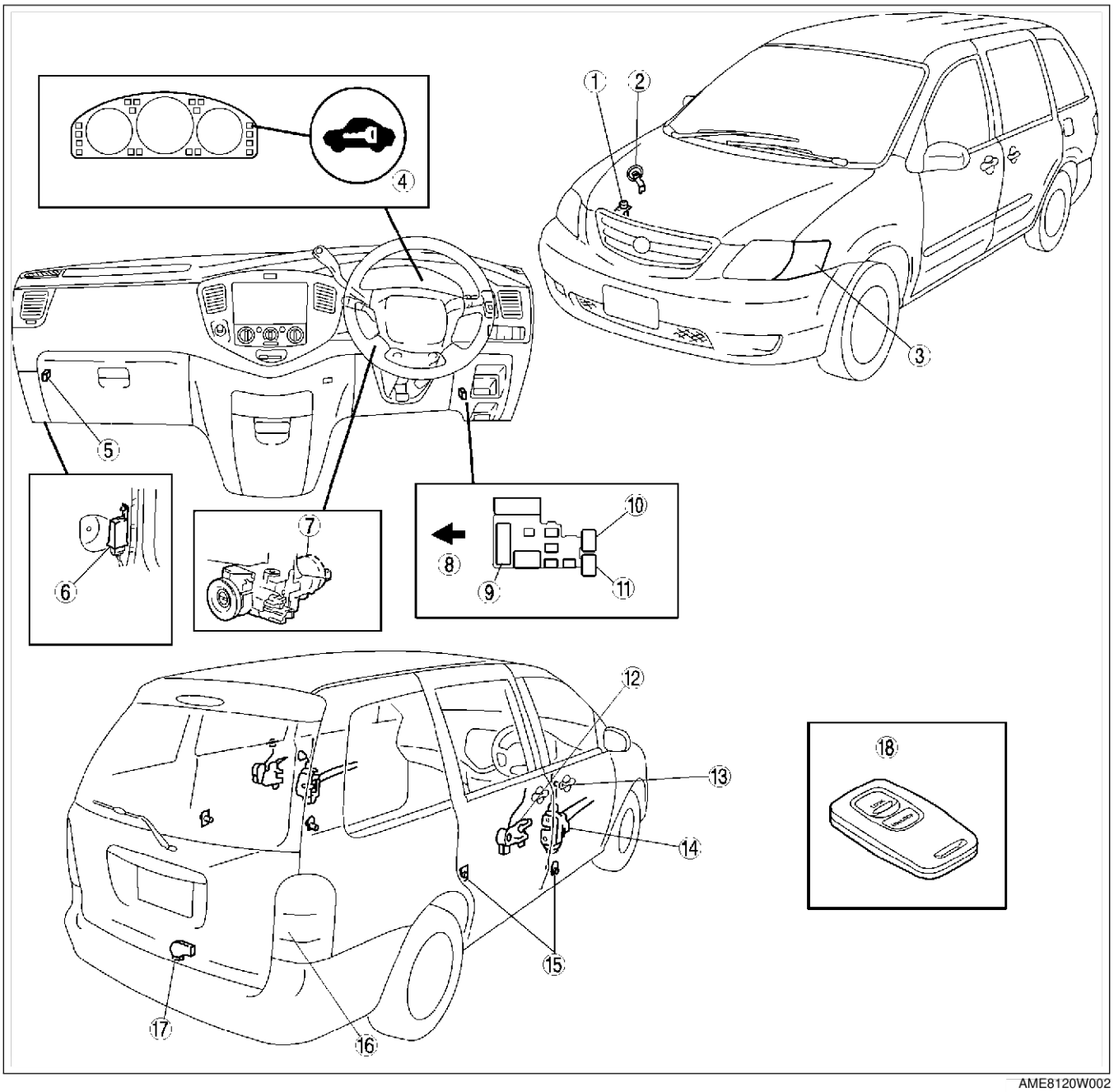

AME8120W002

1	Bonnet switch
2	Theft-deterrent horn
3	Front turn light
4	Security light
5	Keyless unit
6	Door lock timer unit
7	Ignition switch
8	Front
9	Theft-deterrent control module

10	Theft-deterrent horn relay
11	Flasher unit
12	Sliding door lock actuator (Including lock-link switch)
13	Door key cylinder switch
14	Front door lock actuator (Including lock-link switch)
15	Door switch
16	Rear turn light
17	Liftgate lock actuator (Including cargo compartment light switch)
18	Transmitter

End Of Sta

T

SYSTEM WIRING DIAGRAM

AME812050000W03

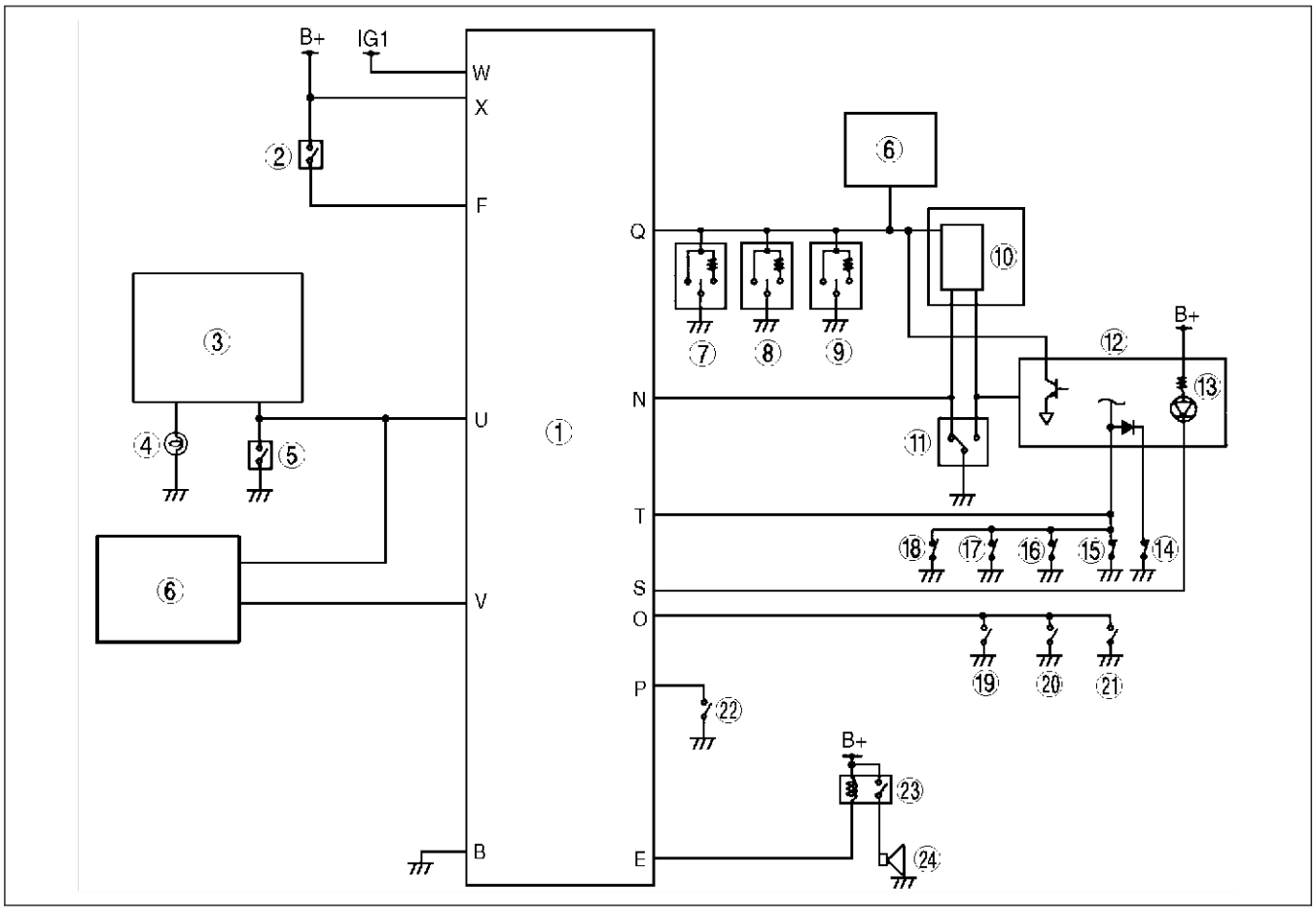

AME8120W003

1	Theft-deterrent control module
2	Key reminder switch
3	Flasher unit
4	Turn light
5	Hazard warning switch
6	Keyless unit
7	Driver's door key cylinder switch
8	Passenger's door key cylinder switch
9	Liftgate key cylinder switch
10	Door lock timer unit
11	Driver’s door lock-link switch
12	Instrument cluster

13	Security light
14	Door switch (driver’s side)
15	Door switch (passenger’s side)
16	Door switch (rear left side)
17	Door switch (rear right side)
18	Cargo compartment light switch
19	Passenger’s door lock-link switch
20	Sliding door lock-link switch (right)
21	Sliding door lock-link switch (left)
22	Bonnet switch
23	Theft-deterrent horn relay
24	Theft-deterrent horn

End Of Sie

IMMOBILIZER SYSTEM

OUTLINE

AME812267000W01

- The immobilizer system is essentially carried over from that of the previous MPV (LW) model. However, some items have been changed or added to improve security. Refer to the following table.

Comparison with previous MPV (LW) model

Item	Comparison	
	European (L.H.D. U.K.) specs. (except AJ)	Australian, European (L.H.D.) (AJ), General (L.H.D. R.H.D.) specs.
Immobilizer unit	• Key reminder switch ON/OFF signal detection function is added. • Starter relay control function is added. • System operation is changed. • The operation is the same as that of current XEDOS 9 (TA) model.	Same as the previous MPV (LW) model
Key (transponder)	Same as the previous MPV (LW) model	
Coil		
Key reminder switch	Added	—
Starter relay		
On-board diagnostic function	Procedure is changed.	Same as the previous MPV (LW) model
ID number input procedure		
Code word input procedure		

End Of Sie

STRUCTURAL VIEW

AME812267000W02

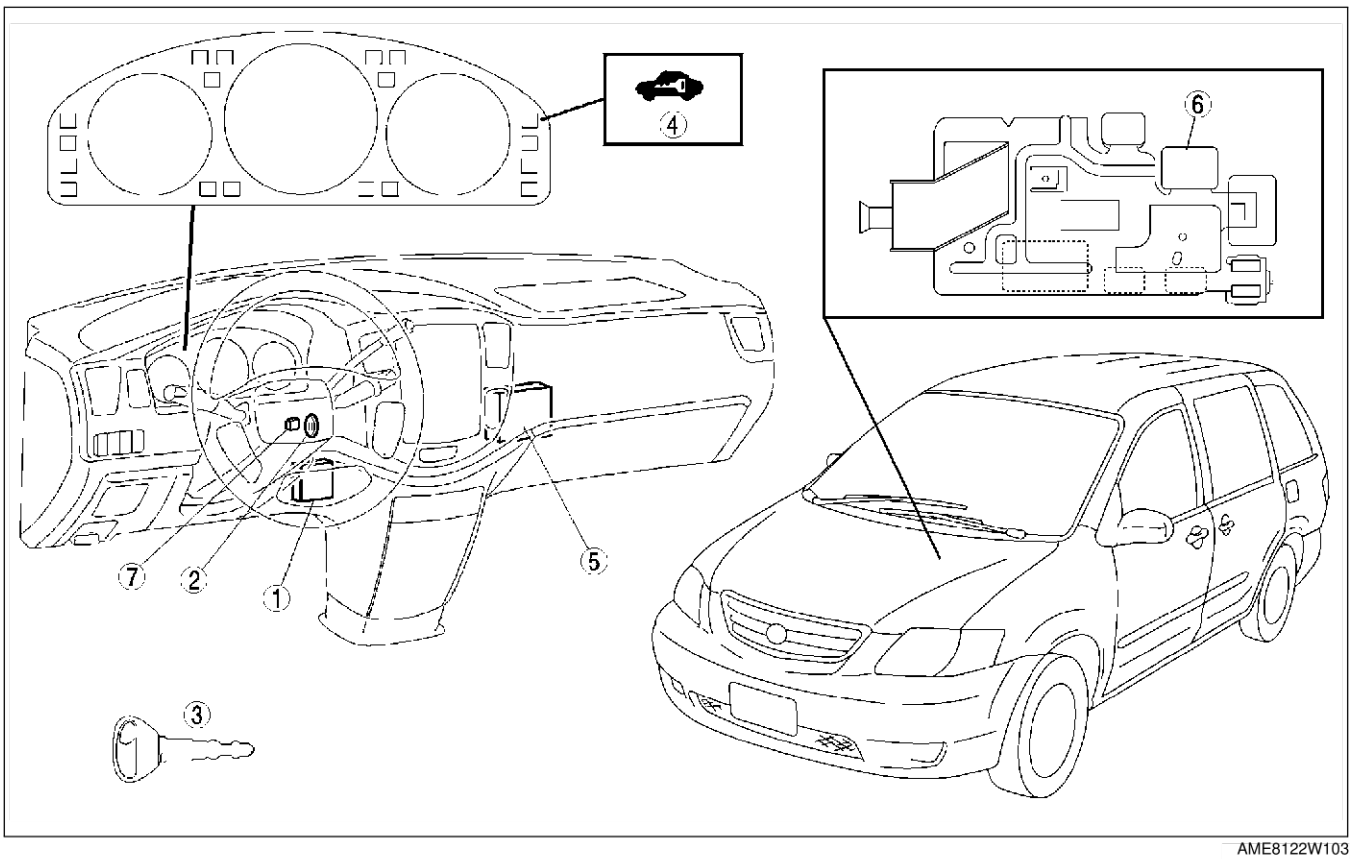

AME8122W103

1	Immobilizer unit
2	Coil
3	Key (transponder)
4	Security light

5	PCM
6	Starter relay (European (L.H.D. U.K.) specs. (except AJ))
7	Key reminder switch (European (L.H.D. U.K.) specs. (except AJ))

T

SYSTEM WIRING DIAGRAM

AME812267000W03

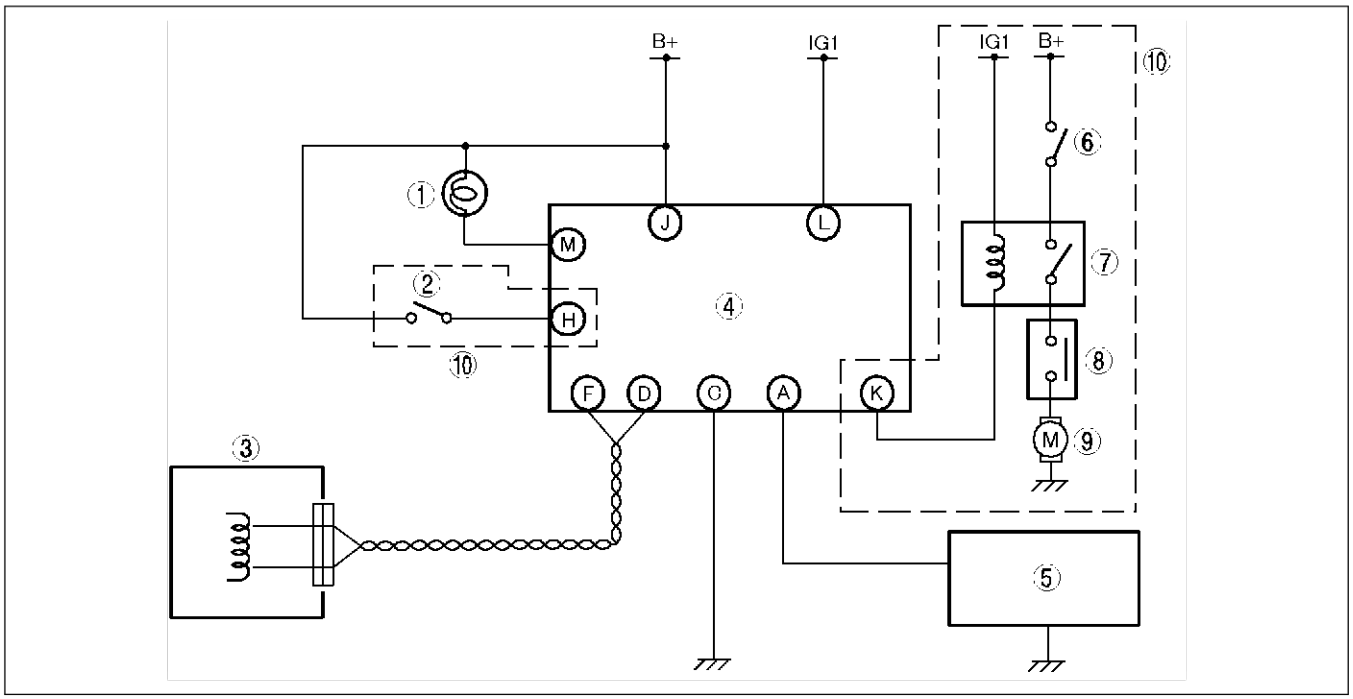

AME8122W102

1	Security light
2	Key reminder switch
3	Coil
4	Immobilizer unit
5	PCM

6	Ignition switch (Start position)
7	Starter relay
8	TR switch
9	Starter
10	European (L.H.D. U.K.) specs. (except AJ)

End Of Sie

AUDIO AND NAVIGATION SYSTEM

OUTLINE (AUDIO SYSTEM)

AME812401066W01

- The audio unit consists of the following parts:
  - — Base unit, which has AM/FM tuner and control function for each module
  - — Upper module (CD player or CD changer)
  - — Lower module (cassette deck or MD player)
  - — Cover
- The upper module (CD player or CD changer) and lower module (cassette deck or MD player) are options.
- Module availability depends on vehicle grade.
- The operation of audio unit is the same as that of current XEDOS 9, MILLENIA (TA) models.
- The audio control switch has been added to the steering wheel. (Button type or lever type)

End Of Sie

BLOCK DIAGRAM (AUDIO SYSTEM)

AME812401066W02

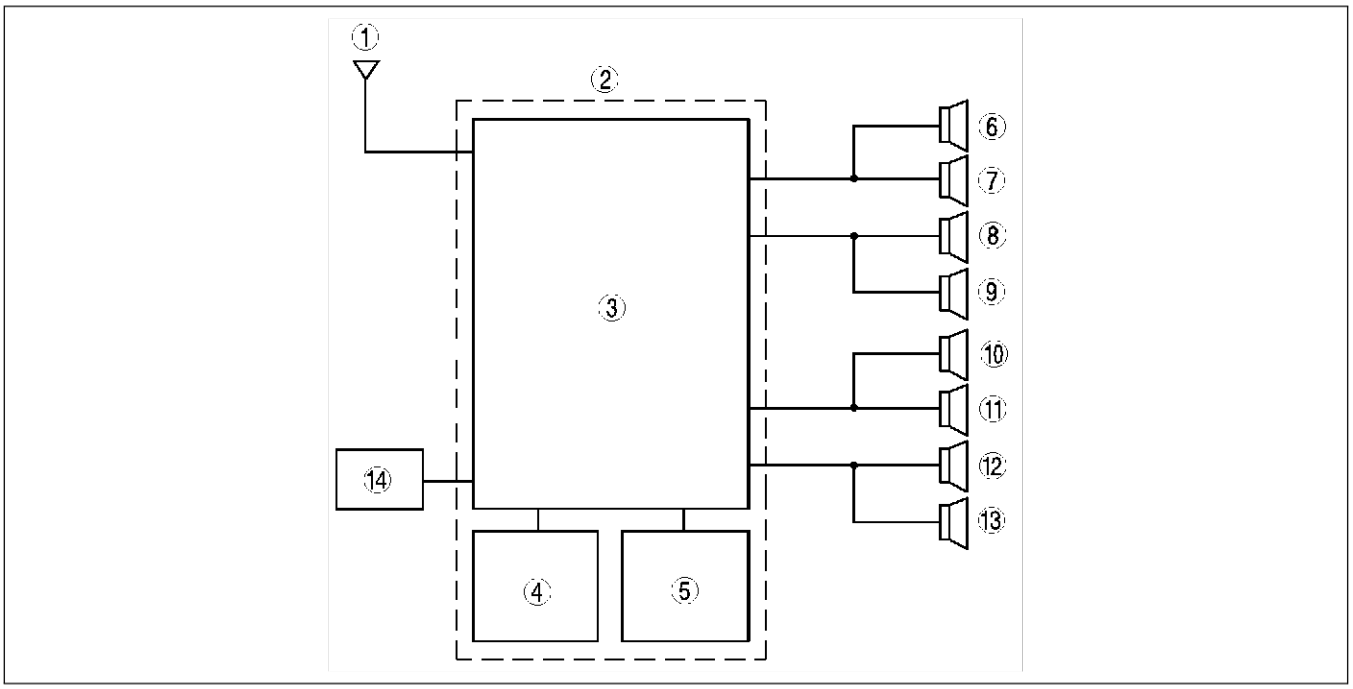

AME8124W002

1	Antenna
2	Audio unit
3	Base unit
4	Upper module
5	Lower module
6	Front tweeter (left)
7	Front door speaker (left)

8	Front door speaker (right)
9	Front tweeter (right)
10	Rear tweeter (left)
11	Rear speaker (left)
12	Rear speaker (right)
13	Rear tweeter (right)
14	Audio control switch

End Of Sie

SPECIFICATIONS (AUDIO SYSTEM)

AME812401066W03

Audio Unit

Item			Specification			
			European (L.H.D. U.K.) specs.	European (L.H.D.), General (L.H.D. R.H.D.) specs.	European (L.H.D.) specs.	Australian, General (R.H.D.) specs.
Rated voltage		(V)	12			
Frequency band	AM	(kHz)	531—1602		530—1620	522—1629
	FM	(MHz)	87.5—108.0			
Information system			RDS	—		
Audio amplifier maximum output power		(W)	25×4			
Output impedance		(ohm)	4			

Speaker

Item		Specification			
		Front door speaker	Rear speaker	Front tweeter	Rear tweeter
Maximum input	(W)	25			
Impedance	(ohm)	4			6
Lowest resonance level	(Hz)	80	60	—	
Sound pressure level	(dB)	90		78	81
Size	(in)	5.5×7.5	6×9	1.2	

End Of Sie

T

AUDIO UNIT

AME812466900W01

Structural View

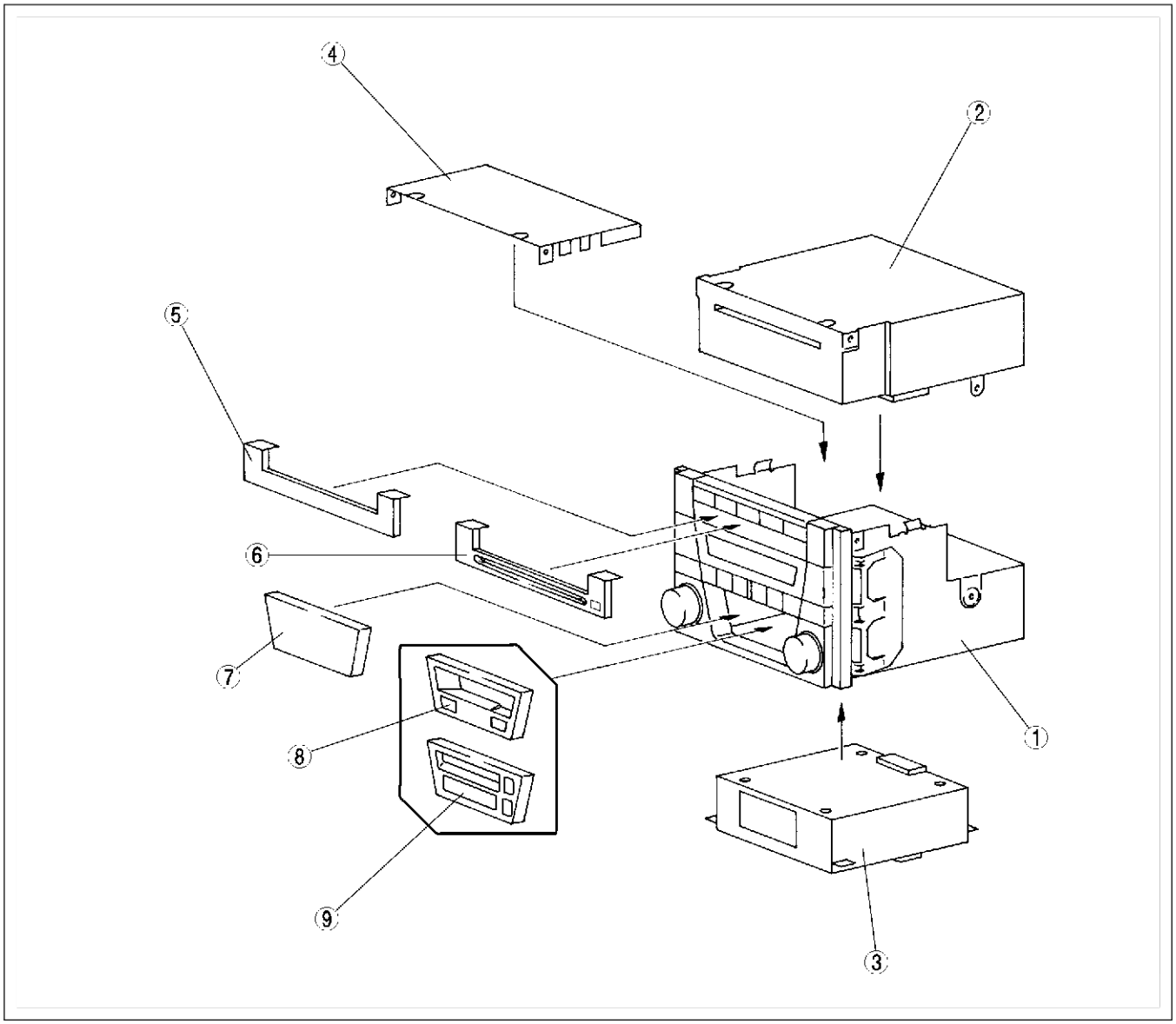

YLE8124T004

1	Base unit
2	Upper module (CD player or CD changer)
3	Lower module (cassette deck or MD player)
4	Cover (without upper module)
5	Cover (without upper module)

6	Cover (with upper module)
7	Cover (without lower module)
8	Cover (with cassette deck)
9	Cover (with MD player)

Terminal Layout and Signal

Terminal		Signal
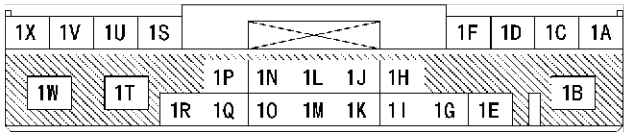	1A	Left front speaker (+)
	1B	B+ (Power back up)
	1C	Left front speaker (–)
	1D	Right front speaker (+)
	1E	Illumination (+)
	1F	Right front speaker (–)
	1G	Illumination (–)
	1H	Ant. SW
	1I	—
	1J	AMP. control
	1K	—
	1L	H/F TEL mute
	1M	—
	1N	Steering switch
	1O	—
	1P	Steering switch
	1Q	—
	1R	ACC
	1S	Left rear speaker (+)
	1T	—
	1U	Left rear speaker (–)
	1V	Right rear speaker (+)
	1W	Ground
	1X	Right rear speaker (–)
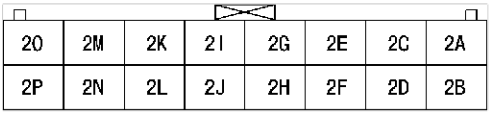	2A	Ground (power)
	2B	System mute
	2C	Right input (+)
	2D	Right input (–)
	2E	Left input (+)
	2F	Left input (–)
	2G	Signal ground
	2H	Input video
	2I	Video ground
	2J	TNS (+)
	2K	Bus (–)
	2L	Bus (+)
	2M	TV bus (+)
	2N	TV bus (–)
	2O	ACC
	2P	B+

End Of Sie

T

OUTLINE (CAR-NAVIGATION SYSTEM)

AME812466000W01

- A 2-DIN size navigation unit including audio function has been newly adopted to improve marketability.
- The construction and operation is the same as that of current XEDOS 9 (TA) model.
- An audio control switch has been added to the steering wheel. (Button type or lever type)

End Of Sie

STRUCTURAL VIEW (CAR-NAVIGATION SYSTEM)

AME812466000W02

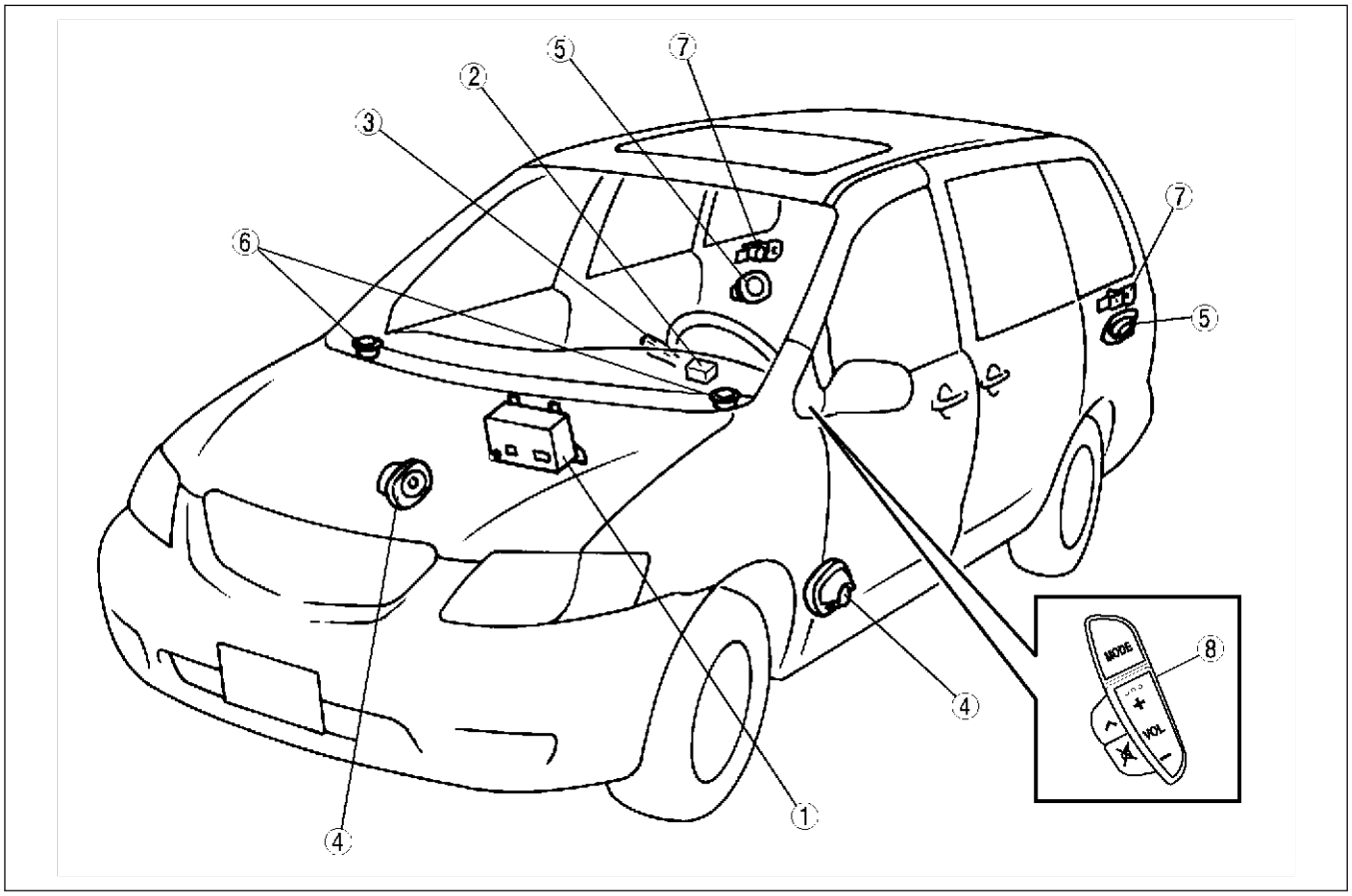

AME8124W009

1	Car-navigation unit
2	GPS antenna
3	Audio control switch (Lever type)
4	Front door speaker

5	Rear speaker
6	Front tweeter
7	Rear tweeter
8	Audio control switch (Button type)

End Of Sie

BLOCK DIAGRAM (CAR-NAVIGATION SYSTEM)

AME812466000W03

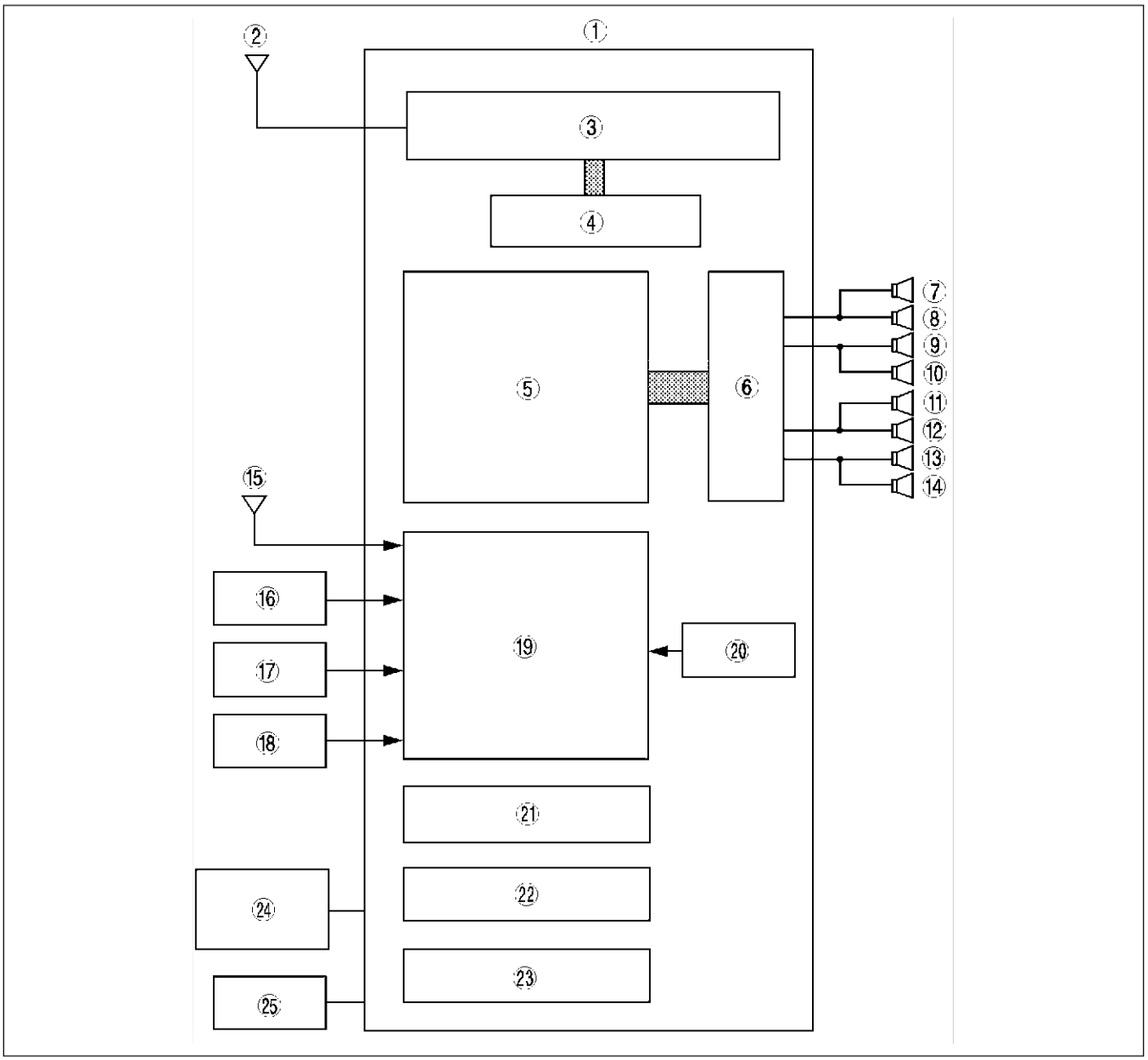

AME8124W010

1	Car-navigation unit
2	Antenna
3	Radio tuner
4	RDS receiver
5	Microcomputer (for audio function)
6	Power amplifier
7	Front tweeter (left)
8	Front door speaker (left)
9	Front door speaker (right)
10	Front tweeter (right)
11	Rear tweeter (left)
12	Rear speaker (left)
13	Rear speaker (right)

14	Rear tweeter (right)
15	GPS antenna
16	Speedometer sensor (built into microcomputer inside instrument cluster)
17	Parking brake switch
18	Back-up light switch (reverse signal)
19	Microcomputer (for navigation function)
20	Gyro sensor
21	LCD driver unit
22	Cassette tape player
23	CD player
24	CD changer (optional equipment)
25	Audio control switch

End Of Sie

SPECIFICATIONS (CAR-NAVIGATION SYSTEM)

AME812466000W04

Car-navigation Unit

Item				Specification
Rated voltage			(V)	12
Frequency band	AM	LW	(kHz)	153—279
		MW	(kHz)	531—1602
	FM		(MHz)	87.5—108
Information system				RDS
Amplifier maximum output power			(W)	25×4
Output impedance			(ohm)	4
Display	Size		(inch)	5.8
	Type			TFT (Thin Film Transistor)

Speaker

- Refer to audio system. (See T–15 SPECIFICATIONS (AUDIO SYSTEM).)

End Of Sta

CAR-NAVIGATION UNIT

AME812466902W01

Terminal Layout and Signals

Terminal		Signals
		24-pin connector
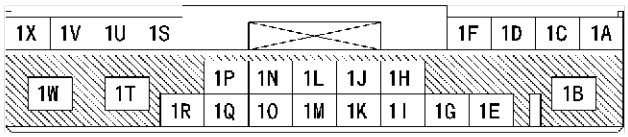	1A	Left front speaker (+)
	1B	B+ (power back up)
	1C	Left front speaker (-)
	1D	Right front speaker (+)
	1E	Illumination (+)
	1F	Right front speaker (-)
	1G	Illumination (-)
	1H	Ant. Cont.
	1I	Vehicle speed
	1J	Amp. Cont.
	1K	Parking brake switch
	1L	–
	1M	R range
	1N	Steering SW1
	1O	–
	1P	Steering SW2
	1Q	–
	1R	ACC
	1S	Left rear speaker (+)
	1T	–
	1U	Left rear speaker (-)
	1V	Right rear speaker (+)
	1W	Ground
	1X	Right rear speaker (-)

Terminal		Signals
		13-pin connector
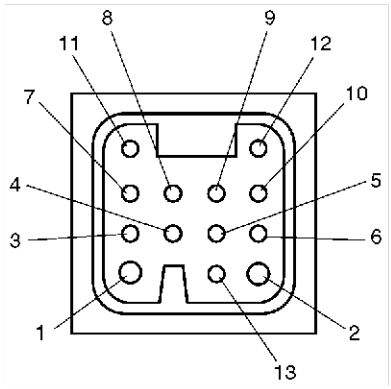	1	Ground
	2	B+ (power back up)
	3	Left input (+)
	4	–
	5	–
	6	Bus (+)
	7	Right input (+)
	8	Right input (-)
	9	ACC
	10	Bus (-)
	11	Left input (-)
	12	Illumination
	13	–

End Of Sie

CRUISE CONTROL SYSTEM

OUTLINE

AME812801011W01

- The cruise control system is composed of the following parts:
  - — Cruise actuator
  - — Actuator cable
  - — Cruise control switch
  - — Brake switch
  - — TR switch
  - — ABS/TCS HU/CM (with ABS and TCS)
  - — ABS HU/CM (with ABS, without TCS)
  - — Cruise set indicator light
- The construction and operation of the cruise control system is essentially carried over from that of the previous MPV (LW) model except for the following:
  - — A cruise actuator with built-in control module has been adopted.
  - — The on-board diagnostic function has been changed.

End Of Sie

STRUCTURAL VIEW

AME812801011W02

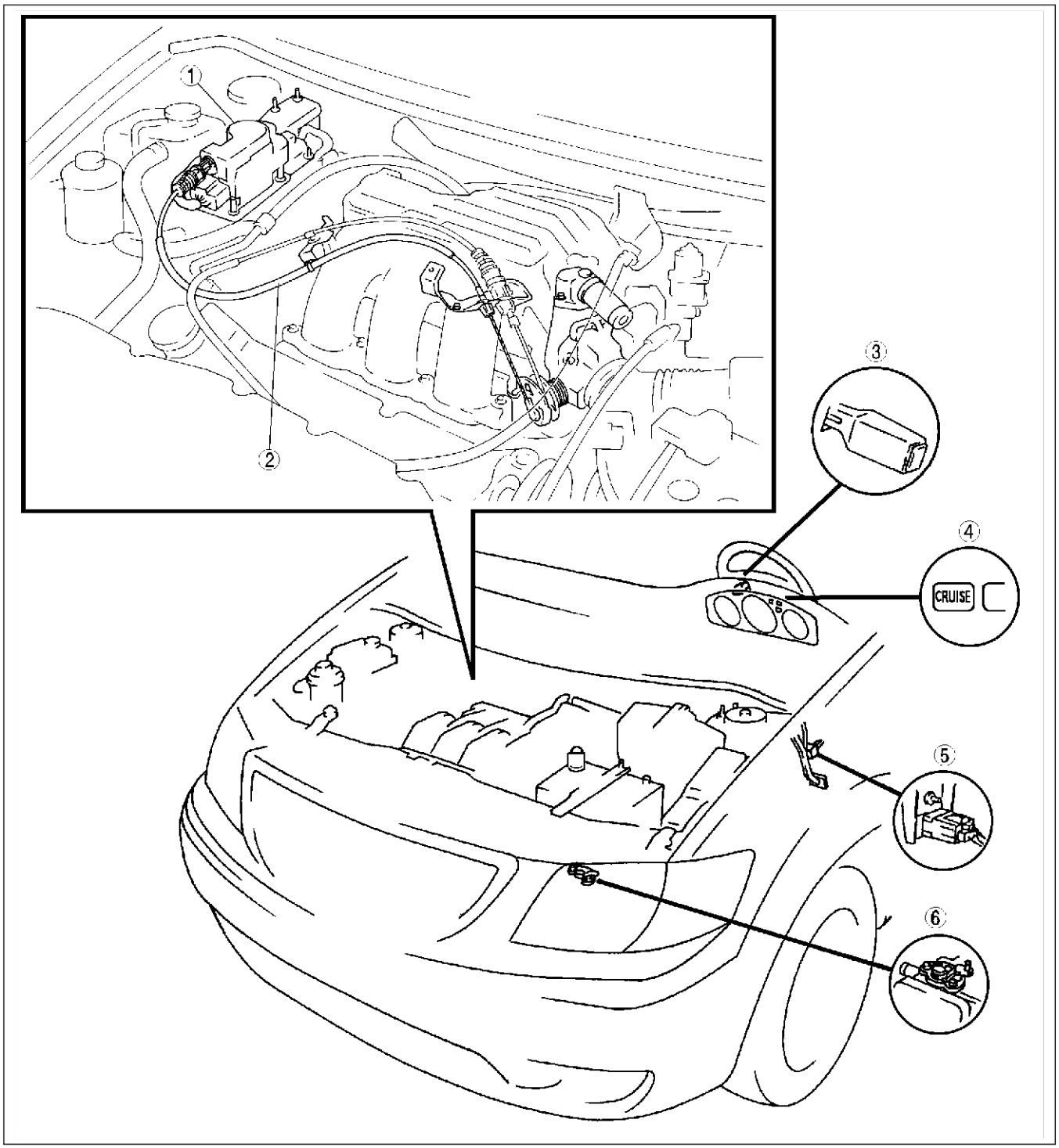

AME8128W101

1	Cruise actuator
2	Actuator cable
3	Cruise control switch

4	Cruise set indicator light
5	Brake switch
6	TR switch

End Of Sto

SYSTEM WIRING DIAGRAM

AME812801011W03

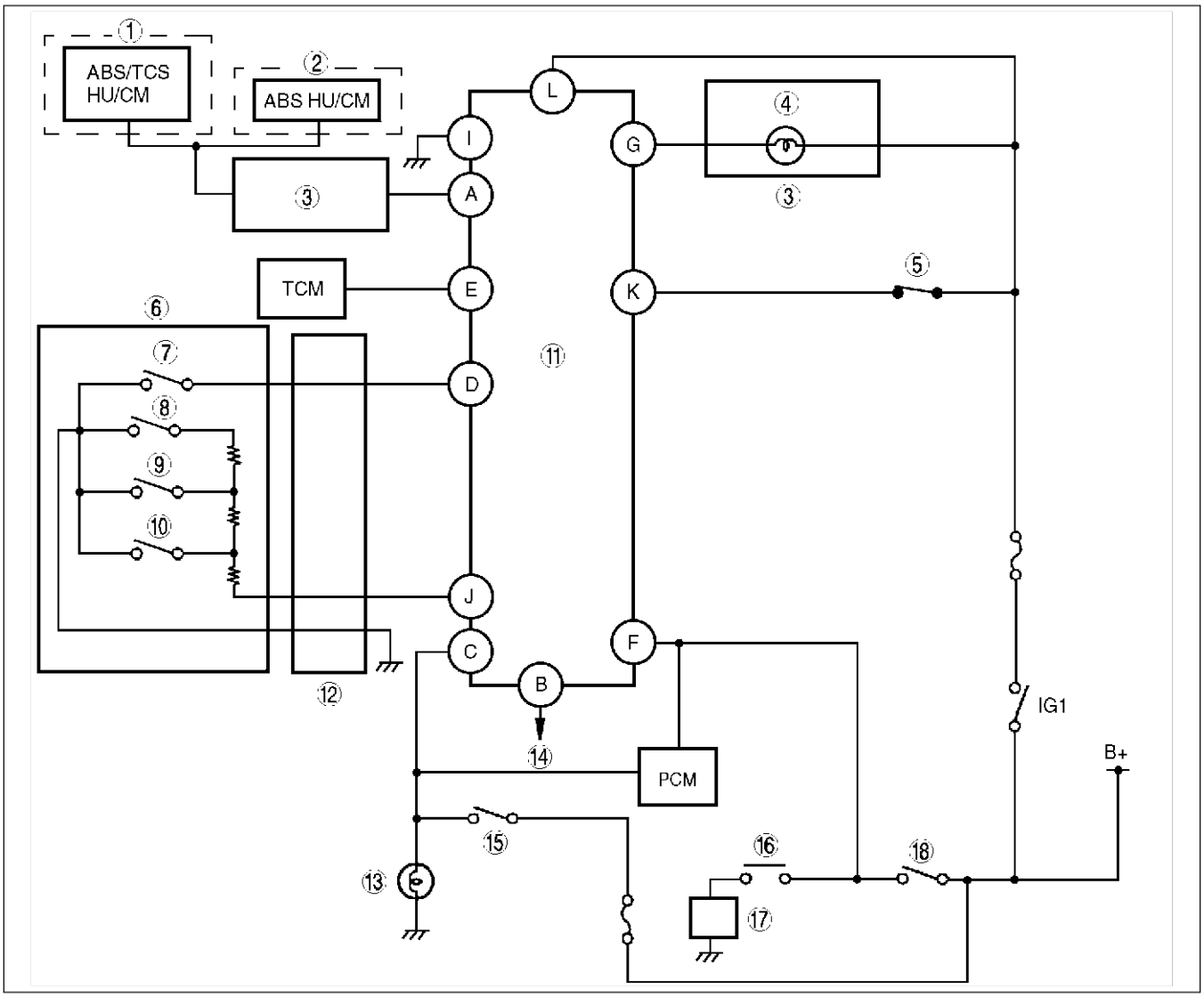

AME8128W401

1	With ABS and TCS
2	With ABS, without TCS
3	Instrument cluster
4	Cruise set indicator light
5	Brake switch 2
6	Cruise control switch
7	Cruise control main switch
8	Cancel switch
9	SET/COAST switch

10	RESUME/ACCEL switch
11	Cruise actuator (Includes control module)
12	Clock spring
13	Brake light
14	To DLC (Terminal FSC)
15	Brake switch
16	TR switch (N or P position)
17	Starter
18	Ignition switch (ST position)

End Of Sta

T

CRUISE ACTUATOR

AME812801011W04

- A cruise actuator with a built-in control module has been adopted. With the integration of the cruise actuator and control module, component structure has been simplified and serviceability has been improved.
- A motor-type system has been adopted for the operating structure of the actuator cable. In comparison to the previous vacuum-type system, system control is more exact and smooth.
- Regarding operation of the cruise control system controlled by the control module (in cruise actuator), there are no changes from the previous MPV (LW) model.

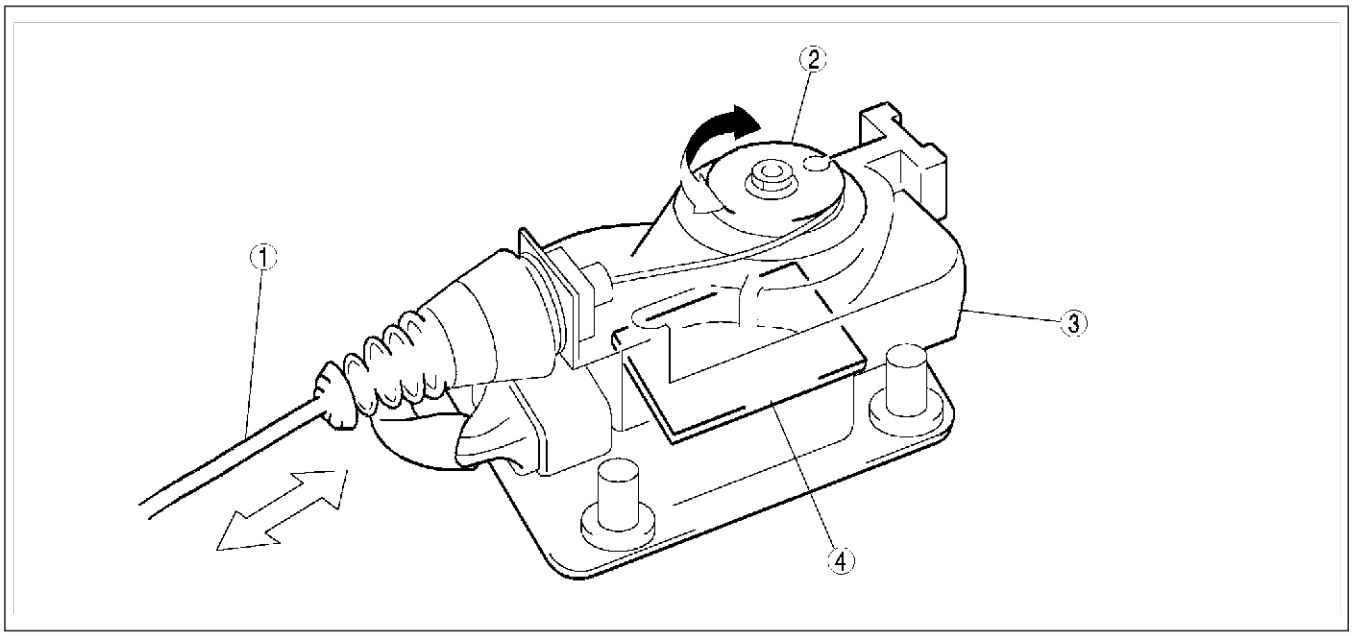

AME8128W216

1	Actuator cable	3	Cruise actuator
2	Plate	4	Control module

End Of Sie

ON-BOARD DIAGNOSTIC

AME812801011W05

- Due to the integration of the control module in the cruise actuator, the circuit between the cruise actuator and control module is obsolete. As a result, the procedure for DTC 01 has been changed.
- As the control module is installed in the engine compartment, a waterproof connector is used. As a result, the terminal voltage measurement method for the control module (in cruise actuator) with the on-board diagnostic has been changed. For details, see the workshop manual.

Operation code list

DTC	Output pattern	Diagnosed circuit	
		New MPV	Previous MPV (LW) model
21		Cruise control switch (SET/COAST switch)	
22		Cruise control switch (RESUME/ACCEL switch)	
31	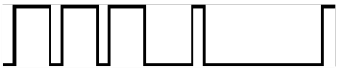	Brake switch	
35		Transaxle range switch	
37	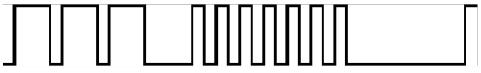	Vehicle speed sensor	

Condition code list

DTC	Output pattern	Diagnosed circuit	
		New MPV	Previous MPV (LW) model
01		Cruise actuator (Drive circuit)	Cruise actuator
05	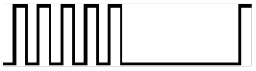	Brake switch	
07		Brake switch Brake switch 2	
11	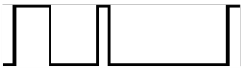	Cruise control switch (SET/COAST switch)	
12		Cruise control switch (RESUME/ACCEL switch)	
13		Cruise control switch (Ground circuit)	
15		Cruise actuator (Control circuit)	Cruise control module

Bold frames: New specifications

End Of Ste

T

OUTLINE

SUPPLEMENTAL SERVICE INFORMATION

AME810201088W03

- The additions and modifications have been made since publication of the below manuals, as follows.
  - — Mazda MPV Workshop Manual (1666-1*-99F)
  - — Mazda MPV Workshop Manual Supplement (1700-1*-00H)

Relay
- Inspection procedure has been modified.

Headlight
- Removal/Installation procedure has been modified.
- Aiming procedure has been modified.

Parking light bulb
- Removal/Installation procedure has been modified.

Front fog light
- Removal/Installation procedure has been modified.
- Aiming procedure has been modified.
- Bulb Removal/Installation procedure has been modified.

Rear combination light
- Removal/Installation procedure has been modified.

Flasher unit
- Removal/Installation procedure has been modified.
- Inspection procedure has been modified.

Windshield wiper motor
- Removal/Installation procedure has been modified.

Instrument cluster
- Input/output check mode procedure has been modified.

Fuel gauge sender unit
- Inspection procedure has been modified.

Theft-deterrent control module
- Inspection procedure has been modified.

Immobilizer unit
- Inspection procedure has been modified.
- Immobilizer system reprogram procedure has been modified.
- Cord ward input procedure has been modified.

Audio unit
- Anti-theft system procedure has been modified.

Upper module
- Removal/Installation procedure has been added.

Lower module
- Removal/Installation procedure has been added.

Car-navigation unit
- Anti-theft system procedure has been added.

GPS antenna
- Removal/Installation procedure has been added.

Audio control switch
- Removal/Installation procedure has been added.
- Inspection procedure has been added.

Cruise actuator
- Removal/Installation procedure has been modified.
- Inspection procedure has been modified.

Actuator cable
- Removal procedure has been modified.
- Installation procedure has been modified.

Cruise control switch
- Removal/Installation procedure has been modified.
- Inspection procedure has been modified.

Clock spring
- Inspection procedure has been modified.

On-board diagnostic
- Immobilizer system procedure has been modified.
- Audio system procedure has been added.
- Car-navigation system procedure has been added.

Troubleshooting
- Car-navigation system procedure has been added.
- Air bag system procedure has been modified.

POWER SYSTEM

RELAY LOCATION

AME811067730W01

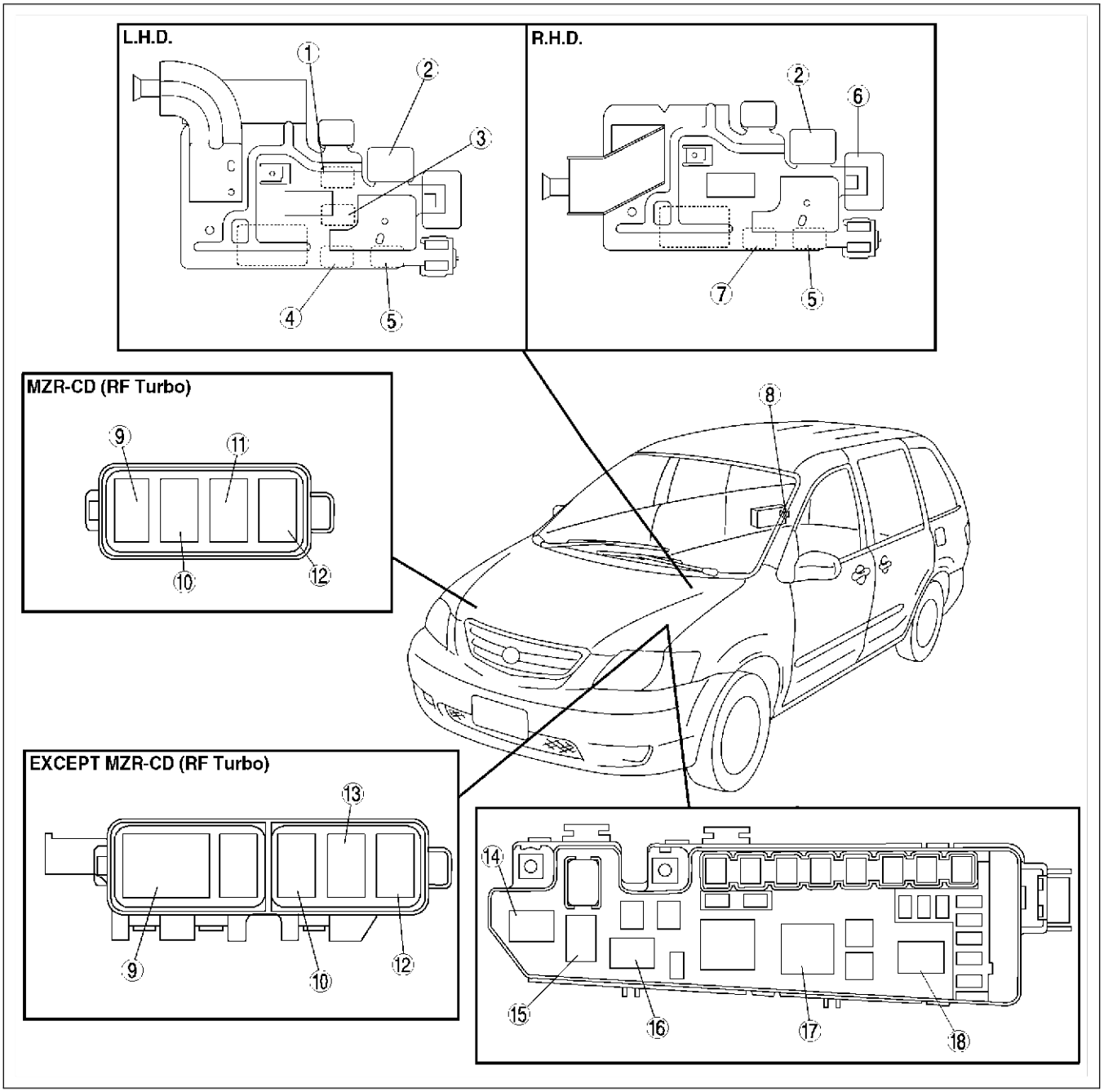

AME8110W102

1	Headlight cleaner relay
2	Starter relay (European (L.H.D. U.K.) specs. (except AJ))
3	Rear fog light relay (European (L.H.D.) specs.)
4	Shift-lock relay
5	Front blower relay
6	Theft-deterrent horn relay
7	Rear fog light relay (U.K. specs.)
	Shift-lock relay (Australian, General (R.H.D.) specs.)
8	Rear blower relay

9	Rear window defroster relay
10	A/C relay
11	Glow plug relay
12	Front fog light relay
13	Horn relay
14	Main relay (L3, AJ)
	PCM control relay (MZR-CD (RF Turbo))
15	Fuel pump relay (L3, AJ)
16	Headlight relay
17	Cooling fan relay
18	TNS relay

T

RELAY INSPECTION

AME811067730W02

Relay Type

Terminal type		Part name
Four-terminal	Type A	• Main relay • PCM control relay • Fuel pump relay • Shift-lock relay • A/C relay • Front blower relay • Front fog light relay • TNS relay • Headlight relay • Horn relay • Starter relay • Headlight cleaner relay • Rear fog light relay
	Type B	• Cooling fan relay • Rear window defroster relay • Glow plug relay
	Type C	• Rear blower relay
	Type D	• Theft-deterrent horn relay

Four-terminal

Type A

1. Inspect for continuity between the relay terminals using an ohmmeter.
   - If not as specified, replace the relay.

○—○ : Continuity

Step	Terminal			
	A	E	C	D
1	○	○		
2	B+	GND	○	○

Z5U914WAK

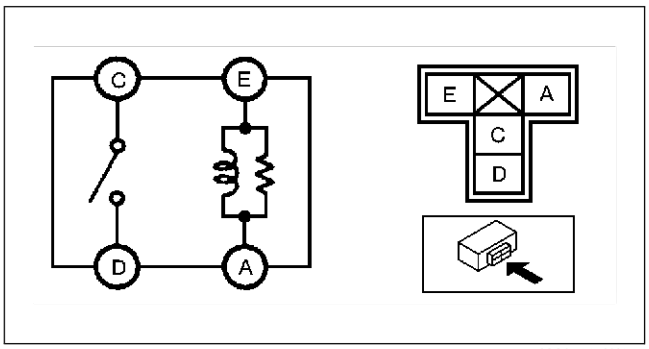

AMJ8110W103

Type B

1. Inspect for continuity between the relay terminals using an ohmmeter.
   - If not as specified, replace the relay.

○—○ : Continuity

Step	Terminal			
	A	E	C	D
1	○	○		
2	B+	GND	○	○

Z5U914WAK

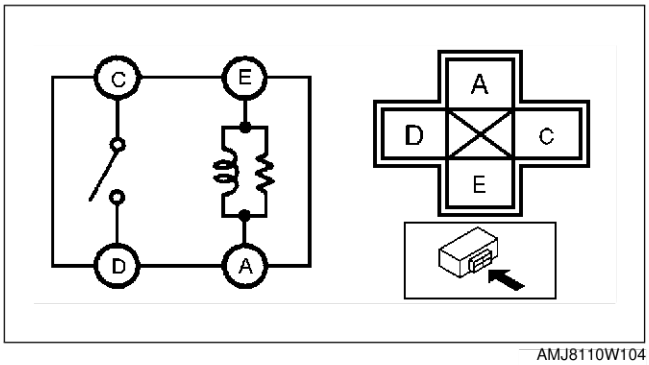

AMJ8110W104

Type C

1. Inspect for continuity between the relay terminals using an ohmmeter.
   - If not as specified, replace the relay.

○—○ : Continuity

Step	Terminal			
	A	B	C	D
1	○	○		
2	B+	GND	○	○

YMU740WB5

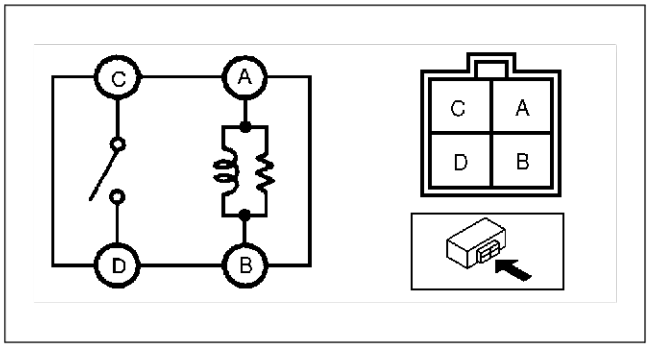

AMJ8110W105

Type D

1. Inspect for continuity between the relay terminals using an ohmmeter.
   - If not as specified, replace the relay.

○—○ : Continuity

Step	Terminal			
	A	B	C	D
1	○	○		
2	B+	GND	○	○

YMU740WB5

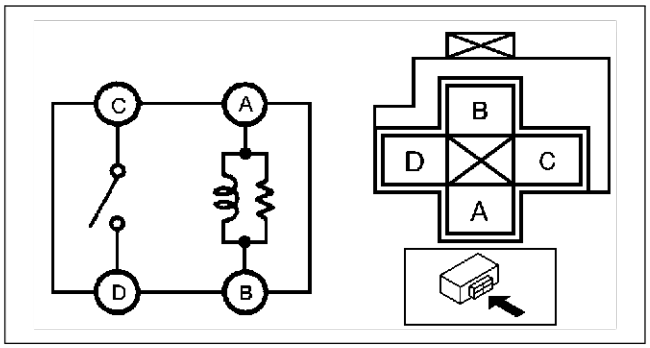

AME8110W001

End Of Ste

T

EXTERIOR LIGHTING SYSTEM

HEADLIGHT REMOVAL/INSTALLATION

AME811251030W01

1. Disconnect the negative battery cable.
2. Remove the front combination light.
3. Remove the front bumper. (See S–23 FRONT BUMPER REMOVAL/INSTALLATION.)
4. Remove in the order indicated in the table.

1	Connector
2	Bolt
3	Bracket
4	Headlight

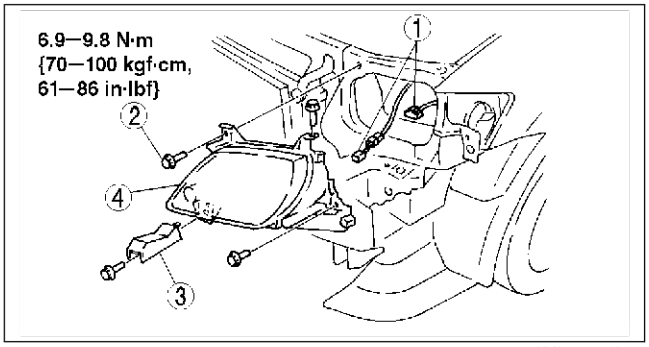

AMU0918W102

5. Install in the reverse order of removal.
6. Adjust the headlight aiming. (See T–30 HEADLIGHT AIMING.)

End Of Sec

HEADLIGHT AIMING

AME811251030W02

1. Adjust the tire air pressure to the specification.
2. Position the unloaded vehicle on a flat, level surface.
3. Seat one person in the driver's seat.
4. Position the vehicle straight ahead and perpendicularly to a wall.
5. Set the headlights **3 m {10 ft}** from the wall.
6. While adjusting one headlight, disconnect the connector of the other.
7. Start the engine to charge the battery.

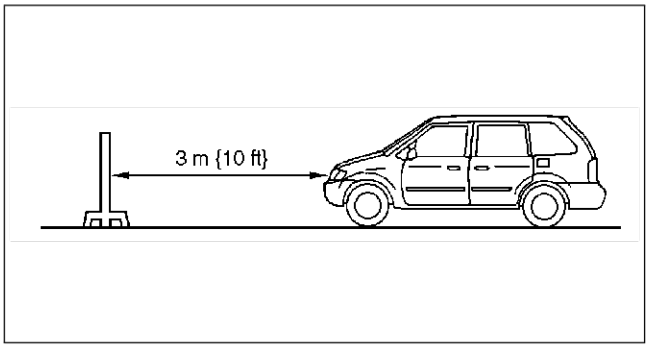

AMU0918W101

8. Adjust the headlights by turning the adjusting screws as shown in the figure. Loosen the screws first, then tighten them.

Note

- If the adjusting screws are tightened first, then loosened, they will continue to loosen when the vehicle is in motion and may cause the headlights to become misaligned.

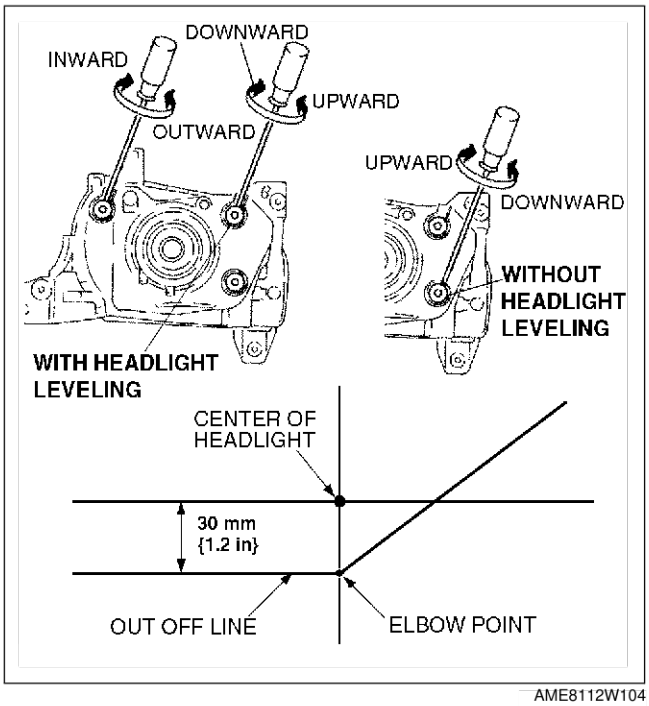

AME8112W104

PARKING LIGHT BULB REMOVAL/INSTALLATION

AME811251040W01

1. Disconnect the negative battery cable.
2. Remove in the order indicated in the table.

1	Socket (See T–31 Socket Removal Note (Left Side Only))
2	Parking light bulb
3	Connector cover
4	Connector

3. Install in the reverse order of removal.

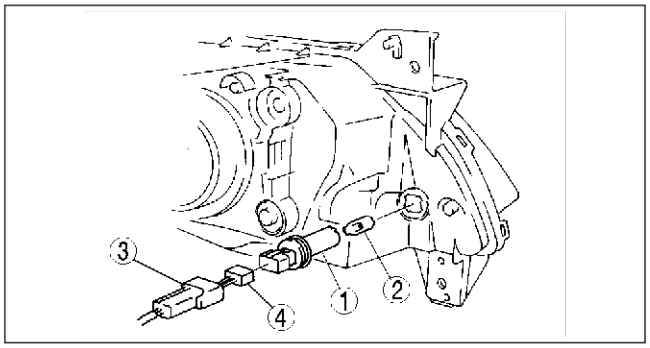

AMU0918W106

Socket Removal Note (Left Side Only)

1. Remove the battery.
2. Remove the main fuse block cover. (MZR-CD (RF Turbo))
3. Remove the fresh-air duct installation bolt.
4. Slide the fresh-air duct to the right, and ensure space for the socket removal.

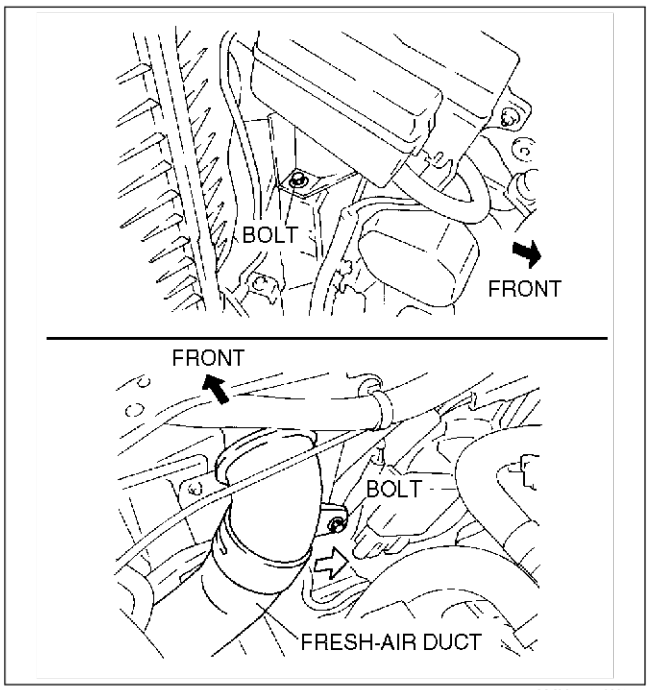

AMU0918W107

End Of Sta

FRONT FOG LIGHT REMOVAL/INSTALLATION

AME811251680W01

1. Disconnect the negative battery cable.
2. Remove the mud guard.
3. Remove in the order indicated in the table.

1	Connector
2	Screw
3	Front fog light

4. Install in the reverse order of removal.
5. Adjust the front fog light aiming. (See T–32 FRONT FOG LIGHT AIMING.)

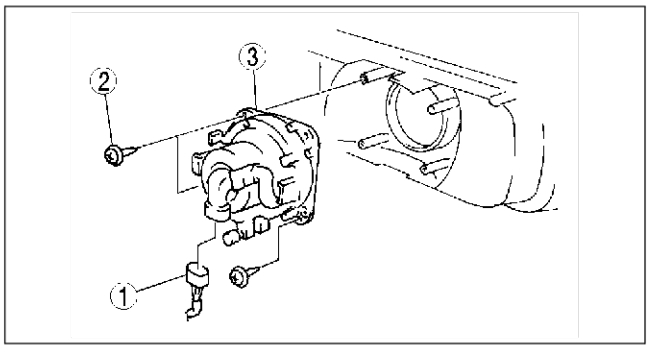

AMU0918W113

End Of Sta

T

FRONT FOG LIGHT AIMING

AME811251680W02

1. Adjust the tire air pressure to the specification.
2. Position the unloaded vehicle on a flat, level surface.
3. Seat one person in the driver's seat.
4. Position the vehicle **3 m {10 ft}** in front of a white screen.
5. While adjusting one fog light, mask the other.
6. Start the engine to charge the battery.
7. Turn the front fog light on.

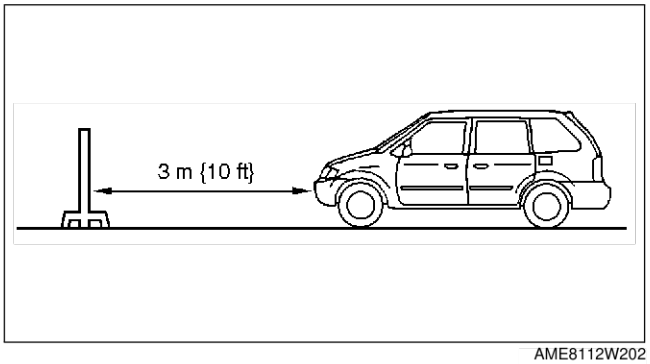

AME8112W202

8. Adjust the brightness border line by turning the adjusting bolts as shown in the figure. Loosen the bolts first, then tighten them.

Note

- If the adjusting bolts are tightened first, then loosened, they will continue to loosen when the vehicle is in motion and may cause the front fog lights to become misaligned.

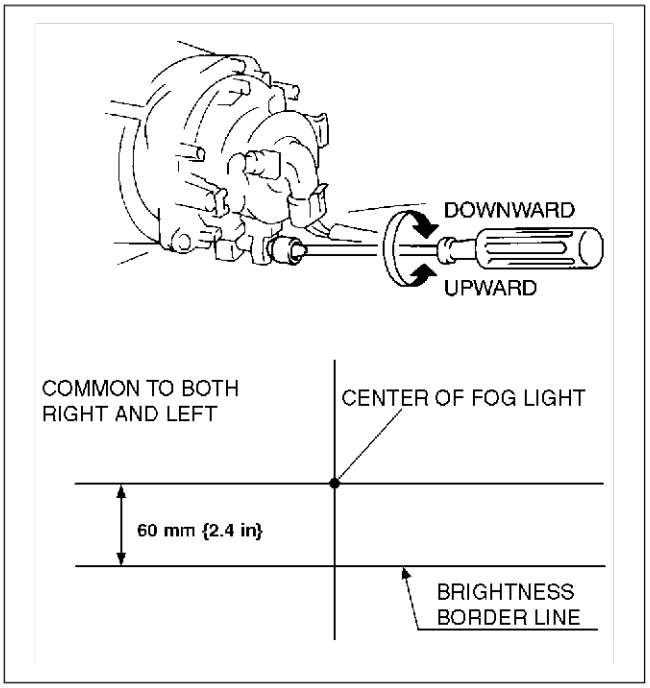

AMU0918W114

End Of Sie

FRONT FOG LIGHT BULB REMOVAL/INSTALLATION

AME811251680W03

Caution

- **A halogen bulb generates extremely high heat when it is used. If the surface of the bulb is soiled, excessive heat will build up and the light's life will be shortened. When replacing the bulb, hold the metal flange, not the glass.**

1. Disconnect the negative battery cable.
2. Remove the mud guard.
3. Remove in the order indicated in the table.

1	Connector
2	Front fog light bulb (See T–33 Front Fog Light Bulb Removal Note)

4. Install in the reverse order of removal.

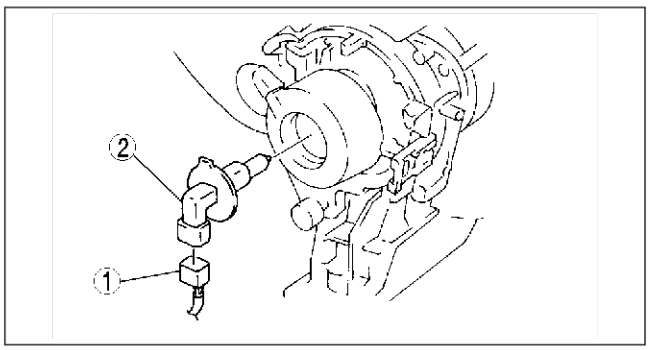

AMU0918W115

Front Fog Light Bulb Removal Note

1. Turn the front fog light bulb to the arrow mark and remove it.

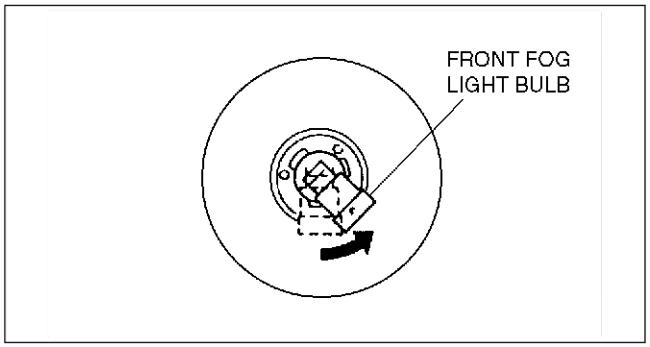

AMU0918W116

End Of Ste

REAR COMBINATION LIGHT REMOVAL/INSTALLATION

AME811251150W01

1. Disconnect the negative battery cable.
2. Remove the trunk side trim. (Right side only) (See S–28 TRUNK SIDE TRIM REMOVAL/INSTALLATION.)
3. Remove in the order indicated in the table.

1	Connector
2	Screw
3	Rear combination light (See T–34 Rear Combination Light Removal Note)
4	Socket (See T–34 Socket Installation Note)
5	Brake light/taillight bulb
6	Rear turn light bulb
7	Back-up light bulb
8	Rear fog light bulb (driver's side only) (European (L.H.D. U.K.) specs.)
	Taillight bulb (General (R.H.D.) specs.)

4. Install in the reverse order of removal.

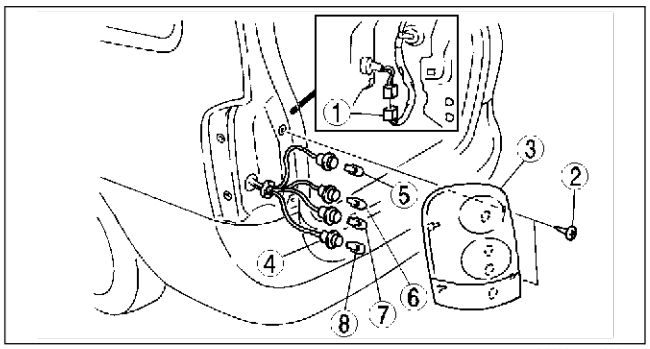

AMU0918W110

T

Rear Combination Light Removal Note

1. Slide the rear combination light outward from the vehicle and disengage the attachment pins.

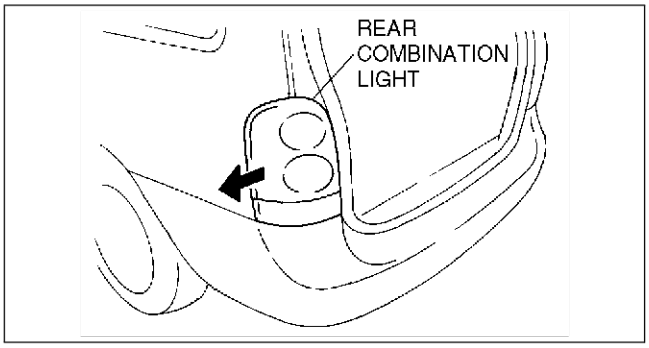

AMU0918W111

Socket Installation Note

1. Hook the harness as shown in the figure.

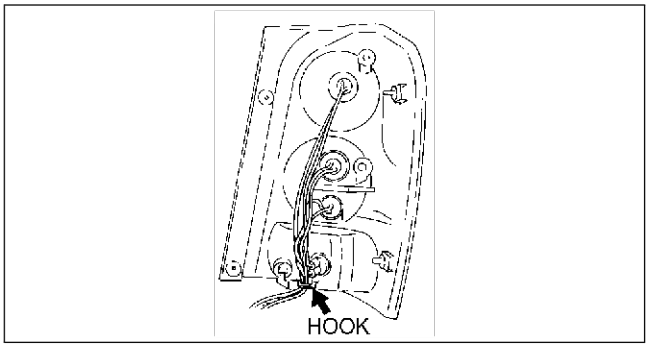

AMU0918W112

End Of Sie

FLASHER UNIT REMOVAL/INSTALLATION

AME811266830W01

Note

- Because the lock section of the unit is damaged easily, do not remove the unit from the bracket unless replacement is necessary. Always perform an inspection of the flasher unit before removal.

1. Disconnect the negative battery cable.
2. Remove the bracket.
3. Disconnect the flasher unit connector.
4. Remove the flasher unit by prying the lock section of the upper part with a flathead screwdriver.
5. Install in the reverse order of removal.

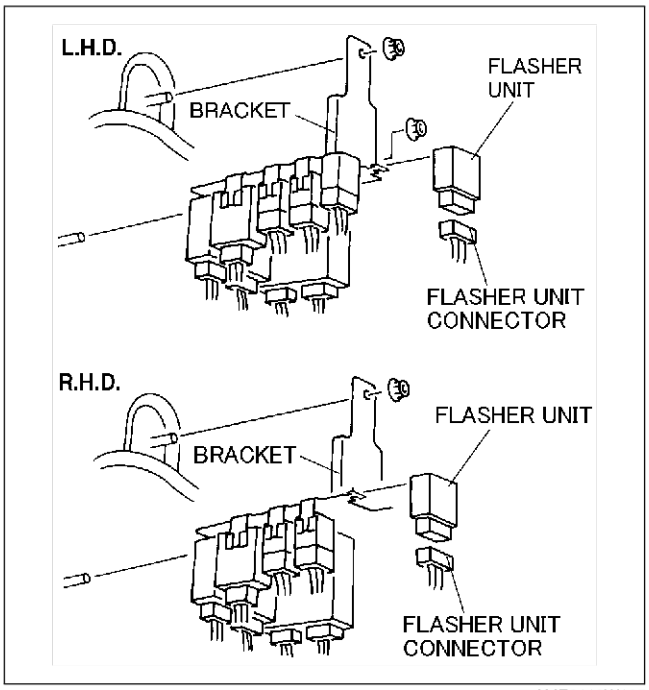

AME8112W105

End Of Sie

FLASHER UNIT INSPECTION

AME811266830W02

1. Remove the bracket and pull it toward you.
2. Measure the voltage at the flasher unit terminals as indicated below.
3. Disconnect the flasher unit connector before inspecting for continuity at terminal F.
   - If not as specified, inspect the parts listed under “Action.”
   - If the parts and wiring harnesses are okay but the system still does not work properly, replace the flasher unit.

Terminal Voltage Table (Reference)

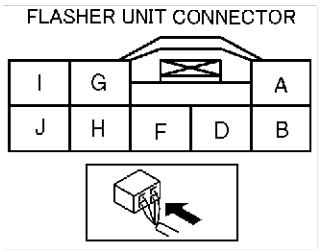

AME8112W101

Terminal	Signal	Connected to	Test condition		Voltage (V)/ Continuity	Action
A	Power supply	HAZARD 10 A fuse	Under any condition		B+	• Inspect HAZARD 10 A fuse • Inspect related harness
B	—	—	—		—	—
D	Turn signal light (LH) flashing	Turn signal light (LH)	Ignition switch at ON position	Turn switch (LH) on	Alternates between below 1.0 and B+	• Inspect turn signal light (LH) • Inspect light switch • Inspect related harness
				Turn switch (LH) off	Below 1.0	
F	Flasher unit ground	GND	Under any condition: inspect for continuity to ground		Yes	• Inspect GND
G	Turn signal light (RH) flashing	Turn signal light (RH)	Ignition switch at ON position	Turn switch (RH) on	Alternates between below 1.0 and B+	• Inspect turn signal light (RH) • Inspect light switch • Inspect related harness
				Turn switch (RH) off	Below 1.0	
H	Hazard warning switch on	Hazard warning switch	Hazard warning switch on		Below 1.0	• Inspect hazard warning switch • Inspect related harness
			Other		B+	
I	Turn switch (RH) on/off	Light switch	Ignition switch at ON position and turn switch (RH) on		B+	• Inspect light switch • Inspect related harness
			Other		Below 1.0	
J	Turn switch (LH) on/off	Light switch	Ignition switch at ON position and turn switch (LH) on		B+	• Inspect light switch • Inspect related harness
			Other		Below 1.0	

End Of Ste

T

WIPER AND WASHER

WINDSHIELD WIPER MOTOR REMOVAL/INSTALLATION

AME811667340W01

1. Disconnect the negative battery cable.
2. Remove the windshield wiper arm and blade.
3. Remove the cowl grille.
4. Pry off the connection between the windshield wiper motor and windshield wiper link.
5. Remove in the order indicated in the table.

1	Connector
2	Bolt
3	Windshield wiper motor
4	Nut
5	Hose
6	Bolt
7	Link and frame

6. Install in the reverse order of removal.
7. Adjust the windshield wiper arm and blade.

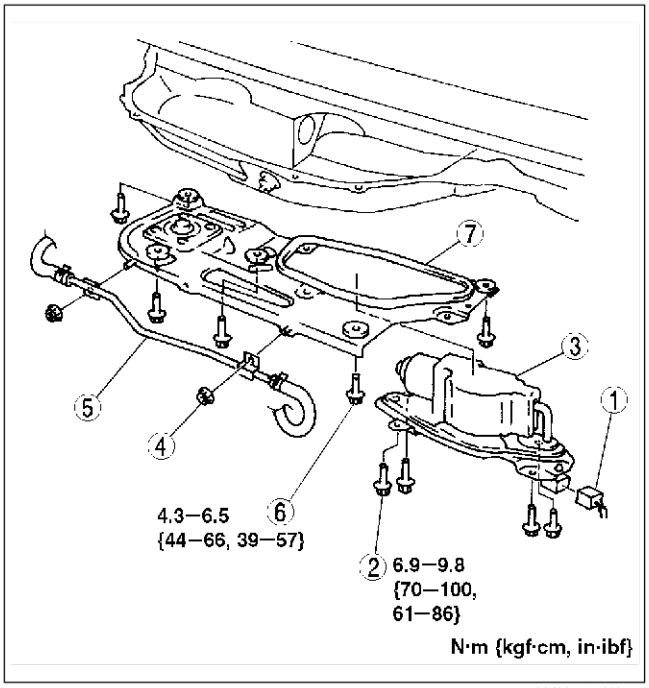

AMU0919W110

End Of Ste

WARNING AND INDICATOR SYSTEM

INSTRUMENT CLUSTER INPUT/OUTPUT CHECK MODE

AME811855430W01

Note
- In this mode, it is possible to check the items in the following chart.

Diagnostic Trouble Code Chart

DTC	Checked item	Related item
01	Buckle switch	Buckle switch
04	Door switch	• Ignition key illumination • Key reminder warning buzzer • Interior light control • Power door lock system • Lights-on reminder warning buzzer
05	Door lock-link switch	• Interior light control • Power door lock system
07	Rear window defroster switch	Rear window defroster switch
08	TNS relay	• Lights-on reminder warning buzzer • Each illumination
09	Headlight switch	• Headlight • Rear fog light control system
10	• ABS/TCS HU/CM (With ABS and TCS) • ABS HU/CM (With ABS, Without TCS)	Speedometer
11	PCM	Tachometer
12	Speedometer	Speedometer
13	Tachometer	Tachometer
14	Buzzer	Lights-on reminder warning buzzer
15	Rear fog light relay	Rear fog light indicator light
16	Fuel-level warning light	Fuel-level warning light
17	Rear window defroster indicator light	Rear window defroster
18	Ignition key illumination	Ignition key cylinder illumination
20	Rear window defroster relay	Rear window defroster
21	Door lock timer unit	• Theft-deterrent system • Power door lock system
22	Fuel gauge sender unit	Fuel gauge
23	Fuel gauge	Fuel gauge
24	PCM (Water temperature sender unit)	Water temperature gauge
25	Water temperature gauge	Water temperature gauge
26	LCD	LCD
27	Interior light	Interior light control
29	Rear fog light switch	Rear fog light control system
31	Key reminder switch	Key reminder warning buzzer
40	Front fog light relay	Front fog light relay
41	P position switch	Shift-lock system
42	• Key interlock solenoid • Key interlock resistor	Key interlock system

Note
- Diagnostic trouble codes which are not listed may be indicated, but they cannot be inspected.
- The diagnostic trouble codes are displayed in numerical order. (While performing the inspection, if you want to inspect a diagnostic trouble code of which the number is smaller than the code number you are currently inspecting, terminate the check mode then repeat the inspection from the beginning.)
- If the speed signal is put into the instrument cluster (the front wheels are rotated) while a code other than DTC 10 is displayed, the input/output check mode will be cancelled.
- The diagnostic trouble codes can be fast-forwarded by pushing and holding the odometer/tripmeter switch for **1 second or more**.

Operating Order

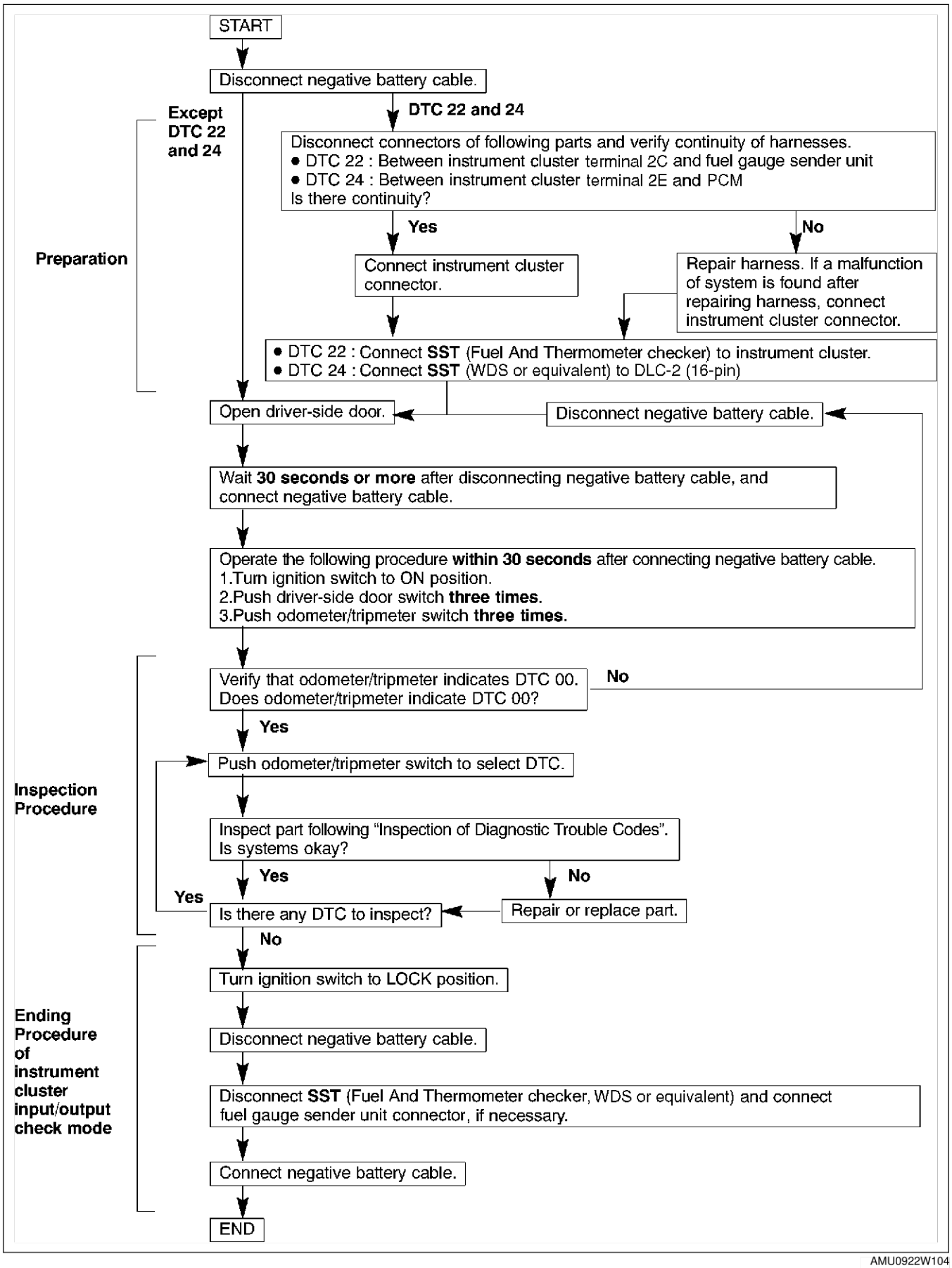

AMU0922W104

Checking Order

Note

- When inspecting more than two DTCs, perform the inspection by following the priority order of inspection indicated in the chart below.

Priority order of inspection	IG switch position	Check code
1	ON	22, 24
2		01, 04, 05, 07, 08, 09, 10, 11, 12, 13, 14, 15, 16, 17, 18, 20, 21, 23, 25, 26, 27, 29, 40, 41, 42
3	LOCK	31

Inspection of Diagnostic Trouble Codes

DTC 01	Buckle switch on/off signal

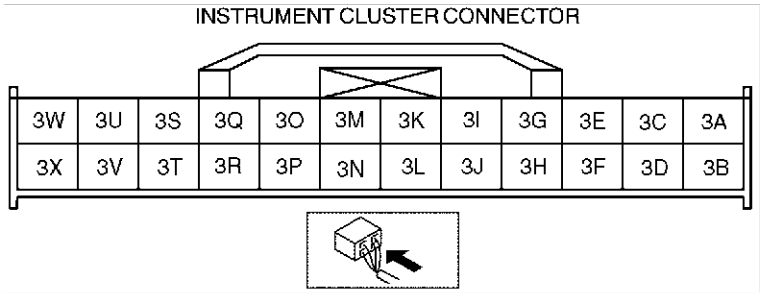

Diagnostic procedure

STEP	INSPECTION	INDICATION	ACTION
1	Unfasten driver-side seat belt. (Buckle switch on.)		Go to next step.
			Measure voltage at instrument cluster terminal 3P. Is voltage **0 V**? • If as specified, replace instrument cluster. • If not as specified, inspect following parts. — Buckle switch — Wiring harness (Buckle switch—instrument cluster)
2	Fasten driver-side seat belt. (Buckle switch off.)		Measure voltage at instrument cluster terminal 3P. Is voltage **B+**? • If as specified, replace instrument cluster. • If not as specified, inspect following parts. — Buckle switch — Wiring harness (Buckle switch—instrument cluster)
			Input signal to instrument cluster is okay.

DTC 04	Door switch on/off signal

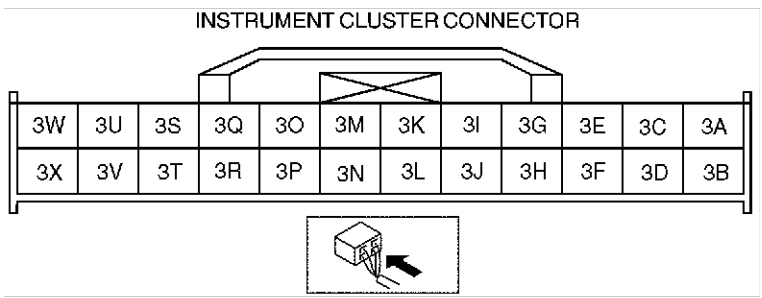

T

Diagnostic procedure

STEP	INSPECTION	INDICATION	ACTION
1	Open driver-side door. (Door switch on.)		Close driver-side door, then go to next step.
			Measure voltage at instrument cluster terminal 3I. Is voltage **0 V**? • If as specified, replace instrument cluster. • If not as specified, inspect following parts. — Door switch — Wiring harness (Instrument cluster—door switch)
2	Open passenger-side door. (Door switch on.)		Close passenger-side door, then go to next step.
			Measure voltage at instrument cluster terminal 3K. Is voltage **0 V**? • If as specified, replace instrument cluster. • If not as specified, inspect following parts. — Door switch — Wiring harness (Instrument cluster—door switch)
3	Open rear door on driver's side. (Door switch on.)		Close rear door on driver's side, then go to next step.
		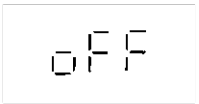	Measure voltage at instrument cluster terminal 3K. Is voltage **0 V**? • If as specified, replace instrument cluster. • If not as specified, inspect following parts. — Door switch — Wiring harness (Instrument cluster—door switch)
4	Open rear door on passenger's side. (Door switch on.)		Close rear door on passenger's side, then go to next step.
			Measure voltage at instrument cluster terminal 3K. Is voltage **0 V**? • If as specified, replace instrument cluster. • If not as specified, inspect following parts. — Door switch — Wiring harness (Instrument cluster—door switch)
5	Open liftgate. (Cargo compartment light switch on.)		Close liftgate, then go to next step.
		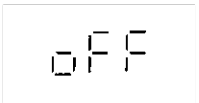	Measure voltage at instrument cluster terminal 3K. Is voltage **0 V**? • If as specified, replace instrument cluster. • If not as specified, inspect following parts. — Door switch — Wiring harness (Instrument cluster—door switch)
6	Close all doors and liftgate. (Door switch and cargo compartment light switch off.)		Measure voltage at instrument cluster terminal 3I, 3K. Is voltage **B+**? • If as specified, replace instrument cluster. • If not as specified, inspect following parts. — Door switch — Wiring harness (Instrument cluster—door switch)
		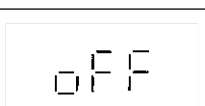	Input signals to instrument cluster are okay.

DTC 05	Door lock-link switch on/off signal

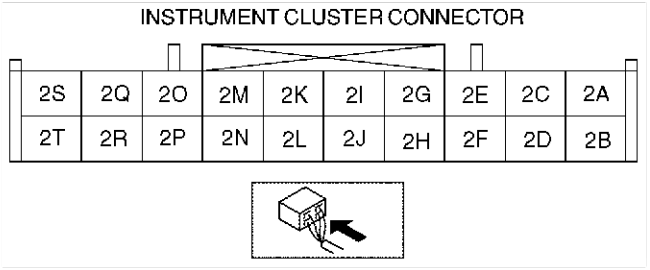

Diagnostic procedure

STEP	INSPECTION	INDICATION	ACTION
1	Turn driver-side door lock knob to lock position. (Door lock-link switch to lock position.)		Go to next step.
			Measure voltage at instrument cluster terminal 2F. Is voltage **0 V**? • If as specified, replace instrument cluster. • If not as specified, inspect following parts. — Door lock-link switch — Wiring harness (Instrument cluster—Door lock-link switch)
2	Turn driver-side door lock knob to unlock position. (Door lock-link switch to unlock position.)		Measure voltage at instrument cluster terminal 2F. Is voltage **B+**? • If as specified, replace instrument cluster. • If not as specified, inspect following parts. — Door lock-link switch — Wiring harness (Instrument cluster—Door lock-link switch)
			Input signal to instrument cluster is okay.

DTC 07	Rear window defroster switch on/off signal

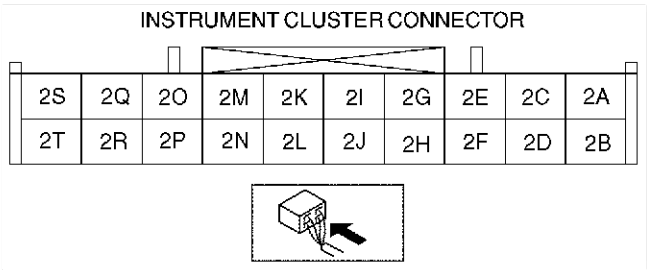

Diagnostic procedure

STEP	INSPECTION	INDICATION	ACTION
1	While display of front climate control unit is indicating OFF, turn rear window defroster switch on.		Go to next step.
		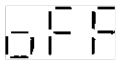	Measure voltage at instrument cluster terminal 2R. Is voltage **5 V**? • If as specified, replace instrument cluster. • If not as specified, inspect following parts. — Climate control unit — Wiring harness (Instrument cluster—climate control unit)

T

STEP	INSPECTION	INDICATION	ACTION
2	While display of front climate control unit is indicating ON, turn rear window defroster switch on.	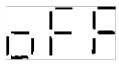	Input signal to instrument cluster is okay.
			Measure voltage at instrument cluster terminal 2R. Is voltage **0 V**? • If as specified, replace instrument cluster. • If not as specified, inspect following parts. — Climate control unit — Wiring harness (Instrument cluster—climate control unit)

DTC 08	TNS relay on/off signal

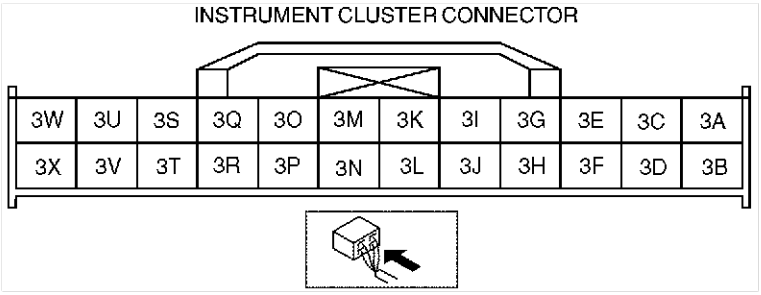

Diagnostic procedure

STEP	INSPECTION	INDICATION	ACTION
1	Turn headlight switch to TNS position. (TNS relay on.)		Go to next step.
		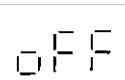	Measure voltage at instrument cluster terminal 3E. Is voltage **B+**? • If as specified, replace instrument cluster. • If not as specified, inspect following parts. — TNS relay — Wiring harness (Battery—TNS relay—instrument cluster)
2	Turn headlight switch off. (TNS relay off.)		Measure voltage at instrument cluster terminal 3E. Is voltage **0 V**? • If as specified, replace instrument cluster. • If not as specified, inspect following parts. — TNS relay — Wiring harness (TNS relay—instrument cluster)
		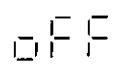	Input signal to instrument cluster is okay.

DTC 09	Headlight switch on/off signal

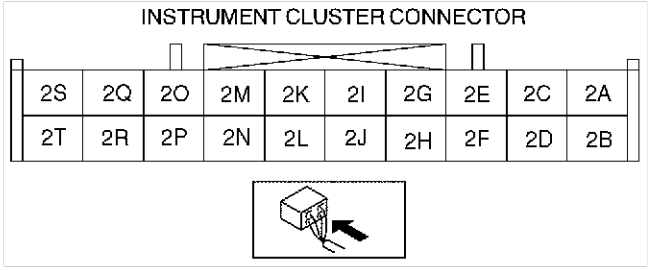

Diagnostic procedure

STEP	INSPECTION	INDICATION	ACTION
1	Turn headlight switch to headlight position.		Go to next step.
			Measure voltage at instrument cluster terminal 2Q. Is voltage **0 V**? • If as specified, replace instrument cluster. • If not as specified, inspect following parts. — Headlight switch — Wiring harness (Instrument cluster—headlight switch—GND)
2	Turn headlight switch off.		Measure voltage at instrument cluster terminal 2Q. Is voltage **B+**? • If as specified, replace instrument cluster. • If not as specified, inspect following parts. — Headlight switch — Wiring harness (Instrument cluster—headlight switch—GND)
			Input signal to instrument cluster is okay.

DTC 10	Vehicle speed input signal	
INSPECTION	INDICATION	ACTION
Rotate drive wheels using chassis roller.		Input signal to instrument cluster is okay.
		Inspect following parts **With ABS and TCS** • ABS/TCS HU/CM • Wiring harness (Instrument cluster—ABS/TCS HU/CM) **With ABS, without TCS** • ABS HU/CM • Wiring harness (Instrument cluster—ABS HU/CM)

DTC 11	Engine speed input signal	
INSPECTION	INDICATION	ACTION
Start engine.		Input signal to instrument cluster is okay.
	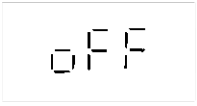	Inspect following parts. • PCM • Wiring harness (PCM—instrument cluster)

T

DTC 12	Operation signal to speedometer		
INSPECTION	**INDICATION**	**SITUATION**	**ACTION**
Wait for **2 seconds** after selecting DTC 12.		Speedometer needle moves full scale then returns to **60 km/h or 60 MPH**.	Speedometer is okay.
		Other than stated above.	Replace instrument cluster.
		—	

DTC 13	Operation signal to tachometer		
INSPECTION	**INDICATION**	**SITUATION**	**ACTION**
Wait for **2 seconds** after selecting DTC 13.		Tachometer needle moves full scale then returns to **3000 rpm**.	Tachometer is okay.
		Other than stated above.	Replace instrument cluster.
		—	

DTC 14	Operation signal to buzzer		
INSPECTION	**INDICATION**	**SITUATION**	**ACTION**
Wait for **2 seconds** after selecting DTC 14.	(Fixed)	Buzzer continuously sounds.	Buzzer is okay.
		Buzzer does not continuously sound.	Replace instrument cluster.

DTC 15	Operation signal to rear fog light relay		
INSPECTION	**INDICATION**	**SITUATION**	**ACTION**
Wait for **2 seconds** after selecting DTC 15.	(Turns on and off)	Rear fog light indicator light turns on and off **three times**.	Rear fog light relay is okay.
		Other than stated above.	Inspect rear fog light indicator light bulb for burn out or looseness. • If there is malfunction, replace or reinstall bulb as necessary. • If bulb is okay, inspect rear fog light relay. Inspect rear fog light relay. • If as specified, replace instrument cluster. • If not as specified, replace rear fog light relay.

DTC 16	Operation signal to fuel-level warning light		
INSPECTION	**INDICATION**	**SITUATION**	**ACTION**
Wait for **2 seconds** after selecting DTC 16.	(Turns on and off)	Fuel-level warning light turns on and off **three times**.	Fuel-level warning light is okay.
		Other than stated above.	Inspect bulb for burn out or looseness. • If there is malfunction, replace or reinstall bulb as necessary. • If bulb is okay, replace instrument cluster.

DTC 17	Operation signal to rear window defroster indicator light		
INSPECTION	**INDICATION**	**SITUATION**	**ACTION**
Wait for **2 seconds** after selecting DTC 17.	17 (Turns on and off)	Rear window defroster indicator light turns on and off **three times**.	Rear window defroster indicator light is okay.
		Other than stated above.	Inspect LED for burn out or looseness. • If there is malfunction, replace or reinstall LED as necessary. • If bulb is okay, replace instrument cluster.

DTC 18	Ignition key illumination on/off signal

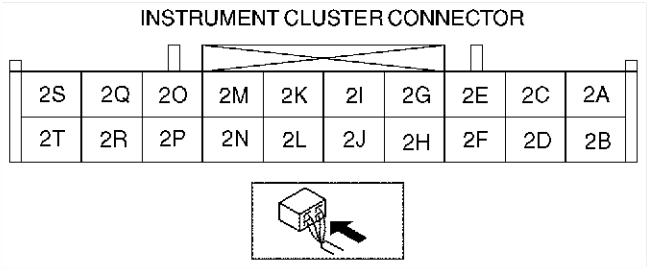

Diagnostic procedure

INSPECTION	INDICATION	SITUATION	ACTION
Wait for **2 seconds** after selecting DTC 18.	18 (Turns on and off)	Ignition key illumination turns on and off **three times**.	Ignition key illumination is okay.
		Other than stated above.	Measure voltage at instrument cluster terminal 2A. Is voltage **B+**? • If as specified, replace instrument cluster. • If not as specified, inspect following parts. — Ignition key illumination — Wiring harness (Battery—ignition key illumination—instrument cluster)

DTC 20	Operation signal to rear window defrostor relay on/off signal

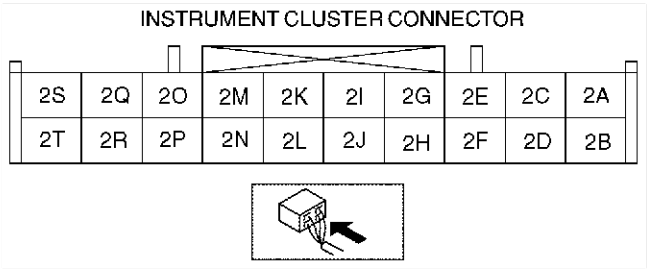

T

Diagnostic procedure

INSPECTION	INDICATION	SITUATION	ACTION
Wait for **2 seconds** after selecting DTC 20.	(Turns on and off)	Rear window defroster relay turns on and off **three times**.	Rear window defroster relay is okay.
		Other than stated above.	Measure voltage at instrument cluster terminal 2P. Is voltage **B+**? • If as specified, replace instrument cluster. • If not as specified, inspect following parts. — Wiring harness (Instrument cluster—rear window defroster relay)

DTC 21 Operation signal to door lock timer unit

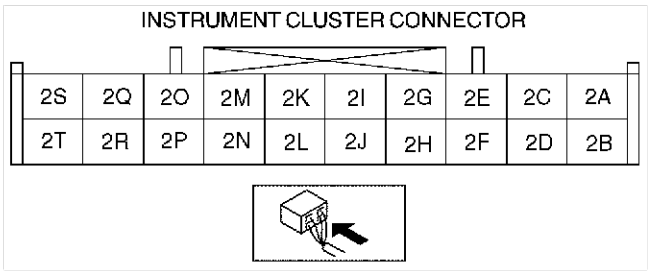

Diagnostic procedure

INSPECTION	INDICATION	SITUATION	ACTION
Wait for **2 seconds** after selecting DTC 21.	(Turns on and off)	All door lock knobs lock and unlock **three times**.	Door lock timer unit is okay.
		Other than stated above.	Measure voltage at instrument cluster terminal 2D. Is voltage **B+**? • If as specified, replace instrument cluster. • If not as specified, inspect following parts. — Door lock timer unit — Wiring harness (Battery—door lock timer unit—instrument cluster)

DTC 22 Fuel level signal

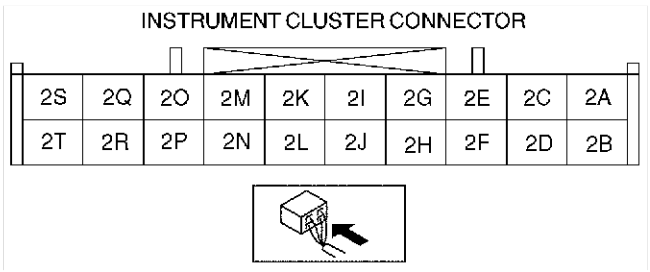

Diagnostic procedure

STEP	INSPECTION	INDICATION	ACTION
1	Select DTC 22 with fuel gauge sender unit connector disconnected.	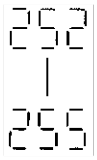	Go to next step.
		Other than stated above.	Replace instrument cluster.
2	Connect instrument cluster terminal 2C to ground.	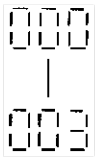	Go to next step.
		Other than stated above.	Replace instrument cluster.
3	Using **SST** (Fuel and thermometer checker) or resistor, input **20 ohms** to instrument cluster terminal 2C.	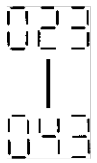	Go to next step.
		Other than stated above.	Replace instrument cluster.
4	Using **SST** (Fuel and thermometer checker) or resistor, input **60 ohms** to instrument cluster terminal 2C.		Go to next step.
		Other than stated above.	Replace instrument cluster.
5	Using **SST** (Fuel and thermometer checker) or resistor, input **100 ohms** to instrument cluster terminal 2C.		Inspect fuel gauge sender unit.
		Other than stated above.	Replace instrument cluster.

DTC 23	Operation signal to fuel gauge		
INSPECTION	INDICATION	SITUATION	ACTION
Wait for **2 seconds** after selecting DTC 23.		Fuel gauge indicates in following order for every **2 seconds**. • F→1/2→E→F (fixed)	Fuel gauge is okay.
		Other than stated above.	Replace instrument cluster.
		Replace instrument cluster.	

T

DTC 24	Water temperature signal

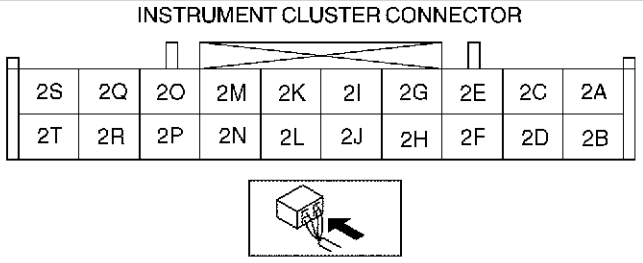

Diagnostic procedure

STEP	INSPECTION		INDICATION (Reference)		ACTION
1	• Using WDS or equivalent, verify whether any/both of the following DTCs for PCM are indicated. — P0117 — P0118	Yes	—		Go to applicable DTC inspection.
		No	—		Go to next step.
2	• Start engine and idle it. • Using WDS or equivalent, check coolant temperature. • Check instrument cluster indication when coolant temperature is **50 °C {122 °F}**.		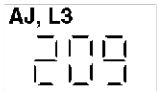		Go to Step 4.
			Other than stated above.		Go to next step.
3	Using oscilloscope, verify wave pattern at instrument cluster terminal 2E when coolant temperature is **50 °C {122 °F}**.		Refer to Figure 1		Replace instrument cluster.
			Other than stated above.		Replace PCM.
4	Check instrument cluster indication when coolant temperature is **70 °C {158 °F}**.		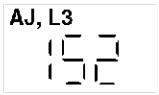	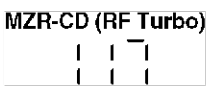	Go to Step 6.
			Other than stated above.		Go to next step.
5	Using oscilloscope, verify wave pattern at instrument cluster terminal 2E when coolant temperature is **70 °C {158 °F}**.		Refer to Figure 2		Replace instrument cluster.
			Other than stated above.		Replace PCM.
6	Check instrument cluster indication when coolant temperature is **90 °C {194 °F}**.		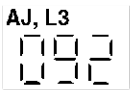	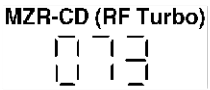	Input signal to instrument cluster is okay.
			Other than stated above.		Go to next step.
7	Using oscilloscope, verify wave pattern at instrument cluster terminal 2E when coolant temperature is **90 °C {194 °F}**.		Refer to Figure 3		Replace instrument cluster.
			Other than stated above.		Replace PCM.

Figure (AJ, L3)

Oscilloscope setting
- 1 V/DIV (Y)
- 50 ms/DIV (X)
- DC range

FIGURE 1

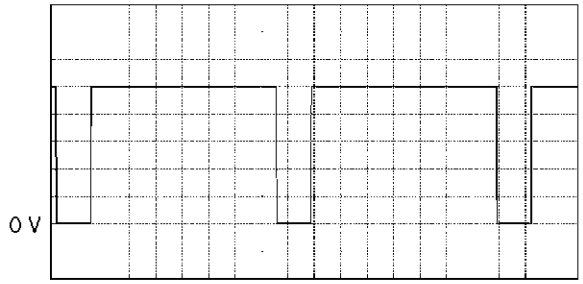

FIGURE 2

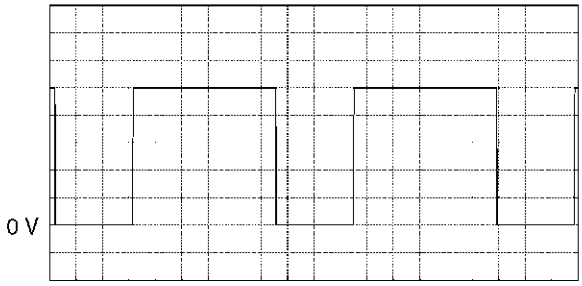

FIGURE 3

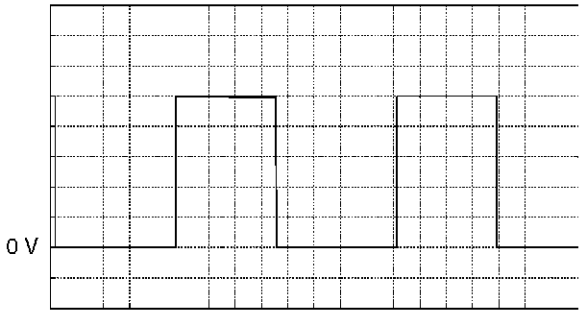

—

Figure (MZR-CD (RF Turbo))

Oscilloscope setting
- 1 V/DIV (Y)
- 50 ms/DIV (X)
- DC range

FIGURE 1

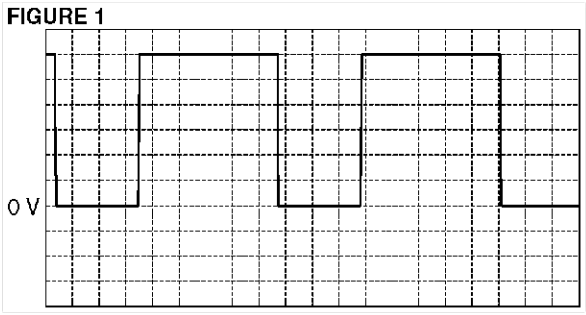

FIGURE 2

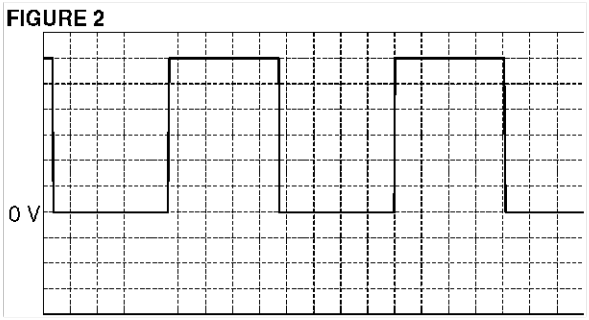

FIGURE 3

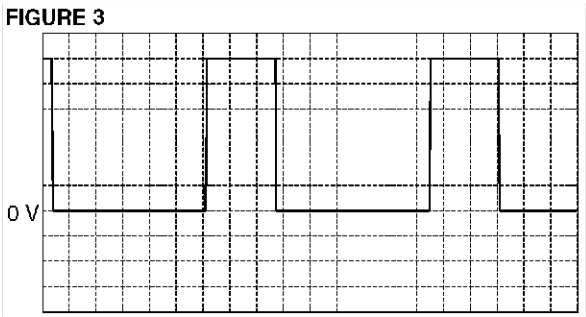

—

T

DTC 25	Operation signal to water temperature gauge		
INSPECTION	**INDICATION**	**SITUATION**	**ACTION**
Wait for **2 seconds** after selecting DTC 25.		Water temperature gauge indicates in following order for every **2 seconds**. • H→Center→C→H (fixed)	Water temperature gauge is okay.
		Other than stated above.	Replace instrument cluster.
		Replace instrument cluster.	

DTC 26	LCD indication		
INSPECTION	**INDICATION**	**SITUATION**	**ACTION**
Select DTC 26.	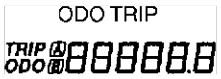	Indication is normal.	LCD is okay.
		Other than stated above.	Replace instrument cluster.

DTC 27	Operation signal to interior light

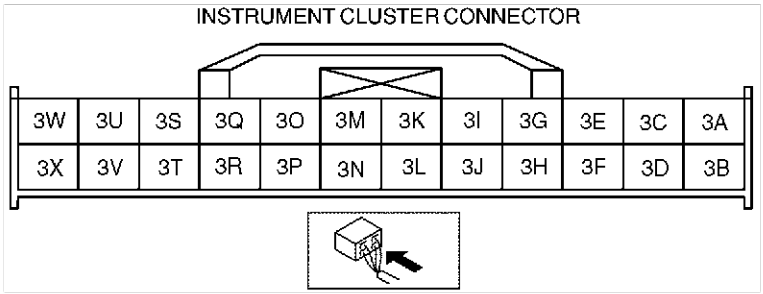

Diagnostic procedure

INSPECTION	INDICATION	SITUATION	ACTION
1. Turn interior light switch to DOOR position. 2. Wait for **2 seconds** after selecting DTC 27.		Interior light turns on and off **three times**.	Interior light is okay.
		Other than stated above.	Measure voltage at instrument cluster terminal 3H. Is voltage **B+**? • If as specified, replace instrument cluster. • If not as specified, inspect following parts. — Interior light — Wiring harness (Battery—interior light—instrument cluster)

DTC 29	Rear fog light on/off signal

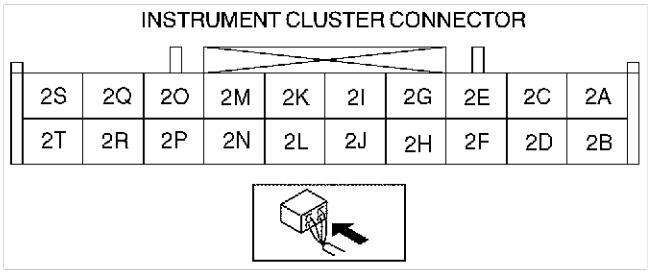

Diagnostic procedure

STEP	INSPECTION	INDICATION	ACTION
1	1. Verify that indication is off. 2. Push and hold rear fog light switch. (Rear fog light switch is on.)		Go to next step.
			Measure voltage at instrument cluster terminal 2T. Is voltage **5 V**? • If as specified, replace instrument cluster. • If not as specified, inspect following parts. — Rear fog light switch — Wiring harness (Instrument cluster—rear fog light switch)
2	1. Verify that indication is on. 2. Push and hold rear fog light switch. (Rear fog light switch is off.)		Input signals to instrument cluster are okay.
			Measure voltage at instrument cluster terminal 2T. Is voltage **0 V**? • If as specified, replace instrument cluster. • If not as specified, inspect following parts. — Rear fog light switch — Wiring harness (Instrument cluster—rear fog light switch)

DTC 31	Key reminder on/off signal

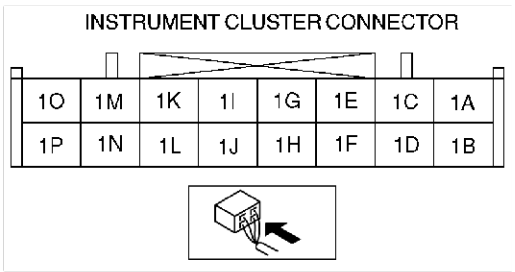

Diagnostic procedure

STEP	INSPECTION	INDICATION	ACTION
1	Remove key from steering lock and then insert key into steering lock after selecting DTC 31. (Key reminder switch on.)		Go to next step.
			Measure voltage at instrument cluster terminal 1J. Is voltage **B+**? • If as specified, replace instrument cluster. • If not as specified, replace following parts. — Key reminder switch — Wiring harness (Battery—key reminder switch—instrument cluster)
2	Remove key from steering lock (Key reminder switch off.)		Measure voltage at instrument cluster terminal 1J. Is voltage **0V**? • If as specified, replace instrument cluster. • If not as specified, inspect following parts. — Key reminder switch — Wiring harness (Key reminder switch—instrument cluster)
		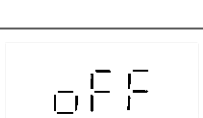	Input signal to instrument cluster is okay.

T

DTC 40	Front fog light relay on/off signal

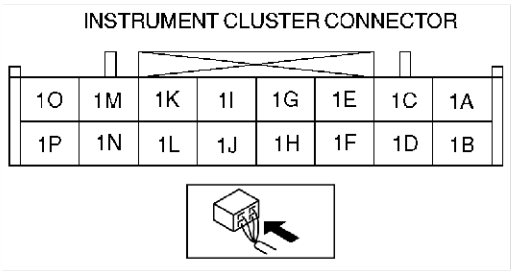

Diagnostic procedure

STEP	INSPECTION	INDICATION	ACTION
1	Turn front fog light switch on. (Front fog light relay on.)		Go to next step.
			Measure voltage at instrument cluster terminal 1N. Is voltage **B+**? • If as specified, replace instrument cluster. • If not as specified, inspect following parts. — Rear fog light switch — Wiring harness (Instrument cluster—front fog light relay)
2	Turn front fog light switch off. (Front fog light relay off.)		Input signals to instrument cluster are okay.
			Measure voltage at instrument cluster terminal 1N. Is voltage **0 V**? • If as specified, replace instrument cluster. • If not as specified, inspect following parts. — Front fog light switch — Wiring harness (Instrument cluster—front fog light relay)

DTC 41	Shift-lock solenoid (P position signal) on/off signal

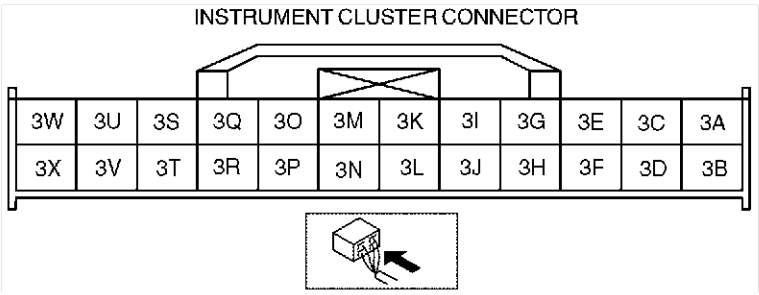

Diagnostic procedure

STEP	INSPECTION	INDICATION	ACTION
1	Shift selector lever to any position except P position.		Go to next step.
			Measure voltage at instrument cluster terminal 3T. Is voltage **0 V**? • If as specified, replace instrument cluster. • If not as specified, inspect following parts. — P range switch — Wiring harness (IG switch—shift-lock solenoid (P position signal)—instrument cluster)

STEP	INSPECTION	INDICATION	ACTION
2	Shift selector lever to P position		Measure voltage at instrument cluster terminal 3T. Is voltage **5 V**? • If as specified, inspect following parts. — P range switch — Wiring harness (IG switch—shift-lock solenoid (P position signal)—instrument cluster)
			Input signal to instrument cluster is okay.

DTC 42	Operation signal to key interlock solenoid

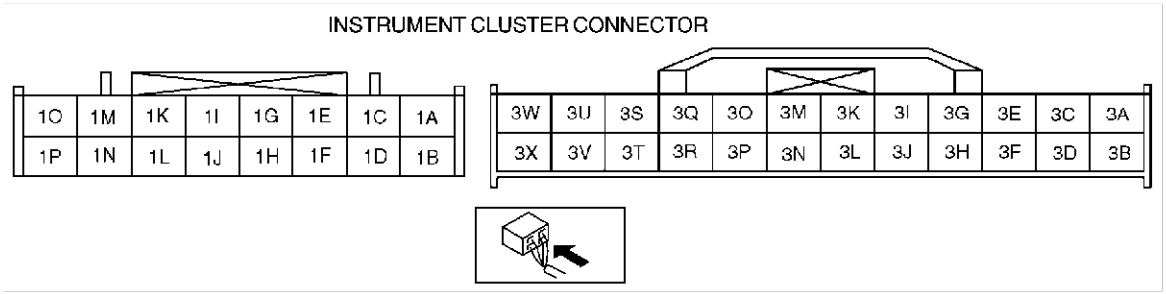

Diagnostic procedure

INSPECTION	INDICATION	SITUATION	ACTION
Wait for **2 seconds** after selecting DTC 42.	 (Turns on and off)	IG Key shall not move to lock. (Solenoid to be on **for five seconds)**	Key interlock solenoid is okay.
		Other than stated above.	Measure voltage at instrument cluster terminal 1L, 3G. Is voltage **B+**? • If as specified, replace instrument cluster. • If not as specified, inspect following parts. — Wiring harness (Instrument cluster—key interlock solenoid) — Wiring harness (Instrument cluster—key interlock resistor)

End Of Sie

T

FUEL GAUGE SENDER UNIT REMOVAL/INSTALLATION

AME811860960W01

MZR-CD (RF Turbo)

Warning

- **Repairing a fuel tank that has not been properly steam cleaned can be dangerous. Explosion or fire may cause death or serious injury. Always properly steam clean a fuel tank before repairing it.**
- **fuel line spills and leakage are dangerous. Fuel can also irritate skin and eyes. To prevent this, do not damage the sealing surface of the fuel gauge sender unit when removing or installing.**

1. Level the vehicle.
2. Complete the “BEFORE REPAIR PROCEDURE”. (See F5–75 BEFORE REPAIR PROCEDURE.)
3. Disconnect the negative battery cable.
4. Remove the front seats.
5. Remove the front scuff plates.
6. Remove the rear scuff plates.
7. Remove the console lower cover.
8. Loosen the parking brake lever installation bolts.
9. Partially peel back the floor covering until the service hole cover appears.
10. Remove the service hole cover.
11. Remove in the order indicated in the table.

1	Screw
2	Fuel hose
3	Connector
4	Fuel gauge sender unit

12. Install in the reverse order of removal.
13. Complete the “AFTER REPAIR PROCEDURE”. (See F5–75 AFTER REPAIR PROCEDURE.)

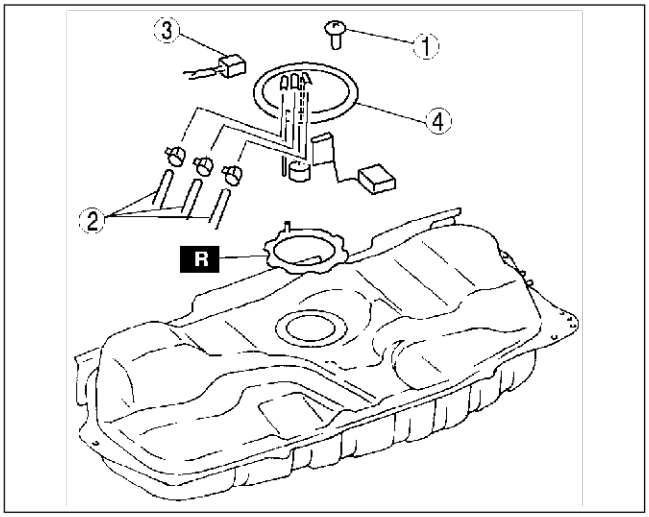

AME8118W113

End Of Sec

FUEL GAUGE SENDER UNIT INSPECTION

AME811860960W02

1. Move the float to the topmost and bottommost positions, and verify that the resistance between terminals A and B of the unit and the position of the float are as indicated in the figure.
   - If they are not as indicated, replace the fuel gauge sender unit.

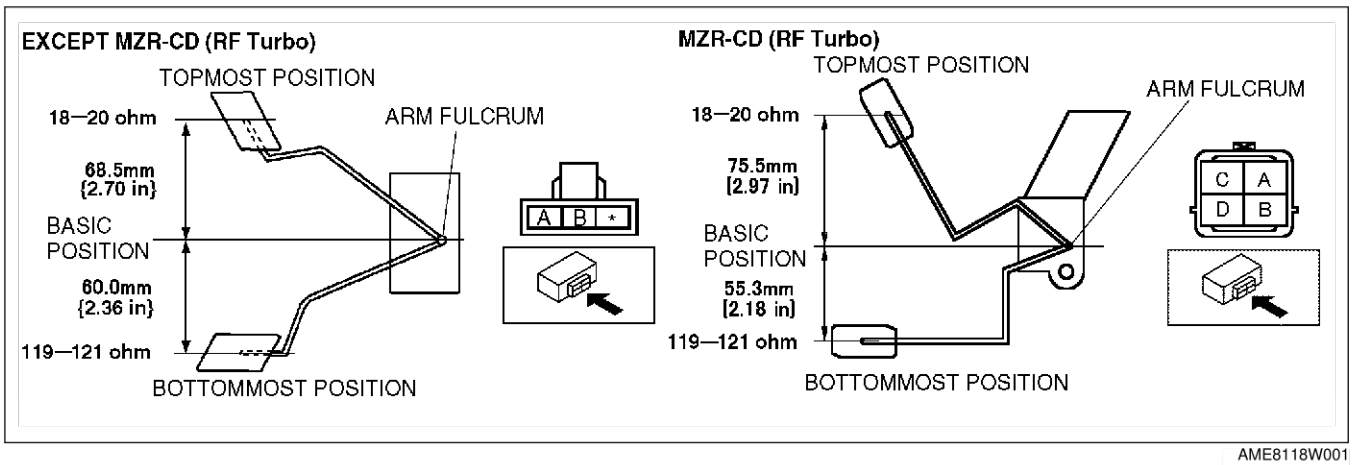

AME8118W001

End Of Sec

THEFT-DETERRENT SYSTEM

THEFT-DETERRENT CONTROL MODULE INSPECTION

AME812067790W01

1. Remove the theft-deterrent control module without disconnecting the connectors.
2. Measure the voltage at the theft-deterrent control module terminals as indicated below.
3. Disconnect the theft-deterrent control module connector before inspecting for continuity at terminals B, N, O, P, and T.
4. If not as specified, inspect the parts listed under “Action.”
   - If the parts and wiring harnesses are okay but the system still does not work properly, replace the theft-deterrent control module.

Terminal Voltage Table (Reference)

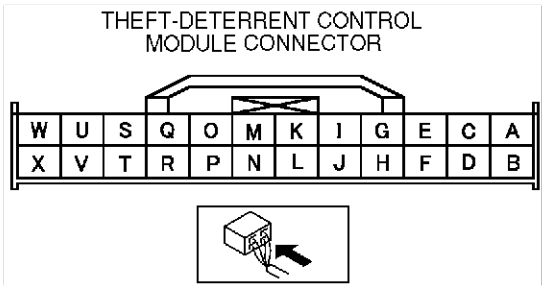

AME8120W001

Terminal	Signal	Connected to	Test condition	Voltage (V)/ continuity	Action
A	—	—	—	—	—
B	Theft-deterrent control module ground	GND	Under any condition: inspect for continuity to ground	Yes	• Inspect GND
C	—	—	—	—	—
D	—	—	—	—	—
E	Theft-deterrent horn on/off	Theft-deterrent horn relay	Theft-deterrent system alarm 1: Other	B+	• Inspect theft-deterrent horn relay • Inspection related harness
			Theft-deterrent system alarm 1: Active	Alternates below 1.0 and B+	
F	Key reminder switch on/off	Key reminder switch	Key reminder switch on	B+	• Inspect key reminder switch • Inspect related harness
			Key reminder switch off	Below 1.0	
G	—	—	—	—	—
H	—	—	—	—	—
I	—	—	—	—	—
J	—	—	—	—	—
K	—	—	—	—	—
L	—	—	—	—	—
M	—	—	—	—	—
N	Lock/unlock	Driver’s door lock-link switch	Driver’s door lock-link switch locked: inspect for continuity to ground	No	• Inspect driver’s door lock-link switch • Inspect related harness
			Driver’s door lock-link switch unlocked: inspect for continuity to ground	Yes	

T

Terminal	Signal	Connected to	Test condition		Voltage (V)/ continuity	Action
O	Lock/unlock	• Passenger's door lock-link switch • Sliding door lock-link switch	Sliding door closed	Passenger's and sliding door lock-link switch locked: inspect for continuity to ground	No	• Inspect passenger's or sliding door lock-link switch • Inspect related harness
				Passenger's and sliding door lock-link switch unlocked: inspect for continuity to ground	Yes	
P	Bonnet open/ closed	Bonnet switch	Bonnet switch on: inspect for continuity to ground		Yes	• Inspect bonnet switch • Inspect related harness
			Bonnet switch off: inspect for continuity to ground		No	
Q	Door key cylinder switch	• Driver's door key cylinder switch • Passenger's door key cylinder switch • Liftgate key cylinder switch	Driver's or passenger's door or liftgate locked with key or transmitter		2.5	• Inspect driver's or passenger's door key cylinder switch • Inspect liftgate key cylinder switch • Inspect related harness
			Driver's or passenger's door or liftgate unlocked with key or transmitter		Below 1.0	
			Other		5	
R	—	—	—		—	—
S	Security light on/off	Security light	Security light on		Below 1.0	• Inspect security light • Inspect related harness
			Security light off		B+	
T	Door open/ closed	• Door switch • Cargo compartment light switch	Any door or liftgate open: inspect for continuity to ground		Yes	• Inspect door switch • Inspect cargo compartment light switch • Inspect related harness
			All doors and liftgate closed: inspect for continuity to ground		No	
U	Hazard warning signal output	Flasher unit	Theft-deterrent system alarm 1: Active		Below 1.0	• Inspect flasher unit (See T–35 FLASHER UNIT INSPECTION) • Inspect related harness
			Theft-deterrent system alarm 1: Other		B+	
V	Keyless entry system discernment signal input	Keyless unit	Under any condition		5	• Inspect keyless unit • Inspection related harness
W	IG1	ENGINE 10 A fuse	Ignition switch at ON position		B+	• Inspect ignition switch • Inspect ENGINE 10 A fuse • Inspect related harness
			Ignition switch at LOCK or ACC position		Below 1.0	
X	Power supply	ROOM 15 A fuse	Under any condition		B+	• Inspect ROOM 15 A fuse

End Of Sie

IMMOBILIZER SYSTEM

IMMOBILIZER UNIT INSPECTION

AME812267003W01

1. Measure the voltage at the immobilizer unit terminals as indicated below.
2. Disconnect the immobilizer unit connector before inspecting for continuity at terminal C.
   - If not as specified, inspect the parts listed under “Action.”
   - If the parts and wiring harnesses are okay but the system still does not work properly, replace the immobilizer unit.

Terminal Voltage Table (Reference)

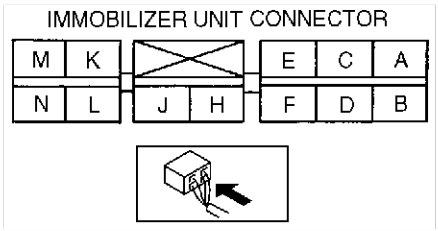

AME8122W101

Terminal	Signal	Connected to	Test condition	Voltage (V)/ continuity	Action
A	Communication with PCM	PCM	Ignition switch at ON position	B+	• Inspect PCM • Inspect related harness
			Ignition switch at LOCK position	Below 1.0	
B	—	—	—	—	—
C	GND	GND	Under any condition: inspect for continuity to ground	Yes	• Inspect GND
D	Power supply to coil	Coil	Key removed from key cylinder	Below 1.0	• Inspect coil • Inspect related harness
			Key inserted into key cylinder	Cannot be measured	
E	—	—	—	—	—
F	Key ID number input	Coil	Key removed from key cylinder	Below 1.0	• Inspect coil • Inspect related harness
			Key inserted into key cylinder	Cannot be measured	
H*	Key reminder switch input	Key reminder switch	Key removed from key cylinder	Below 1.0	• Inspect key reminder switch • Inspect related harness
			Key inserted into key cylinder	B+	
J	Back-up power supply	Battery	Under any condition	B+	• Inspect ROOM 15 A fuse • Inspect related harness
K*	Starter relay output	Starter relay	Ignition switch at START position	Below 1.0	• Inspect starter relay • Inspect related harness
			Ignition switch at LOCK position	0	
L	Power supply	Ignition switch	Ignition switch at ON position	B+	• Inspect ENGINE 10 A fuse • Inspect related harness
			Ignition switch at OFF position	Below 1.0	
M	Security light output	Security light	Security light neither illuminates nor blinks	B+	• Inspect security light • Inspect related harness
N	—	—	—	—	—

* : European (L.H.D. U.K.) specs. (except AJ)

End Of Sta

IMMOBILIZER SYSTEM REPROGRAM PROCEDURE

AME812267000W04

- Perform this procedure for L3 and MZR-CD (RF Turbo) engine for European (L.H.D. U.K.) specs. The procedure for other vehicles has not been changed from the Mazda MPV Workshop Manual (1666-1*-99F).

Note

- When an error occurs during the reprogram procedures, except when both the immobilizer unit and PCM are replaced, repeat the procedure from Step 1. If you still cannot reprogram, confirm how many keys can start the engine. Then, perform the key replacement or additional reprogram procedure according to the valid key number.
- To make a copy of the key or replace the immobilizer system component parts (the key (s), steering lock, immobilizer unit, and/or PCM), the customer should bring all keys to the dealer. This is because the previously programmed key IDs are erased when reprogramming the key IDs into the immobilizer unit and PCM.
- If the customer has only one valid key when replacing the immobilizer system component parts, the dealer should contact a distributor to obtain the code word.
- To replace the immobilizer unit or PCM, there should be at least one valid key. Otherwise, both the immobilizer unit and PCM should be replaced.
- The immobilizer unit and PCM cannot be changed from one car to another. If the immobilizer unit or PCM is replaced with one from another car, the engine will not start. Reprogramming of the IDs and code word of an immobilizer unit that has already been programmed is not possible.
- The immobilizer unit and PCM should not be newly replaced as a trial during troubleshooting. If this is done, the ID and code word will be programmed into the new unit and it cannot be used for other cars even if you find that the old unit was normal.
- The immobilizer system cannot be deactivated.
- Confirm that all keys registered can start the engine after the reprogram procedure. When confirming, wait for **more than 5 seconds** before inserting the next key.
- When the customer does not need to register more than two keys, the following procedures can be stopped after registering two keys.
- If the key cannot be registered in spite of the fact that the immobilizer system operates normally, there may be a malfunction with the key reminder switch or wiring harness.

Key Replacement or Addition
When the customer has two or more valid keys

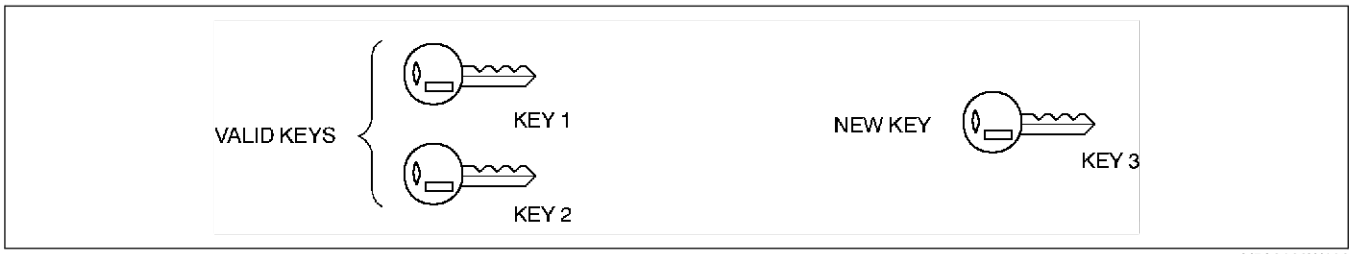

Y5A8122W102

Note

- If no specific time interval is given, each step should be performed **within 30 seconds** of the previous step.

1. Cut new transponder-equipped key(s).
2. Insert key 1 into the steering lock and hold for **1 second or more**.
3. Remove and insert key 1 **five times** at **no more than 1-second intervals**.
   (1) After the final key insertion, verify that the security light illuminates.
   (2) Remove the key from the steering lock and verify that the security light goes off.
4. Insert key 2 into the steering lock and turn the key to the ON position.
   (1) Verify that the security light illuminates for **1—2 seconds**.
   (2) After verifying that the security light goes off, turn the key to the LOCK position and remove from the steering lock.
5. Insert key 3 into the steering lock and turn the key to the ON position.
   (1) Verify that the security light illuminates for **1—2 seconds**.
   (2) After verifying that the security light goes off, turn the key to the LOCK position.
6. If there are 4—8 keys (valid and/or new keys), repeat Step 5 with each key.
7. Wait for **30 seconds**.

When the customer has only one or no valid key (code word is required)

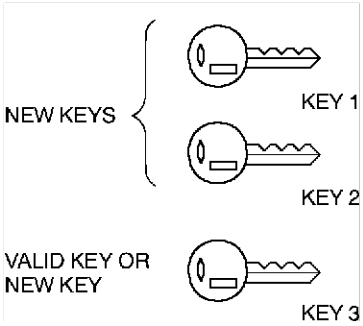

Y5A8122W103

Note
- If no specific time interval is given, each step should be performed **within 30 seconds** of the previous step.

1. Cut new transponder-equipped key(s).
2. Insert key 1 into the steering lock and hold for **1 second or more**.
3. Remove and insert key 1 **five times** at no more than 1-second intervals.
   (1) After the final key insertion, verify that the security light flashes. (**300 ms** ON—**300 ms** OFF)
   (2) Wait for **5 minutes** until the security light flashes at **1.2-second intervals**.
   (3) Input the code word. (See T–64 CODE WORD INPUT PROCEDURE.)
   (4) After verifying that the security light has switched from flashing to straight illumination, turn the key to the ON position.
   (5) After verifying that the security light goes off, turn the key to the LOCK position and remove from the steering lock.
4. Insert key 2 into the steering lock and turn the key to the ON position.
   (1) Verify that the security light illuminates for **1—2 seconds**.
   (2) After verifying that the security light goes off, turn the key to the LOCK position and remove from the steering lock.
5. Insert key 3 into the steering lock and turn the key to the ON position.
   (1) Verify that the security light illuminates for **1—2 seconds**.
   (2) After verifying that the security light goes off, turn the key to the LOCK position.
6. If there are 4—8 keys (valid and/or new keys), repeat Step 5 with each key.
7. Wait for **30 seconds**.
8. After reprogramming, clear DTCs stored in the PCM.

Steering Lock Replacement
When the customer has two or more valid keys from the old steering lock

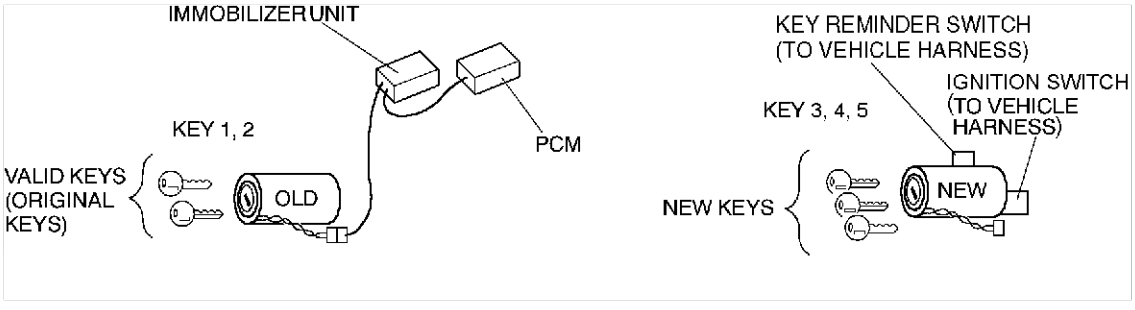

Y5A8122W104

Note
- When replacing the steering lock, the coil and keys should be replaced as a set.
- If no specific time interval is given, each step should be performed **within 30 seconds** of the previous step.

1. Remove the steering lock.
2. Connect the ignition switch connector and key reminder switch connector to a new steering lock.
3. Connect the coil connector to the removed steering lock as shown in the figure.
4. Insert key 1 into the removed steering lock.

5. Insert key 3 into the new steering lock and hold for **1 second or more**.
6. Remove and insert key 3 five times at **no more than 1-second intervals**.
   (1) After the final key insertion, verify that the security light illuminates.
   (2) Remove the key from the steering lock and verify that the security light goes off.

Note
- Perform Steps 7, 8 and 9 **within 30 seconds** after Step 6—(2).

7. Remove key 1 from the steering lock.
8. Insert key 2 into the removed steering lock.
9. Insert key 3 into the new steering lock and turn the key to the ON position.
   (1) Verify that the security light illuminates.
10. After verifying that the security light goes off, turn the key to the LOCK position.

Note
- Perform Steps 11 and 12 **within 30 seconds** after Step 10.

11. Disconnect the coil connector from the removed steering lock and connect to the new steering lock.
12. Turn key 3 to the ON position and verify that the security light illuminates.
13. After verifying that the security light goes off, turn key 3 to the LOCK position and remove from the steering lock.
14. Insert key 4 into the new steering lock and turn the key to the ON position.
   (1) Verify that the security light illuminates.
   (2) After verifying that the security light goes off, turn the key to the LOCK position and remove from the steering lock.
15. Insert key 5 into the new steering lock and turn the key to the ON position.
   (1) After verifying that the security light goes off, turn the key to the LOCK position.
16. Wait for **30 seconds**.
17. Install the new steering lock to the vehicle.

When the customer has only one or no valid key (code word is required)

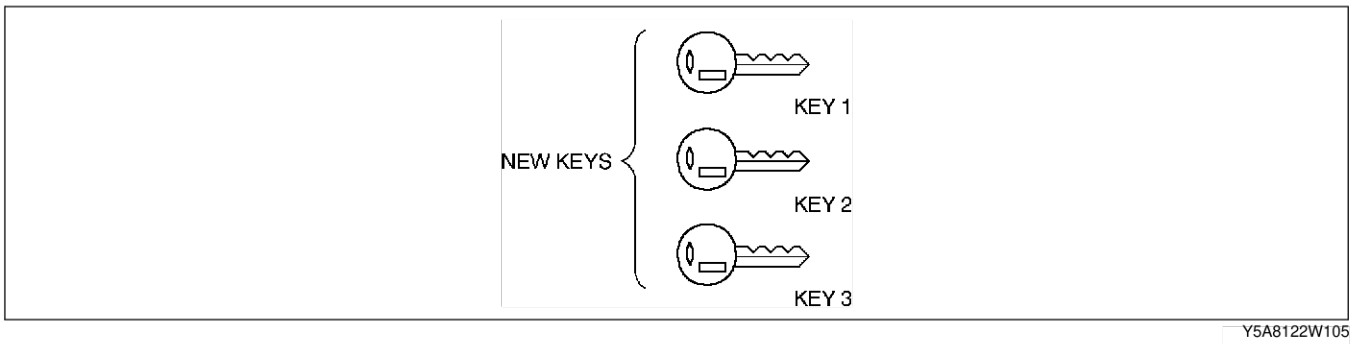

Y5A8122W105

Note
- When replacing the steering lock, the coil and keys should be replaced as a set.
- If no specific time interval is given, each step should be performed **within 30 seconds** of the previous step.

1. Replace the steering lock.
2. Insert key 1 into the steering lock and hold for **1 second or more**.
3. Remove and insert key 1 **five times** at **no more than 1-second intervals**.
   (1) After the final key insertion, verify that the security light flashes. (**300 ms** ON—**300 ms** OFF)
   (2) Wait for **5 minutes** until the security light flashes at **1.2-second intervals**.
   (3) Input the code word. (See T–64 CODE WORD INPUT PROCEDURE.)
   (4) After verifying that the security light has switched from flashing to straight illumination, turn the key to the ON position.
   (5) After verifying that the security light goes off, turn the key to the LOCK position and remove from the steering lock.
4. Insert key 2 into the steering lock and turn the key to the ON position.
   (1) Verify that the security light illuminates for **1—2 seconds**.
   (2) After verifying that the security light goes off, turn the key to the LOCK position and remove from the steering lock.

5. Insert key 3 into the steering lock and turn the key to the ON position.
   (1) Verify that the security light illuminates for **1—2 seconds**.
   (2) After verifying that the security light goes off, turn the key to the LOCK position.
6. If there are 4—8 keys (valid and/or new keys), repeat Step 5 with each key.
7. Wait for **30 seconds**.
8. After reprogramming, clear DTCs stored in the PCM.

Immobilizer Unit Replacement
When the customer does not have valid key

- PCM needs to be replaced with immobilizer unit. Perform “Both Immobilizer unit and PCM Replacement” of the IMMOBILIZER SYSTEM REPROGRAM PROCEDURE. (See T–63 Both Immobilizer Unit and PCM Replacement.)

When the customer has at least one valid key (code word is required)

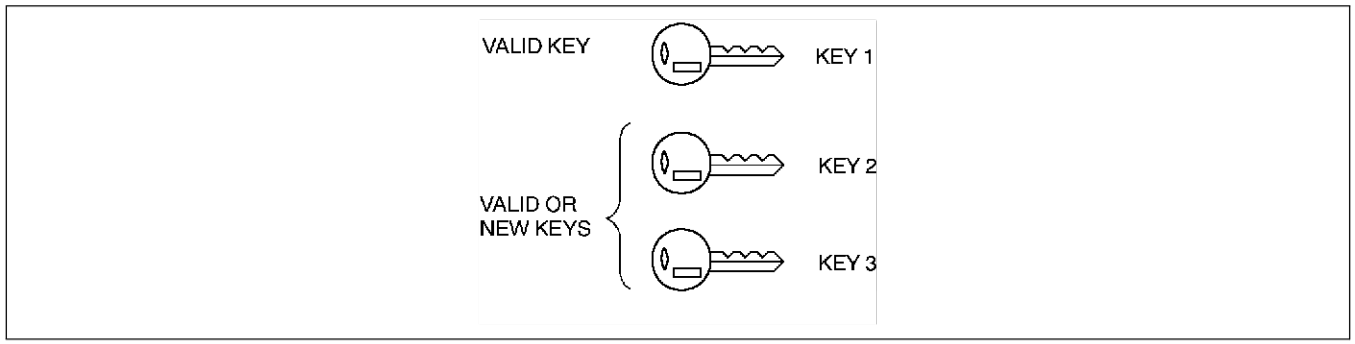

Y5A8122W106

Note

- If no specific time interval is given, each step should be performed **within 30 seconds** of the previous step.

1. Cut new transponder-equipped key(s) if necessary.
2. Replace immobilizer unit.
3. Insert key 1 into the steering lock and turn the key to the ON position.
   (1) Verify that the security light illuminates.
4. After the security light goes off, turn key 1 to the LOCK position.
   (1) Remove the key from the steering lock and wait for **2 seconds or more**.
5. Insert key 2 into the steering lock and hold **1 second or more**.
6. Remove and insert key 2 **five times** at **no more than 1-second intervals**.
   (1) After the final key insertion, verify that the security light flashes. (**300 ms** ON—**300 ms** OFF)
   (2) Wait for **5 minutes** until the security light flashes at **1.2-second intervals**.
   (3) Input the code word. (See T–64 CODE WORD INPUT PROCEDURE.)
   (4) After verifying that the security light has switched from flashing to straight illumination, turn the key to the ON position.
   (5) After verifying that the security light goes off, turn the key to the LOCK position and remove from the steering lock.
7. Insert key 1 into the steering lock and turn the key to the ON position.
   (1) Verify that the security light illuminates for **1—2 seconds**.
   (2) After verifying that the security light goes off, turn the key to the LOCK position and remove from the steering lock.
8. Insert key 3 into the steering lock and turn the key to the ON position.
   (1) Verify that the security light illuminates for **1—2 seconds**.
   (2) After the security light goes off, turn the key to the LOCK position.
9. If there are 4—8 keys (valid and/or new keys), repeat Step 8 with each key.
10. Wait for **30 seconds**.
11. After reprogramming, clear DTCs stored in the PCM.

PCM Replacement
When the customer does not have valid key

- Immobilizer unit needs to be replaced with PCM. Perform “Both Immobilizer Unit and PCM Replacement” of the IMMOBILIZER SYSTEM REPROGRAM PROCEDURE. (See T–63 Both Immobilizer Unit and PCM Replacement.)

When the customer has two or more valid keys

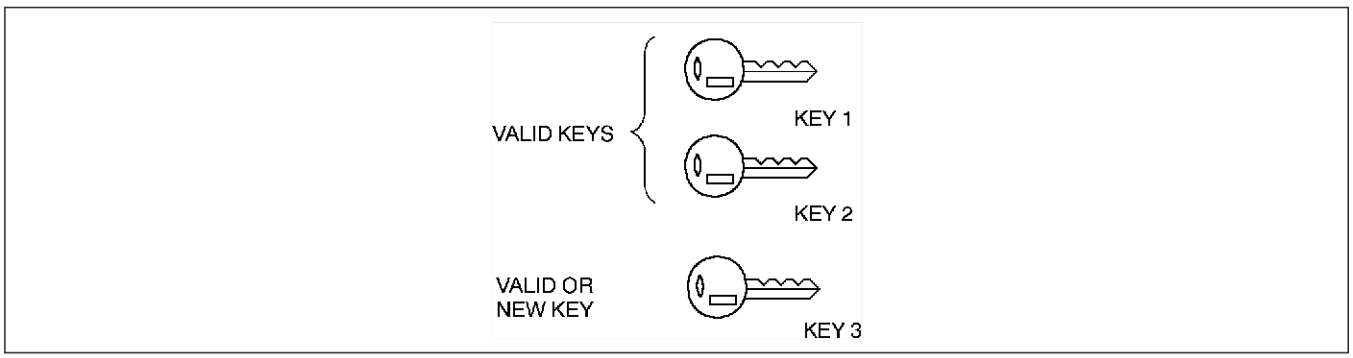

Y5A8122W107

Note

- If no specific time interval is given, each step should be performed **within 30 seconds** of the previous step.

1. Cut new transponder-equipped key(s) if necessary.
2. Replace the PCM.
3. Insert key 1 into the steering lock and turn the key to the ON position.
   (1) Verify that the security light illuminates.
   (2) After verifying that the security light goes off, turn the key to the LOCK position.
4. Remove and insert key 1 **five times** at **no more than 1-second intervals**.
   (1) After the final key insertion, verify that the security light illuminates.
   (2) Remove the key from the steering lock and verify that the security light goes off.
5. Insert key 2 into the steering lock and turn the key to the ON position.
   (1) Verify that the security light illuminates for **1—2 seconds**.
   (2) After verifying that the security light goes off, turn the key to the LOCK position and remove from the steering lock.
6. Repeat Step 5 with key 1.
7. Insert key 3 into the steering lock and turn the key to the ON position.
   (1) Verify that the security light illuminates for **1—2 seconds**.
   (2) After verifying that the security light goes off, turn the key to the LOCK position.
8. If there are 4—8 keys (valid and/or new keys), repeat Step 7 with each key.
9. Wait for **30 seconds**.

When the customer has only one valid key (code word is required)

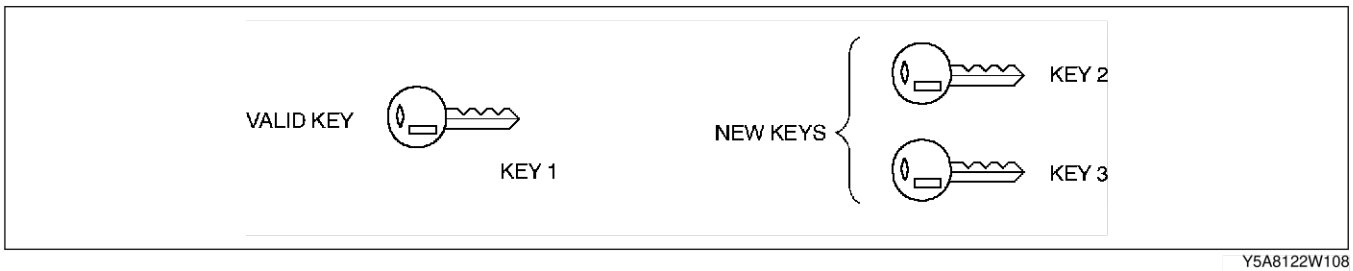

Y5A8122W108

Note

- If no specific time interval is given, each step should be performed **within 30 seconds** of the previous step.

1. Cut new transponder-equipped key(s) if necessary.
2. Replace the PCM.
3. Insert key 1 into the steering lock and turn the key to the ON position.
   (1) Verify that the security light illuminates.

4. After verifying that the security light goes off, turn key 1 to the LOCK position.
   (1) Remove the key from the steering lock and wait for **2 seconds or more**.
5. Insert key 2 into the steering lock and wait for **1 second or more**.
6. Remove and insert key 2 **five times** at **no more than 1-second intervals**.
   (1) After the final key insertion, verify that the security light flashes. (**300 ms** ON—**300 ms** OFF)
   (2) Wait for **5 minutes** until the security light flashes at **1.2-second intervals**.
   (3) Input the code word. (See T–64 CODE WORD INPUT PROCEDURE.)
   (4) After verifying that the security light has switched from flashing to straight illumination, turn the key to the ON position.
   (5) After verifying that the security light goes off, turn the key to the LOCK position and remove from the steering lock.
7. Insert key 3 into the steering lock and turn the key to the ON position.
   (1) Verify that the security light illuminates for **1—2 seconds**.
   (2) After verifying that the security light goes off, turn the key to the LOCK position.
8. If there are 4—8 keys (valid and/or new keys), repeat Step 8 with each key.
9. Wait for **30 seconds**.
10. After reprogramming, clear DTCs stored in the PCM.

Both Immobilizer Unit and PCM Replacement
When the customer has two or more valid keys

Note
- Keys may be valid or new.
- When an error occurs in Steps 1 to 3, repeat the procedure from Step 1.
- When an error occurs in Step 4, perform the “Reprogram error recovery procedure for both immobilizer unit and PCM replacement.”
- If no specific time interval is given, each step should be performed **within 30 seconds** of the previous step.

1. Cut new transponder equipped key(s) if necessary.
2. Replace immobilizer unit and PCM.
3. Using key 1, turn ignition switch to ON position. Verify that security light illuminates and then goes out.
   (1) Turn key 1 to LOCK position. Verify that security light blinks once repeatedly.
4. Using key 2, turn ignition switch to ON position. Verify that security light illuminates and then goes out.
   (1) Turn key 2 to LOCK position. Verify that security light blinks twice repeatedly.
5. Using key 3, turn ignition switch to ON position. Verify that security light illuminates and then goes out.
   (1) Turn key 3 to LOCK position. Verify that security light blinks three times repeatedly.
6. If there are 4—8 keys (valid and/or new keys), repeat Step 4.
7. Wait for **30 seconds** to quit reprogram mode.

Reprogram error recovery procedure for both immobilizer unit and PCM replacement

Note
- If no specific time interval is given, each step should be performed **within 30 seconds** of the previous step.

1. Insert key 1 into the steering lock and turn the key to the ON position.
   (1) Verify that the security light illuminates.
   (2) After verifying that the security light goes off, turn the key to the LOCK position.
2. Remove and insert key 1 **five times** at **no more than 1-second intervals**.
   (1) After the final key insertion, verify that the security light illuminates.
   (2) Remove the key from the steering lock and verify that the security light goes off.
3. Insert key 2 into the steering lock and turn the key to the ON position.
   (1) Verify that the security light illuminates for **1—2 seconds**.
   (2) After verifying that the security light goes off, turn the key to the LOCK position and remove from the steering lock.
4. Insert key 3 into the steering lock and turn the key to the ON position.
   (1) Verify that the security light illuminates for **1—2 seconds**.
   (2) After verifying that the security light goes off, turn the key to the LOCK position.
5. Wait for **30 seconds**.

End Of Sta

CODE WORD INPUT PROCEDURE

AME812267000W05

- Perform this procedure for L3 and MZR-CD (RF Turbo) engine for European (L.H.D. U.K.) specs. The procedure for other vehicles has not been changed from the Mazda MPV Workshop Manual (1666-1*-99F).

Note

- A code word is composed of eight digits from 1—9 and is part of the immobilizer unit from the manufacturer. Each unit has its own code word. To obtain the code word, you need to have the immobilizer serial number, then ask the distributor.
- To input the code word into the PCM, turn the ignition key and count the number of flashes of the security light. The calculation of the number of flashes of the security light comes with the timing of the turning of the key.

1. Wait for **5 minutes** until security light flashes slowly. (**300 ms** ON—**300 ms** OFF → **1.2 s** ON—**1.2 s** OFF)
2. Input the code word as shown in the example below.

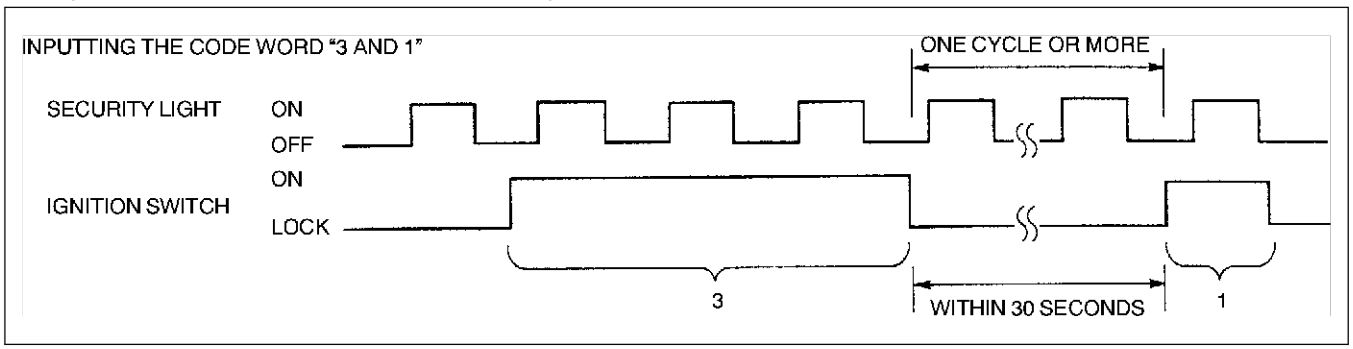

YMU914WBC

   (1) Turn ignition switch to ON position while security light is off and count three illumination cycles. As the light goes out after the third illumination, turn key to LOCK position.
   (2) Wait at least one illumination cycle and **within 30 seconds** of going to LOCK position, turn ignition switch to ON position while security light is off and count one illumination cycle. As the light goes out after the first illumination, turn key to LOCK position.
   (3) Repeat Step (2) for rest of six digits.
3. When code word is registered correctly in the PCM, the security light stops flashing and illuminates.
4. As soon as the security light stops flashing and illuminates, the following immobilizer system reprogram procedure should be started.

Note

- If the code word is not input correctly, the security light goes out after all eight digits are input. In this case, perform the "Code Word Input Error Recovery Procedure."

Examples of Incorrect Input of Code Word

Note

- The security light must flash one or more times between the digits of the code word.
- If the code word is input incorrectly, the security light goes out. Remove and insert key **five times** and repeat the procedure to input all eight figures for the code word.
- When an error occurs during the reprogram procedures except when both the immobilizer unit and PCM are replaced, repeat the procedure from Step 1. If you still cannot reprogram, confirm how many keys can start the engine. Then, perform the key replacement or addition reprogram procedure according to the valid key number.

- The security light flashes ten or more times while the ignition switch is at ON position.

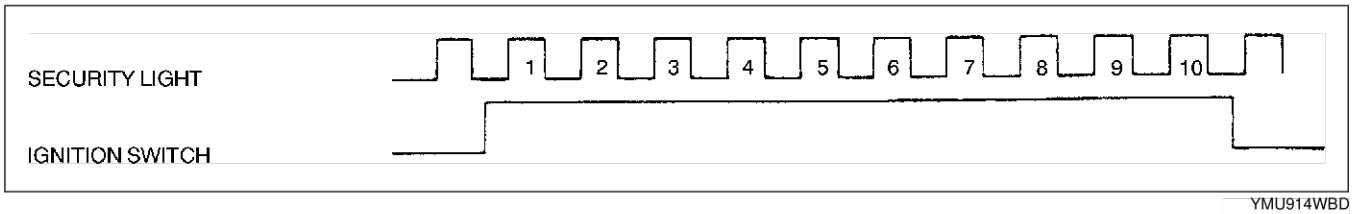

YMU914WBD

- The ignition switch is turned to ON position and LOCK position while the security light is off.

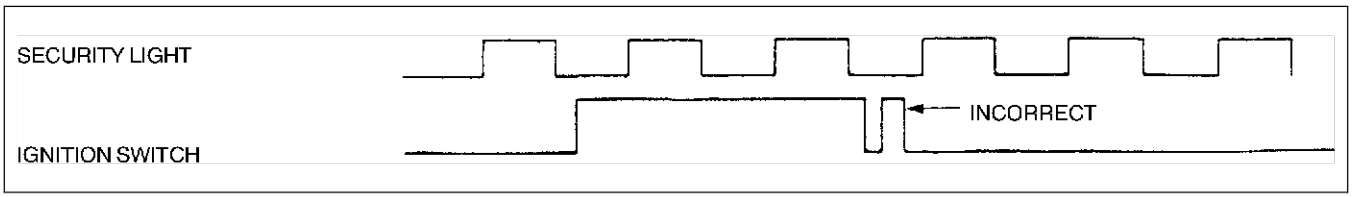

YMU914WBE

- The ignition switch is turned to LOCK position and ON position while the security light is on.

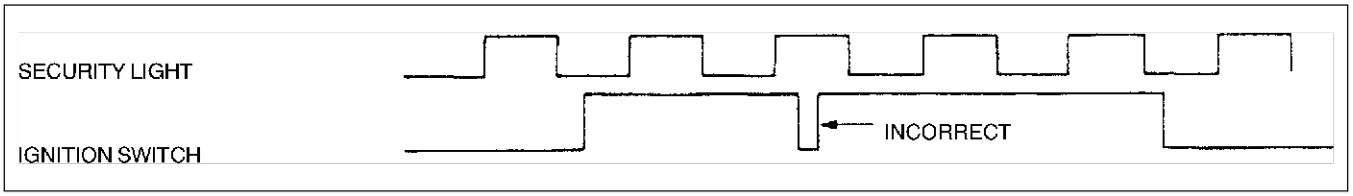

YMU914WBF

- The ignition switch is turned to LOCK position and ON position while the security light is off.

YMU914WBG

- An unmatched code word is input to the immobilizer unit.

Code Word Input Error Recovery Procedure

1. Remove and insert key **five times** at **no more than 1-second intervals**.
2. Repeat the “CODE WORD INPUT PROCEDURE.”

End Of Ste

T

AUDIO AND NAVIGATION SYSTEM

ANTI-THEFT SYSTEM (AUDIO UNIT)

AME812466900W02

Alarm Conditions

- If the anti-theft system protection has been activated, any one of the following conditions will trigger the system:
  - — Disconnected battery cable
  - — Discharged battery
  - — Disconnected audio unit connectors
- If the system is triggered, the audio unit will then be inoperative when it is reconnected to a power source, and “code” will flash on the display until the preselected code number is input. If the anti-theft system is triggered, follow the procedures in “Canceling Anti-theft Operation” to reset the unit.

Operation	Reference
Input code number to activate anti-theft system	Setting the Code Number
Delete previous code number and set new number	Canceling the Code Number
Resume audio unit operation after anti-theft system is triggered	Canceling Anti-theft Operation

Setting the Code Number

Complete each step (Steps 1–3) **within 10 seconds** or the setting procedure will be canceled.

1. Turn the ignition switch to ACC position and then turn off the audio unit.
2. First press the AUTO-M button, then simultaneously press channel button 6 for **approximately 2 seconds** until “CODE” appears on the display.

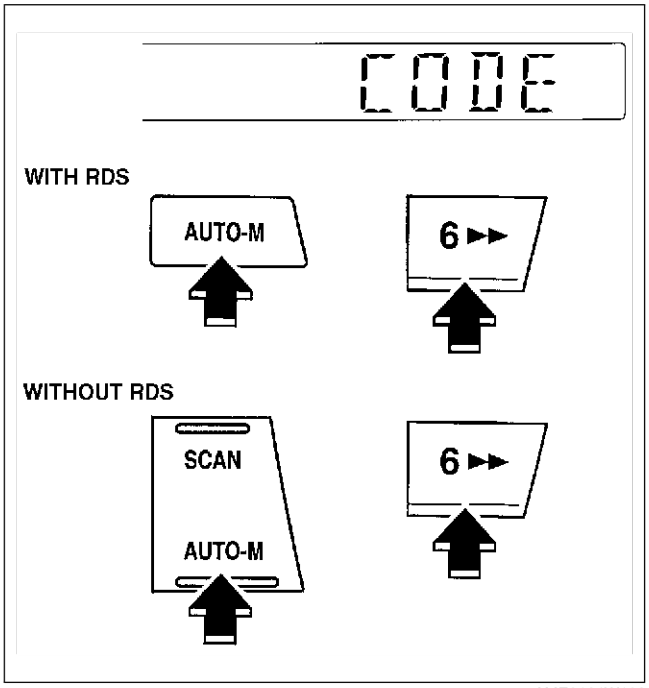

AME8124W103

3. Press the AUTO-M button again, then simultaneously press channel button 6 until bars appear on the display.
4. Select a personal code number and record it before inputting it. If the number is input and then forgotten, it cannot be canceled, and if the unit is disconnected again, the audio unit will be inoperative.

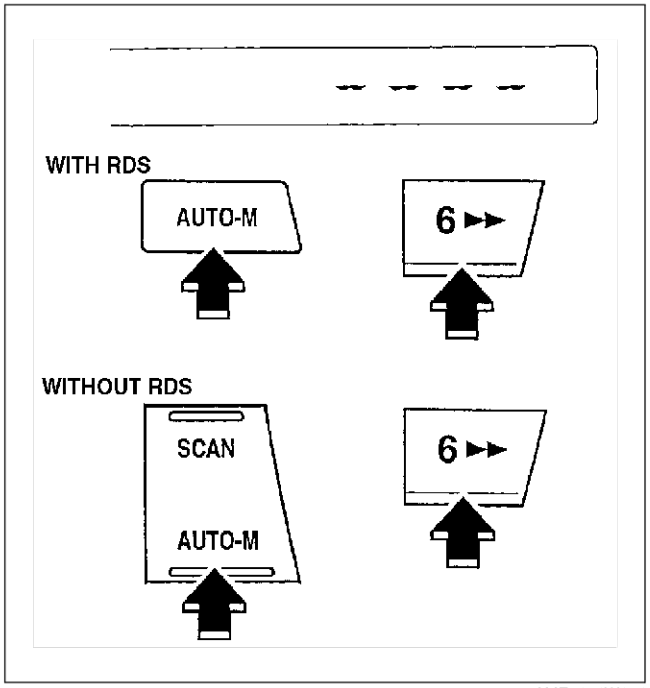

AME8124W104

5. Use channel buttons 1–4 to input the selected code number. Press button 1 for the first digit, 2 for the second, 3 for the third, and 4 for the last digit. Input the number **within 10 seconds**. If the display is deleted, repeat the procedure from Step 1.

Note
- Perform Step 6 **within 10 seconds** after Step 5.

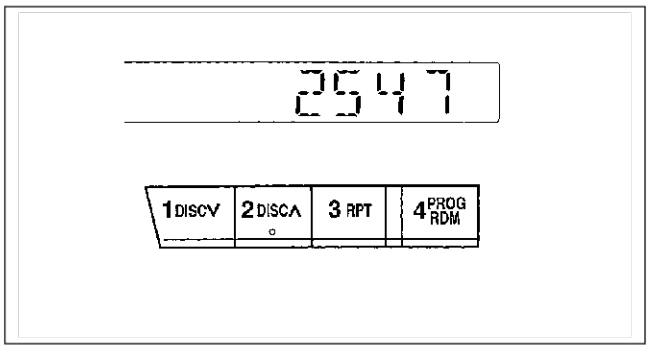

YLE8124W024

6. With the code number displayed, press the AUTO-M button, then simultaneously press channel button 6 for **approximately 2 seconds**. “CODE” will be displayed for **approximately 5 seconds**. After it disappears, the code number is set.
7. If “ERR” or “Err” (error) appears on the display, repeat the procedure from Step 1. If input error is repeated three times, turn the ignition switch to LOCK position and repeat the procedure from Step 1.

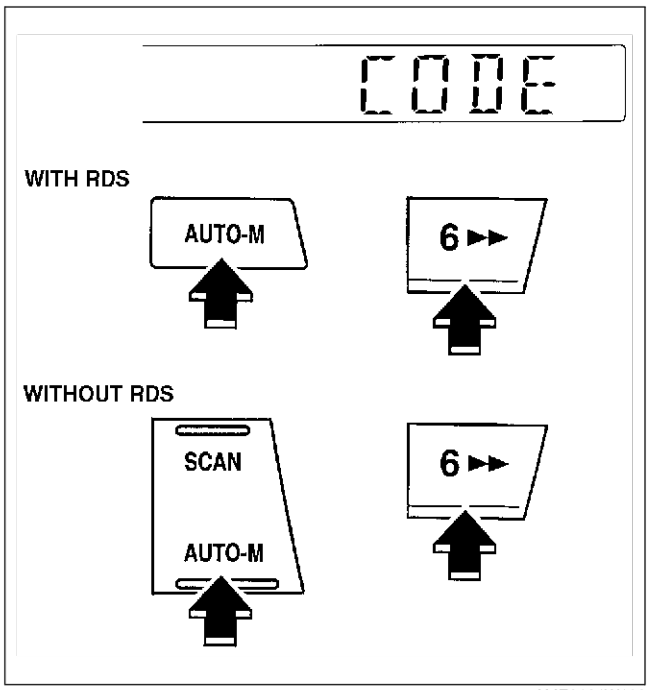

AME8124W103

T

Canceling the Code Number

Complete each step (Steps 1–3) **within 10 seconds** or the canceling procedure will be canceled.

1. Turn the ignition switch to ACC position and then turn off the audio unit.
2. First press the AUTO-M button, then simultaneously press channel button 6 for **approximately 2 seconds** until “CODE” appears on the display.

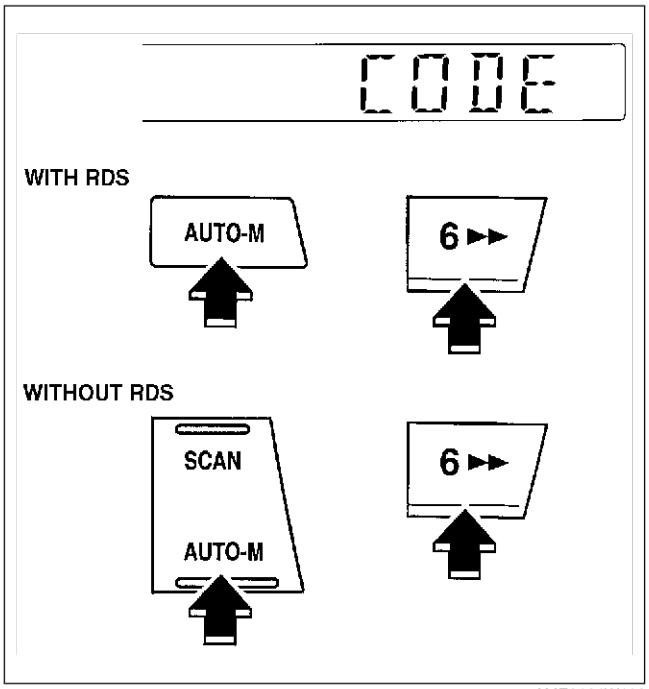

AME8124W103

3. Press the AUTO-M button again, then simultaneously press channel button 6 until bars appear on the display.

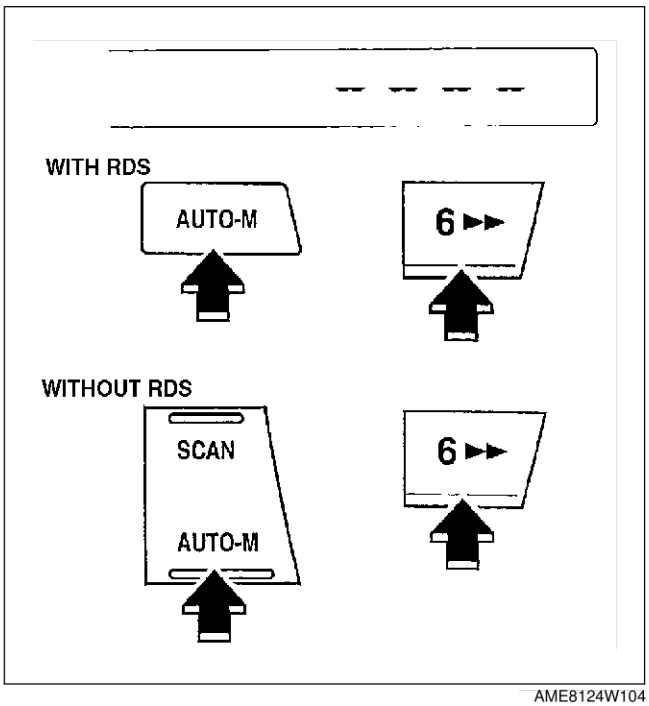

AME8124W104

4. Use channel buttons 1–4 to input the current code number. Press button 1 for the first digit, 2 for the second, 3 for the third, and 4 for the last digit. Input the number **within 10 seconds**. If the display is deleted, repeat the procedure from Step 1.

Note

- Perform Step 5 **within 10 seconds** after Step 4.

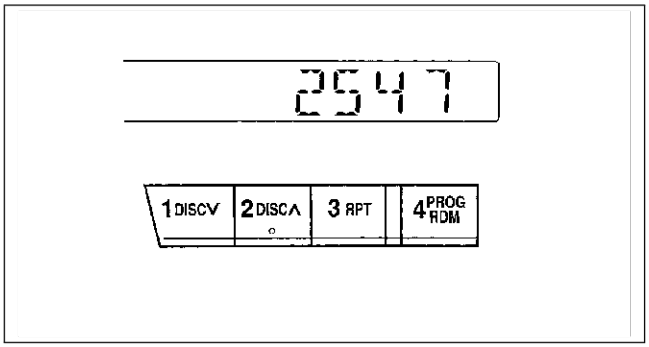

YLE8124W024

5. With the code number displayed, press the AUTO-M button, then simultaneously press channel button 6 for **approximately 2 seconds**. “CODE” will be displayed for **approximately 5 seconds**. After it disappears, the code number is canceled.
6. If “ERR” or “Err” (error) appears on the display, repeat the procedure from Step 4.

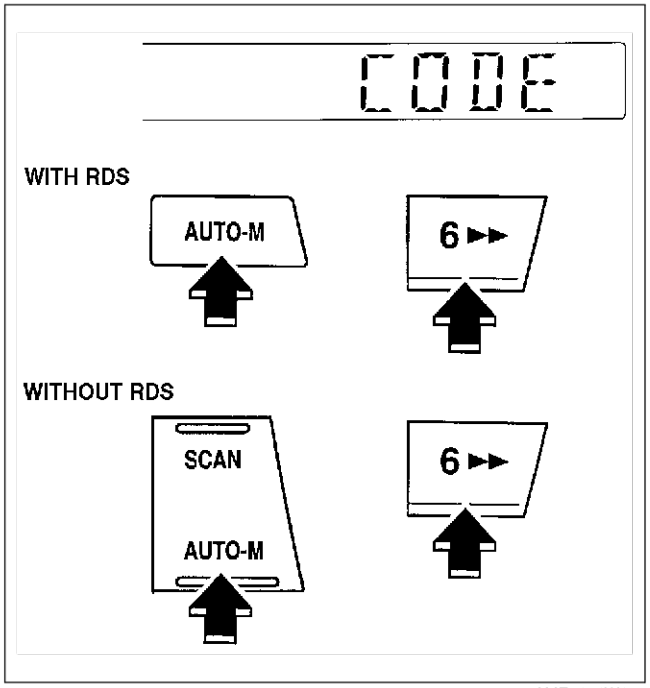

AME8124W103

Canceling Anti-theft Operation

Properly input the selected code number to deactivate the anti-theft system and resume normal audio operation.

1. Turn the ignition switch to ACC position. (“CODE” will flash on the display.)
2. First press the AUTO-M button, then simultaneously press channel button 6 for **approximately 2 seconds** until bars appears on the display.

Note
- Perform Step 3 **within 10 seconds** after Step 2.

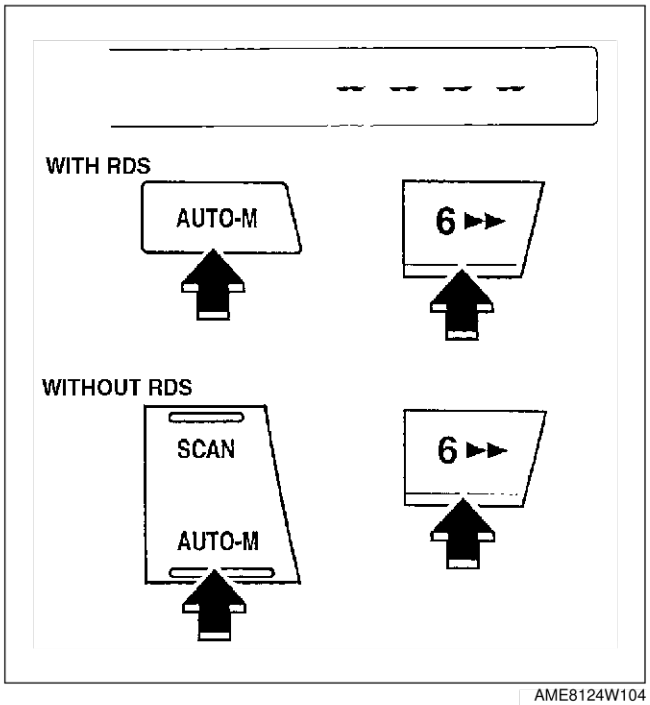

AME8124W104

T

3. Use channel buttons 1–4 to input the selected code number. Press button 1 for the first digit, 2 for the second, 3 for the third, and 4 for the last digit. Input the number **within 10 seconds**. If the display is deleted, repeat the procedure from Step 1.

   Caution
   - **Three consecutive errors, including turning the ignition switch to LOCK position and disconnecting the audio unit, will activate the anti-theft system and render the audio unit completely inoperative.**

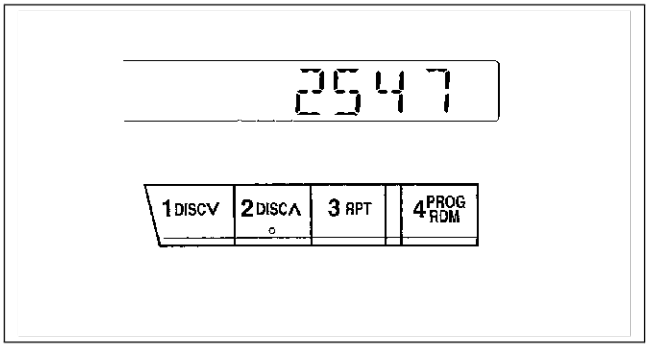

YLE8124W024

4. With the code number displayed, press the AUTO-M button, then simultaneously press channel button 6 for **approximately 2 seconds**. "CODE" will flash for **approximately 5 seconds**.
5. If "ERR" or "Err" (error) appears on the display, repeat the procedure from Step 1.

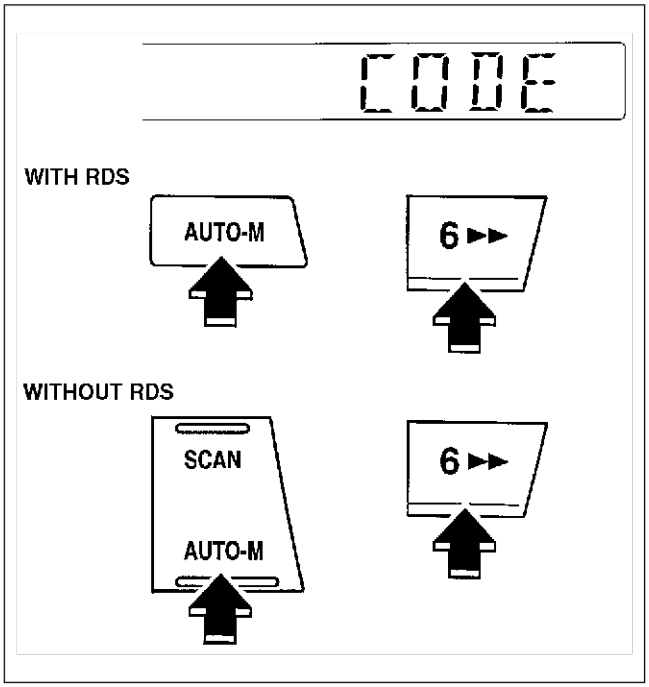

AME8124W103

End Of Sie

UPPER MODULE REMOVAL/INSTALLATION

AME812466900W03

1. Disconnect the negative battery cable.
2. Remove the audio unit.
3. Remove in the order indicated in the table.

1	Screw (See T–71 Screw Installation Note)
2	Upper module (See T–71 Upper Module Removal Note)
3	Cover (See T–71 Cover Removal Note)

4. Install in the reverse order of removal.

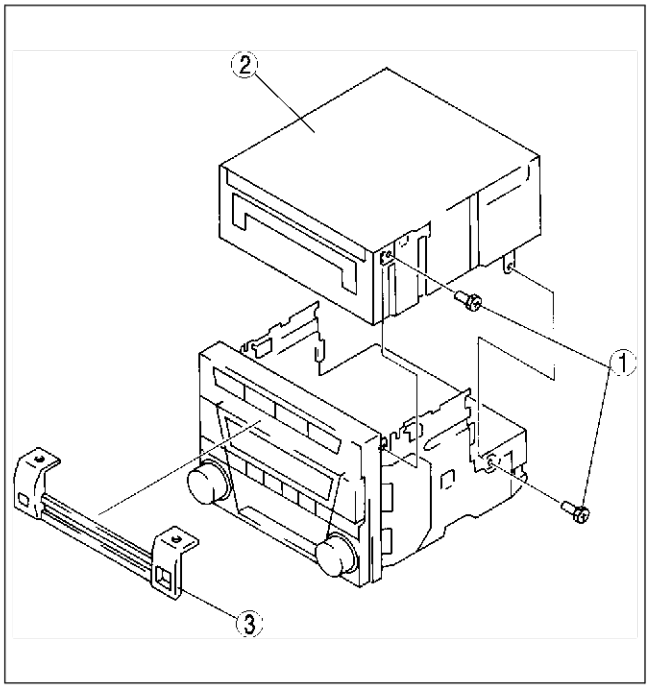

Y5J8124W004

Upper Module Removal Note

1. Insert a screwdriver into the hole stamped mark.
2. To remove upper module, lift it by pushing down the screwdriver's handle.

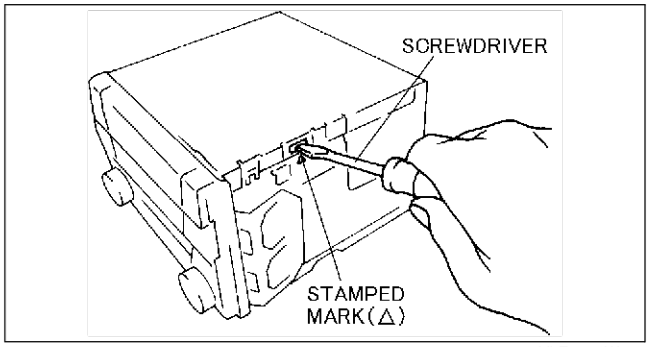

YLE8124W005

Cover Removal Note

1. Insert a tape-wrapped screwdriver between the cover and the base unit, then unlatch hook A.
2. To unlatch hook B, pull the cover upward.

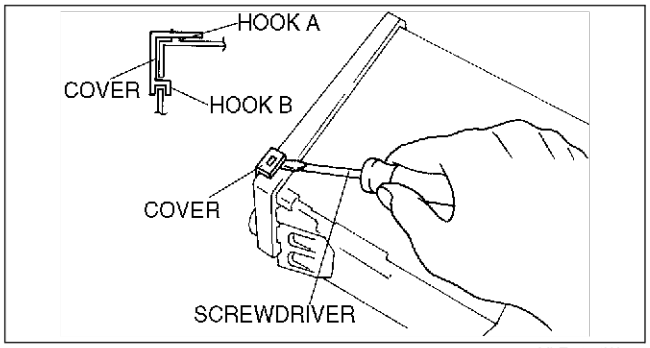

YLE8124W006

Screw Installation Note

Caution

- **If an undesignated screw is used, the inside of the upper module could be damaged. When installing the module, be sure to use a designated screw (red).**

T

LOWER MODULE REMOVAL/INSTALLATION

AME812466900W04

1. Disconnect the negative battery cable.
2. Remove the audio unit.
3. Remove in the order indicated in the table.

1	Cover (See T–72 Cover Removal Note)
2	Screw (See T–72 Screw Installation Note)
3	Lower module

4. Install in the reverse order of removal.

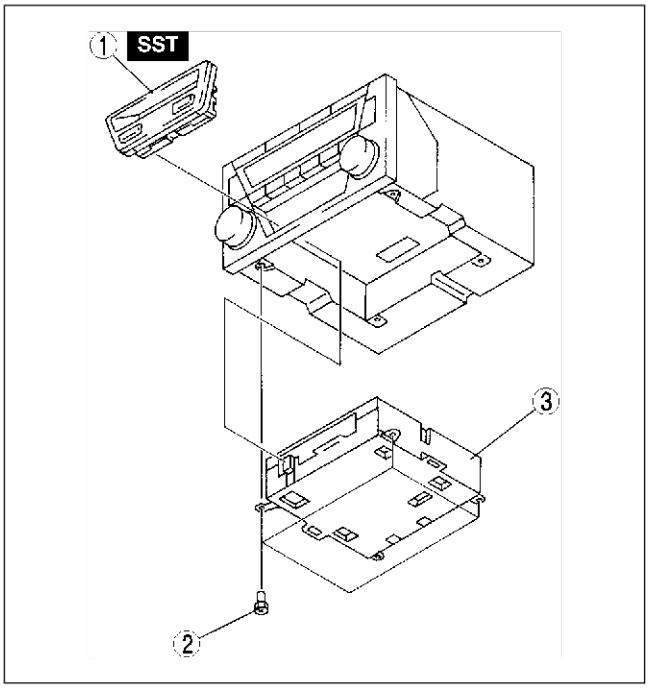

YLE8124W007

Cover Removal Note

1. Insert the **SST** into the service holes on the bottom surface of the lower module.
2. To remove the cover, push the **SST** in the direction shown by the arrow.

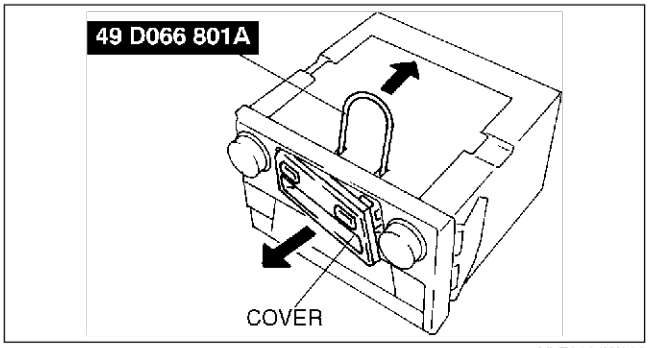

YLE8124W008

Screw Installation Note

Caution

- **If an undesignated screw is used, the inside of the upper module could be damaged. When installing the module, be sure to use a designated screw (red).**

End Of Sec

ANTI-THEFT SYSTEM (CAR-NAVIGATION UNIT)

AME812466902W02

Alarm Conditions

- If the anti-theft system protection has been activated, any one of the following conditions will trigger the system:
  — Disconnected battery cable
  — Discharged battery
  — Disconnected car-navigation unit connectors
- If the system is triggered, the car-navigation unit will then be inoperative when it is reconnected to a power source, and “code” will flash on the display until the preselected code number is input. If the anti-theft system is triggered, follow the procedures in “Canceling Anti-theft Operation” to reset the unit.

Operation	Reference
Input code number to activate anti-theft system	Setting the Code Number
Delete previous code number and set new number	Canceling the Code Number
Resume audio unit operation after anti-theft system is triggered	Canceling Anti-theft Operation

Setting the Code Number

Complete each step (Steps 1–3) **within 10 seconds** or the setting procedure will be canceled.

1. Turn the ignition switch to ACC position and then turn off the car-navigation unit.
2. Press and hold the “TA” and “OUT” buttons simultaneously for **approximately 2 seconds** until “CODE” appears on the display.

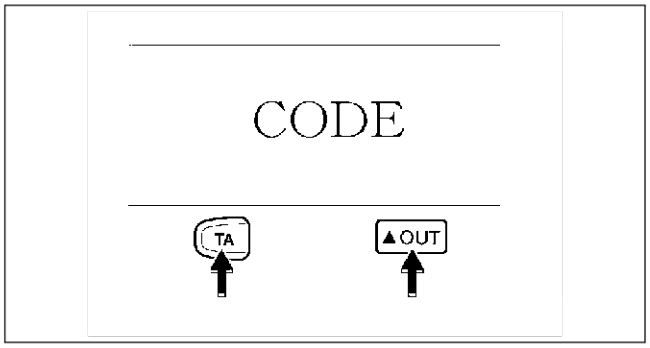

YLE8124W017

3. Press the “TA” and “OUT” buttons again until bars appear on the display.
4. Select a personal code number and record it before inputting it. If the number is input and then forgotten, it cannot be canceled, and if the unit is disconnected again, the audio unit will be inoperative.

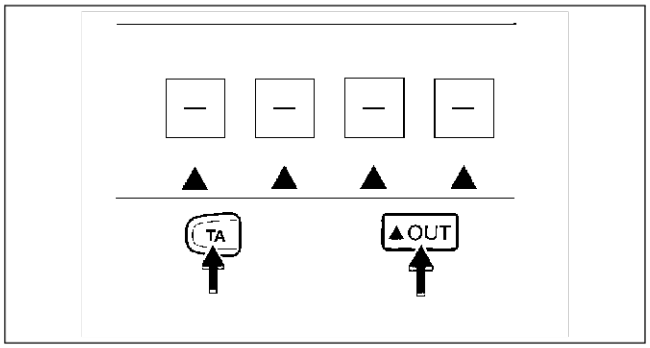

YLE8124W018

5. Input the selected code number as follows. Press “RETURN” button for the first digit, “ROUTE” for the second, “ICON” for the third, and “IN” for the last digit. Input the number **within 10 seconds**. If the display is deleted, repeat the procedure from step 1.

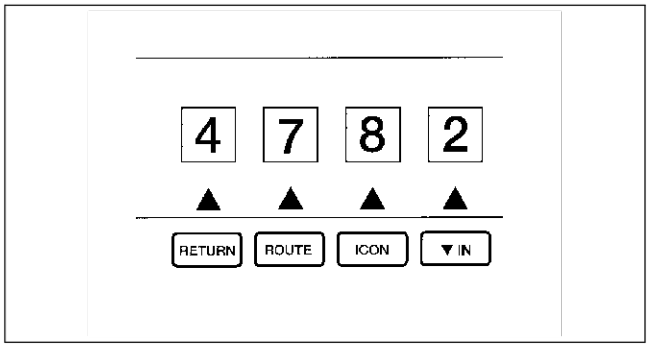

YLE8124W019

T

6. With the code number displayed, press and hold the “TA” and “OUT” buttons for **approximately 2 seconds**. “CODE” will be displayed for **approximately 1 seconds**. After it disappears, the code number is set.
7. If “ERROR” appears on the display, repeat the procedure from Step 1. If input error is repeated three times, turn the ignition switch to LOCK position and repeat the procedure from Step 1.

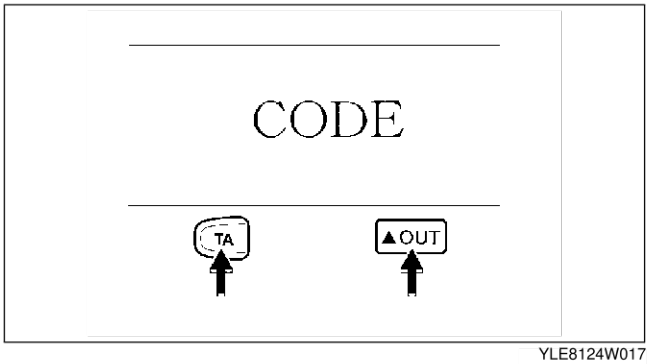

YLE8124W017

Canceling the Code Number

Complete each step (Steps 1–3) **within 10 seconds** or the canceling procedure will be canceled.

1. Turn the ignition switch to ACC position and then turn off the car-navigation unit.
2. Press and hold the “TA” and “OUT” buttons simultaneously for **approximately 2 seconds** until “CODE” appears on the display.

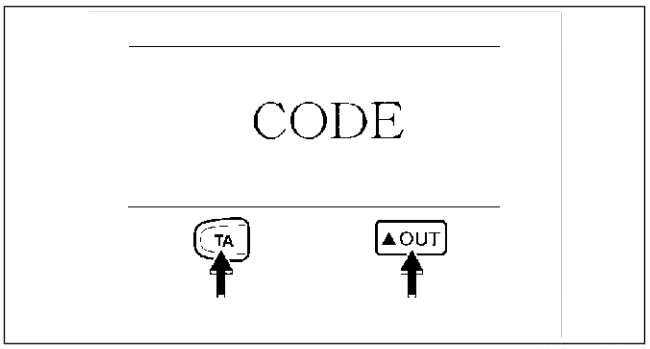

YLE8124W017

3. Press the “TA” and “OUT” buttons again until bars appear on the display.

Caution

- **Three consecutive errors, including turning the ignition switch to LOCK position and disconnecting the car-navigation unit, will activate the anti-theft system and render the car-navigation unit completely inoperative.**

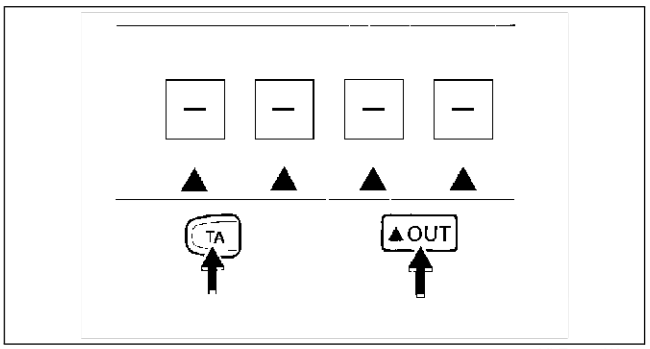

YLE8124W018

4. Input the current code number as follows. Press “RETURN” button for the first digit, “ROUTE” for the second, “ICON” for the third, and “IN” for the last digit. Input the number **within 10 seconds**. If the display is deleted, repeat the procedure from Step 1.

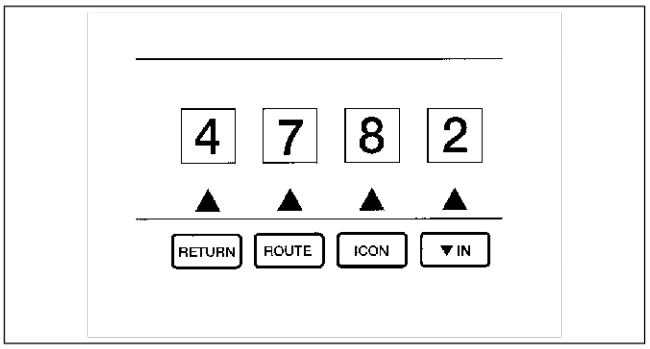

YLE8124W019

5. With the code number displayed, press and hold the “TA” and “OUT” buttons for **approximately 2 seconds**. “CODE” will be displayed for **approximately 1 seconds**. After it disappears, the code number is canceled.
6. If “ERROR” appears on the display, repeat the procedure from Step 4.

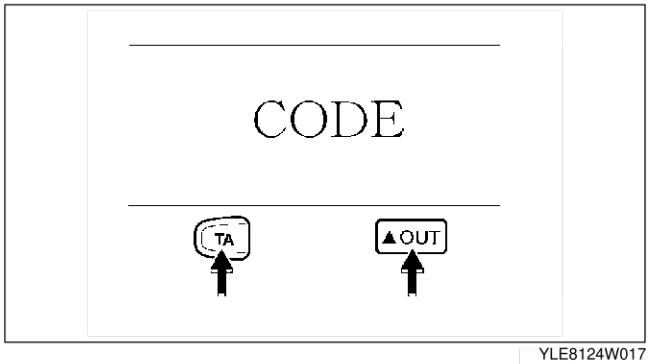

YLE8124W017

Canceling Anti-theft Operation

Properly input the selected code number to deactivate the anti-theft system and resume normal audio operation.

1. Turn the ignition switch to ACC position. (“CODE” will flash on the display.)
2. Press and hold the “TA” and “OUT” buttons simultaneously for **approximately 2 seconds** until bars appears on the display.

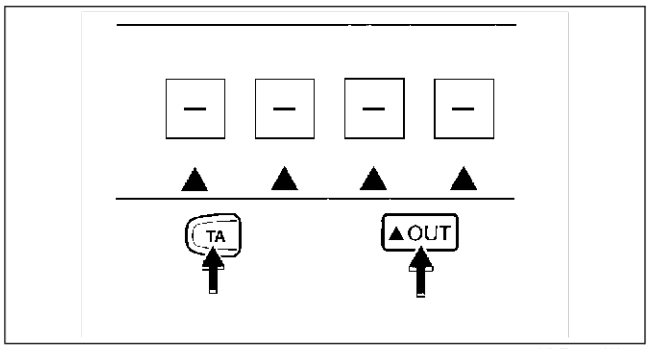

YLE8124W018

3. Input the selected code number as follows. Press “RETURN” button for the first digit, “ROUTE” for the second, “ICON” for the third, and “IN” for the last digit. Input the number **within 10 seconds**. If the display is deleted, repeat the procedure from Step 1.

Caution

- **Three consecutive errors, including turning the ignition switch to LOCK position and disconnecting the audio unit, will activate the anti-theft system and render the car-navigation unit completely inoperative.**

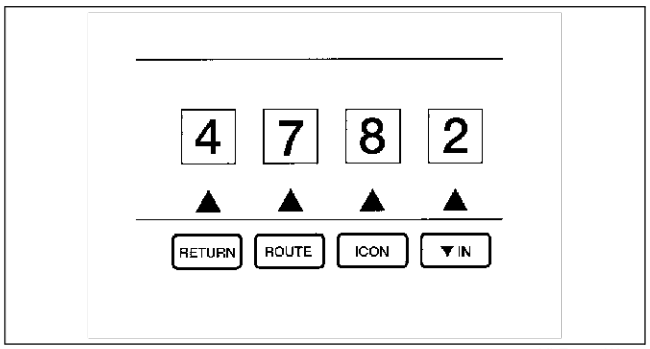

YLE8124W019

4. With the code number displayed, press and hold the “TA” and “OUT” buttons for **approximately 2 seconds**.
5. If “ERROR” appears on the display, repeat the procedure from Step 1.

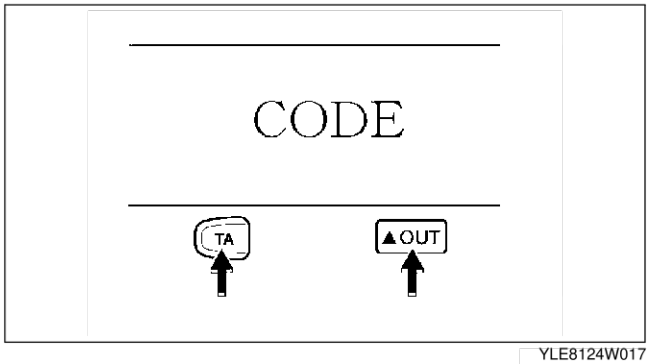

YLE8124W017

End Of Sec

T

GPS ANTENNA REMOVAL/INSTALLATION

AME812466936W01

1. Disconnect the negative battery cable.
2. Remove the instrument cluster.
3. Remove in the order indicated in the table.

1	Screw
2	Connector
3	GPS antenna

4. Install in the reverse order of removal.

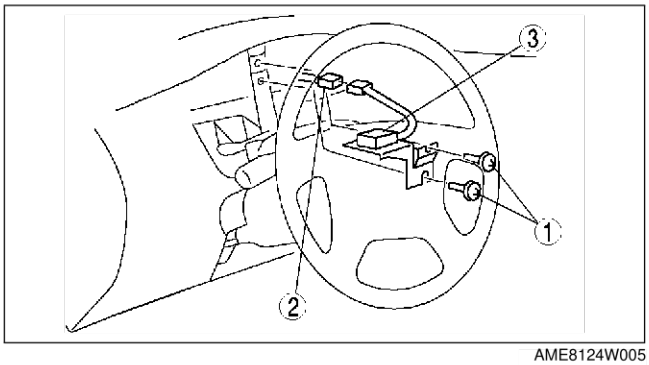

AME8124W005

End Of Sec

AUDIO CONTROL SWITCH REMOVAL/INSTALLATION

AME812400148W01

1. Disconnect the negative battery cable.
2. Remove the driver-side air bag module.
3. Remove the audio control switch bracket. (Lever type)
4. Remove in the order indicated in the table.

1	Screw
2	Connector
3	Audio control switch

5. Install in the reverse order of removal.

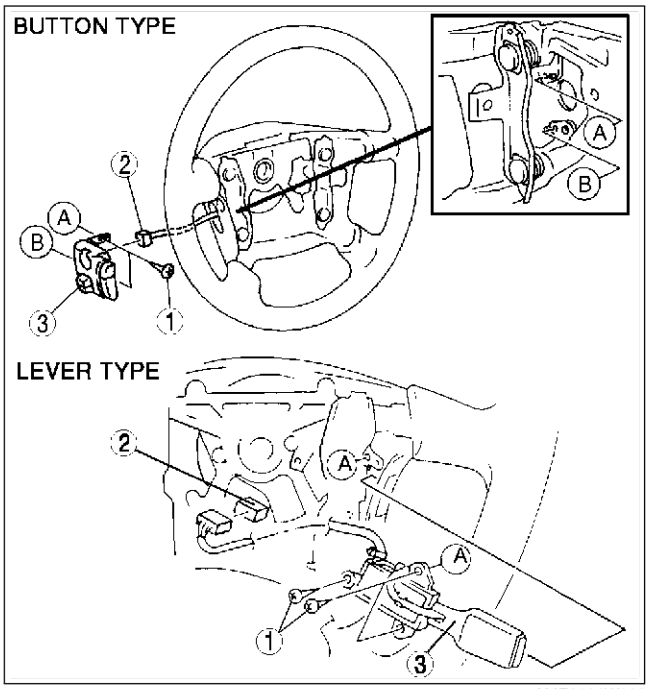

AME8124W008

End Of Sec

AUDIO CONTROL SWITCH INSPECTION

AME812400148W02

Button Type

1. Measure the resistance and inspect for continuity between the audio control switch terminals using an ohmmeter.
   - If not as specified, replace the audio control switch.

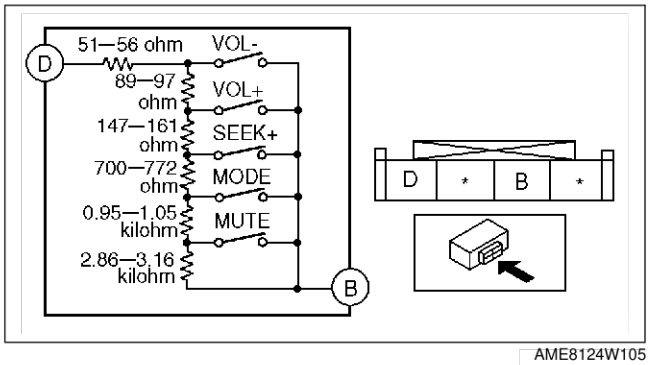

AME8124W105

: Resistance

Switch position	Terminal	
	B	D
VOL- switch hold at on		R_1
VOL+ switch hold at on		R_2
SEEK+ switch hold at on		R_3
MODE switch hold at on		R_4
MUTE switch hold at on		R_5
Neutral		R_6

R_1: 51—56 ohm R_2: 140—153 ohm
R_3: 287—314 ohm R_4: 0.99—1.08 kilohm
R_5: 1.94—2.13 kilohm R_6: 4.80—5.29 kilohm

AME8124W102

Lever Type

1. Measure the resistance between the audio control lever terminals using an ohmmeter.
   - If not as specified, replace the audio control lever.

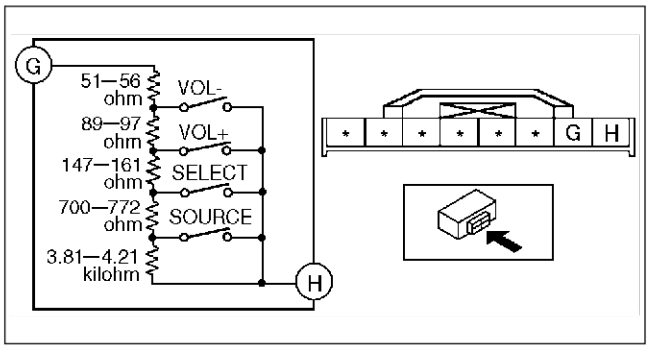

AME8124W003

: Resistance

Switch position	Terminal	
	G	H
SOURCE switch hold at on		R_1
SELECT switch hold at on		R_2
VOL+ switch hold at on		R_3
VOL- switch hold at on		R_4
Neutral		R_5

R_1: 0.99—1.03 kilohm R_2: 287—314 ohm R_3: 140—153 ohm
R_4: 51—56 ohm R_5: 4.80—5.24 kilohm

AME8124W004

End Of Sta

T

CRUISE CONTROL SYSTEM

CRUISE ACTUATOR REMOVAL/INSTALLATION

AME812866310W01

1. Disconnect the negative battery cable.
2. Remove the engine cover.
3. Remove in the order indicated in the table.

1	Cover
2	Actuator cable (See T–80 ACTUATOR CABLE REMOVAL) (See T–81 ACTUATOR CABLE INSTALLATION)
3	Nut
4	Connector
5	Screw
6	Bracket
7	Short cord (See T–78 Short Cord Installation Note)
8	Cruise actuator

4. Install in the reverse order of removal.

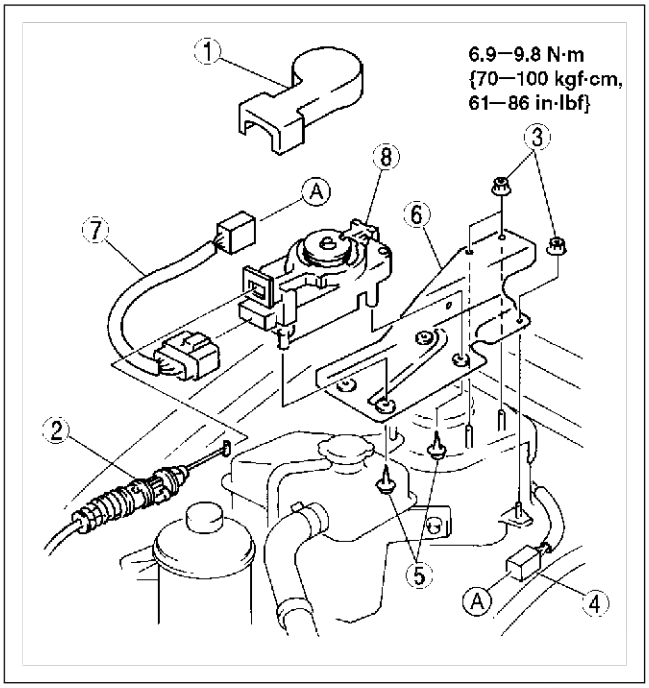

AMU0120W101

Short Cord Installation Note

1. Install the connector of the short cord to the bracket.

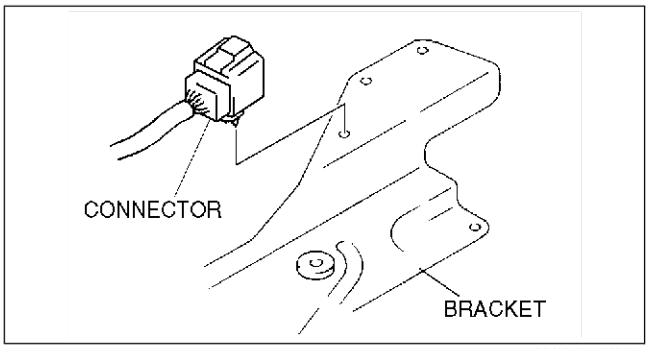

AMU0120W102

End Of Sie

CRUISE ACTUATOR INSPECTION

AME812866310W02

1. Disconnect the cruise actuator connector.
2. Measure the voltage, continuity and resistance at the cruise actuator terminals as indicated below.
   - If not as specified, inspect the parts listed under “Action.”
   - If the parts and wiring harnesses are okay but the system still does not work properly, replace the cruise actuator.

Terminal Voltage Table (Reference)

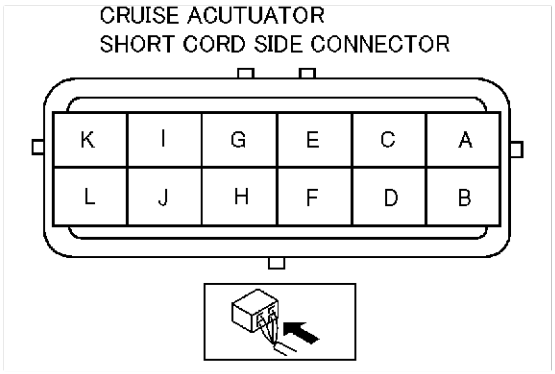

AME8128W001

Terminal	Signal	Connected to	Test condition		Voltage (V) /Continuity	Action
A	Vehicle speed	Instrument cluster	1. Ignition switch at ON position and cruise control main switch held at on. 2. Front tire rotating		Alternates below 1.0 and 5	• Inspect METER 10 A fuse • Inspect instrument cluster • Inspect related harness
B	Test	DLC	Under any condition: inspect for continuity to DLC terminal FSD		Yes	—
C	Brake switch on/off	Brake switch	Depress brake pedal		B+	• Inspect brake switch • Inspect related harness
			Replace brake pedal		Below 1.0	
D	Cruise control main switch input	Cruise control switch	Inspect for continuity to ground	Cruise control main switch held at on	Yes	• Inspect cruise control switch (See T–84 CRUISE CONTROL SWITCH INSPECTION) • Inspect related harness
				Cruise control main switch off	No	
E	O/D control	TCM	Ignition switch at ON position		B+	• Inspect TCM • Inspect related harness
F	Selector lever position	TR switch	Inspect for continuity to ground	Selector lever at N or P position	Yes	• Inspect TR switch • Inspect starter • Inspect related harness
				Other	No	
G	Cruise set indicator light output	Cruise set indicator light	Ignition switch at ON position		B+	• Inspect METER 10 A fuse • Inspect instrument cluster • Inspect related harness
			Ignition switch at LOCK position or ACC position		Below 1.0	
H	—	—	—		—	—

T

Terminal	Signal	Connected to	Test condition		Voltage (V) /Continuity	Action
I	Cruise actuator ground	GND	Under any condition: inspect for continuity to ground		Yes	• Inspect GND
J	Cruise control switch position	Cruise control switch	Inspect for resistance	SET/COAST switch held at on	Approx. 198 ohms	• Inspect cruise control switch (See T–84 CRUISE CONTROL SWITCH INSPECTION) • Inspect related harness
				RESUME/ACCEL switch held at on	Approx. 68 ohms	
				CANCEL switch held at on	Approx. 418 ohms	
K	Brake switch on/off	Brake switch 2	Ignition switch at ON position	Depress brake pedal	Below 1.0	• Inspect brake switch 2 • Inspect related harness
				Other	B+	
L	IG1	METER 10 A fuse	Ignition switch at ON position		B+	• Inspect METER 10 A fuse • Inspect related harness
			Ignition switch at LOCK position or ACC position		Below 1.0	

End Of Sie

ACTUATOR CABLE REMOVAL

AME812866311W01

1. Remove the cover from the cruise actuator.
2. Remove the plug hole plate. (AJ) (See B2–7 TIMING CHAIN REMOVAL/INSTALLATION.)
3. Remove the engine cover. (MZR-CD (RF Turbo)) (See B4–17 TIMING BELT REMOVAL/INSTALLATION.)
4. Move the throttle in the direction of the arrow and hold.
5. Remove the end fitting of the actuator cable from the throttle.

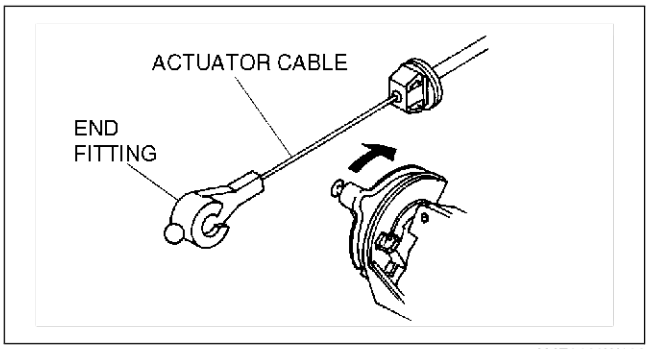

AME0120W103

6. Squeeze the hooks of the grommet, and remove the actuator cable.

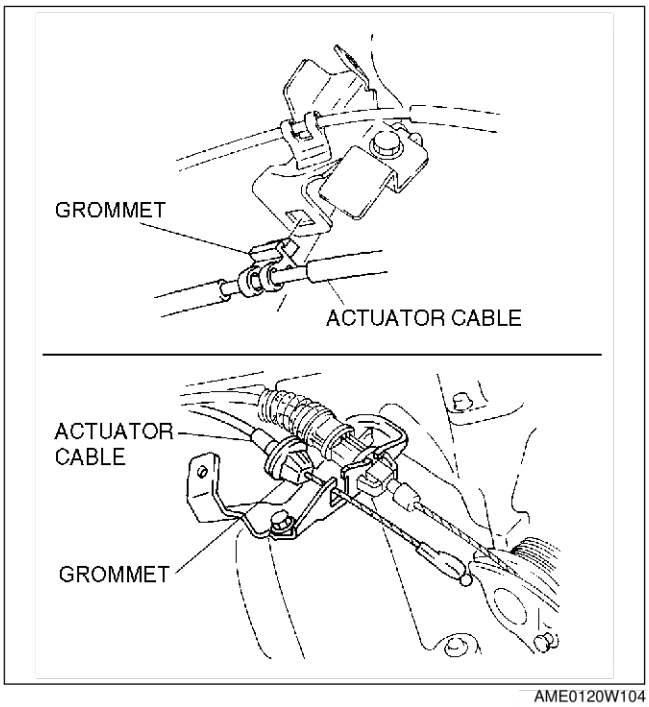

AME0120W104

7. Remove the end fitting of the actuator cable from the cruise actuator.

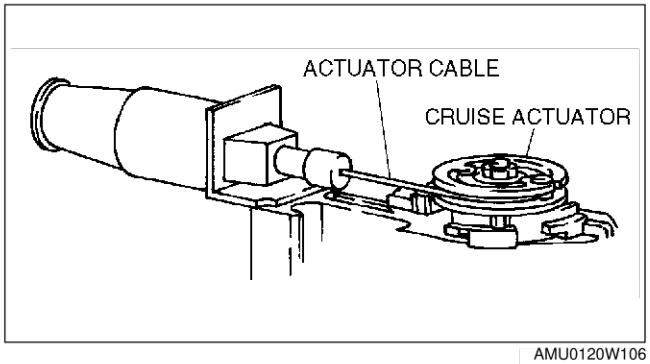

AMU0120W106

8. Squeeze the hooks of the grommet, and remove it from the cruise actuator.
9. Remove the actuator cable.

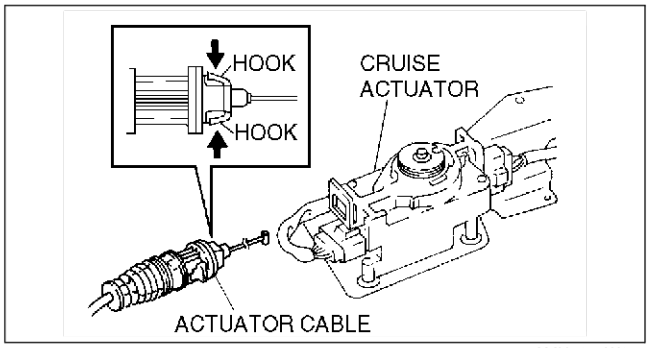

AMU0120W105

End Of Sub

ACTUATOR CABLE INSTALLATION

AME812866311W02

1. Slide the lock lever in the direction shown by the arrow to unlock the adjuster.

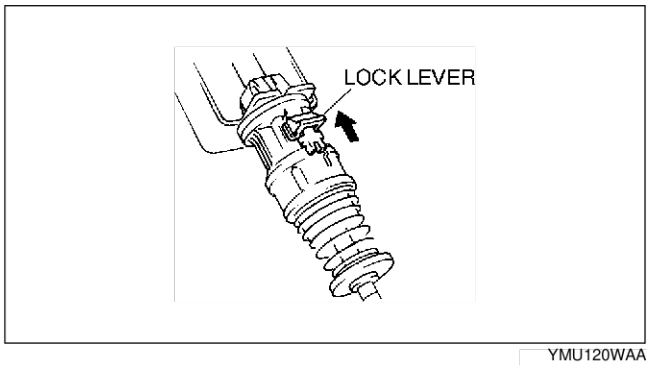

YMU120WAA

2. Turn the ratchet ring to release lock in the direction shown by the arrow.

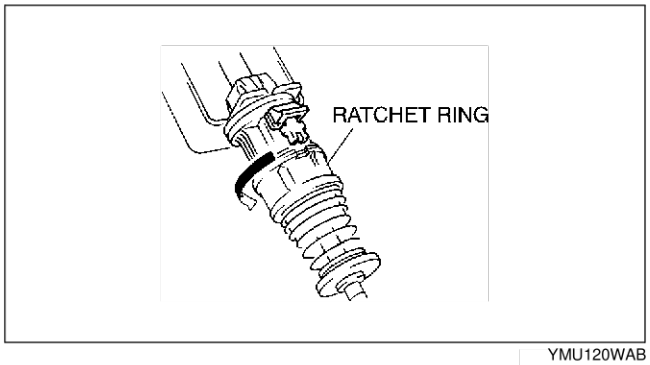

YMU120WAB

T

3. Install the actuator cable to the cruise actuator.

Caution
- **Due to the possibility of actuator cable damage, make sure there is no twisting in the cable when installing.**

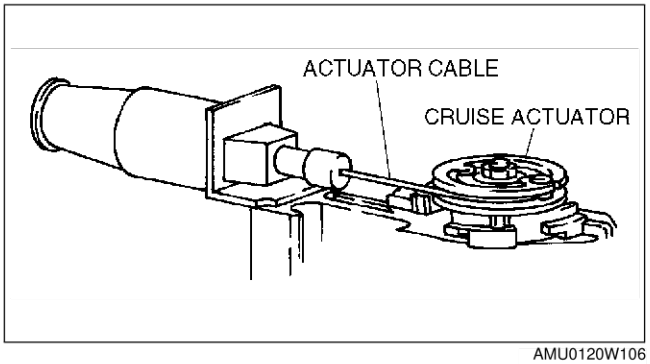

AMU0120W106

4. Pass the actuator cable under the accelerator cable.

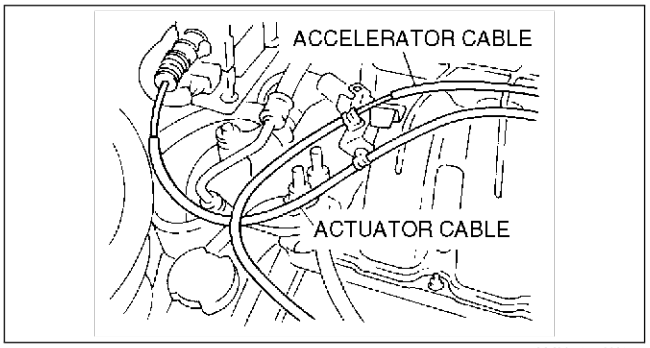

AMU0120W107

5. Install the grommets to the cable bracket.

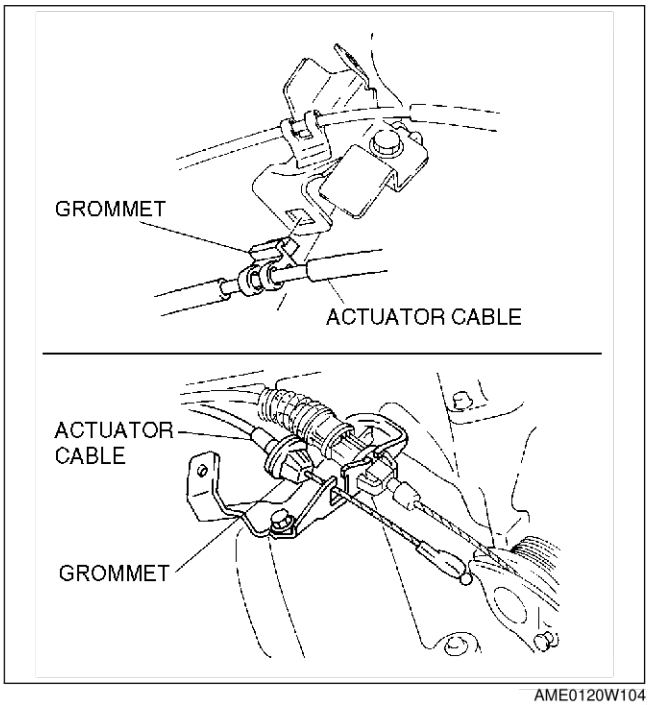

AME0120W104

6. Move the throttle in the direction of the arrow.
7. Install the end fitting of the actuator cable to the throttle.

Caution
- **Due to the possibility of actuator cable damage, make sure there is no twisting in the cable when installing.**

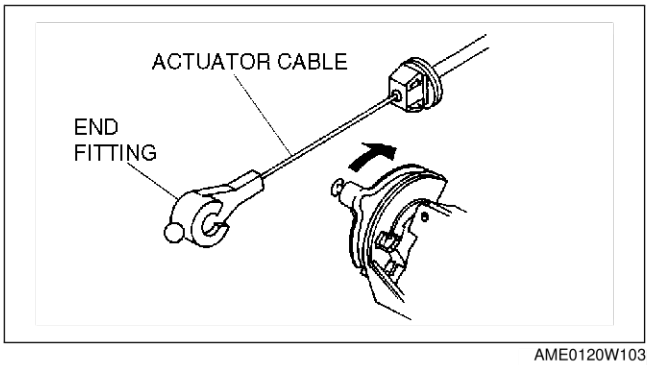

AME0120W103

8. To adjust the free play, push or pull the actuator cable directly behind the spring **two times**.

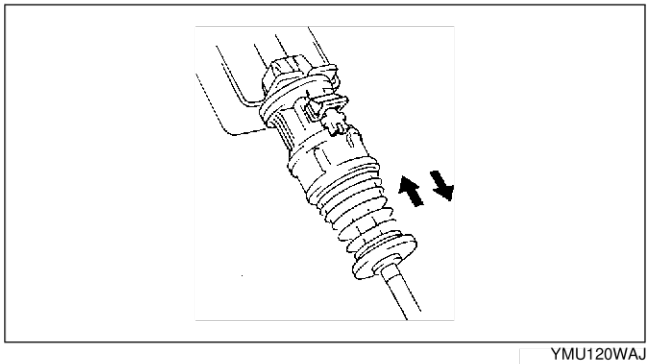

YMU120WAJ

9. Turn the ratchet ring in the direction shown by the arrow to lock it.

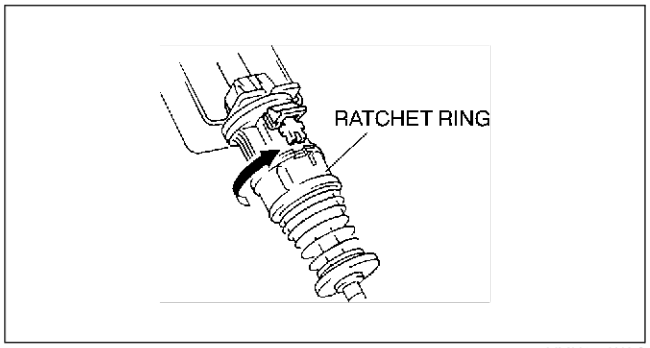

YMU120WAC

10. Slide the lock lever in the direction shown by the arrow to lock the adjuster.
11. Install the cover to the cruise actuator.
12. Install the plug hole plate. (AJ) (See B2–7 TIMING CHAIN REMOVAL/INSTALLATION.)
13. Install the engine cover. (MZR-CD (RF Turbo)) (See B4–17 TIMING BELT REMOVAL/INSTALLATION.)

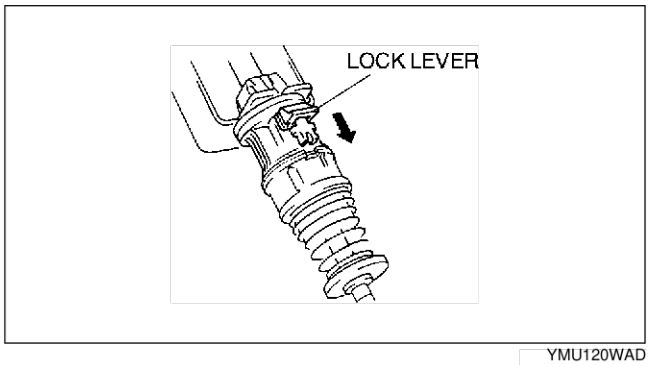

YMU120WAD

End Of Sie

CRUISE CONTROL SWITCH REMOVAL/INSTALLATION

AME812866341W01

1. Disconnect the negative battery cable.
2. Remove the driver-side air bag module.
3. Remove the cruise control switch bracket.
4. Remove in the order indicated in the table.

1	Screw
2	Connector
3	Cruise control switch

5. Install in the reverse order of removal.

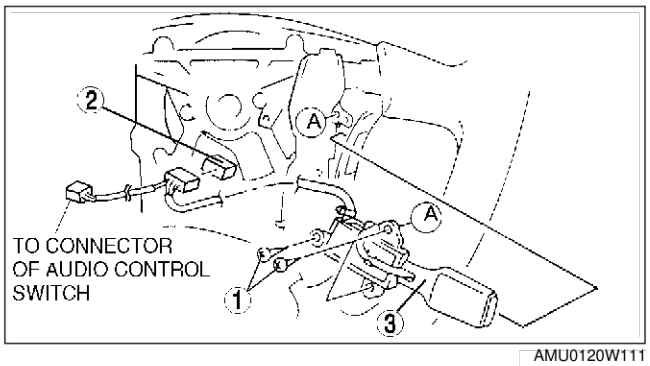

AMU0120W111

End Of Sie

T

CRUISE CONTROL SWITCH INSPECTION

AME812866341W02

1. Disconnect the negative battery cable.
2. Remove the driver-side air bag module.
3. Disconnect the cruise control switch connector.
4. Measure the resistance and inspect for continuity between the cruise control switch terminals using an ohmmeter.
   - If not as specified, replace the cruise control switch.

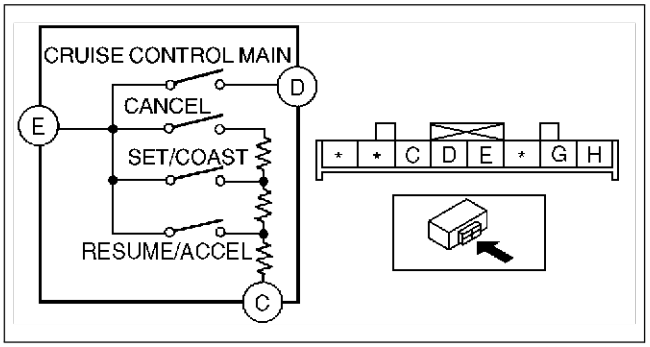

AME8128W002

○—○ : Continuity ○WW○ : Resistance

Switch position	Terminal		
	E	D	C
Cruise control main switch held at on	○	○	
RESUME/ACCEL switch held at on	○	WW	○ R1
SET/COAST switch held at on	○	WW	○ R2
CANCEL switch held at on	○	WW	○ R3
Neutral			

R1: 67—70 ohms R2: 194—202 ohms R3: 410—427 ohms

AME8128W402

End Of Sie

AIR BAG SYSTEM

CLOCK SPRING INSPECTION

AME813066123W01

1. Inspect for continuity between the clock spring terminals using an ohmmeter.
   - If not as specified, replace the clock spring.

○—○ : Continuity

Test condition	Terminal															
	1C	1D	2A	2C	2D	2E	2G	2H	3A	3B	4A	4C	4D	4E	4G	4H
Under any condition	○	○							○	○						
			○								○					
				○								○				
					○								○			
						○								○		
							○								○	
								○								○

AMU0810W101

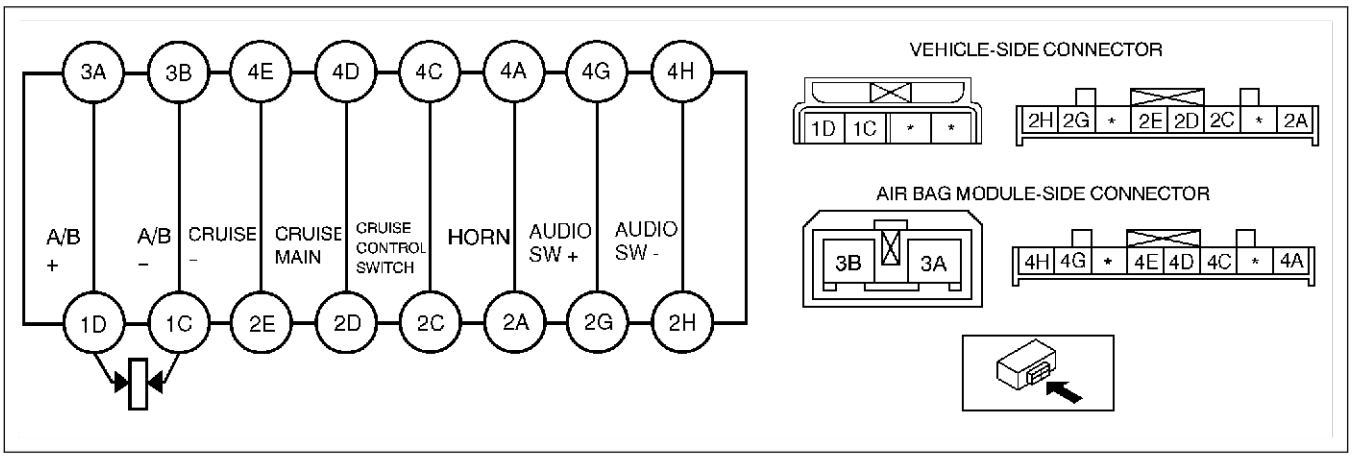

AME8130W101

Note

- When the vehicle-side connector clock spring is disconnected, terminals 1C and 1D are shorted to prevent unexpected deployment of the air bag module. When it is connected, the terminals are open.

End Of Sta

T

ON-BOARD DIAGNOSTIC [IMMOBILIZER SYSTEM]

FOREWORD

AME817067000W01

- Perform this procedure for L3 and MZR-CD (RF Turbo) engine for European (L.H.D. U.K.) specs. The procedure for other vehicles has not been changed from the Mazda MPV Workshop Manual (1666-1*-99F).

Caution

- **When the engine does not start or stalls and the following DTCs are not indicated, go to engine symptom troubleshooting.**

Note

- If engine condition is normal but light stays on, inspect for short circuit between security light and immobilizer unit connector terminal M. Repair or replace the wiring harness if necessary.

1. Turn the ignition switch to START position **for 2 seconds**, then back to ON position.
2. Wait for **2 minutes**.
3. Verify the security light condition and read the DTC if indicated.
4. Verify the DTC with WDS or equivalent.
5. If the DTC is indicated, go to troubleshooting referring to the DTC table.

End Of Se

DTC TABLE

AME817067000W02

DTC	Output pattern	Description	Page
01		ID number unregistered in immobilizer unit is input after ignition switch is turned to ON position or engine cranking.	(See T–87 DTC 01)
02		ID number format error (voltage range, frequency)	(See T–87 DTC 02)
03		ID number is not input into immobilizer unit after ignition switch is turned to ON position or cranking engine.	(See T–87 DTC 03)
11	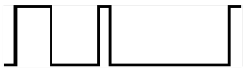	Coil or wiring harness between immobilizer unit and coil is open circuit.	(See T–88 DTC 11)
21		Code word/ID number stored in immobilizer unit EEPROM cannot be read.	(See T–88 DTC 21)
24	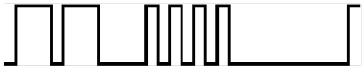	Open or short circuit in wiring harness between immobilizer unit and PCM.	(See T–88 DTC 24)
30	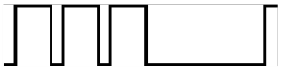	Immobilizer unit—PCM communication error	(See T–89 DTC 30)

Note

- Perform the following if the security light stays on:
  - — If engine stalls, go to symptom troubleshooting “NO.11 ENGINE STALLS/QUITS, ENGINE RUNS ROUGH, MISSES, BUCK/JERK, HESITATION/STUMBLE, SURGES.”
  - — If engine will not start, go to symptom troubleshooting “NO.6 CRANKS NORMALLY BUT WILL NOT START.”
  - — If engine condition is normal but light stays on, inspect for continuity between the following wiring harness and body ground: security light and immobilizer unit connector terminal M. Repair or replace the wiring harness.

DTC 01

AME817067000W03

DTC 01	**ID number unregistered in immobilizer unit is input after ignition switch is turned to ON position or engine cranking.**
POSSIBLE CAUSE	• ID number is unregistered in immobilizer unit.

Diagnostic procedure

STEP	INSPECTION		ACTION
—	—	—	Go to ID number input procedure. (See T–58 Key Replacement or Addition)

End Of Step

DTC 02

AME817067000W04

DTC 02	**ID number format error (voltage range, frequency)**
POSSIBLE CAUSE	• Defective transponder in the key

Diagnostic procedure

STEP	INSPECTION		ACTION
—	—	—	Dispose of defective key. Duplicate key if necessary. (See T–58 Key Replacement or Addition)

End Of Step

DTC 03

AME817067000W05

DTC 03	**ID number is not input into immobilizer unit after ignition switch is turned to ON position or cranking engine.**
POSSIBLE CAUSE	• No transponder in the key • Defective transponder in the key (ID number is not output.) • Defective coil at steering lock • Defective wiring harness between coil and immobilizer unit
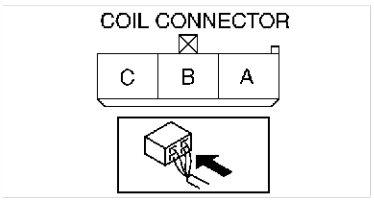	

Diagnostic procedure

STEP	INSPECTION		ACTION
1	• Does security light indicate DTC 11?	Yes	Go to DTC 11.
		No	Go to next step.
2	• Does security light indicate DTC 30?	Yes	Go to DTC 30.
		No	Go to next step.
3	**INSPECT FOR OTHER PROPER KEYS** • Does engine start with other proper keys?	Yes	Dispose of defective key. Duplicate key if necessary. (See T–58 Key Replacement or Addition)
		No	Go to next step.
4	**INSPECT COIL CIRCUIT FOR SHORT TO GND OR COIL CIRCUIT FOR CONTINUITY** • Disconnect the coil connector. • Inspect for short circuits between coil connector terminals A and C and ground, and also between coil connector terminals A and C. • Is there a short?	Yes	Repair the wiring harness connected to terminals A and/or C.
		No	Troubleshooting is completed.

End Of Step

T

DTC 11

AME817067000W06

DTC 11	Coil or wiring harness between immobilizer unit and coil is open circuit.
POSSIBLE CAUSE	• Open circuit in coil • Poor connection of coil connector • Poor connection of immobilizer unit • Defective wiring harness between immobilizer unit and coil

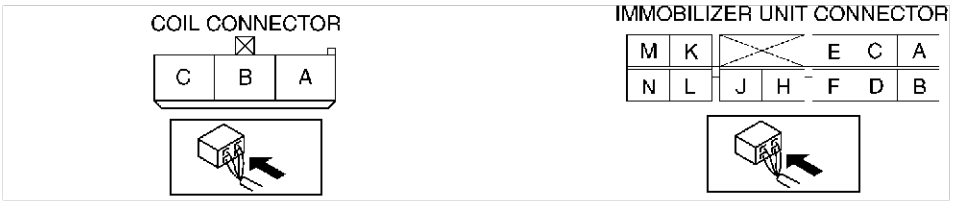

Diagnostic procedure

STEP	INSPECTION		ACTION
1	**INSPECT CONNECTOR CONNECTION** • Is connector of coil or immobilizer unit connected securely?	Yes	Go to next step.
		No	Connect connector securely.
2	**INSPECT COIL CIRCUIT FOR CONTINUITY** • Is there continuity between coil terminals A and C?	Yes	Go to next step.
		No	Replace coil.
3	**INSPECT COIL CIRCUIT FOR OPEN** • Disconnect coil connector and immobilizer unit connector. • Inspect if either of the following wiring harnesses has continuity: — Immobilizer unit D to coil C, and immobilizer unit F to coil A — Immobilizer unit D to coil A, and immobilizer unit F to coil C **Note** • Vehicle harness which is connected to immobilizer unit terminals D and F, uses a twisted pair wire. Because twisted pair wire does not have polarity, immobilizer unit connector terminal D may be connected to coil connector terminal A or C. Likewise, immobilizer unit connector terminal F may be connected to coil connector terminal A or C.	Yes	Replace immobilizer unit and reprogram immobilizer system. (See T–61 Immobilizer Unit Replacement)
		No	Repair wiring harness between coil and immobilizer unit.

End Of Sie

DTC 21

AME817067000W07

DTC 21	Code word/ID number stored in immobilizer unit EEPROM cannot be read.
POSSIBLE CAUSE	• Defective immobilizer unit

Diagnostic procedure

STEP	INSPECTION		ACTION
—	**INSPECT IMMOBILIZER UNIT** • Turn ignition switch from LOCK position to START position **for 2 seconds**. • Does security light indicate DTC 21 again?	Yes	Replace immobilizer unit and reprogram immobilizer system. (See T–61 Immobilizer Unit Replacement)
		No	Immobilizer system is okay.

End Of Sie

DTC 24

AME817067000W08

DTC 24	Open or short circuit in wiring harness between immobilizer unit and PCM
POSSIBLE CAUSE	• Defective immobilizer unit • Defective PCM • Poor connection of connector • Defective wiring harness

DTC 24	Open or short circuit in wiring harness between immobilizer unit and PCM

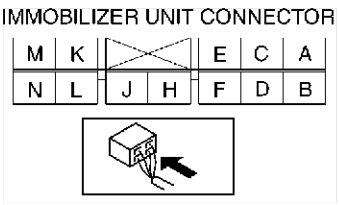

Diagnostic procedure

STEP	INSPECTION		ACTION
1	**INSPECT CONNECTOR CONNECTION** • Are both immobilizer unit and PCM connectors connected properly?	Yes	Go to next step.
		No	Connect connectors properly.
2	**INSPECT COMMUNICATION CIRCUIT FOR CONTINUITY** • Disconnect immobilizer unit and PCM connectors. • Is there continuity between immobilizer unit connector terminal A and PCM terminal 2Q (L3), 59 (AJ) or 54 (MZR-CD (RF Turbo))?	Yes	Go to next step.
		No	Repair wiring harness between PCM and immobilizer unit.
3	**INSPECT IMMOBILIZER UNIT FOR SHORT TO GND** • Is there continuity between immobilizer unit connector terminal A and ground?	Yes	Repair short circuit in wiring harness between PCM and immobilizer unit.
		No	Go to next step.
4	**INSPECT COMMUNICATION CIRCUIT** • Connect PCM connector. • Turn ignition switch to ON position. • Measure voltage at immobilizer unit connector terminal A. • Is voltage **more than 10 V**?	Yes	Replace immobilizer unit and reprogram immobilizer system. (See T–61 Immobilizer Unit Replacement) **Note** • Confirm that voltage at immobilizer unit connector terminal L is **more than 10 V** when turning ignition switch to ON position after repairing malfunction of DTC 24. If not as specified, repair wiring harness between ENGINE 10 A fuse and immobilizer unit.
		No	Replace PCM and reprogram immobilizer system. (See T–62 PCM Replacement) **Note** • Confirm that voltage at immobilizer unit connector terminal L is **more than 10 V** when turning ignition switch to ON position after repairing malfunction of DTC 24. If not as specified, repair wiring harness between ENGINE 10 A fuse and immobilizer unit.

End Of Sie

DTC 30

AME817067000W09

DTC 30	Immobilizer unit—PCM communication error
POSSIBLE CAUSE	• Defective immobilizer unit • Defective PCM

Diagnostic procedure

STEP	INSPECTION		ACTION
—	**INSPECT INNER CIRCUIT OF IMMOBILIZER UNIT** • Replace immobilizer unit and reprogram immobilizer system. (See T–61 Immobilizer Unit Replacement) • Does engine start?	Yes	Immobilizer unit was defective.
		No	Replace PCM and reprogram immobilizer system. (See T–62 PCM Replacement)

End Of Sie

T

ON-BOARD DIAGNOSTIC [AUDIO]

STARTING PROCEDURE FOR ON-BOARD DIAGNOSTIC TEST MODE

AME817566900W01

Note
- All DTCs displayed in the on-board diagnostic test mode should be entered in the Audio Repair Order Form.

1. Turn the ignition switch to the ACC or ON position.
2. First press the POWER button, then simultaneously press the AM button and CLOCK button for **2 seconds or more**.

1	AM button
2	CLOCK button
3	SEEK button (with RDS)
4	SEEK button (without RDS)
5	POWER button (with RDS)
6	POWER button (without RDS)

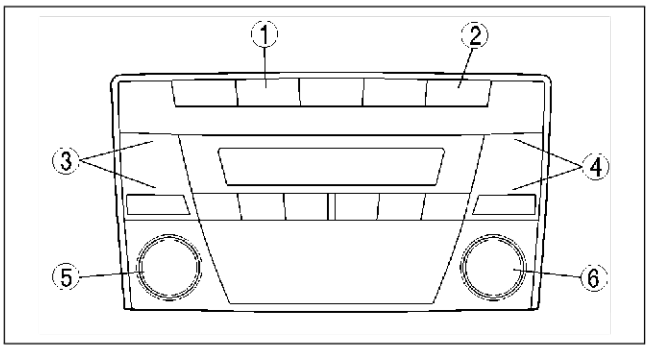

AME8175W006

Note
- If several DTCs are in the memory, they can be displayed by the SEEK button.

3. To stop the on-board diagnostic test mode, turn the ignition switch to the LOCK position.

End Of Ste

SUPPLIER IDENTIFICATION PROCEDURE

AME817566900W02

Note
- When asking the supplier (service center) for repair or replacement, verify which supplier the module belongs to and enter in the Audio Repair Order Form.

Identification With Printed Numbers/Label
Base unit

1. To identify the supplier name, compare the leftmost number of the ID code (4 digits), printed on the upper right corner of the LCD, with the table below.

Audio ID number	Supplier name
1	Panasonic
2	Clarion
4	FMS Audio

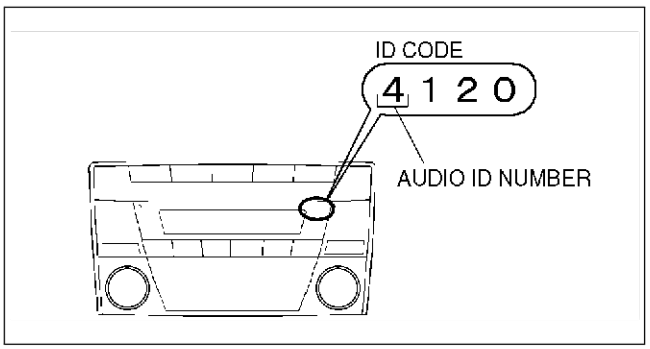

AME8175W005

Upper/lower module

1. Remove the audio unit.
2. Verify the supplier name written on the label attached on each module.

Identification With On-board Diagnostic Test Mode

1. Start the on-board diagnostic test mode.
2. Verify the part number and supplier code displayed in the LCD.

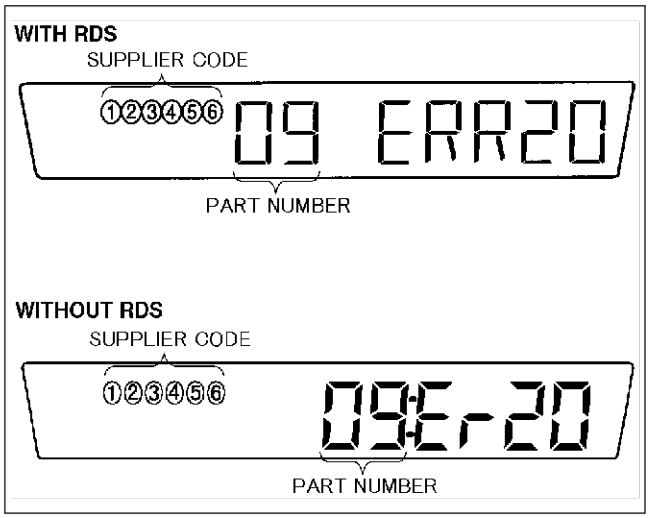

AME8175W002

Note

- When no DTCs are in the memory, part numbers and supplier codes will not be displayed.

Part number	Part name
00	Cassette deck (lower module)
03	CD player (upper module)
05	CD changer (external type)
06	CD changer (upper module)
07	MD player (lower module)
09	Base unit

Supplier code	Supplier name
1	FMS Audio
2	Panasonic
3	Clarion

End Of Sie

DTC CLEARING PROCEDURE

AME817566900W03

1. Start the on-board diagnostic test mode.
2. First press the POWER button, then simultaneously press AUDIO CONT button for **2 seconds or more**.

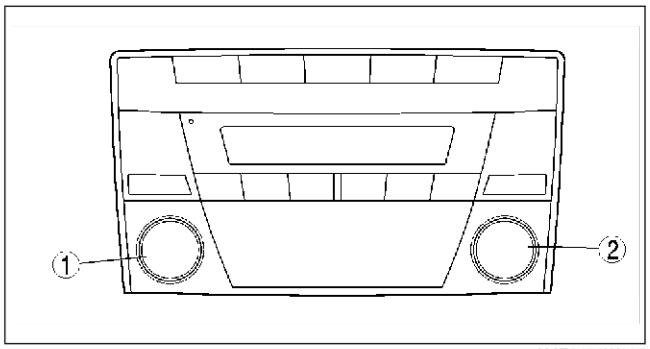

AME8175W007

1	POWER button (with RDS)
	AUDIO CONT button (without RDS)
2	AUDIO CONT button (with RDS)
	POWER button (without RDS)

Caution

- **Before clearing the DTCs, be sure to enter all of them displayed in the on-board diagnostic test mode in the Audio Repair Order Form.**

3. To stop the on-board diagnostic test mode, turn the ignition switch to the LOCK position.

End Of Sie

T

DTC TABLE

AME817566900W04

Screen display		Malfunction location	Page
DTC	Output signal		
09 ERR22 or 09:Er22	—	Base unit (peripheral circuit)	(See T–93 DTC 09 ERR22 OR 09:ER22)
09 ERR20 or 09:Er20	—	Power supply circuit of base unit	(See T–93 DTC 09 ERR20 OR 09:ER20)
00 ERR10 or 00:Er10	—	Cassette deck—base unit communication line	(See T–94 DTC 00 ERR10 OR 00:ER10)
03 ERR10 or 03:Er10	—	CD player—base unit communication line	(See T–94 DTC 03 ERR10 OR 03:ER10)
05 ERR10 or 05:Er10	—	CD changer (external type)—base unit communication line	(See T–95 DTC 05 ERR10 OR 05:ER10)
06 ERR10 or 06:Er10	—	CD changer (upper module)—base unit communication line	(See T–95 DTC 06 ERR10 OR 06:ER10)
07 ERR10 or 07:Er10	—	MD player—base unit communication line	(See T–96 DTC 07 ERR10 OR 07:ER10)
03 ERR01 or 03:Er01	—	CD player	(See T–96 DTC 03 ERR01 OR 03:ER01)
03 ERR02 or 03:Er02	CHECK*1 CD*2	CD player	(See T–97 DTC 03 ERR02 OR 03:ER02)
03 ERR07 or 03:Er07	CHECK*1 CD*2	CD player	(See T–97 DTC 03 ERR07 OR 03:ER07)
00 ERR01 or 00:Er01	—	Cassette deck	(See T–97 DTC 00 ERR01 OR 00:ER01)
00 ERR03 or 00:Er03	—	Cassette deck	(See T–98 DTC 00 ERR03 OR 00:ER03)
00 ERR04 or 00:Er04	CHECK*1 TAPE*2	Cassette tape	(See T–98 DTC 00 ERR04 OR 00:ER04)
05 ERR01 or 05:Er01	—	CD changer (external type)	(See T–99 DTC 05 ERR01 OR 05:ER01)
05 ERR07 or 05:Er07	CHECK*1 CD*2	CD changer (external type)	(See T–99 DTC 05 ERR07 OR 05:ER07)
06 ERR01 or 06:Er01	—	CD changer (upper module)	(See T–100 DTC 06 ERR01 OR 06:ER01)
06 ERR02 or 06:Er02	CHECK*1 CD*2	CD changer (upper module)	(See T–100 DTC 06 ERR02 OR 06:ER02)
06 ERR07 or 06:Er07	CHECK*1 CD*2	CD changer (upper module)	(See T–101 DTC 06 ERR07 OR 06:ER07)
07 ERR01 or 07:Er01	—	MD player	(See T–101 DTC 07 ERR01 OR 07:ER01)
07 ERR02 or 07:Er02	CHECK*1 MD*2	MD player	(See T–102 DTC 07 ERR02 OR 07:ER02)
07 ERR07 or 07:Er07	CHECK*1 MD*2	MD player	(See T–102 DTC 07 ERR07 OR 07:ER07)
NO ERR or no Err	—	No stored DTCs	—

*1,*2: When an error occurs, the error messages are displayed three times in the order of *1 and *2, respectively.

End Of Sie

DTC 09 ERR22 OR 09:ER22

AME817566900W05

DTC 09 ERR22 or 09:Er22	Base unit (peripheral circuit)
DETECTION CONDITION	• Base unit detects malfunction in its inner circuit (related to tuner).
POSSIBLE CAUSE	• Base unit malfunction

Diagnostic procedure

INSPECTION		ACTION
INSPECT BASE UNIT • Clear DTC. • Turn on radio and operate it for **3 seconds or more**. • Start on-board diagnostic test mode. • Is DTC 09 ERR22 or 09:Er22 displayed?	Yes	Replace base unit.
	No	Troubleshooting completed.

End Of Sie

DTC 09 ERR20 OR 09:ER20

AME817566900W06

DTC 09 ERR20 or 09:Er20	Power supply circuit of base unit
DETECTION CONDITION	• Voltage detected at base unit terminals 1B and 1R is **less than 8.5 V**, **or more than 16 V (must not be 16V)**.
POSSIBLE CAUSE	• Weak battery • Malfunction in wiring harness between battery and base unit

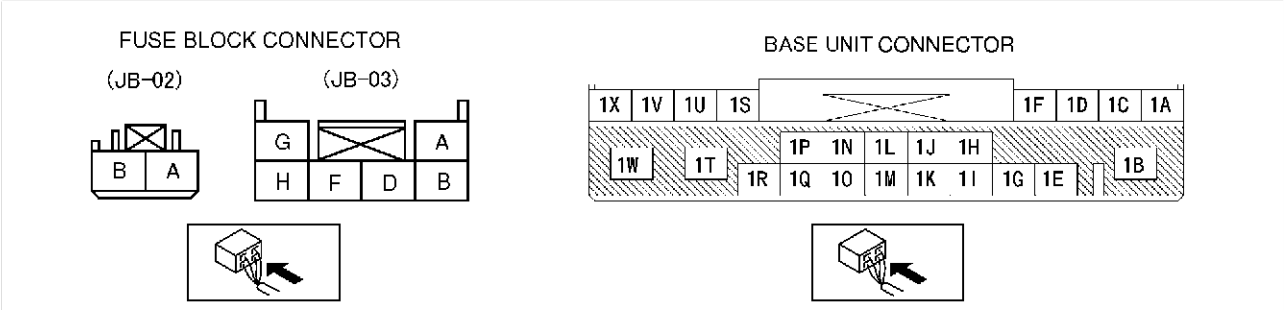

Diagnostic procedure

STEP	INSPECTION		ACTION
1	**INSPECT FUSE** • Remove CIGAR 25 A fuse and ROOM 15 A fuse. • Inspect CIGAR 25 A fuse and ROOM 15 A fuse. • Are fuses okay?	Yes	Go to next step.
		No	Replace fuse.
2	**INSPECT BATTERY** • Measure battery voltage. • Is voltage **8.5 V —16 V**?	Yes	Go to next step.
		No	Battery is weak. • Inspect charge/discharge system.
3	**INSPECT WIRING HARNESS BETWEEN BATTERY AND FUSE BLOCK** • Turn ignition switch to ACC position. • Measure voltage at fuse block connector(JB-02) terminal A and fuse block connector(JB-03) terminal G • voltage **8.5 V —16 V**?	Yes	Go to next step.
		No	Repair wiring harness between battery and fuse block.
4	**INSPECT WIRING HARNESS BETWEEN FUSE BLOCK AND BASE UNIT** • Install CIGAR 25 A fuse and ROOM 15 A fuse. • Measure voltage at base unit connector terminals 1B and 1R. • Is voltage **8.5 V —16 V**?	Yes	Go to next step.
		No	Repair wiring harness between fuse block and base unit.

T

STEP	INSPECTION		ACTION
5	**INSPECT BASE UNIT** • Clear DTC. • Turn ignition switch to ACC or ON position and hold for **30 seconds or more**. • Start on-board diagnostic test mode. • Is DTC 09 ERR20 or 09:Er20 displayed?	Yes	Replace base unit.
		No	Troubleshooting completed.

End Of Sie

DTC 00 ERR10 OR 00:ER10

AME817566900W07

DTC 00 ERR10 or 00:Er10	Cassette deck—base unit communication line
DETECTION CONDITION	• Base unit detects communication error with cassette deck.
POSSIBLE CAUSE	• Malfunction of connectors between base unit and cassette deck • Cassette deck malfunction • Base unit malfunction

Diagnostic procedure

STEP	INSPECTION		ACTION
1	**INSPECT CONNECTOR** • Remove cassette deck and inspect connector for the following. — Deformation of pin — Poor connection of female terminal — Pinching of foreign material • Is connector okay?	Yes	Go to next step.
		No	Repair connector, then go to next step.
2	**VERIFY THAT CASSETTE DECK IS INSTALLED WITH BASE UNIT** • Install cassette deck and verify its installation condition. • Is cassette deck securely installed?	Yes	Go to next step.
		No	Securely install cassette deck, then go to next step.
3	**INSPECT CASSETTE DECK** • Clear DTC. • Turn ignition switch to ACC or ON position and hold for **3 seconds or more**. • Start on-board diagnostic test mode. • Is DTC 00 ERR10 or 00:Er10 displayed?	Yes	Replace base unit and cassette deck.
		No	Troubleshooting completed.

End Of Sie

DTC 03 ERR10 OR 03:ER10

AME817566900W08

DTC 03 ERR10 or 03:Er10	CD player—base unit communication line
DETECTION CONDITION	• Base unit detects communication error with CD player.
POSSIBLE CAUSE	• Malfunction of connectors between base unit and CD player • CD player malfunction • Base unit malfunction

Diagnostic procedure

STEP	INSPECTION		ACTION
1	**INSPECT CONNECTOR** • Remove CD player and inspect connector for the following. — Deformation of pin — Poor connection of female terminal — Pinching of foreign material • Is connector okay?	Yes	Go to next step.
		No	Repair connector, then go to next step.
2	**VERIFY THAT CD PLAYER IS INSTALLED WITH BASE UNIT** • Install CD player and verify its installation condition. • Is CD player securely installed?	Yes	Go to next step.
		No	Securely install CD player, then go to next step.

STEP	INSPECTION		ACTION
3	**INSPECT CD PLAYER** • Clear DTC. • Turn ignition switch to ACC or ON position and hold for **3 seconds or more**. • Start on-board diagnostic test mode. • Is DTC 03 ERR10 or 03:Er10 displayed?	Yes	Replace base unit and CD player.
		No	Troubleshooting completed.

End Of Ste

DTC 05 ERR10 OR 05:ER10

AME817566900W09

DTC 05 ERR10 or 05:Er10	CD changer (external type)—base unit communication line
DETECTION CONDITION	• Base unit detects communication error with CD changer (external type)
POSSIBLE CAUSE	• Malfunction of connectors between base unit and CD changer (external type) • CD changer (external type) malfunction • Base unit malfunction

Diagnostic procedure

STEP	INSPECTION		ACTION
1	**INSPECT CONNECTOR** • Inspect base unit and CD changer (external type) connectors for connection. • Are connectors securely connected?	Yes	Go to next step.
		No	Reconnect connector, then go to next step.
2	**INSPECT WIRING HARNESS BETWEEN CD CHANGER (EXTERNAL TYPE) AND BASE UNIT** • Inspect wiring harness between base unit and CD changer (external type). • Is wiring harness okay?	Yes	Go to next step.
		No	Securely install CD changer (external type), then go to next step.
3	**INSPECT CD CHANGER (EXTERNAL TYPE)** • Clear DTC. • Turn ignition switch to ACC or ON position and hold for **3 seconds or more**. • Start on-board diagnostic test mode. • Is DTC 05 ERR10 or 05:Er10 displayed?	Yes	Replace base unit and CD changer (external type).
		No	Troubleshooting completed.

End Of Ste

DTC 06 ERR10 OR 06:ER10

AME817566900W10

DTC 06 ERR10 or 06:Er10	CD changer (upper module)—base unit communication line
DETECTION CONDITION	• Base unit detects communication error with CD changer (upper module)
POSSIBLE CAUSE	• Malfunction of connectors between base unit and CD changer (upper module) • CD changer (upper module) malfunction • Base unit malfunction

Diagnostic procedure

STEP	INSPECTION		ACTION
1	**INSPECT CONNECTOR** • Remove CD changer (upper module) and inspect connector for the following. — Deformation of pin — Poor connection of female terminal — Pinching of foreign material • Is connector okay?	Yes	Go to next step.
		No	Repair connector, then go to next step.
2	**VERIFY THAT CD CHANGER (UPPER MODULE) IS INSTALLED WITH BASE UNIT** • Install CD changer (upper module) and verify its installation condition. • Is CD changer (upper module) securely installed?	Yes	Go to next step.
		No	Securely install CD changer (upper module), then go to next step.

T

STEP	INSPECTION		ACTION
3	**INSPECT CD CHANGER (UPPER MODULE)** • Clear DTC. • Turn ignition switch to ACC or ON position and hold for **3 seconds or more**. • Start on-board diagnostic test mode. • Is DTC 06 ERR10 or 06:Er10 displayed?	Yes	Replace base unit and CD changer (upper module).
		No	Troubleshooting completed.

End Of Sie

DTC 07 ERR10 OR 07:ER10

AME817566900W11

DTC 07 ERR10 or 07:Er10	MD player—base unit communication line
DETECTION CONDITION	• Base unit detects communication error with MD player
POSSIBLE CAUSE	• Malfunction of connectors between base unit and MD player • MD player malfunction • Base unit malfunction

Diagnostic procedure

STEP	INSPECTION		ACTION
1	**INSPECT CONNECTOR** • Remove MD player and inspect connector for the following. — Deformation of pin — Poor connection of female terminal — Pinching of foreign material • Is connector okay?	Yes	Go to next step.
		No	Repair connector, then go to next step.
2	**VERIFY THAT MD PLAYER IS INSTALLED WITH BASE UNIT** • Install MD player and verify its installation condition. • Is MD player securely installed?	Yes	Go to next step.
		No	Securely install MD player, then go to next step.
3	**INSPECT MD PLAYER** • Clear DTC. • Turn ignition switch to ACC or ON position and hold for **3 seconds or more**. • Start on-board diagnostic test mode. • Is DTC 07 ERR10 or 07:Er10 displayed?	Yes	Replace base unit and MD player.
		No	Troubleshooting completed.

End Of Sie

DTC 03 ERR01 OR 03:ER01

AME817566900W12

DTC 03 ERR01 or 03:Er01	CD player
DETECTION CONDITION	• CD player cannot implement insert and eject commands.
POSSIBLE CAUSE	• Defective CD (broken or foreign material stuck/attached) • CD player malfunction

Diagnostic procedure

STEP	INSPECTION		ACTION
1	• Is CD able to be ejected?	Yes	Go to next step.
		No	Replace CD player.
2	**INSPECT CD** • Inspect condition of CD where error has occurred. • Is CD okay?	Yes	Go to next step.
		No	Repair (remove foreign material) or replace CD, then go to next step.
3	**INSPECT CD PLAYER** • Clear DTC. • Insert and eject CD with no defect. • Start on-board diagnostic test mode. • Is DTC 03 ERR01 or 03:Er01 displayed?	Yes	Replace CD player.
		No	Troubleshooting completed.

End Of Sie

DTC 03 ERR02 OR 03:ER02

AME817566900W13

DTC 03 ERR02 or 03:Er02	CD player
DETECTION CONDITION	**Note** • When error occurs, error message “CHECK CD” is displayed in the LCD. • Cannot play CD normally or change tracks.
POSSIBLE CAUSE	• Defective CD (scratches or dirt) • CD player malfunction

Diagnostic procedure

STEP	INSPECTION		ACTION	
1	**VERIFY WHETHER MALFUNCTION IS IN CD PLAYER OR CD** • Play CD and select other song (change tracks). • Does CD player change tracks?	Yes	Go to Step 3.	
		No	Not able to change particular tracks.	Go to next step.
			Not able to change any tracks.	Change CD and perform track-change again. • If CD player changes tracks, then go to Step 3. • If not, replace CD player.
2	**INSPECT CD** • Inspect condition of CD where error has occurred. • Is CD okay?	Yes	Go to next step.	
		No	Repair (remove foreign material) or replace CD, then go to next step.	
3	**INSPECT CD PLAYER** • Clear DTC. • Play CD and select other song (change tracks). • Start on-board diagnostic test mode. • Is DTC 03 ERR02 or 03:Er02 displayed?	Yes	Replace CD player.	
		No	Troubleshooting completed.	

End Of Ste

DTC 03 ERR07 OR 03:ER07

AME817566900W14

DTC 03 ERR07 or 03:Er07	CD player
DETECTION CONDITION	**Note** • When error occurs, error message “CHECK CD” is displayed in the LCD. • Base unit detects CD reading error.
POSSIBLE CAUSE	• Defective CD (scratches or dirt) • CD player malfunction

Diagnostic procedure

STEP	INSPECTION		ACTION
1	**INSPECT CD** • Inspect condition of CD where error has occurred. • Is CD okay?	Yes	Go to next step.
		No	Repair (remove foreign material) or replace CD, then go to next step.
2	**INSPECT CD PLAYER** • Clear DTC. • Insert and play CD with no defect. • Start on-board diagnostic test mode. • Is DTC 03 ERR07 or 03:Er07 displayed?	Yes	Replace CD player.
		No	Troubleshooting completed.

End Of Ste

DTC 00 ERR01 OR 00:ER01

AME817566900W15

DTC 00 ERR01 or 00:Er01	Cassette deck
DETECTION CONDITION	• Cassette deck cannot implement insert and eject commands.
POSSIBLE CAUSE	• Defective cassette tape (deformation, broken, or foreign material stuck/attached) • Cassette deck malfunction

T

Diagnostic procedure

STEP	INSPECTION		ACTION
1	• Is cassette tape able to be ejected?	Yes	Go to next step.
		No	Replace cassette deck.
2	**INSPECT CASSETTE TAPE** • Inspect condition of cassette tape where error has occurred. • Is cassette tape okay?	Yes	Go to next step.
		No	Repair (remove foreign material) or replace cassette tape, then go to next step.
3	**INSPECT CASSETTE DECK** • Clear DTC. • Insert and eject cassette tape with no defect. • Start on-board diagnostic test mode. • Is DTC 00 ERR01 or 00:Er01 displayed?	Yes	Replace cassette deck.
		No	Troubleshooting completed.

End Of Sie

DTC 00 ERR03 OR 00:ER03

AME817566900W16

DTC 00 ERR03 or 00:Er03	Cassette deck
DETECTION CONDITION	• Base unit detects that reel built into cassette deck does not operate.
POSSIBLE CAUSE	• Defective cassette tape (tape slack, pinched tape in internal cassette deck) • Cassette deck malfunction

Diagnostic procedure

STEP	INSPECTION		ACTION
1	**INSPECT CASSETTE TAPE** • Inspect condition of cassette tape where error has occurred. • Is cassette tape okay?	Yes	Go to next step.
		No	Repair (remove tape slack or repair pinched tape) or replace cassette tape, then go to next step.
2	**INSPECT CASSETTE DECK** • Clear DTC. • Insert cassette tape with no defect. • Play cassette tape for **20 seconds or more**. • Start on-board diagnostic test mode. • Is DTC 00 ERR03 or 00:Er03 displayed?	Yes	Replace cassette deck.
		No	Troubleshooting completed.

End Of Sie

DTC 00 ERR04 OR 00:ER04

AME817566900W17

DTC 00 ERR04 or 00:Er04	Cassette tape
DETECTION CONDITION	**Note** • When error occurs, error message “CHECK TAPE” is displayed in the LCD. • Cassette tape is worn out.
POSSIBLE CAUSE	• Tape wear • Cassette deck malfunction

Diagnostic procedure

STEP	INSPECTION		ACTION
1	**INSPECT CASSETTE TAPE** • Inspect condition of cassette tape where error has occurred. • Is cassette tape okay?	Yes	Go to next step.
		No	Replace cassette tape, then go to next step.
2	**INSPECT CASSETTE DECK** • Clear DTC. • Insert cassette tape with no defect. • Play cassette tape for **20 seconds or more**. • Start on-board diagnostic test mode. • Is DTC 00 ERR04 or 00:Er04 displayed?	Yes	Replace cassette deck.
		No	Troubleshooting completed.

End Of Sie

DTC 05 ERR01 OR 05:ER01

AME817566900W18

DTC 05 ERR01 or 05:Er01	CD changer (external type)
DETECTION CONDITION	• Changer function does not operate.
POSSIBLE CAUSE	• Defective CD (broken or foreign material) • Magazine malfunction • CD changer (external type) malfunction

Diagnostic procedure

STEP	INSPECTION		ACTION	
1	**VERIFY WHETHER MALFUNCTION IS IN CD CHANGER OR OTHER PARTS** • Operate changer function. • Is function okay?	Yes	Go to Step 4.	
		No	Not able to change particular CD.	Go to next step.
			Not able to change any CD.	Go to Step 3.
2	**INSPECT CD** • Inspect condition of CD where error has occurred. • Is CD okay?	Yes	Go to next step.	
		No	Repair (remove foreign material) or replace CD, then go to next step.	
3	**INSPECT MAGAZINE** • Inspect magazine. • Is magazine okay?	Yes	Go to next step.	
		No	Repair or replace magazine, then go to next step.	
4	**INSPECT CD CHANGER (EXTERNAL TYPE)** • Clear DTC. • Operate changer. • Start on-board diagnostic test mode. • Is DTC 05 ERR01 or 05:Er01 displayed?	Yes	Replace CD changer (external type).	
		No	Troubleshooting completed.	

End Of Ste

DTC 05 ERR07 OR 05:ER07

AME817566900W19

DTC 05 ERR07 or 05:Er07	CD changer (external type)
DETECTION CONDITION	**Note** • When error occurs, error message “CHECK CD” is displayed in the LCD. • Base unit detects CD reading error.
POSSIBLE CAUSE	• Defective CD (scratches or dirt) • CD changer (external type) malfunction

Diagnostic procedure

STEP	INSPECTION		ACTION	
1	**VERIFY WHETHER MALFUNCTION IS IN CD CHANGER OR OTHER PARTS** • Play all CD in magazine. • Is CD changer able to read them properly?	Yes	Go to Step 3.	
		No	Not able to change particular CD.	Go to next step.
			Not able to change any CD.	Go to Step 3.
2	**INSPECT CD** • Inspect condition of CD where error has occurred. • Is CD okay?	Yes	Go to next step.	
		No	Repair (remove foreign material) or replace CD, then go to next step.	
3	**INSPECT CD CHANGER (EXTERNAL TYPE)** • Clear DTC. • Insert and play CD with no defect. • Start on-board diagnostic test mode. • Is DTC 05 ERR07 or 05:Er07 displayed?	Yes	Replace CD changer (external type).	
		No	Troubleshooting completed.	

End Of Ste

T

DTC 06 ERR01 OR 06:ER01

AME817566900W20

DTC 06 ERR01 or 06:Er01	CD changer (upper module)
DETECTION CONDITION	• CD changer (upper module) cannot implement insert, eject, and disc change commands.
POSSIBLE CAUSE	• Defective CD (broken or foreign material stuck/attached) • CD changer (upper module) malfunction

Diagnostic procedure

STEP	INSPECTION		ACTION
1	• Is CD able to be ejected?	Yes	Go to next step.
		No	Replace CD changer (upper module).
2	**INSPECT CD** • Inspect condition of CD where error has occurred. • Is CD okay?	Yes	Go to next step.
		No	Repair (remove foreign material) or replace CD, then go to next step.
3	**INSPECT CD CHANGER (UPPER MODULE)** • Clear DTC. • Insert and eject CD with no defect. • Start on-board diagnostic test mode. • Is DTC 06 ERR01 or 06:Er01 displayed?	Yes	Replace CD changer (upper module).
		No	Troubleshooting completed.

End Of Sie

DTC 06 ERR02 OR 06:ER02

AME817566900W21

DTC 06 ERR02 or 06:Er02	CD changer (upper module)
DETECTION CONDITION	**Note** • When error occurs, error message “CHECK CD” is displayed in the LCD. • Cannot play CD normally or change tracks.
POSSIBLE CAUSE	• Defective CD (scratches or dirt) • CD changer (upper module) malfunction

Diagnostic procedure

STEP	INSPECTION		ACTION	
1	**VERIFY WHETHER MALFUNCTION IS IN CD CHANGER (UPPER MODULE) OR CD** • Play all CDs in changer and select other song (change tracks). • Is CD changer able to change tracks?	Yes	Go to Step 3.	
		No	Not able to change particular tracks.	Go to next step.
			Not able to change any tracks.	Change CD and perform track-change again. • If CD changer changes tracks, go to Step 3. • If not, replace CD changer (upper module).
2	**INSPECT CD** • Inspect condition of CD where error has occurred. • Is CD okay?	Yes	Go to next step.	
		No	Repair (remove foreign material) or replace CD, then go to next step.	
3	**INSPECT CD CHANGER (UPPER MODULE)** • Clear DTC. • Play CD and select other song (change tracks). • Start on-board diagnostic test mode. • Is DTC 06 ERR02 or 06:Er02 displayed?	Yes	Replace CD changer (upper module).	
		No	Troubleshooting completed.	

End Of Sie

DTC 06 ERR07 OR 06:ER07

AME817566900W22

DTC 06 ERR07 or 06:Er07	CD changer (upper module)
DETECTION CONDITION	**Note** • When error occurs, error message “CHECK CD” is displayed in the LCD. • Base unit detects CD reading error.
POSSIBLE CAUSE	• Defective CD (scratches or dirt) • CD changer (upper module) malfunction

Diagnostic procedure

STEP	INSPECTION		ACTION	
1	**VERIFY WHETHER MALFUNCTION IS IN CD CHANGER (UPPER MODULE) OR CD** • Play all CDs in changer. • Is CD changer able to read them properly?	Yes	Go to Step 3.	
		No	Not able to read particular CD.	Go to next step.
			Not able to read any CD.	Go to Step 3.
2	**INSPECT CD** • Inspect condition of CD where error has occurred. • Is CD okay?	Yes	Go to next step.	
		No	Repair (remove foreign material) or replace CD, then go to next step.	
3	**INSPECT CD CHANGER (UPPER MODULE)** • Clear DTC. • Insert and play CD for **12 seconds or more**. • Start on-board diagnostic test mode. • Is DTC 06 ERR07 or 06:Er07 displayed?	Yes	Replace CD changer (upper module).	
		No	Troubleshooting completed.	

End Of Ste

DTC 07 ERR01 OR 07:ER01

AME817566900W23

DTC 07 ERR01 or 07:Er01	MD player
DETECTION CONDITION	• MD player cannot implement insert and eject commands.
POSSIBLE CAUSE	• Defective MD (broken or foreign material stuck/attached) • MD player malfunction

Diagnostic procedure

STEP	INSPECTION		ACTION
1	• Is MD able to be ejected?	Yes	Go to next step.
		No	Replace MD player.
2	**INSPECT MD** • Inspect condition of MD where error has occurred. • Is MD okay?	Yes	Go to next step.
		No	Repair (remove foreign material) or replace MD, then go to next step.
3	**INSPECT MD PLAYER** • Clear DTC. • Insert and eject MD with no defect. • Start on-board diagnostic test mode. • Is DTC 07 ERR01 or 07:Er01 displayed?	Yes	Replace MD player.
		No	Troubleshooting completed.

End Of Ste

T

DTC 07 ERR02 OR 07:ER02

AME817566900W24

DTC 07 ERR02 or 07:Er02	MD player
DETECTION CONDITION	**Note** • When error occurs, error message “CHECK MD” is displayed in the LCD. • Cannot play MD normally or change tracks.
POSSIBLE CAUSE	• Defective MD (scratches or dirt) • MD player malfunction

Diagnostic procedure

STEP	INSPECTION		ACTION	
1	**VERIFY WHETHER MALFUNCTION IS IN MD PLAYER OR MD** • Play MD and select other song (change tracks). • Is MD player able to change tracks?	Yes	Go to Step 3.	
		No	Not able to change particular tracks.	Go to next step.
			Not able to change any tracks.	Change MD and perform track-change again. • If MD player changes tracks, then go to Step 3. • If not, replace MD player.
2	**INSPECT MD** • Inspect condition of MD where error has occurred. • Is MD okay?	Yes	Go to next step.	
		No	Repair (remove foreign material) or replace MD, then go to next step.	
3	**INSPECT MD PLAYER** • Clear DTC. • Play MD and select other song (change tracks). • Start on-board diagnostic test mode. • Is DTC 07 ERR02 or 07:Er02 displayed?	Yes	Replace MD player.	
		No	Troubleshooting completed.	

End Of Sie

DTC 07 ERR07 OR 07:ER07

AME817566900W25

DTC 07 ERR07 or 07:Er07	MD player
DETECTION CONDITION	**Note** • When error occurs, error message “CHECK MD” is displayed in the LCD. • Base unit detects MD reading error.
POSSIBLE CAUSE	• Defective MD (scratches or dirt) • MD player malfunction

Diagnostic procedure

STEP	INSPECTION		ACTION
1	**INSPECT MD** • Inspect condition of MD where error has occurred. • Is MD okay?	Yes	Go to next step.
		No	Repair (remove foreign material) or replace MD, then go to next step.
2	**INSPECT MD PLAYER** • Clear DTC. • Insert and play MD for **12 seconds or more**. • Start on-board diagnostic test mode. • Is DTC 07 ERR07 or 07:Er07 displayed?	Yes	Replace MD player.
		No	Troubleshooting completed.

End Of Sie

DIAGNOSTIC ASSIST FUNCTION

AME817566900W26

Structural View
Switch location

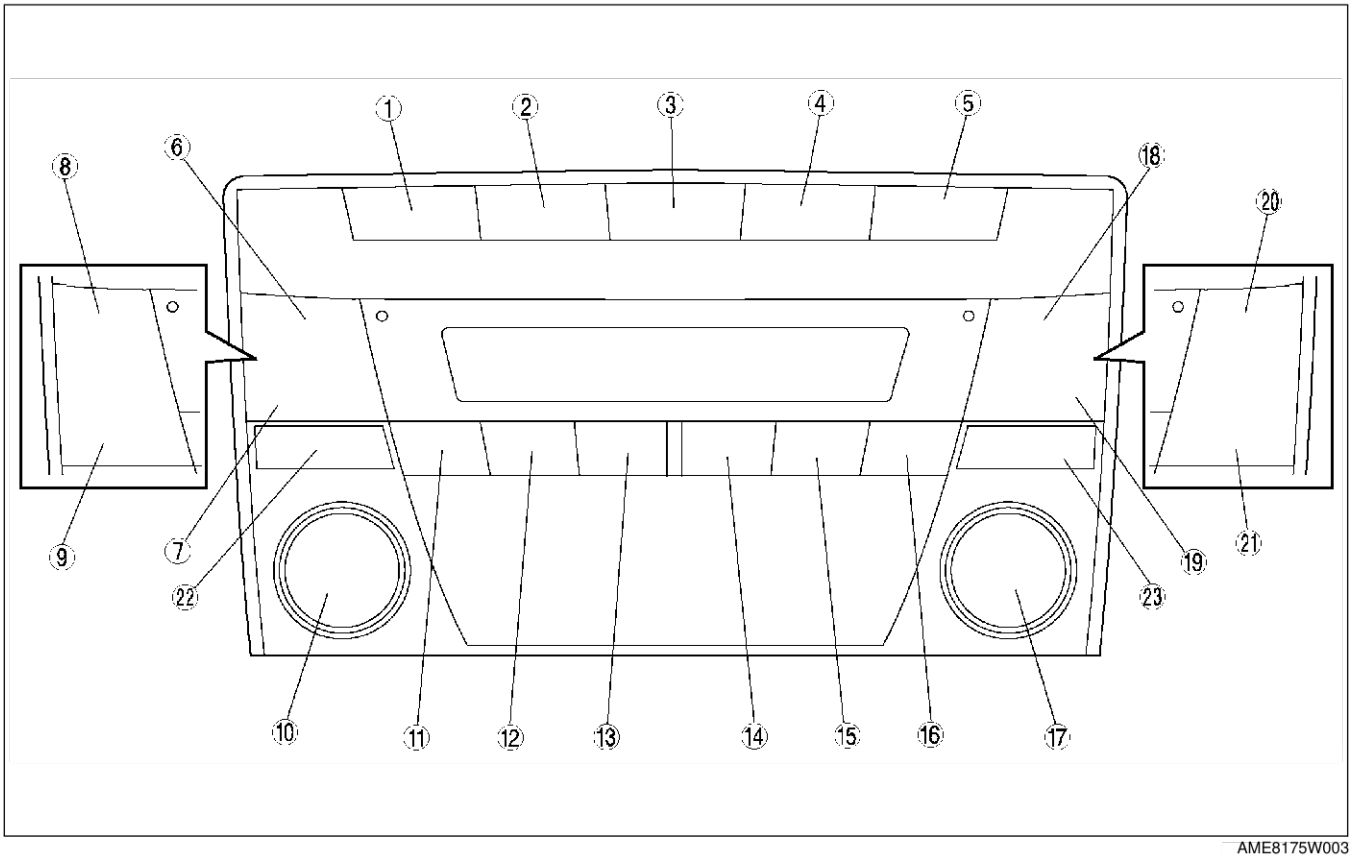

AME8175W003

1	FM1/2 button
2	AM button
3	CD button
4	MD/TAPE button
5	CLOCK button
6	SEEK button (upper) (with RDS)
7	SEEK button (lower) (with RDS)
8	SCAN button (without RDS)
9	AUTO-M button (without RDS)
10	POWER button (with RDS)
	AUDIO CONT button (without RDS)
11	Preset button “1”
12	Preset button “2”

13	Preset button “3”
14	Preset button “4”
15	Preset button “5”
16	Preset button “6”
17	AUDIO CONT button (with RDS)
	POWER button (without RDS)
18	TA button (with RDS)
19	PTY button (with RDS)
20	SEEK button (upper) (without RDS)
21	SEEK button (lower) (without RDS)
22	AUTO-M button (with RDS)
23	AF button (without RDS)

T

LCD inspection

1. With audio on, first press the POWER button, then simultaneously press the SEEK button (upper) for **approximately 1 second**.
2. Inspect the LCD according to the following table:

Inspection	Display	Action	
Start LCD inspection mode.	WITH RDS WITHOUT RDS 	Characters displayed in LCD are not truncated or faint.	LCD is okay.
		Other than above.	Replace base unit.

3. Turn the audio off or the ignition switch to the LOCK position to stop the diagnostic assist function.

Button inspection

1. With audio on, first press the POWER button, then simultaneously press the CLOCK button for **approximately 1 second**.
2. Inspect the button according to the following table:

Inspection	Display	Action	
• Start button inspection mode. • Press the all buttons.	—	Buzzer sounds.	Button is okay.
		Buzzer does not sound.	Replace base unit.

3. Turn the audio off or the ignition switch to the LOCK position to stop the diagnostic assist function.

Speaker inspection

1. With audio on, first press the POWER button, then simultaneously press the PTY button (with RDS) or AUTO-M button (without RDS) for **approximately 1 second**.
2. Inspect the speaker according to the following table:

Inspection	Display	Action	
• Start speaker inspection mode. • Does each speaker output sound in the following order? 1. Left front door speaker and front tweeter 2. Right front door speaker and front tweeter 3. Right rear speaker and rear tweeter 4. Left rear speaker and rear tweeter	—	Yes	Speakers and wiring harness between base unit and speakers are okay.
		No	Inspect the following parts. • Malfunctioning speaker • Wiring harness between base unit and malfunctioning speaker

3. Turn the audio off or the ignition switch to the LOCK position to stop the diagnostic assist function.

Radio reception condition inspection

1. With audio on and at radio mode, first press the POWER button, then simultaneously press the preset button "2" for **approximately 1 second**.
2. Inspect the radio reception condition according to the following table:

Inspection	Display	Action
Start radio reception condition inspection mode.	NORMAL 5 GRADUATIONS OR ABOVE	Antenna, antenna feeder, and base unit are okay.
	3–4 GRADUATIONS	Change frequency (channel) and inspect again.
	MALFUNCTIONING 2 GRADUATIONS OR BELOW	Inspect antenna and antenna feeder. • If either one of them is not okay, replace malfunctioning part. • If both are okay, replace base unit.

3. Turn the audio off or the ignition switch to the LOCK position to stop the diagnostic assist function.

End Of Sie

ON-BOARD DIAGNOSTIC [CAR-NAVIGATION SYSTEM]

SPEAKER CONNECTION INSPECTION

AME817666902W01

Car-navigation System

1. Turn the ignition switch to ACC position and then turn off the navigation unit.
2. First press the OUT button, then simultaneously press and the POWER/VOL. button.
3. Inspect the speaker connection according to the following table:

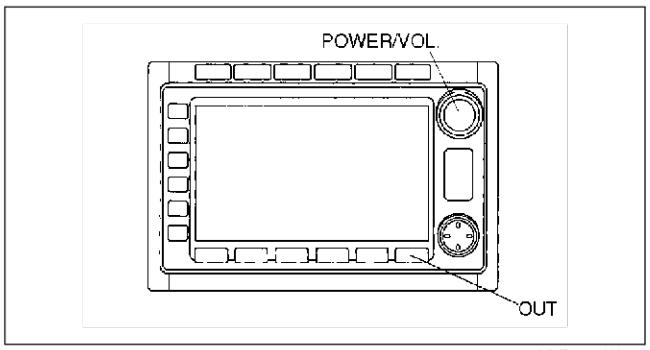

YLE8124W027

Inspection		Action
Does each speaker output sound for approx.**1 second** in the following order? 1. Left front door speaker and front tweeter 2. Right front door speaker and front tweeter 3. Right rear speaker and rear tweeter 4. Light rear speaker and rear tweeter	Yes	Wiring harness between speaker and car-navigation unit is okay.
	No	Inspect the following parts: • Malfunctioning speaker • Wiring harness between malfunctioning speaker and car-navigation unit

End Of Sie

T

ON-BOARD DIAGNOSTIC [CRUISE CONTROL SYSTEM]

CRUISE CONTROL SYSTEM WIRING DIAGRAM

AME817266350W01

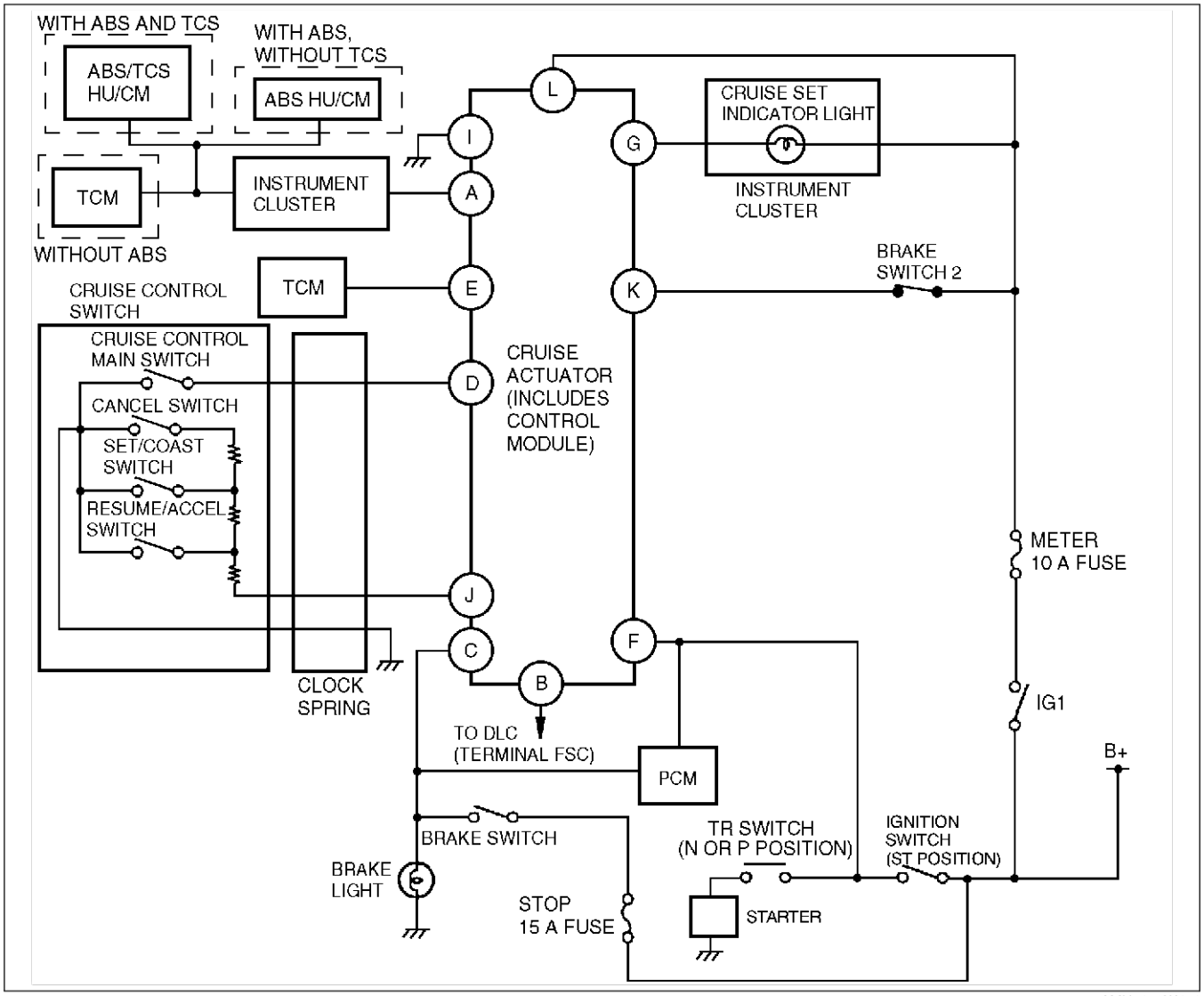

AMU0102W401

End Of Sie

FOREWORD

AME817266350W02

Outline

- There are two on-board diagnostic functions: Operation mode, which inspects for and indicates correct operation of the input signals to the control module, and Condition detection mode, which indicates troubles in the system.
- The two functions can be done using either of the following methods:
  — Verifying the flashing pattern of the cruise set indicator light in the instrument cluster.
  — Verifying the output of the DLC using the **SST** (WDS or equivalent).

Inspection Order

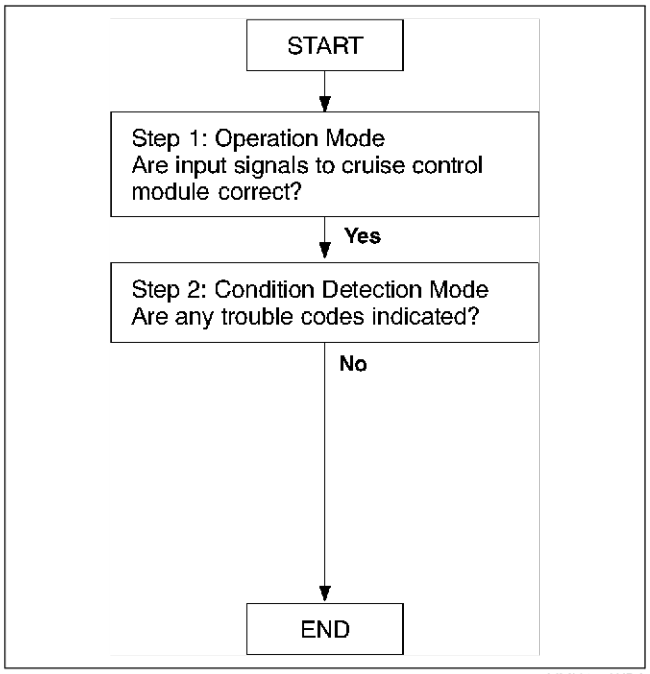

YMU102WPA

End Of Ste

INSPECTION OF DTCS FOR OPERATION MODE

AME817266350W03

Note

- The cruise set indicator light will illuminate **for 3 seconds**, when operation mode is on.
- If the cruise set indicator light does not illuminate **for 3 seconds** (Operation mode is not on), the following may be the cause of the malfunction:
  — Cruise actuator ignition power supply fuse
  — Cruise set indicator light power supply fuse
  — Cruise control switch
  — Cruise control main switch
  — Clock spring for air bag system
  — Print plate in instrument cluster
  — Cruise set indicator light bulb
  — Cruise actuator
  — Open or short circuit in following wiring harnesses:
    - Between cruise set indicator light and cruise actuator terminal G
    - Between fuse block and cruise actuator terminal L
    - Between fuse block and instrument cluster
    - Between cruise actuator terminal B and DLC (using the WDS or equivalent only)
    - Between cruise actuator and clock spring
    - Between clock spring and cruise control switch
  — Open circuit in following wiring harnesses:
    - Between cruise actuator terminal I and ground
    - Between clock spring and ground

T

Using the Cruise Set Indicator Light

1. Turn the ignition switch to the ON position.
2. Verify that the cruise control main switch is off.
3. Turn and hold the RESUME/ACCEL switch on (1), and turn on the cruise control main switch (2). Keep the RESUME/ACCEL switch on for **3 seconds or more**. (The cruise set indicator light will illuminate for **3 seconds**, showing that the system inspection has started.)
4. Operate each switch as described in the operation code list and note the operation code list pattern.
   - If the cruise set indicator light does not flash, inspect the corresponding system area.
   - If it flashes, the corresponding DTC(s) will be indicated and mode can be judged normal.
5. The operation mode is canceled by turning the ignition switch to LOCK position or turning off the cruise control main switch.

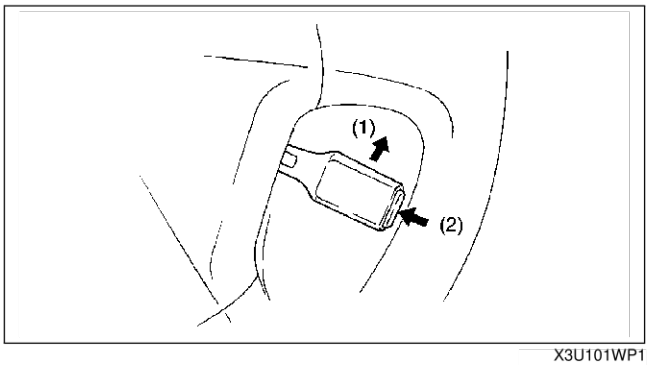

X3U101WP1

Using the SST (WDS or equivalent)
DTCs retrieving procedure

1. Hook-up the **SST** to the vehicle. Make sure that ignition switch is at LOCK position and all accessories are OFF.
2. Turn the ignition switch to ON position (engine OFF).
3. Retrieve any DTCs using WDS or equivalent.

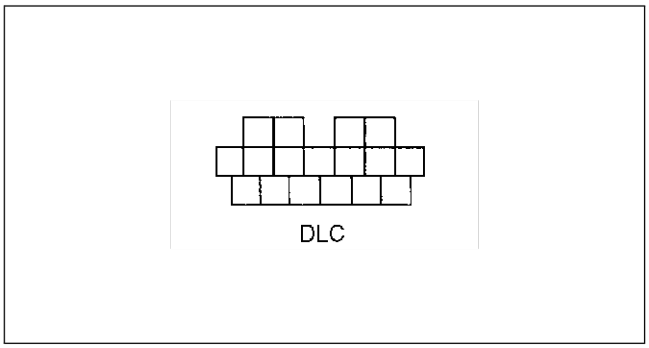

Z3U0102W401

Operation Code List

Operation	DTC	Output pattern	Diagnosed circuit	Page
Turn SET/COAST switch on	21	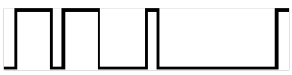	Cruise control switch (SET/COAST switch)	(See T–109 DTC 21)
Turn RESUME/ACCEL switch on	22		Cruise control switch (RESUME/ACCEL switch)	(See T–109 DTC 22)
Depress brake pedal	31	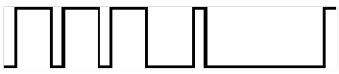	Brake switch	(See T–110 DTC 31)
Shift selector lever to P or N position	35		TR switch	(See T–111 DTC 35)
Drive vehicle above 40 km/h {25 mph}	37	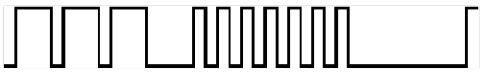	Vehicle speed sensor	(See T–112 DTC 37)

Inspection of Diagnostic Trouble Codes
Foreword

- When performing an asterisked (*) troubleshooting inspection, shake the wiring harness and connectors while doing the inspection to discover whether poor contact points are the cause of any intermittent malfunctions. If there is a problem, check to make sure connectors, terminals and wiring harness are connected correctly and undamaged.

End Of Sie

DTC 21

AME817266350W04

DTC 21	Cruise control switch (SET/COAST switch)
DETECTION CONDITION	• Resistance detected between cruise actuator connector terminal J and ground is other than **approximately 198 ohms**.
POSSIBLE CAUSE	• Cruise actuator malfunction • Cruise control switch malfunction • Clock spring malfunction • Open circuit in wiring harness between clock spring and ground • Open or short circuit in wiring harness between cruise actuator and clock spring

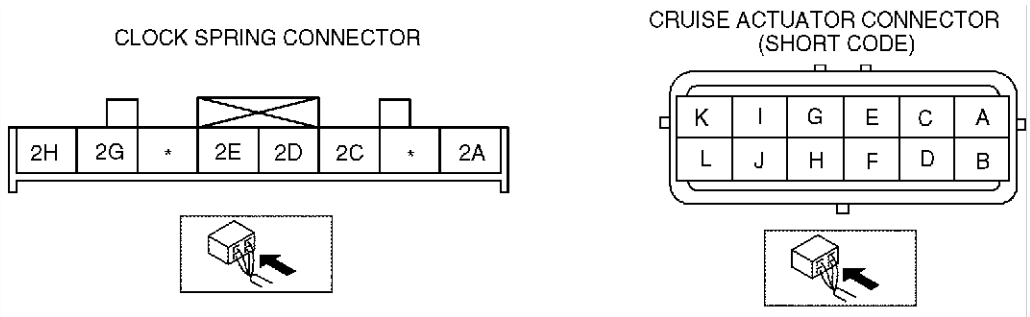

Diagnostic procedure

STEP	INSPECTION		ACTION
1	**INSPECT SIGNAL LINE OF CRUISE CONTROL SWITCH POSITION** • Disconnect cruise actuator connector. • Turn SET/COAST switch on. • Is resistance at cruise actuator connector terminal J **approximately 198 ohms**?	Yes	Replace cruise actuator. (See T–78 CRUISE ACTUATOR REMOVAL/ INSTALLATION)
		No	Go to next step.
2	**INSPECT CRUISE CONTROL SWITCH** • Inspect cruise control switch. (See T–84 CRUISE CONTROL SWITCH INSPECTION) • Is cruise control switch okay?	Yes	Go to next step.
		No	Replace cruise control switch. (See T–83 CRUISE CONTROL SWITCH REMOVAL/ INSTALLATION)
3	**INSPECT CLOCK SPRING** • Inspect clock spring. • Is clock spring okay?	Yes	Go to next step.
		No	Replace clock spring.
4	**INSPECT WIRING HARNESS BETWEEN CLOCK SPRING AND GROUND FOR CONTINUITY** • Disconnect cruise control switch connector. • Is there continuity between clock spring connector terminal 2E and ground?	Yes	Repair wiring harness.(cruise actuator—clock spring)
		No	Repair wiring harness.(clock spring—ground)

End Of Sie

DTC 22

AME817266350W05

DTC 22	Cruise control switch (RESUME/ACCEL switch)
DETECTION CONDITION	• Resistance detected between cruise actuator connector terminal J and ground is other than **68 ohms**.
POSSIBLE CAUSE	• Cruise actuator malfunction • Cruise control switch malfunction

Diagnostic procedure

INSPECTION		ACTION
INSPECT CRUISE CONTROL SWITCH • Inspect cruise control switch. (See T–84 CRUISE CONTROL SWITCH INSPECTION) • Is cruise control switch okay?	Yes	• Replace cruise actuator. (See T–78 CRUISE ACTUATOR REMOVAL/ INSTALLATION)
	No	• Replace cruise control switch. (See T–83 CRUISE CONTROL SWITCH REMOVAL/ INSTALLATION)

End Of Sie

DTC 31

AME817266350W06

DTC 31	Brake switch
DETECTION CONDITION	• Voltage detected at cruise actuator connector terminal C is not **approximately 12 V** or voltage detected at cruise actuator connector terminal K is not **approximately 0 V**.
POSSIBLE CAUSE	• Burnt STOP 15 A fuse • Cruise actuator malfunction • Brake switch and/or brake switch 2 malfunction • Open circuit in wiring harness between STOP 15 A fuse and brake switch • Open circuit in wiring harness between brake switch and cruise actuator terminal C • Short circuit in wiring harness between brake switch 2 and cruise actuator terminal K

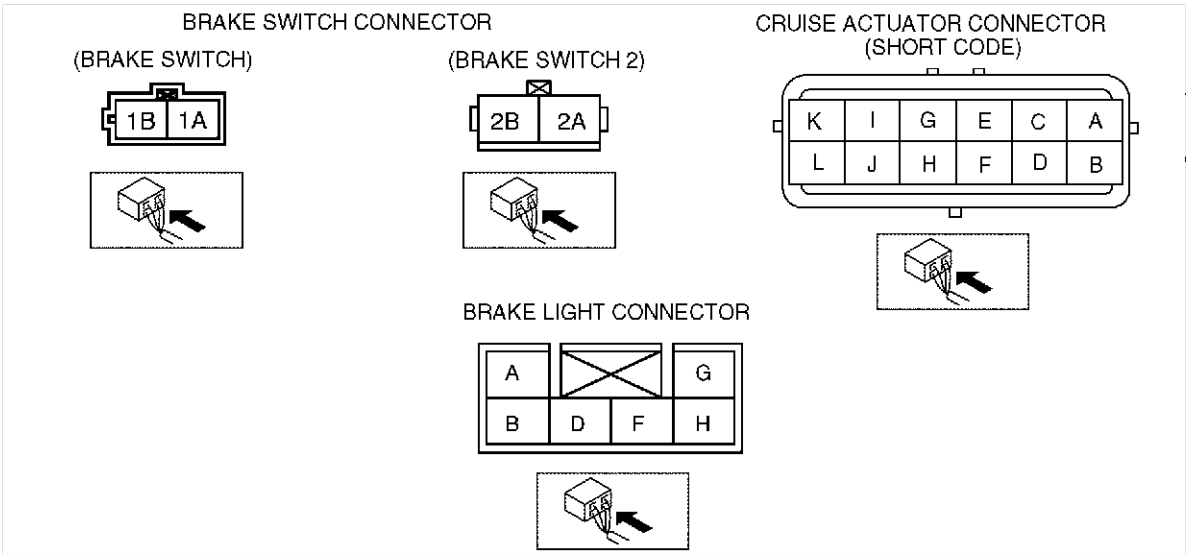

Diagnostic procedure

STEP	INSPECTION		ACTION
1	**VERIFY WHICH BRAKE SWITCH CIRCUIT IS MALFUNCTIONING** • Does brake light illuminate when brake pedal depressed?	Yes	Go to Step 6.
		No	Go to next step.
2	**INSPECT STOP 15 A FUSE FOR FUSION** • Is STOP 15 A fuse okay?	Yes	Go to next step.
		No	Replace fuse after inspecting and repairing wiring harness.
* 3	**INSPECT WIRING HARNESS BETWEEN STOP 15 A FUSE AND BRAKE SWITCH FOR CONTINUITY** • Depress brake pedal. • Is voltage at brake switch connector terminal 1B **approximately 12 V**?	Yes	Go to Step 5.
		No	Go to next step.
* 4	**INSPECT WIRING HARNESS BETWEEN STOP 15 A FUSE AND BRAKE SWITCH FOR CONTINUITY** • Is voltage at brake switch connector terminal 1A **approximately 12 V**?	Yes	Inspect brake switch.
		No	Repair wiring harness. (STOP 15 A fuse—Brake switch)
* 5	**INSPECT WIRING HARNESS BETWEEN BRAKE SWITCH AND BRAKE LIGHT FOR CONTINUITY** • Depress brake pedal. • Is voltage at brake light connector terminal (power supply side) **approximately 12 V**?	Yes	Inspect following electrical parts. • Brake light bulb • Wiring harness between brake light and ground
		No	Repair wiring harness. (Brake switch—Brake light)
* 6	**INSPECT WIRING HARNESS BETWEEN BRAKE SWITCH AND CRUISE ACTUATOR FOR CONTINUITY** • Depress brake pedal. • Is voltage at cruise actuator connector terminal C **approximately 12 V**?	Yes	Go to next step.
		No	Repair wiring harness. (Cruise actuator—Brake switch)

STEP	INSPECTION		ACTION
* 7	**VERIFY WHICH IS MALFUNCTIONING, CRUISE ACTUATOR AND WIRING HARNESS (BRAKE SWITCH 2 AND CRUISE ACTUATOR) OR BRAKE SWITCH 2** • Turn ignition switch ON position. • Depress brake pedal • Is voltage at brake switch 2 connector terminal 2B **approximately 12 V**?	Yes	Inspect brake switch.
		No	Go to next step.
* 8	**INSPECT WIRING HARNESS BETWEEN BRAKE SWITCH 2 AND CRUISE ACTUATOR FOR SHORT TO POWER SUPPLY** • Turn ignition switch to LOCK position. • Disconnect brake switch 2 connector. • Disconnect cruise actuator connector. • Turn ignition switch ON position. • Is voltage at cruise actuator connector terminal K **approximately 12 V**?	Yes	Repair wiring harness. (Cruise actuator—Brake switch 2)
		No	Replace cruise actuator. (See T–78 CRUISE ACTUATOR REMOVAL/ INSTALLATION)

End Of Sie

DTC 35

AME817266350W07

DTC 35	TR switch
DETECTION CONDITION	• Voltage detected at cruise actuator connector terminal F is not **approximately 0 V**.
POSSIBLE CAUSE	• Cruise actuator malfunction • Starter malfunction • TR switch malfunction • Open circuit in wiring harness between ignition switch and TR switch • Open circuit in wiring harness between cruise actuator and TR switch

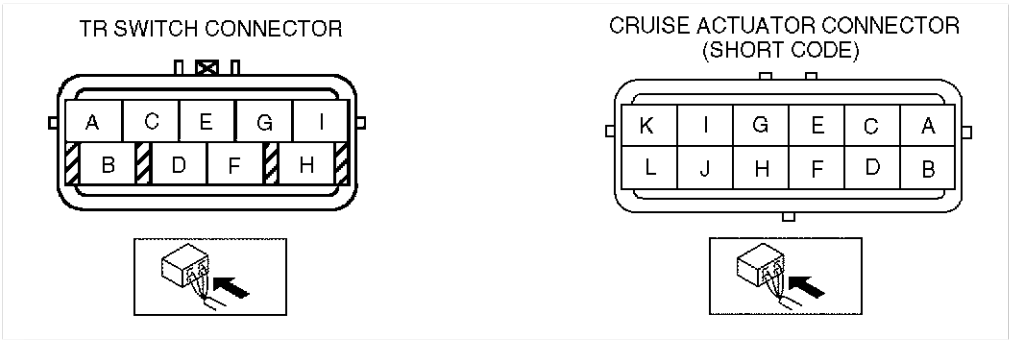

Diagnostic procedure

STEP	INSPECTION		ACTION
1	**INSPECT TR SWITCH** • Inspect TR switch. • Is TR switch okay?	Yes	Go to next step.
		No	Replace TR switch.
* 2	**INSPECT WIRING HARNESS BETWEEN TR SWITCH AND GROUND FOR CONTINUITY** • Disconnect TR switch connector. • Is there continuity between TR switch connector terminal B and ground?	Yes	Go to next step.
		No	Repair wiring harness (TR switch—starter) or inspect starter.
* 3	**INSPECT WIRING HARNESS BETWEEN CRUISE ACTUATOR AND TR SWITCH FOR CONTINUITY** • Disconnect cruise actuator connector. • Is there continuity between cruise actuator connector terminal F and TR switch connector terminal H?	Yes	Replace cruise actuator. (See T–78 CRUISE ACTUATOR REMOVAL/ INSTALLATION)
		No	Repair wiring harness. (Cruise actuator—TR switch)

End Of Sie

T

DTC 37

AME817266350W08

DTC 37	Vehicle speed sensor
DETECTION CONDITION	• Vehicle speed signal is not detected at cruise actuator connector terminal A.
POSSIBLE CAUSE	• Cruise actuator malfunction • Instrument cluster malfunction • Open or short circuit in wiring harness between instrument cluster and cruise actuator

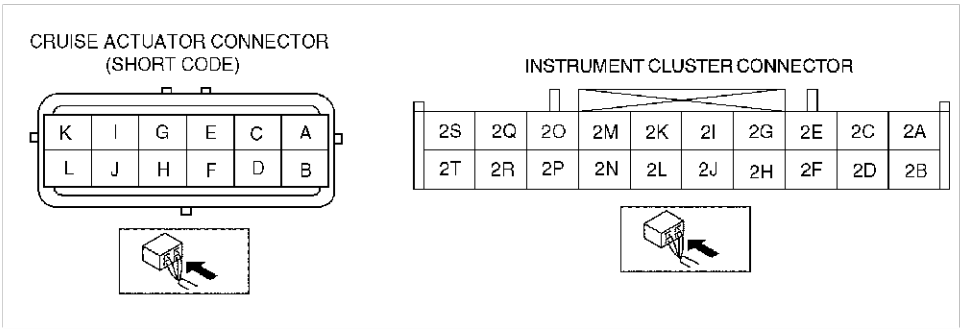

Diagnostic procedure

STEP	INSPECTION		ACTION
1	**INSPECT SPEEDOMETER OPERATION** • Does speedometer operate correctly?	Yes	Go to next step.
		No	Perform instrument cluster input/output check mode. (See T–37 INSTRUMENT CLUSTER INPUT/ OUTPUT CHECK MODE)
2	**INSPECT PCM ON-BOARD DIAGNOSTIC** • Drive the vehicle at more than **40 km/h {25 mph}**. • Check the DTC for PCM ON-BOARD DIAGNOSTIC. • Is DTC P0500 displayed?	Yes	Go to applicable DTC inspection.
		No	Go to next step.
* 3	**VERIFY WHICH IS MALFUNCTIONING, WIRING HARNESS (INSTRUMENT CLUSTER AND CRUISE ACTUATOR) OR CRUISE ACTUATOR** • Disconnect cruise actuator connector and instrument cluster connector (20-pin). • Is there continuity between cruise actuator connector terminal A and instrument cluster connector (20-pin) terminal 2O?	Yes	Replace cruise actuator. (See T–78 CRUISE ACTUATOR REMOVAL/ INSTALLATION)
		No	Repair wiring harness. (Instrument cluster—Cruise actuator)

End Of Sie

INSPECTION OF DTCS FOR CONDITION DETECTION MODE

AME817266350W09

Using the Cruise Set Indicator Light

Note

- The cruise set indicator light will illuminate **for 3 seconds**, when condition detection mode is on.
- If the RESUME/ACCEL switch on the cruise control switch is malfunctioning, the cruise set indicator light will not give a correct indication when you inspect the system. Use the **SST** (WDS or equivalent) to determine the cause of the malfunction.

1. Drive the vehicle at **40 km/h {25 mph} or more**.
2. Turn on the cruise control main switches.
3. Operate each of the cruise control switches.
4. Stop the vehicle and let it idle.
5. Turn on the cruise control main switch (1).
6. Turn and hold the RESUME/ACCEL switch on **for at least 3 seconds** (2). The cruise set indicator light will illuminate **for 3 seconds**, and then go off **for at least 2 seconds**. Thus, the condition detection mode begins.
   - If a DTC is indicated, inspect the corresponding system area.
   - If normal, DTC(s) will not be indicated.
7. The condition detection mode is canceled by turning the ignition switch to LOCK position or turning off the cruise control main switch.

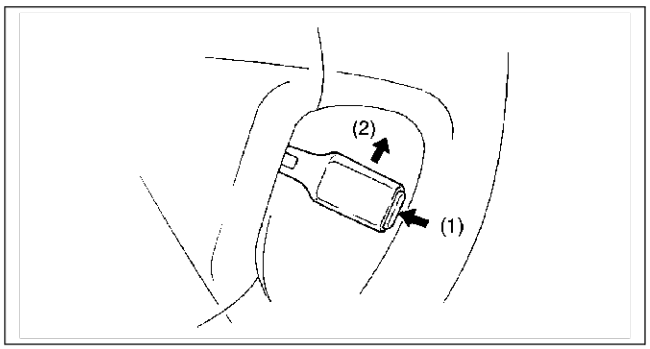

X3U101WPL

Using the SST (WDS or equivalent)

DTCs retrieving procedure

1. Hook-up the **SST** to the vehicle. Make sure that ignition switch is at LOCK position and all accessories are OFF.
2. Turn the ignition switch to ON position (engine OFF).
3. Retrieve any DTCs using WDS or equivalent.

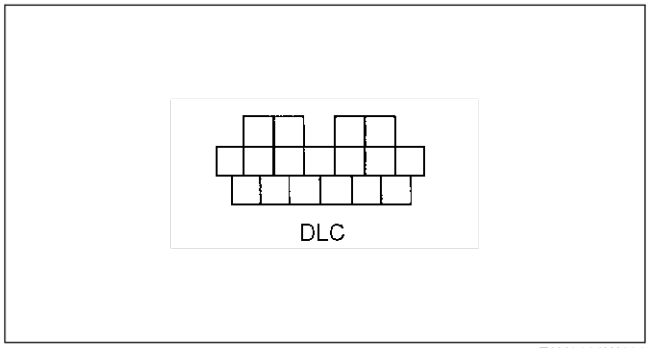

Z3U0102W401

Condition Code List

DTC	Output pattern	Diagnosed circuit	Page
01		Cruise actuator (Drive circuit)	(See T–114 DTC 01)
05	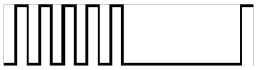	Brake switch	(See T–114 DTC 05)
07		Brake switch Brake switch 2	(See T–115 DTC 07)
11	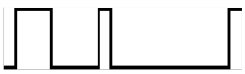	Cruise control switch (SET/ COAST switch)	(See T–115 DTC 11)
12		Cruise control switch (RESUME/ ACCEL switch)	(See T–116 DTC 12)

T

DTC	Output pattern	Diagnosed circuit	Page
13		Cruise control switch (Ground circuit)	(See T–116 DTC 13)
15	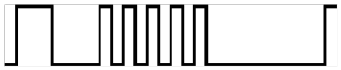	Cruise actuator (Control circuit)	(See T–116 DTC 15)

Note
- When two or more DTCs are indicated, inspect the malfunction with the smallest number first.

Inspection of Diagnostic Trouble Codes
Foreword
- When performing an asterisked (*) troubleshooting inspection, shake the wiring harness and connectors while doing the inspection to discover whether poor contact points are the cause of any intermittent malfunctions. If there is a problem, check to make sure connectors, terminals and wiring harness are connected correctly and undamaged.

End Of Sie

DTC 01

AME817266350W10

DTC 01	Cruise actuator (Drive circuit)
DETECTION CONDITION	• Malfunction in cruise actuator circuit (drive circuit)
POSSIBLE CAUSE	• Cruise actuator malfunction

Diagnostic procedure

ACTION
REPLACE CRUISE ACTUATOR IF IT IS MALFUNCTIONING • Replace cruise actuator. (See T–78 CRUISE ACTUATOR REMOVAL/INSTALLATION)

End Of Sie

DTC 05

AME817266350W11

DTC 05	Brake switch
DETECTION CONDITION	• Voltage detected at cruise actuator connector terminal C is always **approximately 0 V**.
POSSIBLE CAUSE	• Cruise actuator malfunction

Diagnostic procedure

INSPECTION		ACTION
INSPECT DTC FOR OPERATION MODE • Was operation mode for DTC 31 performed?	Yes	Perform operation mode for DTC 31 on-board diagnostic again. Even if no malfunctions are detected in operation mode, if DTC 05 is indicated in condition detection mode on-board diagnostic, replace cruise actuator. (See T–78 CRUISE ACTUATOR REMOVAL/INSTALLATION)
	No	Perform operation mode for DTC 31.

End Of Sie

DTC 07

AME817266350W12

DTC 07	Brake switch Brake switch 2
DETECTION CONDITION	• Voltage detected at cruise actuator connector terminal C or K is always **approximately 12 V**. • Voltage detected at cruise actuator connector terminal K is always **approximately 0 V**.
POSSIBLE CAUSE	• METER 10 A fuse burnt out • Brake switch and/or brake switch 2 malfunction • Cruise actuator malfunction • Open circuit in wiring harness between STOP 15 A fuse and brake switch • Open or short circuit in wiring harness between brake switch and cruise actuator terminal C • Open circuit in wiring harness between brake switch 2 and METER 10 A fuse • Open or short circuit in wiring harness between cruise actuator terminal K and brake switch 2

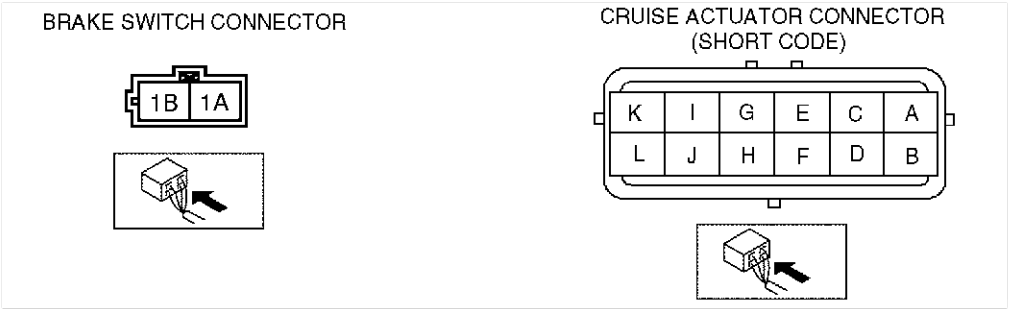

Diagnostic procedure

STEP	INSPECTION		ACTION
1	**INSPECT BRAKE SWITCH** • Disconnect brake switch connector. • Inspect brake switch. • Is brake switch okay?	Yes	Go to next step.
		No	Replace brake switch.
2	**INSPECT BRAKE SWITCH 2** • Inspect brake switch 2. • Is brake switch okay?	Yes	Go to next step.
		No	Replace brake switch.
3	**INSPECT WIRING HARNESS BETWEEN BRAKE SWITCH AND CRUISE ACTUATOR FOR CONTINUITY** • Disconnect cruise actuator connector. • Is there continuity between brake switch connector 1B and cruise actuator connector C.	Yes	Go to next step.
		No	Repair wiring harness. (Cruise actuator—Brake switch)
4	**INSPECT WIRING HARNESS BETWEEN BRAKE SWITCH 2 AND CRUISE ACTUATOR FOR SHORT TO POWER SUPPLY** • Connect brake switch connector. • Turn ignition switch ON position. • Is voltage at cruise actuator connector terminal K **approximately 12 V**?	Yes	Replace cruise actuator. (See T–78 CRUISE ACTUATOR REMOVAL/ INSTALLATION)
		No	Repair wiring harness. (Cruise actuator—Brake switch 2)

End Of Ste

DTC 11

AME817266350W13

DTC 11	Cruise control switch (SET/COAST switch)
DETECTION CONDITION	• Resistance detected between cruise actuator connector terminal J and ground is always **approximately 198 ohms**.
POSSIBLE CAUSE	• Cruise actuator malfunction • Cruise control switch malfunction

T

Diagnostic procedure

INSPECTION		ACTION
INSPECT DTC FOR OPERATION MODE • Was operation mode for DTC 21 performed?	Yes	Perform operation mode for DTC 21 on-board diagnostic again. Even if no malfunctions are detected in operation mode, if DTC 11 is indicated in condition detection mode on-board diagnostic, replace cruise actuator. (See T–78 CRUISE ACTUATOR REMOVAL/INSTALLATION)
	No	Perform operation mode for DTC 21.

End Of Sie

DTC 12

AME817266350W14

DTC 12	Cruise control switch (RESUME/ACCEL switch)
DETECTION CONDITION	• Resistance detected between cruise actuator connector terminal J and ground is always **approximately 68 ohms**.
POSSIBLE CAUSE	• Cruise actuator malfunction

Diagnostic procedure

INSPECTION		ACTION
INSPECT DTC FOR OPERATION MODE • Was operation mode for DTC 22 performed?	Yes	Perform operation mode for DTC 22 on-board diagnostic again. Even if no malfunctions are detected in operation mode, if DTC 12 is indicated in condition detection mode on-board diagnostic, replace cruise actuator. (See T–78 CRUISE ACTUATOR REMOVAL/INSTALLATION)
	No	Perform operation mode for DTC 22.

End Of Sie

DTC 13

AME817266350W15

DTC 13	Cruise control switch (ground circuit)
DETECTION CONDITION	• Resistance detected between cruise actuator connector terminal J and ground is always **approximately 0 ohm**.
POSSIBLE CAUSE	• Cruise actuator malfunction

Diagnostic procedure

INSPECTION		ACTION
INSPECT DTC FOR OPERATION MODE • Was operation mode for DTCs 21 and 22 performed?	Yes	Perform operation mode for DTCs 21 and 22 on-board diagnostic again. Even if no malfunctions are detected in operation mode, if DTC 13 is indicated in condition detection mode on-board diagnostic, replace cruise actuator. (See T–78 CRUISE ACTUATOR REMOVAL/INSTALLATION)
	No	Perform operation mode for DTCs 21 and 22.

End Of Sie

DTC 15

AME817266350W16

DTC 15	Cruise actuator (control circuit)
DETECTION CONDITION	• Malfunction in cruise actuator circuit (control circuit)
POSSIBLE CAUSE	• Cruise actuator malfunction

Diagnostic procedure

ACTION
REPLACE CRUISE ACTUATOR IF IT IS MALFUNCTIONING • Replace cruise actuator. (See T–78 CRUISE ACTUATOR REMOVAL/INSTALLATION)

ON-BOARD DIAGNOSTIC [AIR BAG SYSTEM]

FOREWORD

AME817401046W01

- In order to improve the operability of the side air bag system (deployment), the software for the SAS unit and side air bag sensor has been changed. Due to this, diagnostic procedures for DTCs 22 and 32 have been changed. Since the procedures for malfunction cause inspection, "Post-repair Operation" and the diagnostic procedures for all other DTCs besides 22 and 32, have not been changed, refer to the current Workshop Manual. (See Mazda MPV Workshop Manual 1666-1*-99F.)

End Of Sie

DTC TABLE

AME817401046W02

- DTCs are common for present and past malfunction diagnosis.

DTC	Output signal	Malfunction location
22		Driver-side side air bag sensor system (Internal circuit abnormal)
32	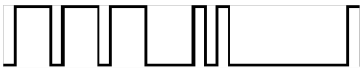	Passenger-side side air bag sensor system (Internal circuit abnormal)

DTC 22

AME817401046W10

DTC 22	Driver-side side air bag sensor system (Internal circuit abnormal)
DETECTION CONDITION	**Warning** • **Detection conditions are for understanding DTC outline before performing inspection. Performing inspection with only detection conditions may cause injury due to operating error or damage the system. When performing inspection, always follow inspection procedure.** **Note** • For vehicles without side air bag, DTC 22, 25, 26, 32, 35, or 37 may be indicated concurrently. In such a case, perform only the smallest DTC troubleshooting among them. **With side air bag** • Malfunction in wiring harness between driver-side side air bag sensor and SAS unit • Malfunction in driver-side side air bag sensor circuit **Without side air bag** • SAS unit connector terminal 2AA is open.
POSSIBLE CAUSE	**With side air bag** • Driver-side side air bag sensor malfunction • Open or short circuit in wiring harness between driver-side side air bag sensor and SAS unit • SAS unit malfunction **Without side air bag** • Malfunction of connector between SAS unit and ground • Open or short circuit in wiring harness between SAS unit and ground • SAS unit malfunction

SAS UNIT CONNECTOR

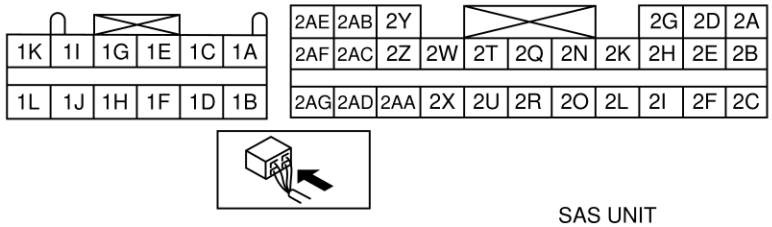

DRIVER-SIDE SIDE AIR BAG SENSOR CONNECTOR

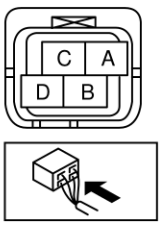

SAS UNIT

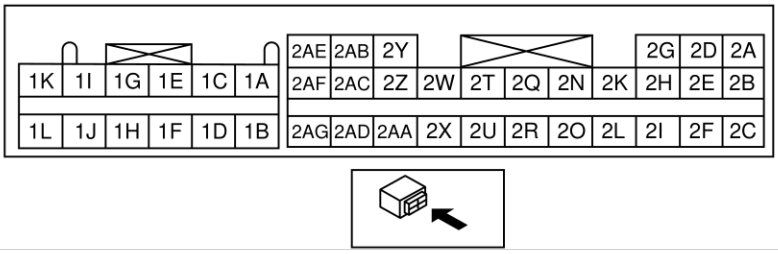

T

Diagnostic procedure

STEP	INSPECTION		ACTION
1	• Is vehicle equipped with side air bag?	Yes	Go to next step.
		No	Go to Step 7.
2	• Turn ignition switch to ON position and wait for **60 minutes or more**. • Is DTC 22 indicated?	Yes	Go to next step.
		No	Troubleshooting completed.
3	**INSPECT WIRING HARNESS BETWEEN DRIVER-SIDE SIDE AIR BAG SENSOR AND SAS UNIT** **Warning** • **Handling air bag system components improperly can accidentally deploy air bag modules and pre-tensioner seat belts, which may seriously injure you. Read AIR BAG SYSTEM SERVICE WARNINGS before handling air bag system components.** • Turn ignition switch to LOCK position. • Disconnect negative battery cable and wait for **more than 1 minute**. • Remove clock spring. • Remove glove compartment. • Disconnect passenger-side air bag module connector. • Disconnect driver and passenger-side side air bag module connectors. • Remove B-pillar lower trims. (Vehicle with pre-tensioner seat belt.) • Disconnect driver and passenger-side pre-tensioner seat belt connectors. (Vehicle with pre-tensioner seat belt) • Turn up floor covering. • Disconnect all SAS unit connectors. • Disconnect driver-side side air bag sensor connector. • Inspect following wiring harness between SAS unit and driver-side side air bag sensor terminals (harness side) for short to ground, short to power supply, and open circuit: — 1B and A — 1D and B — 1F and C — 1E and D • Are wiring harnesses okay?	Yes	**Present malfunction diagnosis:** • Go to next step. **Past malfunction diagnosis:** • Replace driver-side side air bag sensor.
		No	Replace wiring harnesses.
4	**INSPECT GROUND CIRCUIT IN SAS UNIT** • Is there continuity between SAS unit terminals 1F and 2Q?	Yes	Go to next step.
		No	Replace SAS unit.
5	**INSPECT POWER SUPPLY CIRCUIT OF DRIVER-SIDE SIDE AIR BAG SENSOR** • Connect all SAS unit connectors. • Connect clock spring connector. • Connect passenger-side air bag module connector. • Connect driver and passenger-side side air bag module connectors. (Vehicle with pre-tensioner seat belt) • Connect driver and passenger-side pre-tensioner seat belt connectors. • Connect negative battery cable. • Turn ignition switch to ON position. • Measure voltage at driver-side side air bag sensor connector terminal A. • Is voltage **approximately 5 V**?	Yes	Replace driver-side side air bag sensor, then go to next step.
		No	Replace SAS unit.

STEP	INSPECTION		ACTION
6	**VERIFY WHETHER SAS UNIT IS MALFUNCTIONING OR NOT** • Connect driver-side side air bag sensor connector. • Connect negative battery cable. • Turn ignition switch to ON position. • Is DTC 22 indicated?	Yes	Replace SAS unit.
		No	Troubleshooting completed.
7	**VERIFY THAT SAS UNIT CONNECTOR TERMINAL 2AA IS GROUNDED** **Warning** • **Handling air bag system components improperly can accidentally deploy air bag modules and pre-tensioner seat belts, which may seriously injure you. Read AIR BAG SYSTEM SERVICE WARNINGS before handling air bag system components.** • Turn ignition switch to LOCK position. • Disconnect negative battery cable and wait for **more than 1 minute**. • Remove clock spring. • Remove glove compartment. • Disconnect passenger-side air bag module connector. • Disconnect driver and passenger-side pre-tensioner seat belt connectors. (Vehicle with pre-tensioner seat belt) • Remove B-pillar lower trims. (Vehicle with pre-tensioner seat belt.) • Disconnect driver and passenger-side pre-tensioner seat belt connector. (Vehicle with pre-tensioner seat belt) • Turn up floor covering. • Disconnect all SAS unit connectors. • Inspect wiring harness between SAS unit connector terminal 2AA and ground for following. — Short to power supply — Open circuit • Is wiring harness okay?	Yes	**Present malfunction diagnosis:** • Replace SAS unit. **Past malfunction diagnosis:** • Troubleshooting completed.
		No	Replace wiring harness.

T

DTC 32

AME817401046W13

DTC 32	Passenger-side side air bag sensor system (Internal circuit abnormal)
DETECTION CONDITION	**Warning** • **Detection conditions are for understanding DTC outline before performing inspection. Performing inspection with only detection conditions may cause injury due to operating error or damage the system. When performing inspection, always follow inspection procedure.** **Note** • For vehicles without side air bag, DTC 22, 25, 26, 32, 35, or 37 may be indicated concurrently. In such a case, perform only the smallest DTC troubleshooting among them. **With side air bag** • Malfunction in wiring harness between passenger-side side air bag sensor and SAS unit • Malfunction in passenger-side side air bag sensor circuit **Without side air bag** • SAS unit connector terminal 2AA is open.
POSSIBLE CAUSE	**With side air bag** • Passenger-side side air bag sensor malfunction • Open or short circuit in wiring harness between passenger-side side air bag sensor and SAS unit • SAS unit malfunction **Without side air bag** • Malfunction of connector between SAS unit and ground • Open or short circuit in wiring harness between SAS unit and ground • SAS unit malfunction

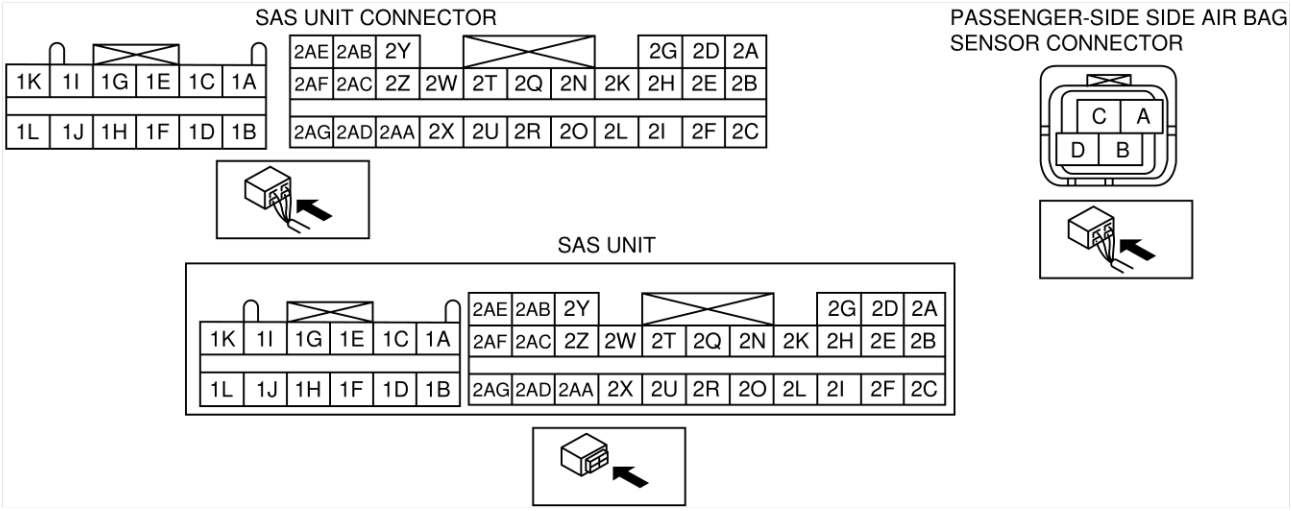

Diagnostic procedure

STEP	INSPECTION		ACTION
1	• Is vehicle equipped with side air bag?	Yes	Go to next step.
		No	Go to Step 7.
2	• Turn ignition switch to ON position and wait for **60 minutes or more**. • Is DTC 32 indicated?	Yes	Go to next step.
		No	Troubleshooting completed.

STEP	INSPECTION		ACTION
3	**INSPECT WIRING HARNESS BETWEEN PASSENGER-SIDE SIDE AIR BAG SENSOR AND SAS UNIT** **Warning** • **Handling air bag system components improperly can accidentally deploy air bag modules and pre-tensioner seat belts, which may seriously injure you. Read AIR BAG SYSTEM SERVICE WARNINGS before handling air bag system components.** • Turn ignition switch to LOCK position. • Disconnect negative battery cable and wait for **more than 1 minute**. • Remove clock spring. • Remove glove compartment. • Disconnect passenger-side air bag module connector. • Disconnect driver and passenger-side side air bag module connectors. • Remove B-pillar lower trims. (Vehicle with pre-tensioner seat belt) • Disconnect driver and passenger-side pre-tensioner seat belt connectors. (Vehicle with pre-tensioner seat belt) • Turn up floor covering. • Disconnect all SAS unit connectors. • Disconnect passenger-side side air bag sensor connector. • Inspect following wiring harness between SAS unit and passenger-side side air bag sensor terminals (harness side) for short to ground, short to power supply, and open circuit: — 1L and A — 1J and B — 1H and C — 1G and D • Are wiring harnesses okay?	Yes	**Present malfunction diagnosis:** • Go to next step. **Past malfunction diagnosis:** • Replace passenger-side side air bag sensor.
		No	Replace wiring harnesses.
4	**INSPECT GROUND CIRCUIT IN SAS UNIT** • Is there continuity between SAS unit terminals 1H and 2Q?	Yes	Go to next step.
		No	Replace SAS unit.
5	**INSPECT POWER SUPPLY CIRCUIT OF PASSENGER-SIDE SIDE AIR BAG SENSOR** • Connect all SAS unit connectors. • Connect clock spring connector. • Connect passenger-side air bag module connector. • Connect driver and passenger-side side air bag module connectors. • Connect driver and passenger-side pre-tensioner seat belt connectors. (Vehicle with pre-tensioner seat belt) • Connect negative battery cable. • Turn ignition switch to ON position. • Measure voltage at passenger-side side air bag sensor connector terminal A. • Is voltage **approximately 5 V**?	Yes	Replace passenger-side side air bag sensor, then go to next step.
		No	Replace SAS unit.
6	**VERIFY WHETHER SAS UNIT IS MALFUNCTIONING OR NOT** • Connect passenger-side side air bag sensor connector. • Connect negative battery cable. • Turn ignition switch to ON position. • Is DTC 32 indicated?	Yes	Replace SAS unit.
		No	Troubleshooting completed.

T

STEP	INSPECTION		ACTION
7	**VERIFY THAT SAS UNIT CONNECTOR TERMINAL 2AA IS GROUNDED** **Warning** • **Handling air bag system components improperly can accidentally deploy air bag modules and pre-tensioner seat belts, which may seriously injure you. Read AIR BAG SYSTEM SERVICE WARNINGS before handling air bag system components.** • Turn ignition switch to LOCK position. • Disconnect negative battery cable and wait for **more than 1 minute**. • Remove clock spring. • Remove glove compartment. • Remove B-pillar lower trims. (Vehicle with pre-tensioner seat belt) • Disconnect driver and passenger-side pre-tensioner seat belt connectors. (Vehicle with pre-tensioner seat belt) • Disconnect passenger-side air bag module connector. • Turn up floor covering. • Disconnect all SAS unit connectors. • Inspect wiring harness between SAS unit connector terminal 2AA and ground for following. — Short to power supply — Open circuit • Is wiring harness okay?	Yes	**Present malfunction diagnosis:** • Replace SAS unit. **Past malfunction diagnosis:** • Troubleshooting completed.
		No	Replace wiring harness.

End Of Ste

TROUBLESHOOTING

CAR-NAVIGATION SYSTEM (EUROPEAN (L.H.D. U.K.) SPECS.)

AME818066900W01

Troubleshooting Index

- Use the chart below verify the trouble in order to diagnose the appropriate area.

No.	Malfunction symptom
1	While vehicle is in reverse, vehicle locator mark goes forward.
2	In navigation mode, vehicle locator mark skips. (Instrument cluster operates normally.)
3	Even when headlight switch is turned on, daytime screen does not change to night time screen. (Front and rear combination lights operate normally.)

End Of Sie

NO.1 WHILE VEHICLE IS IN REVERSE, VEHICLE LOCATOR MARK GOES FORWARD.

AME818066900W02

- When performing an asterisked (*) troubleshooting inspection, shake the wiring harness and connectors while doing the inspection to discover whether poor contact points are the cause of any intermittent malfunctions. If there is a problem, check to make sure connectors, terminals and wiring harness are connected correctly and undamaged.

1	While vehicle is in reverse, vehicle locator mark goes forward.

TROUBLESHOOTING HINTS

- Malfunction in shift position (revese position) signal line of car-navigation unit.
  — Car-navigation unit malfunction
  — Malfunction in wiring harness between car-navigation unit and back-up switch
  — Back-up switch malfunction

Diagnostic procedure

STEP	INSPECTION		ACTION
1	• While the vehicle is in reverse, are back-up lights illuminated?	Yes	Go to next step.
		No	Repair back-up light circuit, then go to next step.
2*	• Disconnect car-navigation unit connector (24-pin). • Turn ignition switch to ON position. • Shift selector lever to revese position. • Measure voltage at the following terminal of car-navigation unit connector (24-pin, harness side): — Terminal 1M (Shift position (revese position) signal) • Is voltage 9 V or more?	Yes	Replace car-navigation unit (available at Clarion service center) or get it repaired at Clarion Service center, Then go to next step.
		No	Inspect wiring harness between car-navigation unit (24-pin, terminal 1M) and back-up light switch, then go to next step.
3	• Does vehicle locator mark indicate actual position of vehicle?	Yes	Complete troubleshooting, then explain repairs to customer.
		No	Recheck malfunction symptoms, then repeat from Step 1 if malfunction recurs.

End Of Sie

T

NO.2 IN NAVIGATION MODE, VEHICLE LOCATOR MARK SKIPS. (INSTRUMENT CLUSTER OPERATES NORMALLY.)

AME818066900W03

2	In navigation mode, vehicle locator mark skips. (Instrument cluster operates normally.)

TROUBLESHOOTING HINTS

- Malfunction in vehicle speed signal line of car-navigation unit.
  - — Car-navigation unit malfunction
  - — Instrument cluster malfunction
  - — Malfunction in wiring harness between car-navigation unit and instrument cluster

Diagnostic procedure

STEP	INSPECTION		ACTION
1	• Disconnect car-navigation unit conductor (24-pin). • Jack up vehicle and run engine at low speed. • Measure voltage at the following terminal of car-navigation unit connector (24-pin): — Terminal 1I (Vehicle speed signal) • Is voltage approx. 2.5 V (reference)? **Note** • Vehicle speed signal is in electrical pulses of approx. 0 V to 5 V.	Yes	Replace car-navigation unit (available at Clarion service center) or get it repaired at Clarion service center, then go to Step 4.
		No	Go to next step.
2*	• Disconnect instrument cluster connector (20-pin). • Is there continuity between car-navigation unit connector (24-pin) terminal 1I and instrument cluster connector (20-pin) terminal 2O?	Yes	Go to next step.
		No	Repair wiring harness between car-navigation unit and instrument cluster, then go to Step 4.
3	• Inspect wiring harness between car-navigation unit connector (24-pin) terminal 1I and instrument cluster connector (20-pin) terminal 2O for short to ground. • Is there short to ground?	Yes	Repair wiring harness between car-navigation unit and instrument cluster, then go to next step.
		No	Replace instrument cluster, then go to next step.
4	• Does vehicle locator mark operate normally?	Yes	Complete troubleshooting, then explain repairs to customer.
		No	Recheck malfunction symptoms, then repeat from Step 1 if malfunction recurs.

End Of Sie

NO.3 EVEN WHEN HEADLIGHT SWITCH IS TURNED ON, DAYTIME SCREEN DOES NOT CHANGE TO NIGHT TIME SCREEN. (FRONT AND REAR COMBINATION LIGHTS OPERATE NORMALLY.)

AME818066900W04

3	Even when headlight switch is turned on, daytime screen does not change to night time screen. (Front and rear combination lights operate normally.)

TROUBLESHOOTING HINTS

- Malfunction in TNS (+) signal line of car-navigation unit
  - — Car-navigation unit malfunction
  - — Malfunction in wiring harness between car navigation unit and TNS relay

Diagnostic procedure

STEP	INSPECTION		ACTION
1*	• Turn headlight switch on. • Measure voltage at the following terminal of car-navigation unit connector (24-pin): — Terminal 1E (TNS (+) signal) • Is voltage 10 V or more?	Yes	Replace car navigation unit (available at Clarion service center) or get it repaired at Clarion service center, then go to next step.
		No	Repair wiring harness between car navigation unit and TNS relay, then go to next step.
2	• When headlight switch is turned on, does daytime screen change to night time screen?	Yes	Complete troubleshooting, then explain repairs to customer.
		No	Recheck malfunction symptoms, then repeat from Step 1 if malfunction recurs.

End Of Sie

AIR BAG SYSTEM

AME818001046W01

Foreword

- Refer to section GI. Thoroughly read and understand the basic flow of troubleshooting in order to properly perform the procedures.

Troubleshooting Index

- Use the chart below verify the symptoms of the trouble in order to diagnose the appropriate area.

No.	Malfunction symptom
1	Air bag system warning light does not illuminate when ignition switch is turned to ON position.
2	Air bag system warning light illuminates immediately after ignition switch is turned to ON position and remains illuminated.
3	European (L.H.D. U.K.) specs. Passenger-side air bag cut-off indicator light does not dim when ignition switch is at ON position and headlight switch is turned to TNS or headlight position. (Child restraint seat built in resonator is attached to passenger-side seat.)
4	European (L.H.D. U.K.) specs. Passenger-side air bag cut-off indicator light remains dimmed when ignition switch is at ON position and headlight switch is turned off form TNS or headlight position. (Child restraint seat built in resonator is attached to passenger-side seat.)

Symptom Troubleshooting

Note

- The following may be the cause of trouble if the symptom does not go away after the symptom troubleshooting steps are followed.
  - — Simultaneous poor contact at short connector terminals B and P between METER 10A fuse and SAS unit, ENGINE 10 A fuse and the SAS unit.
  - — Simultaneous poor contact at terminals 2T and 2Q of SAS unit connector.
  - — Simultaneous poor contact at terminals 2E and 2H of SAS unit connector.
  - — Poor contacts in wiring harness between terminal 2T of SAS unit connector and ground, and between terminal 2Q and ground at the same time.
  - — Poor contacts or short circuits in wiring harness between METER 10 A fuse and SAS unit, and between ENGINE 10 A fuse and SAS unit at the same time.

End Of Ste

NO.1 AIR BAG SYSTEM WARNING LIGHT DOES NOT ILLUMINATE WHEN IGNITION SWITCH IS TURNED TO ON POSITION

AME818001046W02

- When performing an asterisked (*) troubleshooting inspection, shake the wiring harness and connectors while doing the inspection to discover whether poor contact points are the cause of any intermittent malfunctions. If there is a problem, check to make sure connectors, terminals and wiring harness are connected correctly and undamaged.

1	Air bag system warning light does not illuminate when ignition switch is turned to ON position.

TROUBLESHOOTING HINTS

- Malfunction in air bag system warning light circuit
  - — Instrument cluster (print plate) malfunction
  - — Air bag system warning light bulb malfunction
  - — Poor contact in instrument cluster connector (24 pin)
  - — Open or short circuit in wiring harness between instrument cluster and SAS unit
  - — SAS unit malfunction

Note

- When inserting insulator between SAS unit connector terminals and short bar, insert it as shown in the figure.

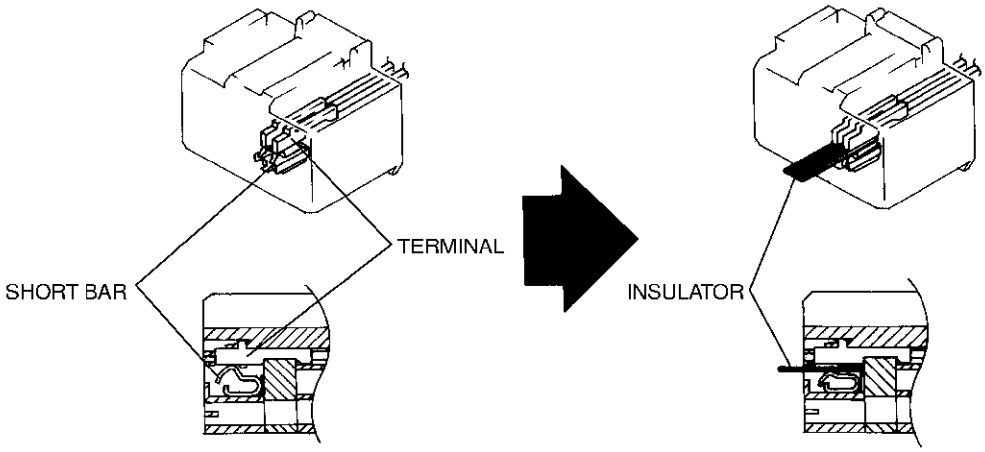

Diagnostic procedure

STEP	INSPECTION		ACTION
1	**INSPECT OTHER WARNING AND INDICATOR LIGHTS CIRCUIT IN INSTRUMENT CLUSTER** • Turn ignition switch to ON position. • Do other warning and indicator lights illuminate?	Yes	Turn ignition switch to LOCK position, then go to next step.
		No	Inspect instrument cluster power supply system and ground system, then go to Step 6.
2	**INSPECT AIR BAG SYSTEM WARNING LIGHT BULB** • Disconnect negative battery cable. • Remove instrument cluster. • Is air bag system warning light bulb functional?	Yes	Reinstall it properly, then go to next step.
		No	Replace bulb, then go to Step 6.

STEP	INSPECTION		ACTION
* 3	**INSPECT WIRING HARNESS BETWEEN SAS UNIT AND INSTRUMENT CLUSTER FOR CONTINUITY** **Warning** • **Handling air bag system components improperly can accidentally deploy air bag modules and pre-tensioner seat belts, which may seriously injure you. Read AIR BAG SYSTEM SERVICE WARNINGS before handling air bag system components.** • Remove clock spring. • Remove glove compartment. • Disconnect passenger-side air bag module connector. • Disconnect driver and passenger-side side air bag module connectors. (Vehicle with side air bag) • Remove B-pillar lower trims. (Vehicle with pre-tensioner seat belt) • Disconnect driver and passenger-side pre-tensioner seat belt connectors. (Vehicle with pre-tensioner seat belt) • Turn up floor covering. • Disconnect all SAS unit connectors. • Is there continuity between SAS unit connector terminal 2W and instrument cluster connector terminal 3R?	Yes	Go to next step.
		No	Replace wiring harness, then go to Step 6.
* 4	**INSPECT WIRING HARNESS BETWEEN SAS UNIT AND INSTRUMENT CLUSTER FOR SHORT TO POWER SUPPLY** • Connect negative battery cable. **Caution** • **Be sure not to cause damage to short bar when inserting insulator. If short bar is damaged, you may not be able to properly inspect connection of SAS unit connector.** • Insert insulator between SAS unit connector terminals 2W and 2T so short bar cannot function. • Turn ignition switch to ON position. • Measure voltage at instrument cluster connector terminal 3R. • Is voltage **more than approximately 9 V**?	Yes	Replace wiring harness, then go to Step 6.
		No	Go to next step.
5	**VERIFY WHETHER MALFUNCTION IS IN AIR BAG SYSTEM WARNING LIGHT IN INSTRUMENT CLUSTER OR SAS UNIT** • Connect instrument cluster connector terminal 3R to ground, then reconnect connector. • Does air bag system warning light illuminate with ignition switch ON?	Yes	Replace SAS unit, then go to next step.
		No	Replace instrument cluster, then go to next step.

T

STEP	INSPECTION		ACTION
6	**VERIFY WHETHER MALFUNCTION SYMPTOM OCCURS AFTER REPAIR OR NOT** • Connect all SAS unit connectors. • Connect driver and passenger-side pre-tensioner seat belt connectors.(Vehicle with pre-tensioner seat belt) • Connect driver- and passenger-side side air bag module connectors. (Vehicle with side air bag) • Connect passenger-side air bag module connector. • Connect clock spring connector. • Connect instrument cluster connector. • Connect negative battery cable. • Turn ignition switch to ON position. • Does air bag system warning light operate properly?	Yes	Complete troubleshooting, then explain repairs to customer.
		No	Recheck malfunction symptoms, then repeat from Step 1 if malfunction recurs.

End Of Sta

NO.2 AIR BAG SYSTEM WARNING LIGHT ILLUMINATES IMMEDIATELY AFTER IGNITION SWITCH IS TURNED TO ON POSITION AND REMAINS ILLUMINATED

AME818001046W03

- When performing an asterisked (*) troubleshooting inspection, shake the wiring harness and connectors while doing the inspection to discover whether poor contact points are the cause of any intermittent malfunctions. If there is a problem, check to make sure connectors, terminals and wiring harness are connected correctly and undamaged.

2	**Air bag system warning light illuminates immediately after ignition switch is turned to ON position and remains illuminated.**

TROUBLESHOOTING HINTS

- Malfunction in air bag system warning light circuit
  - — Instrument cluster (print plate) malfunction
  - — Malfunction of short bar between SAS unit connector terminals 2W and 2T
  - — No connection in SAS unit connector
  - — Short circuit in wiring harness between instrument cluster and SAS unit
  - — SAS unit malfunction

Note

- When inserting insulator between SAS unit connector terminals and short bar, insert it as shown in the figure.

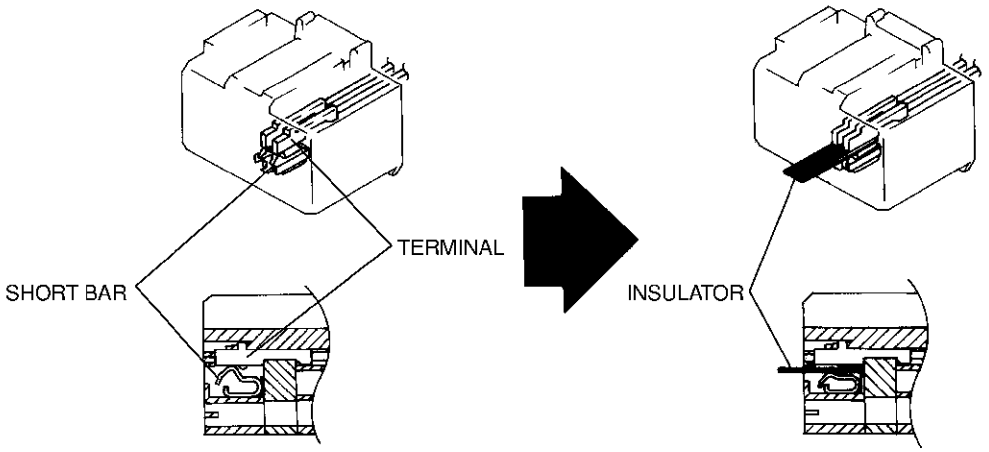

Diagnostic procedure

STEP	INSPECTION		ACTION
1	**VERIFY THAT SAS UNIT CONNECTOR IS CONNECTED** **Warning** • **Handling air bag system components improperly can accidentally deploy air bag modules and pre-tensioner seat belts, which may seriously injure you. Read AIR BAG SYSTEM SERVICE WARNINGS before handling air bag system components.** • Turn ignition switch to LOCK position. • Disconnect negative battery cable and wait for **more than 1 minute**. • Turn up floor covering. • Are all SAS unit connectors securely connected?	Yes	Go to next step.
		No	Reconnect connector properly, then go to Step 6.
2	**INSPECT SAS UNIT TERMINALS 2W AND 2T** • Remove clock spring. • Remove glove compartment. • Disconnect passenger-side air bag module connector. • Disconnect driver and passenger-side side air bag module connectors. (Vehicles with side air bag) • Remove B-pillar lower trims. (Vehicle with pre-tensioner seat belt) • Disconnect driver- and passenger-side pre-tensioner seat belt connectors. (Vehicle with pre-tensioner seat belt) • Disconnect all SAS unit connectors. • Is short bar between SAS unit connector terminals 2W and 2T bent?	Yes	Replace wiring harness, then go to Step 6.
		No	Go to next step.
3	**INSPECT SHORT BAR HOOK OF SAS unit** • Is short bar hook of SAS unit okay?	Yes	Go to next step.
		No	Replace SAS unit, then go to Step 6.
* 4	**INSPECT WIRING HARNESS BETWEEN SAS UNIT AND INSTRUMENT CLUSTER FOR SHORT TO GROUND** • Remove instrument cluster. **Caution** • **Be sure not to cause damage to short bar when inserting insulator. If short bar is damaged, you may not be able to properly inspect connection of SAS unit connector.** • Insert insulator between SAS unit connector terminals 2W and 2T so short bar cannot function. • Is there continuity between SAS unit connector terminal 2W and ground?	Yes	Replace wiring harness, then go to Step 6.
		No	Go to next step.
5	**INSPECT FOR SHORT TO GROUND IN INSTRUMENT CLUSTER CIRCUIT** • Is there continuity between terminal 3R and any of following terminals of print plate on instrument cluster? — Terminal 3D — Terminal 3A	Yes	Replace instrument cluster, then go to next step.
		No	Replace SAS unit, then go to next step.

T

STEP	INSPECTION		ACTION
6	**VERIFY WHETHER MALFUNCTION SYMPTOM OCCURS AFTER REPAIR OR NOT** • Connect all SAS unit connectors. • Connect driver and passenger-side pre-tensioner seat belt connectors.(Vehicle with pre-tensioner seat belt) • Disconnect driver and passenger-side side air bag module connectors. (Vehicle with side air bag) • Connect passenger-side air bag module connector. • Connect clock spring connector. • Connect instrument cluster connector. • Connect negative battery cable. • Turn ignition switch to ON position. • Does air bag system warning light operate properly?	Yes	Complete troubleshooting, then explain repairs to customer.
		No	Recheck malfunction symptoms, then repeat from Step 1 if malfunction recurs.

End Of Sta

NO.3 PASSENGER-SIDE AIR BAG CUT-OFF INDICATOR LIGHT DOES NOT DIM WHEN IGNITION SWITCH IS AT ON POSITION AND HEADLIGHT SWITCH IS TURNED TO TNS OR HEADLIGHT POSITION. (CHILD RESTRAINT SEAT BUILT IN RESONATOR IS ATTACHED TO PASSENGER-SIDE SEAT.)

AME818001046W04

- When performing an asterisked (*) troubleshooting inspection, shake the wiring harness and connectors while doing the inspection to discover whether poor contact points are the cause of any intermittent malfunctions. If there is a problem, check to make sure connectors, terminals and wiring harness are connected correctly and undamaged.

3	**European (L.H.D. U.K.)specs.** **Passenger-side air bag cut-off indicator light does not dim when ignition switch is at ON position and headlight switch is turned to TNS or headlight position. (Child restraint seat built in resonator is attached to passenger-side seat.)**
TROUBLESHOOTING HINTS • Malfunction TNS signal circuit — SAS unit malfunction — TNS signal circuit malfunction — Terminal 3F of SAS unit connector malfunction — Poor connection at terminal 3F of SAS unit connector — Open circuit in wiring harness between TNS relay and SAS unit	

Diagnostic procedure

STEP	INSPECTION		ACTION
1	**VERIFY WHETHER MALFUNCTION IS IN TNS SIGNAL CIRCUIT OR ELSEWHERE** • Does parking light illuminate when headlight switch is turned to TNS or headlight position?	Yes	Go to next step.
		No	Inspect TNS signal circuit, then go to Step 5.

STEP	INSPECTION		ACTION
2	**INSPECT SAS UNIT TERMINAL 3F** **Warning** • **Handling air bag system components improperly can accidentally deploy air bag modules and pre-tensioner seat belts, which may seriously injure you. Read SERVICE WARNINGS before handling air bag system components.** • Turn ignition switch to LOCK position. • Disconnect negative battery cable and wait for **more than 1 minute**. • Remove clock spring. • Remove glove compartment. • Disconnect passenger-side air bag module connector. • Disconnect driver and passenger-side side air bag module connectors. (With side air bag) • Remove B-pillar lower trims. • Disconnect driver- and passenger-side pre-tensioner seat belt connectors. • Turn up floor covering. • Disconnect all SAS unit connectors. • Is terminal 3F of SAS unit damaged?	Yes	Replace SAS unit, then go to Step 5.
		No	Go to next step.
3	**INSPECT SAS UNIT CONNECTOR TERMINAL 3F** • Is terminal 3F of SAS unit connector damaged?	Yes	Replace wiring harness, then go to Step 5.
		No	Go to next step.
*4	**INSPECT WIRING HARNESS BETWEEN SAS UNIT AND TNS RELAY FOR CONTINUITY** • Disconnect TNS relay connector. • Is there continuity between terminal 3F of SAS unit connector and terminal D of TNS relay connector?	Yes	Replace SAS unit, then go to next step.
		No	Replace wiring harness between SAS unit and TNS relay, then go to next step.
5	**VERIFY THAT MALFUNCTION SYMPTOM OCCURS AFTER REPAIR** • Connect al SAS unit connectors. • Connect driver and passenger-side pre-tensioner seat belt connectors.(Vehicle with pre-tensioner seat belt) • Connect driver and passenger-side side air bag module connectors. (Vehicle with side air bag) • Connect passenger-side air bag module connector. • Connect clock spring connector. • Connect TNS relay connector. • Connect instrument cluster connector. • Connect negative battery cable. • Turn headlight switch to TNS or headlight position. • Turn ignition switch to ON position. • Does passenger-side air bag cut-off indicator light illuminate for **approximately 6 seconds** and then dim?	Yes	Complete troubleshooting, then explain repairs to customer.
		No	Recheck malfunction symptoms, then repeat from Step 1 if malfunction recurs.

End Of Sta

NO.4 PASSENGER-SIDE AIR BAG CUT-OFF INDICATOR LIGHT REMAINS DIMMED WHEN IGNITION SWITCH IS AT ON POSITION AND HEADLIGHT SWITCH IS TURNED OFF. (CHILD RESTRAINT SEAT BUILT IN RESONATOR IS ATTACHED TO PASSENGER-SIDE SEAT.)

AME818001046W05

- When performing an asterisked (*) troubleshooting inspection, shake the wiring harness and connectors while doing the inspection to discover whether poor contact points are the cause of any intermittent malfunctions. If there is a problem, check to make sure connectors, terminals and wiring harness are connected correctly and undamaged.

4	**European (L.H.D. U.K.) specs. Passenger-side air bag cut-off indicator light remains dimmed when ignition switch is at ON position and headlight switch is turned off. (Child restraint seat built in resonator is attached to passenger-side seat.)**

TROUBLESHOOTING HINTS

- Malfunction in TNS signal circuit
  - — SAS unit malfunction
  - — TNS signal circuit malfunction
  - — Short circuit in wiring harness between TNS relay and SAS unit

Diagnostic procedure

STEP	INSPECTION		ACTION
1	**VERIFY WHETHER MALFUNCTION IS IN TNS SIGNAL CIRCUIT IN SAS UNIT OR ELSEWHERE** • Does parking light illuminate even when headlight switch is turned off?	Yes	Go to next step.
		No	Replace SAS unit, then go to Step 4.
2	**VERIFY WHETHER MALFUNCTION IS IN TNS SIGNAL CIRCUIT IN SAS UNIT OR ELSEWHERE** • Does parking light illuminate when TNS relay connector is disconnected?	Yes	Go to next step.
		No	Inspect following TNS signal circuit: • TNS relay (See T–28 RELAY INSPECTION) • Combination switch (headlight switch) • Related wiring harnesses. • Replace or repair malfunction part(s).
*3	**VERIFY WHETHER MALFUNCTION IS IN WIRING HARNESS (BETWEEN SAS UNIT AND TNS RELAY FOR SHORT TO B+) OR SAS UNIT** **Warning** • **Handling air bag system components improperly can accidentally deploy air bag modules and pre-tensioner seat belts, which may seriously injure you. Read SERVICE WARNINGS before handling air bag system components.** • Turn ignition switch to LOCK position. • Disconnect negative battery cable and wait for **more than 1 minute**. • Remove clock spring. • Remove glove compartment. • Disconnect passenger-side air bag module connector. • Disconnect driver and passenger-side side air bag module connectors. (With side air bag) • Remove B-pillar lower trims.(Vehicle with pre-tensioner seat belt) • Disconnect driver and passenger-side pre-tensioner seat belt connector.(Vehicle with pre-tensioner seat belt) • Turn up floor covering. • Disconnect all SAS unit connectors. • Disconnect TNS relay connector. • Connect negative battery cable. • Turn ignition switch to ON position. • Measure voltage at terminal 3F of SAS unit connector. • Is voltage **more than approximately 9 V**?	Yes	Replace wiring harness between SAS unit and TNS relay, then go to Step 4.
		No	Replace SAS unit, then go to next step.

STEP	INSPECTION		ACTION
4	**VERIFY THAT MALFUNCTION SYMPTOM OCCURS AFTER REPAIR** • Connect all SAS unit connectors. • Connect driver and passenger-side pre-tensioner seat belt connectors.(Vehicle with pre-tensioner seat belt) • Connect driver and passenger-side side air bag module connectors. (Vehicle with side air bag) • Connect passenger-side air bag module connector. • Connect clock spring connector. • Connect TNS relay connector. • Connect negative battery cable. • Attach child restraint seat built in resonator to passenger-side seat. • Turn headlight switch to OFF position. • Turn ignition switch to ON position. • Does passenger-side air bag cut-off indicator light illuminate for **approximately 6 seconds** and then stay on without dimming?	Yes	Complete troubleshooting, then explain repairs to customer.
		No	Recheck malfunction symptoms, then repeat from Step 1 if malfunction recurs.

End Of Ste

T

HEATER AND AIR CONDITIONER SYSTEMS

FEATURES

OUTLINE U-2
OUTLINE OF CONSTRUCTION U-2
FEATURES U-2
SPECIFICATIONS U-2
BASIC SYSTEM U-3
AIRFLOW DISTRIBUTION U-3
CONTROL SYSTEM U-4
WATER HEATER SYSTEM U-4
ON-BOARD DIAGNOSTIC FUNCTION U-6

SERVICE

OUTLINE U-7
SUPPLEMENTAL SERVICE INFORMATION U-7
BASIC SYSTEM U-7
A/C COMPRESSOR REMOVAL/INSTALLATION U-7
HEATER PIPE AND HOSE COMPONENT REMOVAL/INSTALLATION U-8
REFRIGERANT LINES REMOVAL/INSTALLATION U-10
CONTROL SYSTEM U-12
WATER HEATER UNIT REMOVAL/INSTALLATION U-12
FUEL PUMP (WATER HEATER SYSTEM) REMOVAL/INSTALLATION U-14
FUEL PUMP (WATER HEATER SYSTEM) INSPECTION U-14
FRONT BLOWER MOTOR REMOVAL/INSTALLATION U-15
MAGNETIC CLUTCH DISASSEMBLY/ASSEMBLY U-15
MAGNETIC CLUTCH INSPECTION U-16
REFRIGERANT PRESSURE SWITCH INSPECTION U-17
ON-BOARD DIAGNOSTIC U-18
FOREWORD U-18
DTC TABLE U-18
PID/DATA MONITOR TABLE U-18-1
DTC B1317 ..... U-19
DTC B1318 ..... U-19
DTC B1342, B2463, B2537, B2538, B2547, B2548 ..... U-20
DTC B2449, B2450 ..... U-20
DTC B2451, B2452 ..... U-20
DTC B2453, B2454 ..... U-21
TROUBLESHOOTING U-22
FOREWORD U-22
TROUBLESHOOTING INDEX U-22
NO.1 AIR FROM VENT NOT COLD ENOUGH U-22
NO.2 NO COOL AIR U-25
NO.3 NOISE WHILE OPERATING A/C SYSTEM U-28

OUTLINE

OUTLINE OF CONSTRUCTION

AME850201038W01

- The construction and operation of the heater and air conditioner system is essentially carried over from that of the previous MPV (LW) model, except for the following features. (See MPV Training Manual 3340-1*-99F.)

End Of Sie

FEATURES

AME850201038W02

Improved visibility

- The window defogging effect, when air volume is increased in HEAT mode, has been improved.

Improved comfort

- The water heater system has been adopted. (For MZR-CD (RF Turbo))

End Of Sie

SPECIFICATIONS

AME850201038W03

Item			Specification
REFRIGERANT SYSTEM			
Refrigerant	Type		R-134a
	Regular amount (g {oz})	Twin A/C	800 {28.2}
		Single A/C	600 {21.2}
BASIC SYSTEM			
Heating capacity (kW {kcal/h})		Front	5.580 {4,799}
		Rear	1.500 {1,290}
Cooling capacity (kW {kcal/h})		Front	5.800 {4,988}
		Rear	1.200 {1,032}
A/C compressor	Type		Swash plate
	Discharge capacity (ml {cc, fl oz} /rev)		177 {177, 5.98}
	Max. allowable speed (rpm)		6,000
	Lubricating	Type	ND-OIL 8
		Sealed volume (ml {cc, fl oz})	160 {160, 5.41}
Condenser	Type		Multiflow (sub-cooling system)
	Radiated heat (kW {kcal/h})		8.88 {7,600}
Receiver/drier	Capacity (ml {cc, fl oz})		250 {250, 8.45}
	Desiccant		XH-7
Expansion valve	Type		External pressure equalizer
Evaporator	Type		Drawn cup
CONTROL SYSTEM			
Airflow volume (during heater operation)	Blower motor (m^3/h)	Front	380
		Rear	115
Electricity consumption (during heater operation)	Blower motor (W)	Front	192
		Rear	100
Airflow volume (during air conditioner operation)	Blower motor (m^3/h)	Front	530
		Rear	180
Electricity consumption (during air conditioner operation)	Blower motor (W)	Front	246
		Rear	100
	Magnetic clutch (W)		40
Magnetic clutch	Clearance (mm {in})		0.35—0.65 {0.014—0.025}
Blower motor	Fan type		Shroud fan
Temperature control			Reheat full air mix type

Item		Specification
Refrigerant pressure switch	Type	Australian specs. Dual pressure
	Operating pressure (MPa {kgf/cm^2, psi})	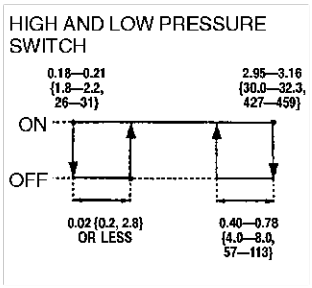
	Type	European, General (R.H.D. L.H.D.) specs. Triple pressure
	Operating pressure (MPa {kgf/cm^2, psi})	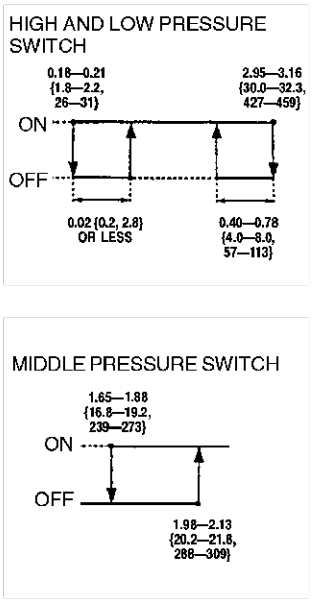
Pressure relief valve	Operating pressure (MPa {kgf/cm^2, psi})	3.44—4.13 {35.0—42.2, 498—600}

Bold frames: New specification

End Of Sta

BASIC SYSTEM

AIRFLOW DISTRIBUTION

AME851601040W01

Front

- The ratio of air volume from each vent has been changed.

Airflow mode	Distribution (%)		
	Center and side vent	Front and rear heat	Defroster and side demister
VENT	90	10	0
BI-LEVEL	60	40	0
HEAT	0 (20)	80 (40)	20 (40)
HEAT/DEF	0 (20)	50 (40)	50 (40)
DEFROSTER	0 (20)	0 (0)	100 (80)

( ) : For the system which side vents are open.

End Of Sta

CONTROL SYSTEM

WATER HEATER SYSTEM

AME854000169W01

Outline

- To improve heating capability directly after a cold start, a water heater system has been adopted for MZR-CD (RF Turbo) model.
- Within the water heater unit, fuel is combusted and used to heat the engine coolant.
- The heated coolant is then passed through the heater core, which uses it to provide heated air to the vehicle cabin.

Structural View

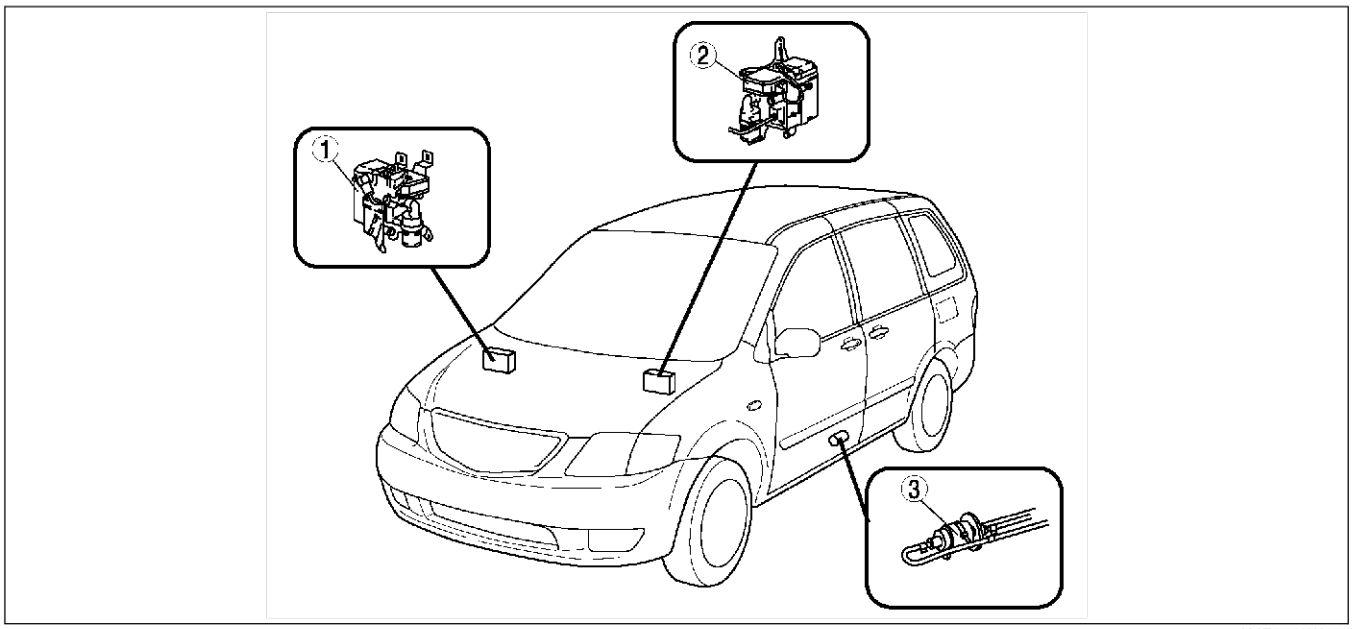

AME8540W101

1	Water heater unit (L.H.D.)
2	Water heater unit (R.H.D.)
3	Fuel pump (water heater system)

Water Heater System Diagram

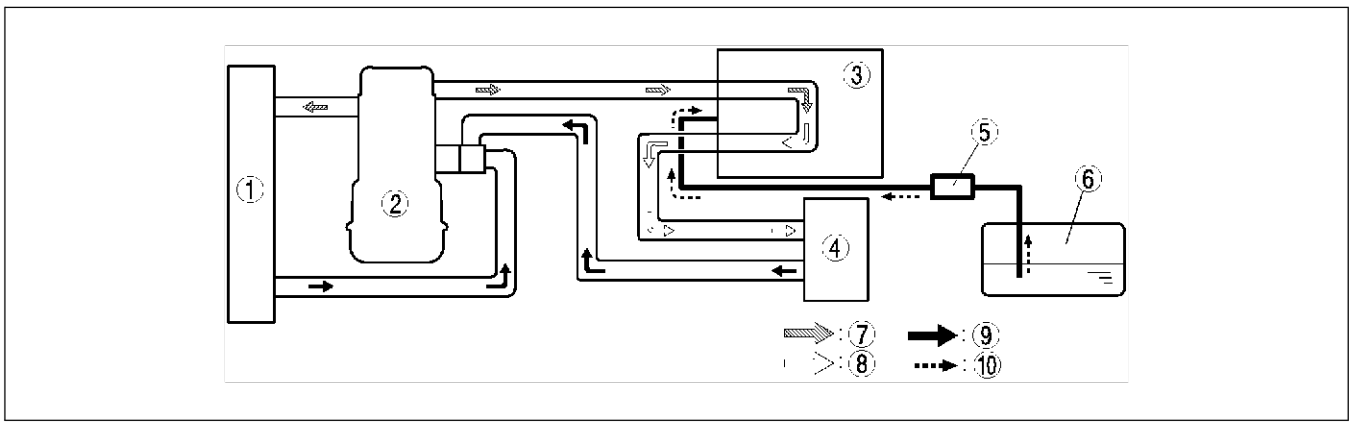

AME8540W102

1	Radiator
2	Engine (MZR-CD (RF Turbo))
3	Water heater unit
4	Heater core
5	Fuel pump (water heater system)
6	Fuel tank
7	Water heated by engine
8	Water heated by water heater unit
9	Cold water
10	Fuel

Block Diagram

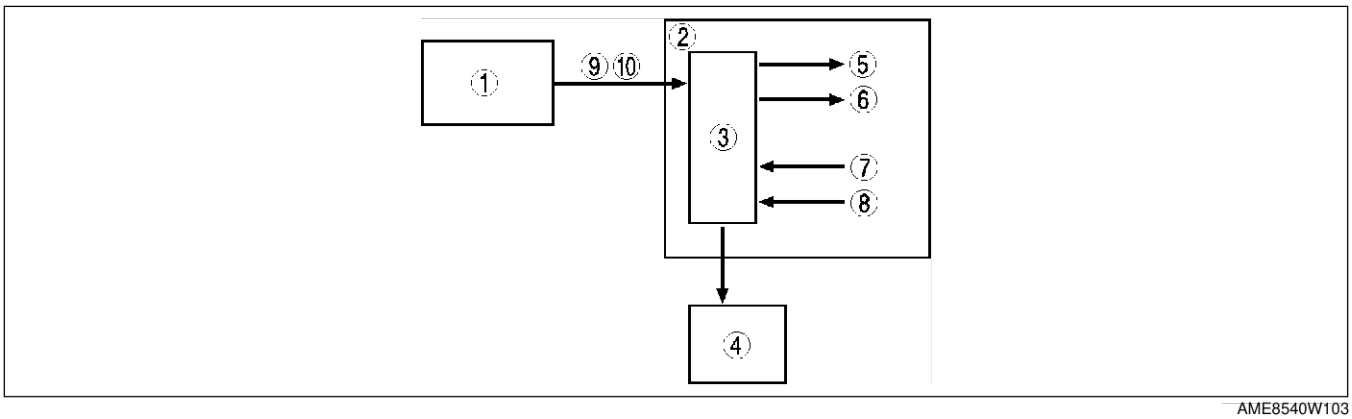

AME8540W103

1	PCM
2	Water heater unit
3	CPU
4	Fuel pump (water heater system)
5	Blower fan

6	Glow plug
7	Water temperature sensor (built into water heater unit)
8	Flame detection sensor
9	Crankshaft position (CKP) sensor signal
10	Intake air temperature (IAT) sensor No. 2 signal

Operation

Water heater system starting conditions

- The water heater system will start to operate when all of the following conditions are met:
  - — Engine running (CKP sensor signal)
  - — Ambient temperature less than 8 °C {46 °F} (IAT sensor No. 2 signal)
  - — Water temperature less than 74 °C {165 °F} (Water temperature sensor)

Normal operation

- The CPU in the water heater unit outputs a signal to the blower fan and fuel pump, which then deliver air and fuel to the unit.
- Within the unit, fuel is vaporized and mixed with air, and then sent to the combustion chamber.
- The mixture is ignited, by a spark from the glow plug, in the combustion chamber.
- Engine coolant temperature is raised as it circulates along the outside of the combustion chamber.

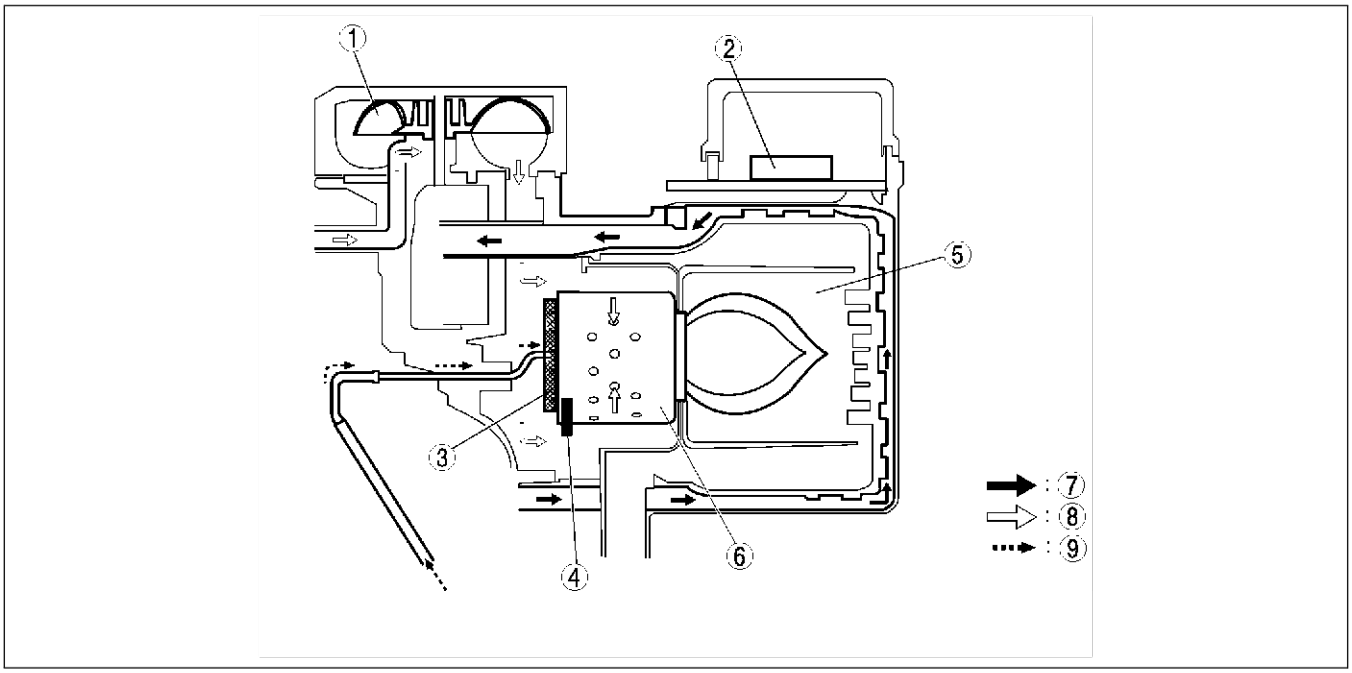

AME8540W008

1	Blower fan
2	CPU
3	Vaporizer
4	Glow plug/Flame detection sensor

5	Combustion chamber
6	Burner
7	Water
8	Air
9	Fuel

Full/half switching

- Depending on the engine coolant temperature, the CPU sets the flame to either full or half strength settings.

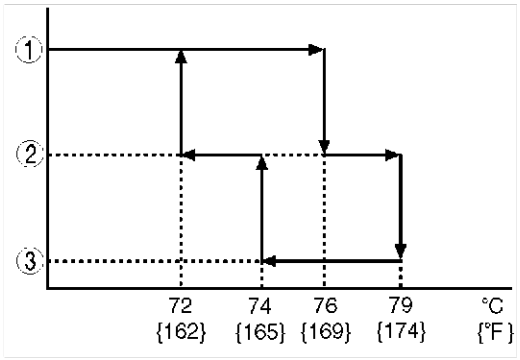

AME8540W009

1	Full mode
2	Half mode
3	Idle mode

Fail-safe Function

- When the flame detection sensor detects that there is no flame, the CPU stops operation of the fuel pump.

End Of Sie

ON-BOARD DIAGNOSTIC FUNCTION

AME854000169W02

Outline

- The CPU determines that there is a malfunction, and outputs a signal as a DTC to the DLC-2.
- Using an **SST** (WDS or equivalent), DTCs can be displayed and deleted.

DTC Table

DTC	Possible cause
B1317	Input voltage high
B1318	Input voltage low
B1342	Malfunction in water heater unit
B2449	Glow plug circuit short to ground
B2450	Glow plug circuit open
B2451	Fuel pump circuit short to ground
B2452	Fuel pump circuit open
B2453	Blower fan circuit short to ground
B2454	Blower fan circuit open
B2463	Overheat
B2537	Water heater system does not start
B2538	Unstable flame
B2547	Flame prior to operation
B2548	Water heater lockout mode

* : If a DTC not listed above is detected, there is a water heater malfunction, and the water heater must be replaced.

End Of Sie

OUTLINE

SUPPLEMENTAL SERVICE INFORMATION

AME850201038W04

- The following changes additions, or both have been made since publication of the below manuals.
  — MPV Workshop Manual (1666-1*-99F)
  — MPV Workshop Manual Supplement (1700-1*-00H)

A/C compressor
- Removal/installation procedure has been modified.

Heater pipe
- Removal/installation procedure has been modified.

Refrigerant lines
- Removal/installation procedure has been modified.

Front blower motor
- Removal/installation procedure has been modified.

Magnetic clutch
- Disassembly/assembly procedure has been modified.
- Inspection procedure has been modified.
- Adjustment procedure has been modified.

Refrigerant pressure switch
- Inspection procedure has been modified.

Water heater unit
- Removal/installation procedure has been added.

Fuel pump (water heater system)
- Removal/installation procedure has been added.
- Inspection procedure has been added.

Water heater system
- On-board diagnostic system has been added.

Air conditioning system
- Troubleshooting procedure has been modified.

End Of Sub

BASIC SYSTEM

A/C COMPRESSOR REMOVAL/INSTALLATION

AME851661450W01

1. Disconnect the negative battery cable.
2. Discharge the refrigerant from the system.
3. Remove the right side splash shield.
4. Loosen the drive belt and remove it.

Caution
- **If moisture or foreign material enters the refrigeration cycle, cooling ability will be lowered and abnormal noise will occur. Always immediately plug open fittings after removing any refrigeration cycle parts to keep moisture or foreign material out of the cycle.**
- **Do not allow A/C compressor oil to spill. Operating the A/C compressor without sufficient A/C compressor oil can lead to abnormal noise and cause the A/C compressor to seize up.**

5. Remove in the order indicated in the table.

1	Cooler hose (HI) or front cooler pipe No.4 (See U–10 REFRIGERANT LINES REMOVAL/ INSTALLATION)
2	Cooler hose (LO) (See U–10 REFRIGERANT LINES REMOVAL/ INSTALLATION)
3	Connector
4	A/C compressor

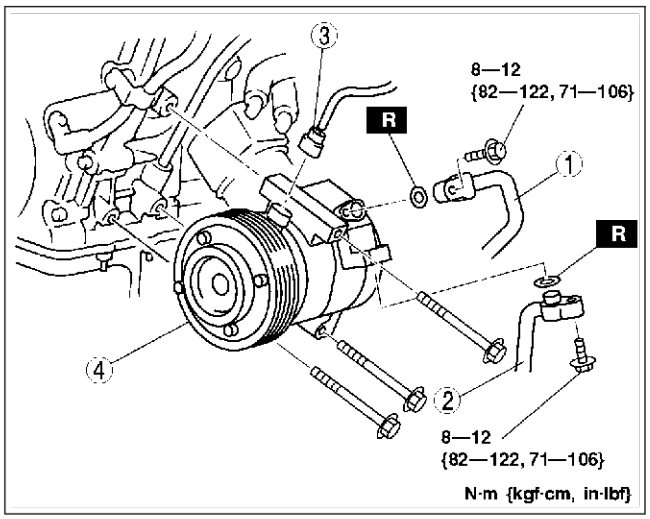

AME8516W003

6. Install in the reverse order of removal.
7. Adjust the drive belt.
8. Perform the refrigerant system performance test.

End Of Sub

HEATER PIPE AND HOSE COMPONENT REMOVAL/INSTALLATION

AME851661220W01

MZR-CD (RF Turbo)

1. Drain the engine coolant. (See E–10 ENGINE COOLANT REPLACEMENT.)
2. Remove in the order indicated in the table.
3. Remove the following parts, depending on rear heater pipe to be removed.

Rear heater pipe to be removed	Parts to be removed
Rear heater pipe No.1	• Front crossmember (See R–5 FRONT CROSSMEMBER REMOVAL/INSTALLATION) • Rear cooler pipe No.1 (See U–10 REFRIGERANT LINES REMOVAL/INSTALLATION)
Rear heater pipe No.2	• Rear cooler pipe No.2 (See U–10 REFRIGERANT LINES REMOVAL/INSTALLATION)

4. Install in the reverse order of removal.
5. Refill the engine coolant. (See E–10 ENGINE COOLANT REPLACEMENT.)

FRONT

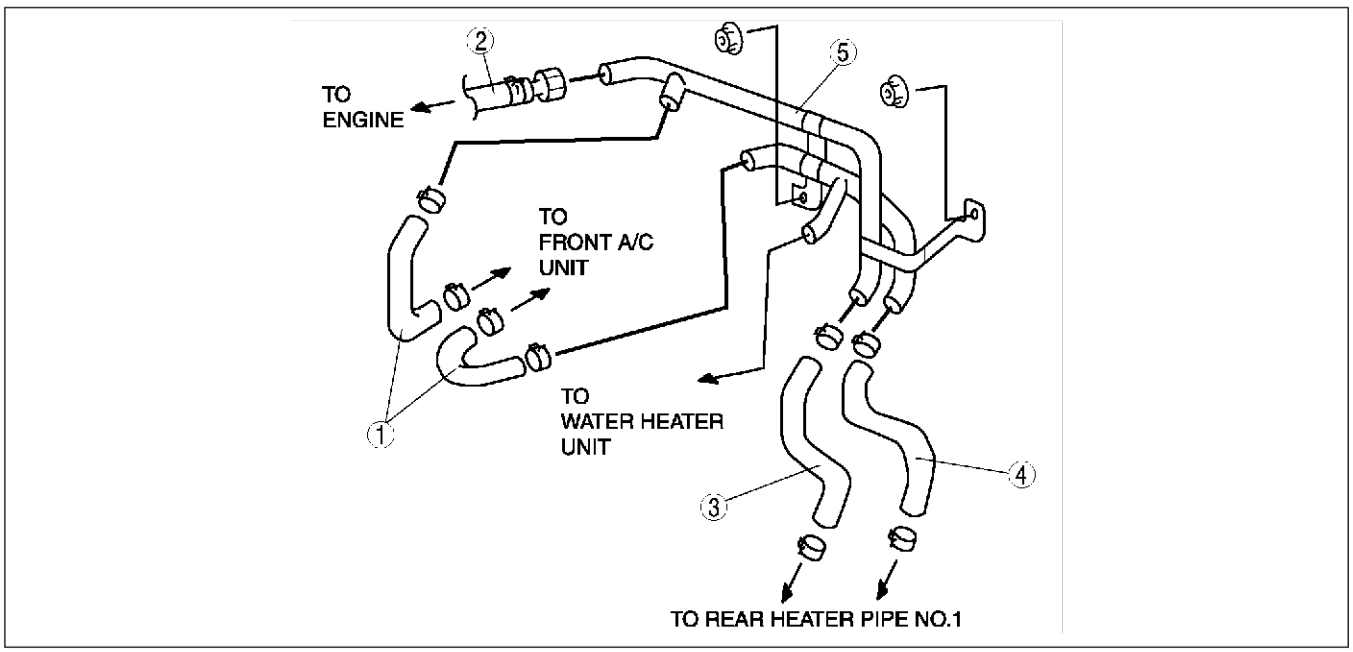

AME8516W101

1	Front heater hose No.1 (See U–9 Heater pipe and hose component installation note)
2	Front heater hose No.2 (See U–9 Heater pipe and hose component installation note)
3	Front heater hose No.3 (See U–9 Heater pipe and hose component installation note)
4	Front heater hose No.4 (See U–9 Heater pipe and hose component installation note)
5	Front heater pipe (See U–9 Heater pipe and hose component installation note)

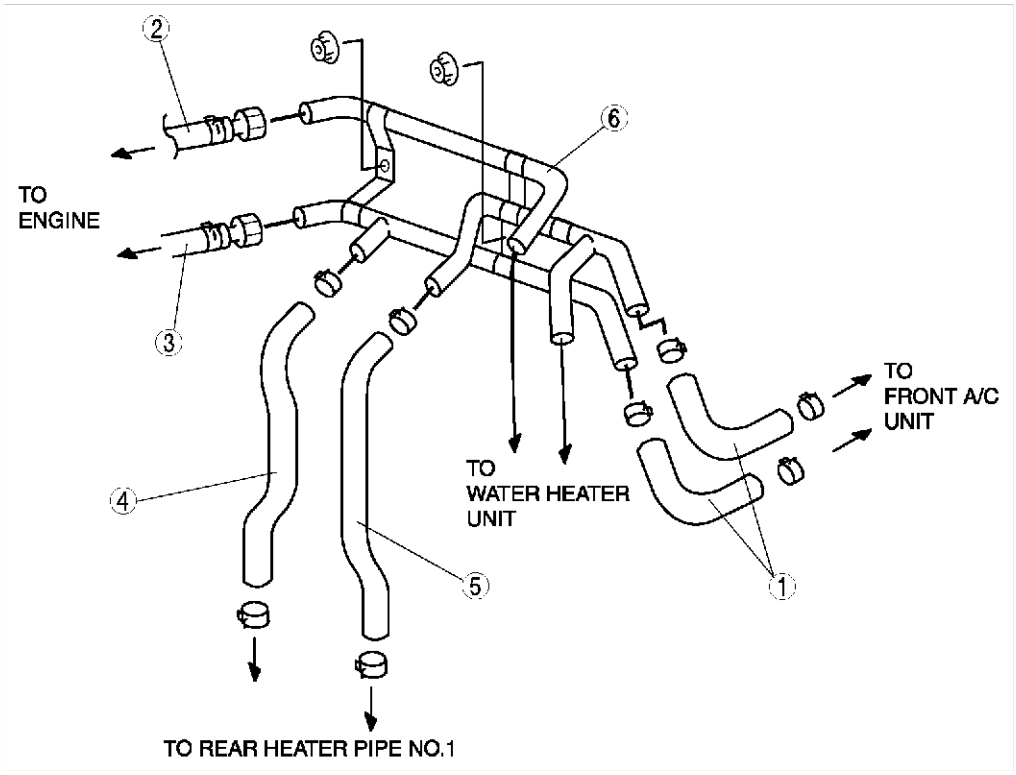

AME8516W102

1	Front heater hose No.1 (See U–9 Heater pipe and hose component installation note)
2	Front heater hose No.2 (See U–9 Heater pipe and hose component installation note)
3	Front heater hose No.3 (See U–9 Heater pipe and hose component installation note)
4	Front heater hose No.4 (See U–9 Heater pipe and hose component installation note)
5	Front heater hose No.5 (See U–9 Heater pipe and hose component installation note)
6	Front heater pipe (See U–9 Heater pipe and hose component installation note)

Heater pipe and hose component installation note

- Insert the heater pipe into the heater hose until the hose reaches the bracket or the protrusion on the pipe.

End Of Sta

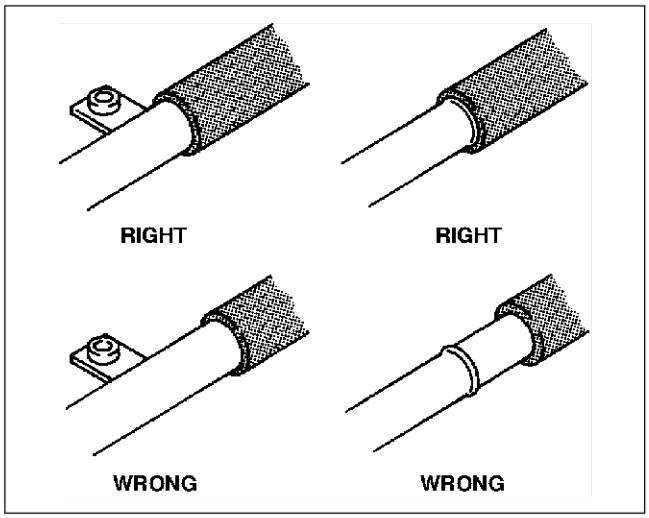

YMU711WAL

U

REFRIGERANT LINES REMOVAL/INSTALLATION

AME851661460W01

1. Disconnect the negative battery cable.
2. Discharge the refrigerant from the system.
3. Remove the following parts, depending on pipe and hose to be removed.

Cooler pipe/hose to be removed	Parts to be removed
Front cooler pipe No.1, No.2	• Radiator grille
Front cooler pipe No.3	• Engine — AJ: See B2–29 ENGINE REMOVAL/INSTALLATION — L3: See B3–46 ENGINE REMOVAL/INSTALLATION — MZR-CD (RF Turbo): See B4–33 ENGINE REMOVAL/INSTALLATION
Cooler hose (HI), (LO), Front cooler pipe No.4	• Splash shield

Caution

- **If moisture or foreign material enters the refrigeration cycle, cooling ability will be lowered and abnormal noise will occur. Always immediately plug all open fittings after removing any refrigeration cycle parts to keep moisture or foreign material out of the cycle.**
- **Do not allow A/C compressor oil to spill. Operating the A/C compressor without sufficient A/C compressor oil can lead to abnormal noise and cause the A/C compressor to seize up.**

4. Remove in the order indicated in the table.
5. Install in the reverse order of removal.
6. Perform the refrigerant system performance test.

FRONT

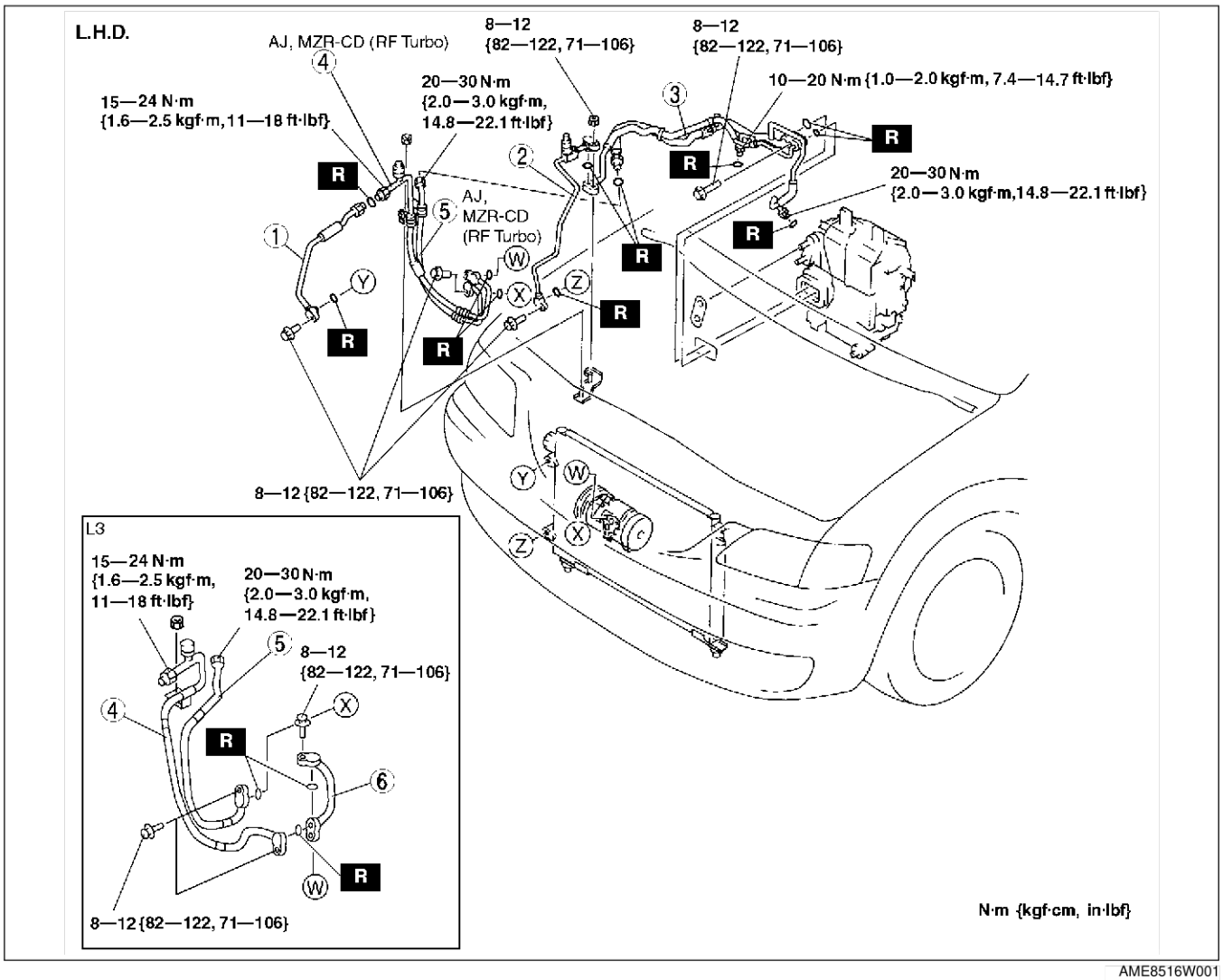

AME8516W001

1	Front cooler pipe No.1
2	Front cooler pipe No.2
3	Front cooler pipe No.3

4	Cooler hose (HI)
5	Cooler hose (LO)
6	Front cooler pipe No.4

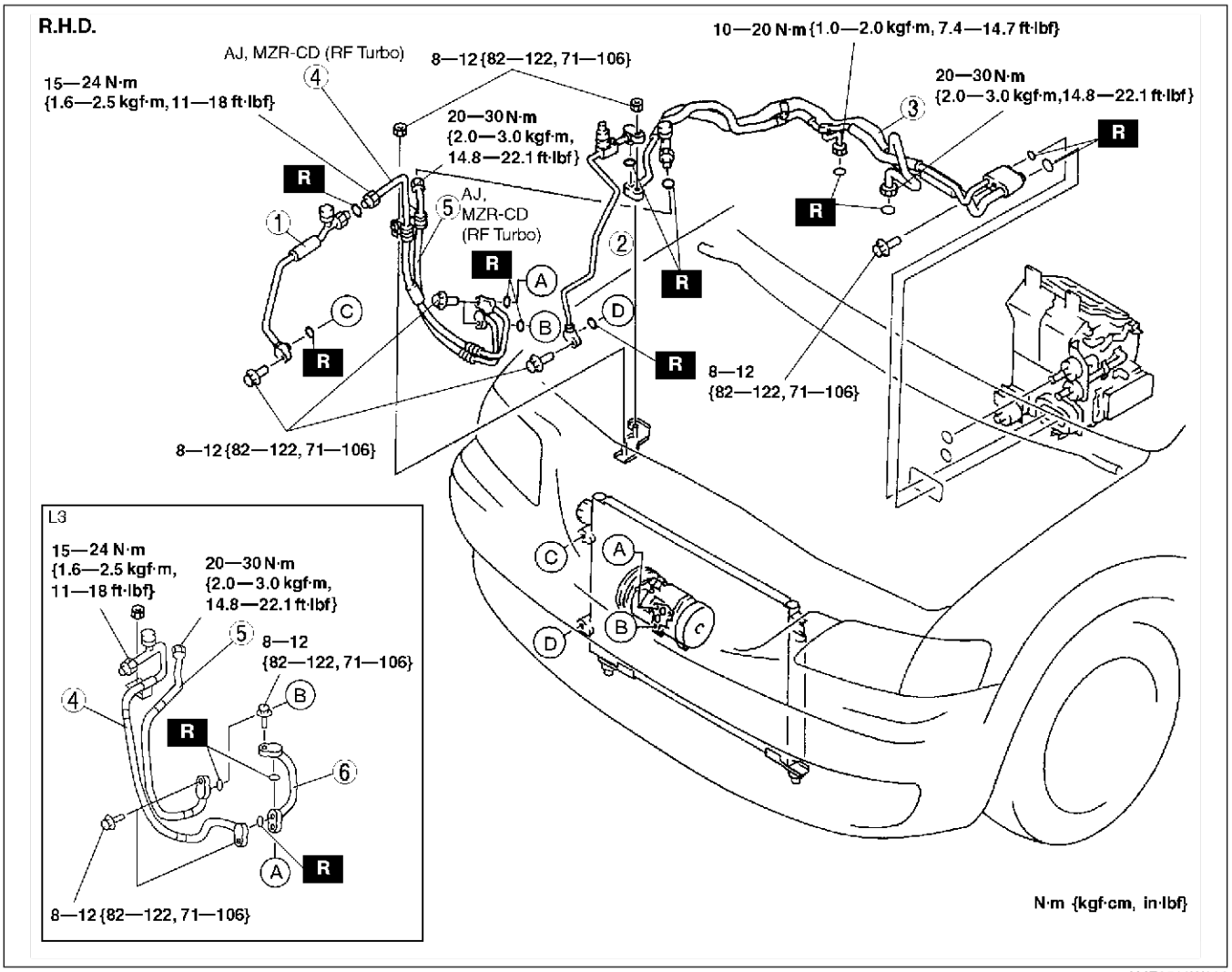

AME8516W002

1	Front cooler pipe No.1
2	Front cooler pipe No.2
3	Front cooler pipe No.3

4	Cooler hose (HI)
5	Cooler hose (LO)
6	Front cooler pipe No.4

End Of Sie

U

CONTROL SYSTEM

WATER HEATER UNIT REMOVAL/INSTALLATION

AME854000170W01

L.H.D.

1. Complete the “BEFORE REPAIR PROCEDURE”. (See F5–75 BEFORE REPAIR PROCEDURE.)
2. Disconnect the negative battery cable.
3. Drain the engine coolant.
4. To remove the exhaust pipe, remove the front stabilizer.
5. Remove in the order indicated in the table.
6. Install in the reverse order of removal.
7. Complete the “AFTER REPAIR PROCEDURE”. (See F5–75 AFTER REPAIR PROCEDURE.)
8. Refill the engine coolant.

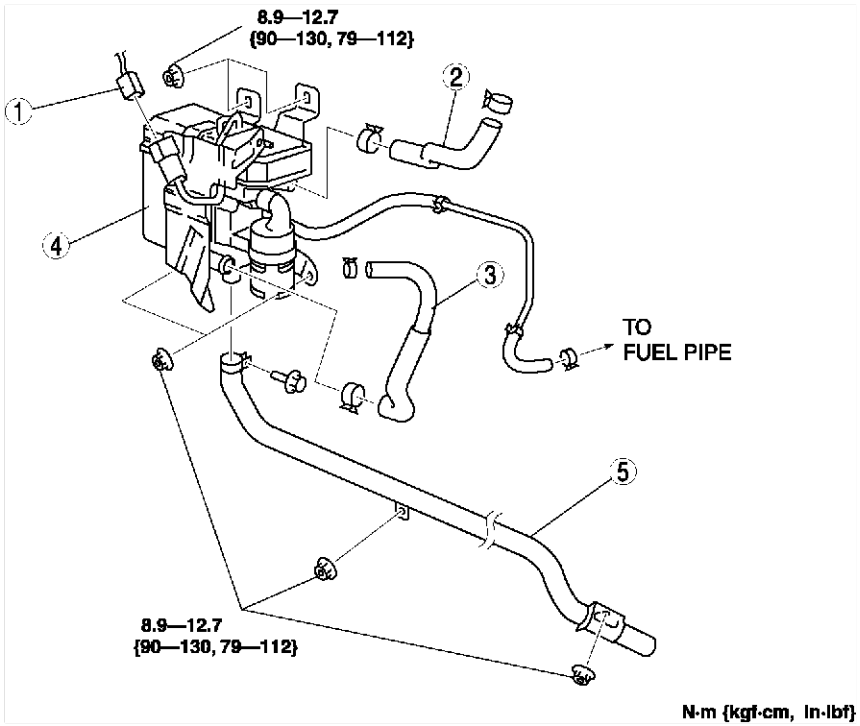

AME8540W104

1	Connector
2	Heater hose No.5
3	Heater hose No.4

4	Water heater unit
5	Exhaust pipe

R.H.D.

1. Complete the “BEFORE REPAIR PROCEDURE”. (See F5–75 BEFORE REPAIR PROCEDURE.)
2. Disconnect the negative battery cable.
3. Drain the engine coolant.
4. Remove the battery.
5. Remove the air cleaner.
6. Remove the fuel filter body with the pipes still connected, and fix the fuel filter body using a rope so that it is out of the way.
7. Remove in the order indicated in the table.
8. Install in the reverse order of removal.
9. Complete the “AFTER REPAIR PROCEDURE”. (See F5–75 AFTER REPAIR PROCEDURE.)
10. Refill the engine coolant.

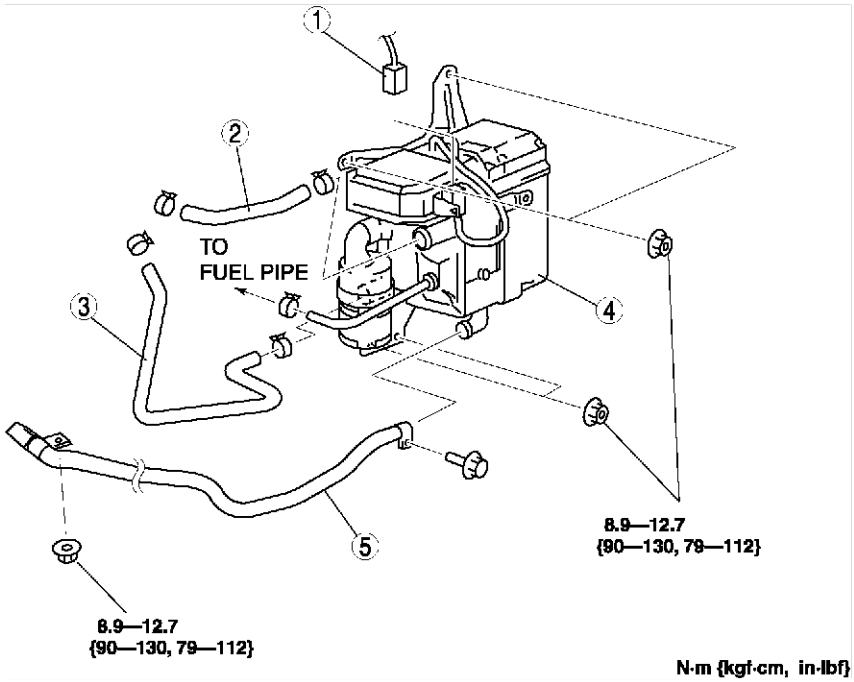

AME8540W105

1	Connector
2	Heater hose No.5
3	Heater hose No.4

4	Water heater unit
5	Exhaust pipe

End Of Ste

U

FUEL PUMP (WATER HEATER SYSTEM) REMOVAL/INSTALLATION

AME854013350W01

Warning

- **Fuel line spills and leakage are dangerous. Fuel can ignite and cause serious injuries or death and damage. Fuel can also irritate skin and eyes. To prevent this, do not damage the sealing surface of the fuel pump unit when removing or installing.**

1. Complete the “BEFORE REPAIR PROCEDURE”. (See F5–75 BEFORE REPAIR PROCEDURE.)
2. Disconnect the negative battery cable.
3. Remove in the order indicated in the table.

1	Connector
2	Fuel pump protector
3	Fuel pump (water heater system)

4. Install in the reverse order of removal.
5. Complete the “AFTER REPAIR PROCEDURE”. (See F5–75 AFTER REPAIR PROCEDURE.)

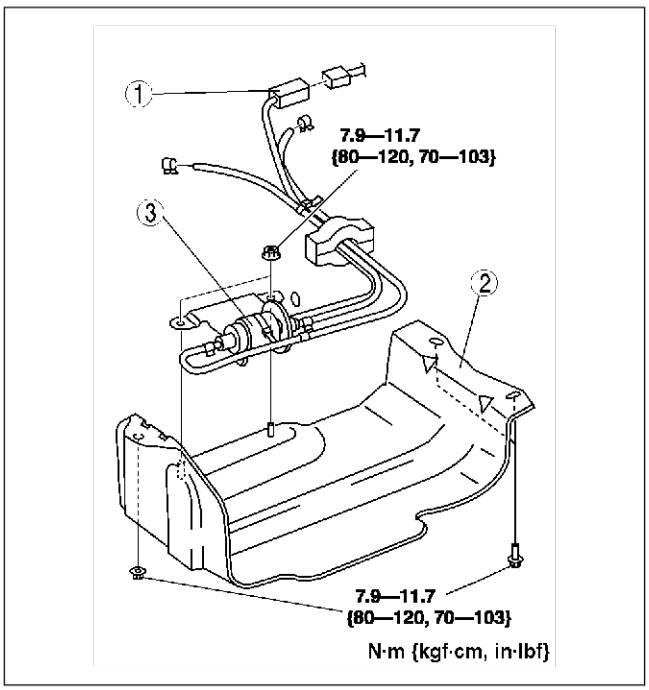

AME8540W006

End Of Sie

FUEL PUMP (WATER HEATER SYSTEM) INSPECTION

AME854013350W02

1. Inspect for continuity between the fuel pump terminals A and B using an ohmmeter.
   - If not as specified, replace the fuel pump (water heater system).

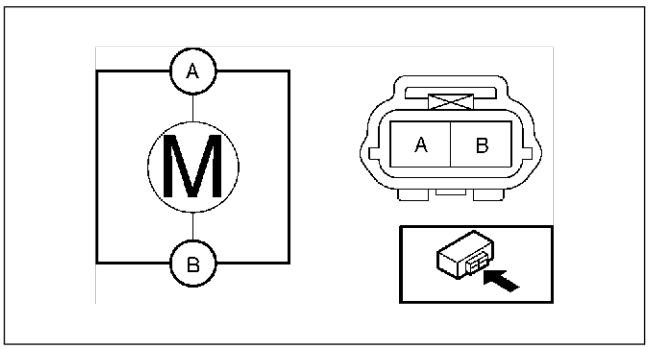

AME8540W007

End Of Sie

FRONT BLOWER MOTOR REMOVAL/INSTALLATION

AME854061140W01

1. Disconnect the negative battery cable.
2. Remove the under cover.
3. Remove in the order indicated in the table.

1	Connector
2	Front blower motor

4. Install in the reverse order of removal.

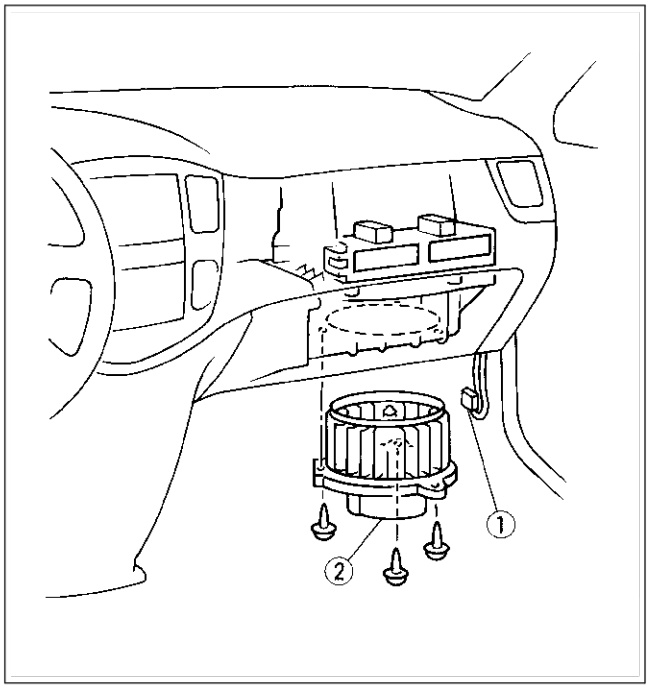

YMU740WA1

End Of Sto

MAGNETIC CLUTCH DISASSEMBLY/ASSEMBLY

AME854061010W01

1. Remove the A/C compressor. (See U–7 A/C COMPRESSOR REMOVAL/INSTALLATION.)
2. Disassemble in the order indicated in the table.

1	Pressure plate
2	Shim
3	Snap ring
4	A/C compressor pulley
5	Snap ring
6	Stator

3. Assemble in the reverse order of disassembly.
4. Adjust the magnetic clutch clearance.

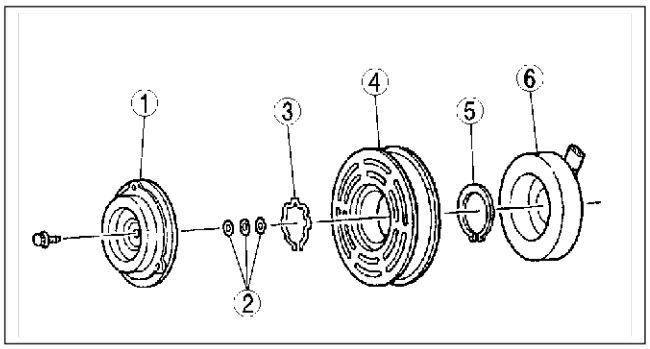

AMJ8540W017

End Of Sto

U

MAGNETIC CLUTCH INSPECTION

AME854061010W02

Operation

1. Disconnect the magnetic clutch connector.
2. Connect battery positive voltage to terminal A and ground to terminal B of the magnetic clutch.

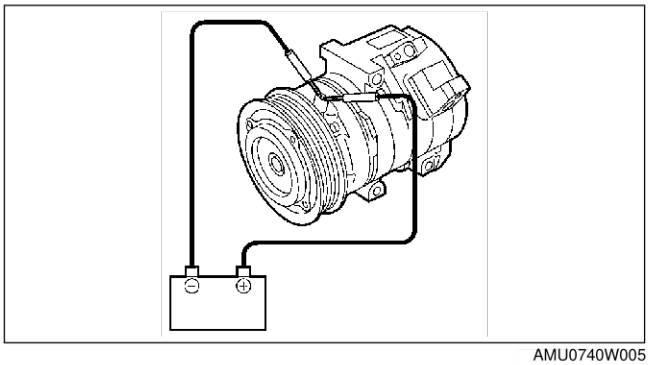

AMU0740W005

3. Verify that the magnetic clutch operates.
   - If not as specified, replace the stator.

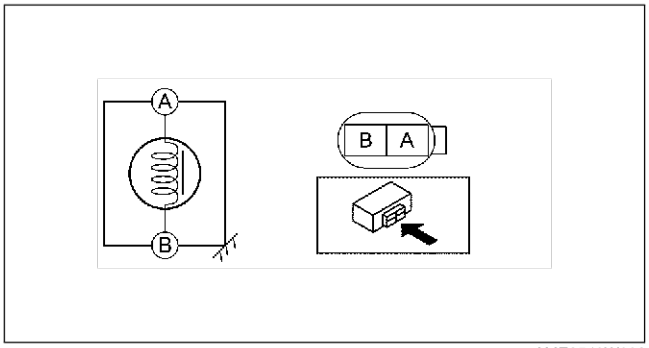

AME8540W003

Electric Current Value

Note

- If A/C 10 A fuse is often burnt out, the cause may be short circuit in the stator coil. Perform the following inspection.

1. Disconnect the magnetic clutch connector.
2. Connect battery positive voltage and an ammeter to terminal A and ground to terminal B of the magnetic clutch as shown.

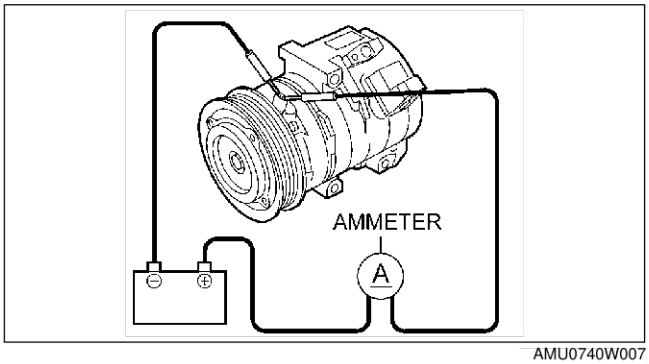

AMU0740W007

3. Verify the electric current value of the stator.
   - If not as specified, replace the stator.

Electric current value (Reference)
4.0 A or less

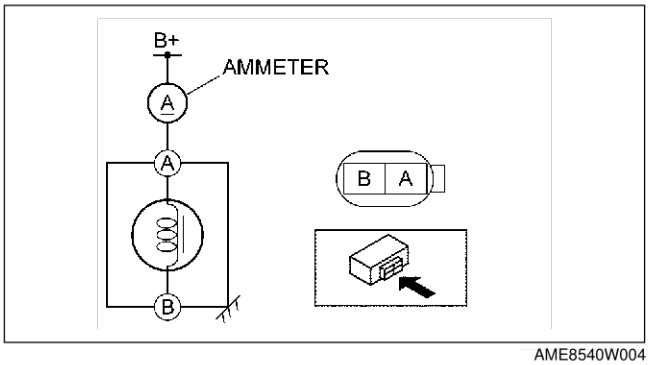

AME8540W004

End Of Sie

REFRIGERANT PRESSURE SWITCH INSPECTION

AME854061503W01

1. Install the gas charging set.
2. Disconnect the refrigerant pressure switch connector.
3. Verify the high-pressure side reading of the manifold gauge and continuity between the terminals are as shown.
   - If not as specified, replace the front cooler pipe No.2.

Type	High and low	Middle
Triple-pressure type	B—C	A—D
Dual-pressure type	A—B	—

Triple-pressure Type

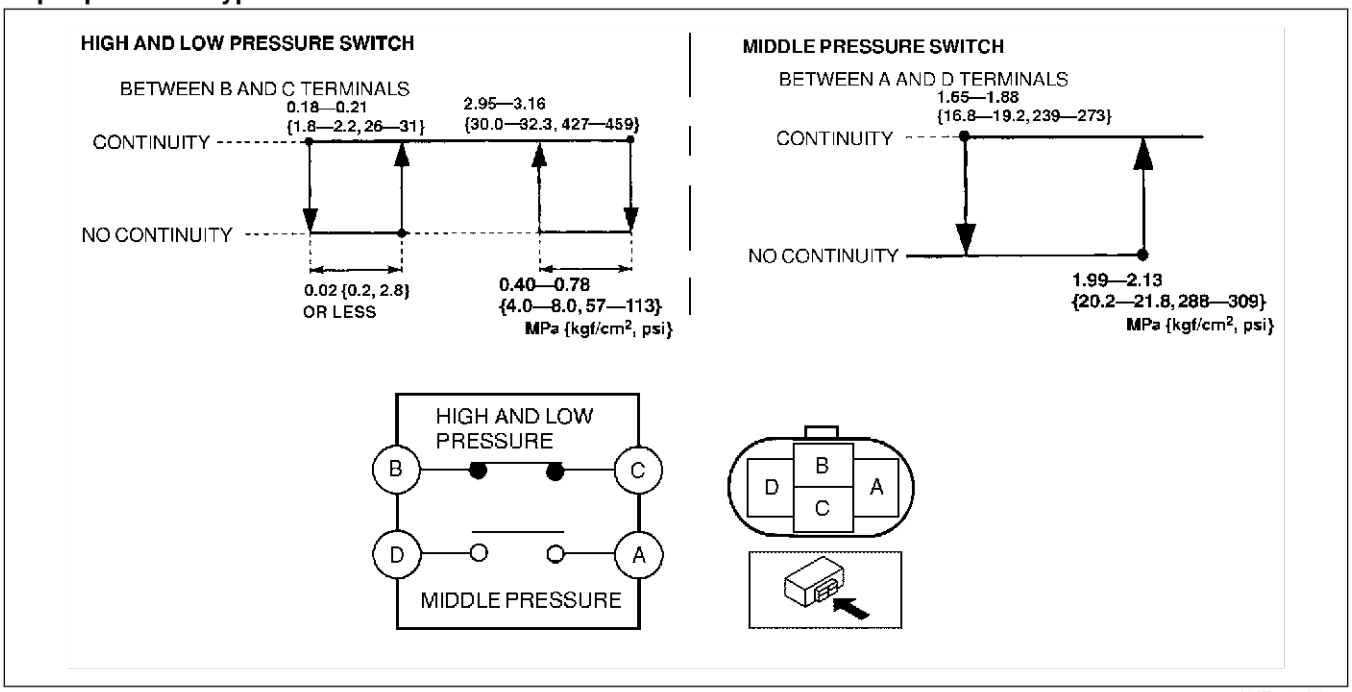

AME8540W106

Dual-pressure Type

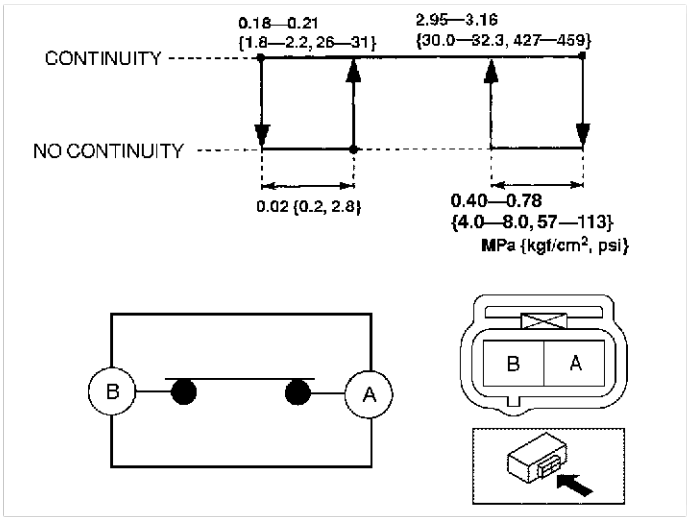

AME8540W107

End Of Sta

ON-BOARD DIAGNOSTIC

FOREWORD

AME857001038W01

Outline

- Diagnostic DTC can be read/cleared, using the **SST** (WDS or equivalent).

Read/clear diagnostic results

- This function allows you to read or clear DTCs in the water heater unit.

DTCs Reading Procedure

1. Perform the necessary vehicle preparation and visual inspection.
2. Connect **SST** (WDS or equivalent) to the vehicle DLC-2 16-pin connector located as shown in the figure.
3. Retrieve DTCs using WDS or equivalent.

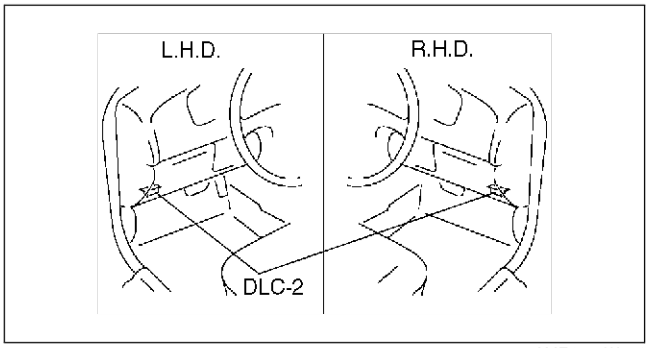

AME4270W001

Clearing DTCs Procedure

1. After repairs have been made, perform the **DTCs reading procedure**.
2. Erase DTCs using **SST** (WDS or equivalent).
3. Ensure that the customer's concern has been resolved.

PID/Data Monitor and Record Procedure

1. Connect **SST** (WDS or equivalent) to the vehicle DLC-2 16-pin connector located as shown in the figure.
2. Access and monitor PIDs by WDS or equivalent.

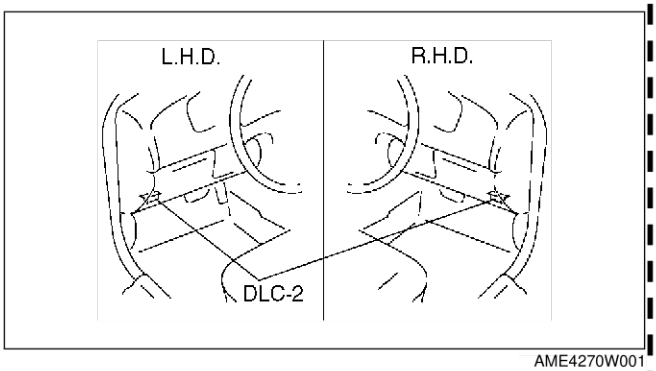

AME4270W001

End Of Sta

DTC TABLE

AME857001038W02

DTC	Possible cause	Page
B1317	Input voltage high	(See U–19 DTC B1317)
B1318	Input voltage low	(See U–19 DTC B1318)
B1342	Malfunction in water heater unit	(See U–20 DTC B1342, B2463, B2537, B2538, B2547, B2548)
B2449	Glow plug circuit short to ground	(See U–20 DTC B2449, B2450)
B2450	Glow plug circuit open	(See U–20 DTC B2449, B2450)
B2451	Fuel pump circuit short to ground	(See U–20 DTC B2451, B2452)
B2452	Fuel pump circuit open	(See U–20 DTC B2451, B2452)
B2453	Blower fan circuit short to ground	(See U–21 DTC B2453, B2454)
B2454	Blower fan circuit open	(See U–21 DTC B2453, B2454)
B2463	Overheat	(See U–20 DTC B1342, B2463, B2537, B2538, B2547, B2548)
B2537	Water heater system does not start	(See U–20 DTC B1342, B2463, B2537, B2538, B2547, B2548)

DTC	Possible cause	Page
B2538	Unstable flame	(See U–20 DTC B1342, B2463, B2537, B2538, B2547, B2548)
B2547	Flame prior to operation	(See U–20 DTC B1342, B2463, B2537, B2538, B2547, B2548)
B2548	Water heater lockout mode	(See U–20 DTC B1342, B2463, B2537, B2538, B2547, B2548)

* : If a DTC not listed above is detected, there is a water heater malfunction, and the water heater must be replaced.

PID/DATA MONITOR TABLE

AME857001038W09

PID Name (Definition)	Unit/ Condition	Condition/Specification (Reference)	Action	Water Heater Unit terminal
CCNTFFH (Number of continuous codes)	—	• DTC is detected: 1—255 • DTC is not detected: 0	Perform inspection using appropriate DTC.	—
ECT (Engine coolant temperature)	°C / °F	• ECT 20 °C {68 °F}: 20 °C {68 °F} • ECT 60 °C {140 °F}: 60 °C {140 °F}	—	—
VPWR_FFH (Module supply voltage)	V	• Ignition switch ON: B+	Inspect water heater unit power supply terminal.	A
VPWR_LMT (Low voltage threshold)	V	• Ignition switch ON: approx. 9.5 V	Inspect water heater unit power supply terminal.	A
FAN (Fan control)	%	• Blower fan is not operating: 0 % • Blower fan is operating: 0—100 %	—	—
GPD (Glow plug duty cycle)	%	• Water heater unit is not operating: 0 % • Water heater unit is operating: 0—100 %	—	—
BLOWRMTR (Blower motor)	On/Off	• Blower fan is not operating: Off • Blower fan is operating: On	—	—
FP (Fuel pump)	On/Off	• Water heater unit is not operating: Off • Water heater unit is operating: On	—	—
WATER_PMP (Water pump)	On/Off	• Water heater unit is not operating: Off • Water heater unit is operating: On	—	—
GLOW PLUG (Glow plugs)	On/Off	• Water heater unit is not operating: Off • Water heater unit is operating: On	—	—
COMB_FAN (Combustion air fan)	On/Off	• Water heater unit is not operating: Off • Water heater unit is operating: On	—	—
LOCKPUT (Heater lockout)	Lock/ Unlock	• Water heater unit is not operating: Lock • Water heater unit is operating: Unlock	—	—
FS (Flame sensor)	On/Off	• Water heater unit is not operating: Off • Water heater unit is operating: On	—	—
HEATER (Heater status)	Inactive/ Active	• Water heater unit is not operating: Inactive • Water heater unit is operating: Active	—	—
HEATER_SW (Heater activation switch)	Inactive/ Active	• Water heater unit is not operating: Inactive • Water heater unit is operating: Active	—	—

U

DTC B1317

AME857001038W03

DTC B1317	Input voltage high
DETECTION CONDITION	• Voltage detected at water heater unit terminals A is **more than 16 V**.
POSSIBLE CAUSE	• Short to power circuit between the generator and PCM • Generator malfunction • Battery malfunction

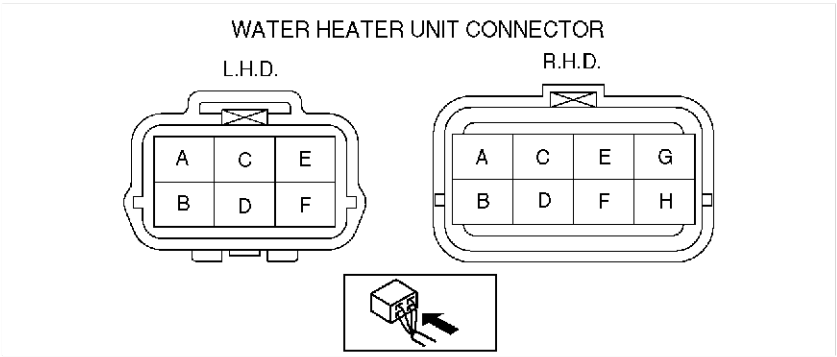

Diagnostic procedure

STEP	INSPECTION		ACTION
1	**INSPECT BATTERY VOLTAGE** • Measure battery boltage. • Is voltage **less than 16 V**?	Yes	Go to next step.
		No	Inspect charging system.
2	**INSPECT WATER HEATER UNIT** • Clear DTC. • Read DTCs using **SST** (WDS or equivalent). • Is DTC B1317 displayed again?	Yes	Replace water heater unit. (See U–12 WATER HEATER UNIT REMOVAL/ INSTALLATION)
		No	Troubleshooting completed.

End Of Sta

DTC B1318

AME857001038W04

DTC B1318	Input voltage low
DETECTION CONDITION	• Voltage detected at water heater unit terminals A is **less than 9 V**.
POSSIBLE CAUSE	• Generator malfunction • Battery malfunction

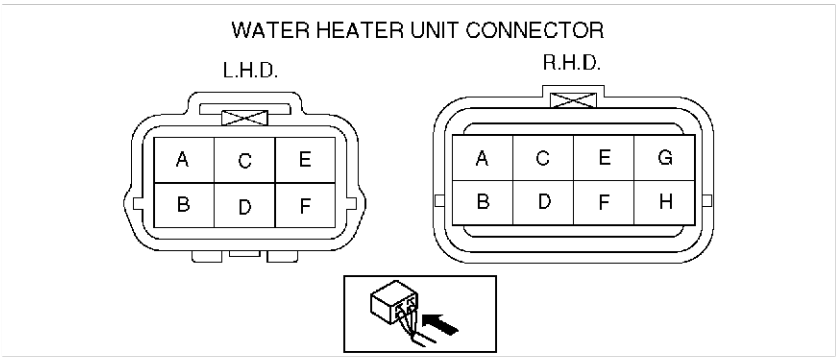

U

Diagnostic procedure

STEP	INSPECTION		ACTION
1	**INSPECT BATTERY VOLTAGE** • Measure battery boltage. • Is voltage **more than 9 V**?	Yes	Go to next step.
		No	Battery is weak. • Inspect charging system.
2	**INSPECT WIRING HARNESS BETWEEN W.HEAT 40 A FUSE AND WATER HEATER UNIT** • Turn ignition switch to ON position. • Measure voltage at water heater unit connector terminal A. • Is voltage **more than 9 V**?	Yes	Go to next step.
		No	Repair wiring harness.
3	**INSPECT WATER HEATER UNIT** • Clear DTC. • Read DTCs using **SST** (WDS or equivalent). • Is DTC B1318 displayed again?	Yes	Replace water heater unit. (See U–12 WATER HEATER UNIT REMOVAL/INSTALLATION)
		No	Troubleshooting completed.

End Of Sie

DTC B1342, B2463, B2537, B2538, B2547, B2548

AME857001038W05

DTC	**B1342**	**Malfunction in water heater unit**
	B2463	**Overheat**
	B2537	**Water heater system does not start**
	B2538	**Unstable flame**
	B2547	**Flame prior to operation**
	B2548	**Water heater lockout mode**
DETECTION CONDITION		• CPU detects malfunction in water heater unit
POSSIBLE CAUSE		• Water heater unit malfunction — CPU malfunction — Glow plug malfunction — Flame detection sensor malfunction

Diagnostic procedure

ACTION
• Replace water heater unit. (See U–12 WATER HEATER UNIT REMOVAL/INSTALLATION)

End Of Sie

DTC B2449, B2450

AME857001038W06

DTC	**B2449**	**Glow plug circuit short to ground**
	B2450	**Glow plug circuit open**
DETECTION CONDITION		• CPU detects malfunction in glow plug circuit
POSSIBLE CAUSE		• Water heater unit malfunction

Diagnostic procedure

ACTION
• Replace water heater unit. (See U–12 WATER HEATER UNIT REMOVAL/INSTALLATION)

End Of Sie

DTC B2451, B2452

AME857001038W07

DTC	**B2451**	**Fuel pump (water heater system) circuit short to ground**
	B2452	**Fuel pump (water heater system) circuit open**
DETECTION CONDITION		• CPU detects malfunction in fuel pump (water heater system) circuit
POSSIBLE CAUSE		• Fuel pump (water heater system) malfunction • Water heater unit malfunction • Short to ground between water heater unit terminal B and fuel pump (water heater system) terminal A • Open circuit between water heater unit terminal B and fuel pump (water heater system) terminal A • Open circuit between fuel pump (water heater system) terminal B and GND

DTC	B2451	Fuel pump (water heater system) circuit short to ground
	B2452	Fuel pump (water heater system) circuit open

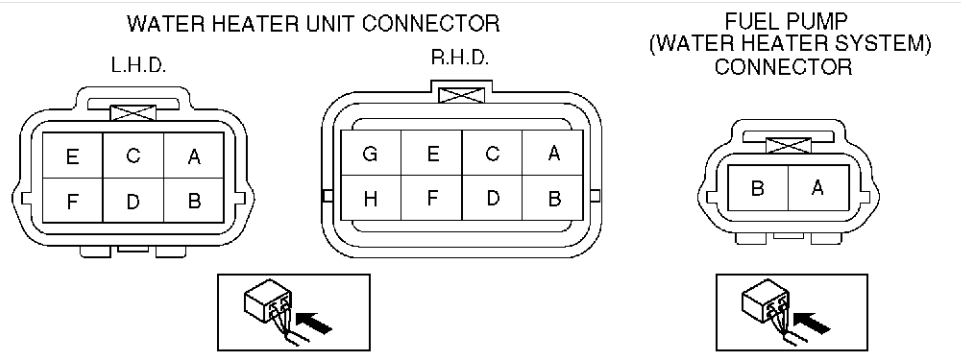

Diagnostic procedure

STEP	INSPECTION		ACTION
1	**INSPECT WIRING HARNESS BETWEEN WATER HEATER UNIT AND FUEL PUMP (WATER HEATER SYSTEM) FOR CONTINUITY** • Start engine. • Is voltage at fuel pump (water heater system) connector terminal A **approximately 12 V**?	Yes	Go to next step
		No	Repair wiring harness.
2	**INSPECT FUEL PUMP (WATER HEATER SYSTEM)** • Inspect fuel pump (water heater system). (See U–14 FUEL PUMP (WATER HEATER SYSTEM) INSPECTION) • Is fuel pump (water heater system) okay?	Yes	Go to next step
		No	Replace fuel pump (water heater system). (See U–14 FUEL PUMP (WATER HEATER SYSTEM) REMOVAL/INSTALLATION)
3	**INSPECT WIRING HARNESS BETWEEN FUEL PUMP (WATER HEATER SYSTEM) AND GROUND FOR CONTINUITY** • Is there continuity fuel pump (water heater system) connector terminal B and ground?	Yes	Go to next step
		No	Repair wiring harness.
4	**INSPECT WATER HEATER UNIT** • Clear DTC. • Read DTCs using **SST** (WDS or equivalent). • Is DTC B2451 or B2452 displayed again?	Yes	Replace water heater unit. (See U–12 WATER HEATER UNIT REMOVAL/INSTALLATION)
		No	Troubleshooting completed.

End Of Sie

DTC B2453, B2454

AME857001038W08

DTC	B2453	Blower fan circuit short to ground
	B2454	Blower fan circuit open
DETECTION CONDITION		• CPU detects Malfunction in blower fan circuit
POSSIBLE CAUSE		• Water heater unit malfunction

Diagnostic procedure

ACTION
• Replace water heater unit. (See U–12 WATER HEATER UNIT REMOVAL/INSTALLATION)

End Of Sie

U

TROUBLESHOOTING

FOREWORD

AME858001038W01

- The areas for inspection (steps) are given according to various circuit malfunctions. Use the chart below to verify the symptoms of the trouble in order to diagnose the appropriate area.

End Of Sie

TROUBLESHOOTING INDEX

AME858001038W02

No.	TROUBLESHOOTING ITEM	DESCRIPTION	PAGE
1	Air from vent not cold enough	• Magnetic clutch operates but A/C system malfunctions.	(See U–22 NO.1 AIR FROM VENT NOT COLD ENOUGH)
2	No cool air	• Magnetic clutch does not operate.	(See U–25 NO.2 NO COOL AIR)
3	Noise while operating A/C system	• Noise from magnetic clutch, A/C compressor, hose or refrigerant line.	(See U–28 NO.3 NOISE WHILE OPERATING A/C SYSTEM)

End Of Sie

NO.1 AIR FROM VENT NOT COLD ENOUGH

AME858001038W03

1	Air from vent not cold enough
DESCRIPTION	• Magnetic clutch operates but A/C system malfunctions.
POSSIBLE CAUSE	• Drive belt malfunction (Step 1) • Malfunction in blower unit, rear A/C unit and/or condenser (Steps 4, 5) • Malfunction in RECEIVER/DRIER or expansion valve (valve closes too much) (Step 8) • Malfunction in refrigerant lines (Steps 9, 10) • Malfunction in piping connections (Steps 1, 2, 12) • A/C compressor system malfunction, insufficient compressor oil (Steps 14, 15) • Compressor oil over-full, malfunction in expansion valve or front and/or rear A/C unit air mix link system (Steps 16—18)

Diagnostic procedure

STEP	INSPECTION		ACTION
1	**INSPECT DRIVE BELT** • Inspect drive belt. — AJ: — L3: (See B3–25 DRIVE BELT INSPECTION) — MZR-CD (RF Turbo): (See B4–12 DRIVE BELT INSPECTION) • Is it okay?	Yes	Go to next step.
		No	Replace drive belt, then go to Step 19.
2	**INSPECT REFRIGERANT SYSTEM PERFORMANCE** • Carry out refrigerant system performance test. • Is operation normal?	Yes	Operation is normal. (Recheck malfunction symptoms.)
		No	Go to next step.
3	**VERIFY WHETHER MALFUNCTION IS IN A/C UNIT INTAKE AND CONDENSER OR ELSEWHERE** • Are refrigerant's high-pressure and low-pressure values both high?	Yes	Go to next step.
		No	Go to Step 6.
4	**INSPECT FRONT AND/OR REAR A/C UNIT INTAKE** • Are front and/or rear A/C unit intake clogged?	Yes	Remove obstruction, then go to Step 19. (If air does not reach evaporator within front and/or rear A/C unit, heat exchange does not occur and refrigerant pressure rises. Therefore, removal of obstruction is necessary.)
		No	Go to next step.
5	**INSPECT CONDENSER** • Inspect condenser. • Is it okay?	Yes	Add or subtract refrigerant to make specified amount, then go to Step 19. (Excessive amount of refrigerant.)
		No	Replace condenser, or repair and clean condenser fins, then go to Step 19.

STEP	INSPECTION		ACTION
6	**VERIFY WHETHER MALFUNCTION IS IN EXPANSION VALVE, RECEIVER/DRIER AND REFRIGERANT LINES OR ELSEWHERE** • Are refrigerant's high-pressure and low-pressure values low?	Yes	Go to next step.
		No	Go to Step 13.
7	**VERIFY WHETHER MALFUNCTION IS IN EXPANSION VALVE AND RECEIVER/DRIER OR ELSEWHERE** • Immediately after A/C compressor operates, does refrigerant's high-pressure value momentarily rise to correct value, then fall and stay below it? (Is there negative pressure on low-pressure side?)	Yes	Go to next step.
		No	Go to Step 9.
8	**VERIFY WHETHER MALFUNCTION IS IN EXPANSION VALVE OR RECEIVER/DRIER** • Turn A/C switch off and let air conditioner stop for **10 minutes**. • Start engine. • Turn both A/C switch and front fan switch on. • Does malfunction occur after A/C compressor turns on?	Yes	Replace expansion valve, then go to Step 19. (Since valve closes too much, replacement is necessary.)
		No	Start vacuum pump for **30 minutes** and replace condenser, then go to Step 19. (Since RECEIVER/DRIER has become saturated with water, replacement is necessary.)
9	**INSPECT REFRIGERANT LINES** • Inspect refrigerant lines as follows. — Is piping free of damage and cracks? — Are piping connections free of oil grime? (Visual inspection) — Are piping connections free of gas leakage? — Are piping installation points on condenser free of gas leakage? — Are piping installation points on A/C compressor free of gas leakage? — Are piping installation points on rear A/C unit free of gas leakage? — Perform gas leak inspection using gas leak tester. • Are above items okay?	Yes	Go to next step.
		No	If piping or an A/C component is damaged or cracked, replace it. Then go to Step 19. If there is no damage, go to Step 12.
10	**INSPECT EVAPORATOR PIPING CONNECTIONS IN A/C UNIT FOR GAS LEAKAGE** • Are piping connections for front and/or rear evaporator in rear A/C unit free of gas leakage?	Yes	If the A/C compressor is making noise, add **10 ml {10 cc, 0.338 fl oz}** of compressor oil and verify that malfunction does not occur. Add or subtract refrigerant to make specified amount, then go to Step 19.
		No	If piping is damaged or cracked, replace it. Then go to Step 19. If there is no damage, go to next step.
11	**INSPECT EVAPORATOR PIPING CONNECTIONS IN A/C UNIT FOR LOOSE** • Are piping connections for front and/or rear evaporator in rear A/C unit loose?	Yes	Tighten connections to specified torque. If the A/C compressor is making noise, add **10 ml {10 cc, 0.338 fl oz}** of compressor oil and verify that malfunction does not occur. Add or subtract refrigerant to make specified amount, then go to Step 19.
		No	If the A/C compressor is making noise, add **10 ml {10 cc, 0.338 fl oz}** of compressor oil and verify that malfunction does not occur. Replace O-ring on piping, add or subtract refrigerant to make specified amount, then go to Step 19.
12	**INSPECT PIPING CONNECTIONS FOR LOOSE** • Are piping connections loose?	Yes	Tighten connections to specified torque. If the A/C compressor is making noise, add **10 ml {10 cc, 0.338 fl oz}** of compressor oil and verify that malfunction does not occur. Add or subtract refrigerant to make specified amount, then go to Step 19.
		No	If the A/C compressor is making noise, add **10 ml {10 cc, 0.338 fl oz}** of compressor oil and verify that malfunction does not occur. Replace O-ring on piping, add or subtract refrigerant to make specified amount, then go to Step 19.

STEP	INSPECTION		ACTION
13	**VERIFY WHETHER MALFUNCTION IS IN EXPANSION VALVE, AIR MIX ACTUATOR AND COMPRESSOR OIL OR ELSEWHERE** • Does refrigerant's high-pressure value hardly increase?	Yes	Go to next step. (Pressure hardly increases.)
		No	Go to Step 16.
14	**VERIFY WHETHER MALFUNCTION IS IN COMPRESSOR OIL AMOUNT AND A/C COMPRESSOR OR ELSEWHERE** • When engine is racing, does high-pressure value increase?	Yes	Return to Step 3.
		No	Go to next step.
15	**VERIFY WHETHER MALFUNCTION IS IN COMPRESSOR OIL AMOUNT OR A/C COMPRESSOR** • After compressor oil is replenished each **10 ml {10 cc, 0.338 fl oz}**, does high-pressure value increase?	Yes	Troubleshooting completed. (Explain to customer that cause was insufficient compressor oil.)
		No	Replace A/C compressor, then go to Step 19. (Cause is defective A/C compressor.)
16	**VERIFY WHETHER MALFUNCTION IS IN EXPANSION VALVE OR ELSEWHERE** • Is only refrigerant low-pressure value high?	Yes	Replace expansion valve, then go to Step 19. (Since valve opens too much, replacement is necessary.)
		No	Go to next step.
17	**VERIFY THAT AIR MIX ACTUATOR IS INSTALLED SECURELY AND PROPERLY** • Are front and/or rear A/C unit's air mix link, crank, and shaft securely and properly installed?	Yes	Go to next step.
		No	Repair or install link, crank, and shaft securely in proper position, then go to Step 19.
18	**ADJUST COMPRESSOR OIL** • Set the front fan switch at 4th position. • Turn the A/C switch on. • Set in FRESH mode. • Set the temperature control to MAX COLD. • Set in VENT mode. • Run engine at a constant **1,500 rpm** for **10 minutes**. • Run engine at idle speed for **1 minute**. • 1 engine speed cycle is defined as going from idle speed to **4,000 rpm** and back to idle speed over a period of **12 seconds**. Perform **5 cycles**. • Run engine at idle speed for **30 seconds**. • Remove all compressor oil from A/C compressor and verify that it is **100 ml {100 cc, 3.38 fl oz}**. • If it is more than **100 ml {100 cc, 3.38 fl oz}**, put only **100 ml {100 cc, 3.38 fl oz}** back into A/C compressor. • Carry out above Steps 1 to 10 again and verify that compressor oil is **100 ml {100 cc, 3.38 fl oz}**. • Is there **100 ml {100 cc, 3.38 fl oz}** of compressor oil in A/C compressor?	Yes	Go to next step.
		No	Follow Steps 1 to 10 again until compressor oil is **100 ml {100 cc, 3.38 fl oz}**.
19	**VERIFY THAT MALFUNCTION SYMPTOM OCCURS AFTER REPAIR** • Does cool air blow out? (Are results of refrigerant system performance test okay?)	Yes	Troubleshooting completed. Explain repairs to customer.
		No	Recheck malfunction symptoms, then repeat from Step 1 if malfunction recurs.

End Of Ste

NO.2 NO COOL AIR

AME858001038W04

2	No cool air
DESCRIPTION	• Magnetic clutch does not operate.
POSSIBLE CAUSE	• A/C compressor system malfunction (Step 2) • Incorrect amount of refrigerant (Step 3) • A/C switch indicator light malfunction (Steps 4—7) • PCM A/C cut-off control system (Step 8) • PCM (IG1 signal) system malfunction (Steps 9—22) • Thermosensor, A/C switch malfunction (Steps 10—15) • PCM (A/C signal) system malfunction (Steps 16, 17) • Refrigerant pressure switch malfunction (Step 18) • PCM cooling fan control system (Step 23) • A/C relay, magnetic clutch malfunction (Steps 9, 24—27)

- When performing an asterisked (*) troubleshooting inspection, shake the wiring harness and connectors while doing the inspection to discover whether poor contact points are the cause of any intermittent malfunctions. If there is a problem, check to make sure connectors, terminals and wiring harnesses are connected correctly and undamaged.

Diagnostic procedure

STEP	INSPECTION		ACTION
1	**INSPECT AIR BLOW OUT** • Does air blow out?	Yes	Go to next step.
		No	Go to Step 1 of troubleshooting indexes No.1, 2, 6, and 7.
2	**INSPECT A/C COMPRESOR OPERATION** • Start engine. • Turn both A/C switch and front fan switch on. • Does A/C compressor operate?	Yes	Go to Step 1 of troubleshooting index No.10.
		No	Go to next step.
3	**INSPECT REFRIGERANT AMOUNT** • Inspect refrigerant amount. • Is it okay?	Yes	Go to next step.
		No	Add or subtract refrigerant to specified level, then go to Step 28.
4	**INSPECT A/C SWITCH INDICATOR LIGHT** • Does A/C switch indicator light illuminate?	Yes	Go to Step 8.
		No	Go to next step.
*5	**INSPECT WIRING HARNESS BETWEEN FUSE BLOCK AND FRONT CLIMATE CONTROL UNIT FOR CONTINUITY** • Turn ignition switch to ON position. • Turn both A/C switch and front fan switch on. • Remove airflow mode wire, and air mix wire and pull out front climate control unit. • Test voltage at front climate control unit terminal B (IG2 signal). • Is voltage **approximately B+**?	Yes	Go to next step.
		No	Repair wiring harness between fuse block and front climate control unit, then go to Step 28.
*6	**INSPECT WIRING HARNESS BETWEEN FRONT CLIMARE CONTROL UNIT AND RESISTOR FOR CONTINUITY** • Turn ignition switch to ON position. • Turn front fan switch off. • Test voltage at front climate control unit connector terminal F (blower fan signal). • Is voltage **approximately B+**?	Yes	Go to next step.
		No	Inspect wiring harness between front climate control unit and resistor, then go to Step 28.
*7	**VERIFY WHETHER MALFUNCTION IS IN WIRING HARNESS (BETWEEN FRONT CLIMATE CONTROL UNIT AND GROUND FOR CONTINUITY) OR FRONT CLIMATE CONTROL UNIT** • Turn ignition switch to LOCK position. • Is there continuity between front climate control unit connector terminal D (GND signal) and ground?	Yes	Replace front climate control unit, then go to Step 28.
		No	Repair wiring harness between front climate control unit and ground, then go to Step 28.
8	**CHECK FOR DTCS IN PCM** • Check the DTC for the ON-BOARD DIAGNOSTIC (ENGINE CONTROL). • Are any DTCs displayed?	Yes	Go to appropriate inspection procedure. (The PCM's A/C cut off control input signal may be the cause of the trouble.)
		No	Go to next step.

STEP	INSPECTION		ACTION
*9	**VERIFY WHETHER MALFUNCTION IS IN MAGNETIC CLUTCH SYSTEM OR ELSEWHERE** • Remove A/C relay. • Turn ignition switch to ON position. • When A/C relay connector terminal C and D (on wiring harness side) are shorted, does magnetic clutch operate?	Yes	Go to next step.
		No	Go to Step 24.
*10	**VERIFY WHETHER MALFUNCTION IS IN THERMOSENSOR SYSTEM OR ELSEWHERE** • Turn ignition switch to LOCK position. • Disconnect refrigerant pressure switch connector. • Turn ignition switch to ON position. • Set front fan switch at first speed. • Test voltage at the following refrigerant pressure switch connector terminals (A/C signal) on wiring harness side. — Terminal C • Is voltage **approximately B+** when A/C switch is off and **0 V** when it is on?	Yes	Go to Step 16.
		No	Reconnect refrigerant pressure switch connector, then go to next step.
*11	**VERIFY WHETHER MALFUNCTION IS IN THERMOSENSOR AND WIRING HARNESS (BETWEEN FUSE BLOCK AND THERMOSENSOR FOR CONTINUITY) OR ELSEWHERE** • Disconnect thermosensor connector. • Start engine. • Turn both A/C switch and front fan switch on. • When thermosensor connector terminals B and C (on wiring harness side) are shorted, does cool air blow out?	Yes	Undo short, then go to next step.
		No	Undo short, then go to Step 13.
*12	**VERIFY WHETHER MALFUNCTION IS IN THERMOSENSOR OR WIRING HARNESS (BETWEEN FUSE BLOCK AND THERMOSENSOR FOR CONTINUITY)** • Turn ignition switch to ON position. • Test voltage at thermosensor connector terminal A (IG2 signal) on wiring harness side. • Is voltage **approximately B+**?	Yes	Inspect thermosensor, then go to Step 28.
		No	Repair wiring harness between fuse block and thermosensor, then go to Step 28.
*13	**INSPECT WIRING HARNESS BETWEEN THERMOSENSOR AND REFRIGERANT PRESSURE SWITCH FOR SHORT TO B+** • Turn ignition switch to ON position. • Test voltage at thermosensor connector terminal C (A/C signal) on wiring harness side. • Is voltage **approximately B+**?	Yes	Repair wiring harness between thermosensor and refrigerant pressure switch, then go to Step 28.
		No	Go to next step.
*14	**INSPECT WIRING HARNESS BETWEEN THERMOSENSOR AND REFRIGERANT PRESSURE SWITCH FOR CONTINUITY** • Turn ignition switch to LOCK position. • Inspect for continuity between the following thermosensor connector terminals (A/C signal) and refrigerant pressure switch connector terminals. — Terminal C—Terminal C • Is there continuity?	Yes	Go to next step.
		No	Repair wiring harness between refrigerant pressure switch and thermosensor, then go to Step 28.
*15	**INSPECT WIRING HARNESS BETWEEN FRONT CLIMATE CONTROL UNIT AND THERMOSENSOR FOR CONTINUITY** • Is there continuity between front climate control unit connector terminal I and thermosensor connector terminal B.	Yes	Replace front climate control unit.
		No	Repair wiring harness between front climate control unit and thermosensor.

STEP	INSPECTION		ACTION
*16	**VERIFY WHETHER MALFUNCTION IS IN PCM AND WIRING HARNESS (BETWEEN PCM AND REFRIGERANT PRESSURE SWITCH FOR CONTINUITY) OR ELSEWHERE** • Turn ignition switch to ON position. • Test voltage at the following refrigerant pressure switch connector (on wiring harness side) terminal (A/C signal). — Terminal A • Is voltage **approximately B+**?	Yes	Go to Step 18.
		No	Go to next step.
*17	**VERIFY WHETHER MALFUNCTION IS IN PCM OR WIRING HARNESS (BETWEEN PCM AND REFRIGERANT PRESSURE SWITCH FOR CONTINUITY)** • Test voltage at PCM connector terminal 41 (A/C signal). • Is voltage **approximately B+**?	Yes	Repair wiring harness between PCM and refrigerant pressure switch, then go to Step 28.
		No	Inspect PCM, then go to Step 28.
*18	**VERIFY WHETHER MALFUNCTION IS IN REFRIGERANT PRESSURE SWITCH OR ELSEWHERE** • When the following refrigerant pressure switch connector terminals (on wiring harness side) are shorted, does cool air blow out? — Terminal A—Terminal C	Yes	Inspect refrigerant pressure switch, then go to Step 28.
		No	Undo short, reconnect refrigerant pressure switch connector, then go to next step.
*19	**VERIFY WHETHER MALFUNCTION IS IN A/C RELAY SYSTEM (COIL-SIDE) OR ELSEWHERE** • Turn ignition switch to ON position. • Turn A/C switch off. • Test voltage at PCM connector terminal 69 (IG1 signal). • Is voltage **approximately B+**?	Yes	Go to Step 23.
		No	Go to next step.
*20	**INSPECT A/C RELAY (COIL-SIDE) POWER SUPPLY FUSE** • Is A/C relay power supply fuse okay?	Yes	Go to next step.
		No	Inspect blown fuse's circuit for short to ground. Repair or replace as necessary. Install appropriate amperage fuse.
*21	**INSPECT WIRING HARNESS BETWEEN FUSE BLOCK AND A/C RELAY (COIL-SIDE) FOR CONTINUITY** • Turn ignition switch to ON position. • Test voltage at A/C relay connector terminal A (IG2 signal). • Is voltage **approximately B+**?	Yes	Go to next step.
		No	Repair wiring harness between fuse block and A/C relay, then go to Step 28.
*22	**INSPECT A/C RELAY (COIL-SIDE)** • Inspect A/C relay. • Is it okay?	Yes	Repair wiring harness between A/C relay and PCM (terminal 69), then go to Step 28.
		No	Replace A/C relay, then go to Step 28.
*23	**INSPECT COOLANT SYSTEM OPERATION** • Inspect cooling system operation. (See E–22 FAN CONTROL MODULE INSPECTION)	Yes	Go to next step.
		No	Go to appropriate inspection procedure.
24	**INSPECT A/C RELAY (SWITCH-SIDE) POWER SUPPLY FUSE** • Is A/C relay power supply fuse okay?	Yes	Go to next step.
		No	Inspect blown fuse's circuit for short to ground. Repair or replace as necessary. Install appropriate amperage fuse.
*25	**INSPECT WIRING HARNESS BETWEEN FUSE BLOCK AND A/C RELAY (SWITCH-SIDE) FOR CONTINUITY** • Turn ignition switch to ON position. • Test voltage at A/C relay connector terminal D (A/C control signal) • Is voltage **approximately B+**?	Yes	Go to next step.
		No	Repair wiring harness between fuse block and A/C relay, then go to Step 28.

STEP	INSPECTION		ACTION
*26	**INSPECT A/C RELAY (SWITCH-SIDE)** • Inspect A/C relay. • Is it okay?	Yes	Install A/C relay, go to next step.
		No	Replace A/C relay, then go to Step 28.
*27	**VERIFY WHETHER MALFUNCTION IS IN MAGNETIC CLUTCH OR WIRING HARNESS (BETWEEN A/C RELAY AND MAGNETIC CLUTCH FOR CONTINUITY)** • Test voltage at magnetic clutch connector terminal A (A/C control signal). • Is voltage **approximately B+**?	Yes	Inspect magnetic clutch, then go to next step.
		No	Repair wiring harness between A/C relay and magnetic clutch, then go to next step.
28	**VERIFY THAT MALFUNCTION SYMPTOM OCCURS AFTER REPAIR** • Does cool air blow out? (Is refrigerant system performance test result correct?)	Yes	Troubleshooting completed. Explain repairs to customer.
		No	Recheck malfunction symptoms, then repeat from Step 1 if malfunction recurs.

End Of Sie

NO.3 NOISE WHILE OPERATING A/C SYSTEM

AME858001038W05

3	Noise while operating A/C system
DESCRIPTION	• Noise from magnetic clutch, A/C compressor, hose or refrigerant line.
POSSIBLE CAUSE	• Magnetic clutch operation noise (Step 3) • A/C compressor operation noise (Steps 4—8) • A/C compressor slippage noise (Steps 9—11) • Hose or refrigerant line interference noise (Step 12)

Diagnostic procedure

STEP	INSPECTION		ACTION
1	**INSPECT A/C COMPRESSOR SLIPPAGE NOISE** • Is there a squeaking or whirling sound (A/C compressor slippage noise)?	Yes	Go to Step 9.
		No	Go to next step.
2	**INSPECT A/C COMPRESSOR INTERFERENCE NOISE** • Is there a rattling or vibrating sound (interference noise)?	Yes	Go to Step 12.
		No	Go to next step.
3	**INSPECT MAGNETIC CLUTCH OPERATION NOISE** • Is there clicking sound (magnetic clutch operation noise)?	Yes	Adjust clearance between magnetic clutch pressure plate and A/C compressor pulley, then go to Step 13.
		No	Go to next step.
4	**INSPECT A/C COMPRESSOR NOISE TIME** • Is noise heard continuously for **more than 3 seconds** after A/C compressor comes on?	Yes	Go to next step.
		No	Condition is normal. (Noise normally occurs for **2–3 seconds** immediately after A/C compressor turns on.)
5	**INSPECT IDLE SPEED** • Inspect idle speed. — AJ: (See F3–49 IDLE SPEED INSPECTION) — L3: (See F4–58 IDLE SPEED INSPECTION) — MZR-CD (RF Turbo): (See F5–64 IDLE SPEED INSPECTION) • Is it okay?	Yes	Adjust idle speed, then go to Step 13.
		No	Go to next step.
6	**VERIFY WHETHER MALFUNCTION IS IN COMPRESSOR OIL OR A/C COMPRESSOR** • Drain compressor oil. • Is it contaminated with metal particles?	Yes	Replace A/C compressor, then go to Step 13.
		No	Go to next step.
7	**VERIFY WHETHER MALFUNCTION IS IN ENTIRE A/C SYSTEM OR A/C COMPRESOR AND CONDENSER** • Is compressor oil whitish and mixed with water?	Yes	Replace entire A/C system (excluding heater), then go to Step 13.
		No	Go to next step.
8	**INSPECT COMPRESSOR OIL** • Is compressor oil darker than normal and contaminated with aluminum chips?	Yes	Replace A/C compressor and condenser, then go to Step 13. (Since A/C compressor may be worn and receiver/drier may be clogged, replacement of condenser is necessary.)
		No	Condition is normal. Recheck malfunction symptoms.

STEP	INSPECTION		ACTION
9	**INSPECT DRIVE BELT** • Inspect drive belt. — AJ: — L3: (See B3–25 DRIVE BELT INSPECTION) — MZR-CD (RF Turbo): (See B4–12 DRIVE BELT INSPECTION) • Is it okay?	Yes	Go to next step.
		No	Replace drive belt, then go to Step 13.
10	**INSPECT DRIVE BELT CONDITION** • Is drive belt worn? • Does it have foreign material imbedded in it, or have oil on it?	Yes	Remove obstruction, remove oil, or replace drive belt, then go to Step 13.
		No	Go to next step.
11	**INSPECT MAGNETIC CLUTCH** • Inspect magnetic clutch. ☞ U–16 MAGNETIC CLUTCH INSPECTION • Is it okay?	Yes	Replace A/C compressor (excluding pressure plate, A/C compressor pulley, and stator), then go to Step 13.
		No	Replace magnetic clutch, then go to Step 13.
12	**INSPECT A/C COMPRESSOR NOISE** • Is noise coming from A/C compressor?	Yes	Visually inspect A/C compressor, replace appropriate parts if necessary, then go to next step.
		No	If noise is coming from refrigerant lines, repair any detached or missing clips, tighten loose bolts, then go to next step.
13	**VERIFY THAT MALFUNCTION SYMPTOM OCCURS AFTER REPAIR** • Has A/C compressor noise stopped?	Yes	Troubleshooting completed. Explain repairs to customer.
		No	Recheck malfunction symptoms, then repeat from Step 1 if malfunction recurs.

End Of Ste

TECHNICAL DATA

TECHNICAL DATA TD-2
ENGINE TD-2
LUBRICATION SYSTEM TD-2
COOLING SYSTEM TD-3
FUEL AND EMISSION CONTROL SYSTEMS TD-4
ENGINE ELECTRICAL SYSTEM TD-5
CLUTCH TD-6
MANUAL TRANSAXLE TD-6
AUTOMATIC TRANSAXLE TD-7
FRONT AND REAR AXLE TD-7
STEERING SYSTEM TD-8
BRAKE TD-8
SUSPENSION TD-8
BODY ELECTRICAL SYSTEM TD-10
HEATER AND AIR CONDITIONER SYSTEMS TD-10

TECHNICAL DATA

ENGINE

AME931001001W01

Item			Engine		
			L3	AJ	MZR-CD(RF Turbo)
Valve clearance	(mm {in} [Engine cold])	IN	0.22—0.28 {0.0087—0.0110} (0.25±0.03 {0.0098±0.0011})	–	0.12—0.18 {0.005—0.007} (0.15±0.03 {0.006±0.001})
		EX	0.27—0.33 {0.0106—0.0130} (0.30±0.03 {0.0118±0.0011})	–	0.32—0.38 {0.013—0.014} (0.35±0.03 {0.014±0.001})
Compression pressure	(kPa {kgf/cm^2, psi})	Standard	1,530 {15.6, 221.8} [300 rpm]	Compression pressure of lowest cylinder must be within 75% of highest	3,500 {35.7, 507.7} [250 rpm]
		Minimum	1,070 {10.9, 155.0} [300 rpm]	–	3,100 {31.6, 449.4} [250 rpm]
		Maximum difference between cylinders	196.1 {2.0, 28}	–	196 {2.0, 28}
Cylinder head bolt length	(mm {in})	Standard	149.0—150.0 {5.867—5.905}	–	159.7—160.3 {6.288—6.311}
		Minimum	150.5 {5.965}	–	161.0 {6.338}
Pushing distance of the front oil seal (from the edge of the engine front cover)	(mm {in})		0—0.5 {0—0.019}	0—1.0 {0—0.040}	0—0.5 {0—0.019}
Pushing distance of the rear oil seal (from the edge of the cylinder block)	(mm {in})		–	0—2.0 {0—0.078}	0—0.5 {0—0.019}
Pushing distance of the camshaft oil seal	(mm {in})		–	2.5—3.0 {0.10—0.11} (from the edge of the camshaft oil seal housing)	0.5—1.5 {0.020—0.059} (from the edge of the cylinder head)
Auto tensioner rod projection	(mm {in})		–	–	12.9—14.6 {0.508—0.574}

End Of Sec

LUBRICATION SYSTEM

AME931001001W02

Note

- The maintenance intervals on scheduled maintenance table (See GI–10 Scheduled maintenance table) can only be supported by the use of following oils.

Item		Specification		
		L3	AJ	MZR-CD (RF Turbo)
Oil pressure (Approximate pressure)	(kPa {kgf/cm^2, psi} [rpm])	300—549 {3.1—5.6, 44—80} [3,000]	138—310 {1.4—3.2, 20—45} [1,500]	147 {1.5, 21} min. [1,000] 343 {3.5, 50} min. [3,000]
Oil capacity (Approximate quantity)	Total (Dry engine) (L {US qt, Imp qt})	4.2 {4.4, 3.7}	5.7 {6.0, 5.0}	5.5 {5.8, 4.8}
	Oil replacement (L {US qt, Imp qt})	3.1 {3.3, 2.7}	4.7 {5.0, 4.1}	4.8 {5.1, 4.2}
	Oil and oil filter replacement (L {US qt, Imp qt})	3.5 {3.7, 3.1}	5.2 {5.5, 4.6}	5.0 {5.3, 4.4}

Item			Specification					
			L3		AJ	MZR-CD (RF Turbo)		
Engine oil	Grade	API Service	SJ	SL	SH, SJ, SL	CF-4	CF-4	CD, CE, CF-4
		ILSAC	–	GF-3	GF-2, GF-3	–	–	–
		ACEA	A1 or A3	–	–	B1 or B3	B3	B3 or B4
	Viscosity (SAE)		5W-30	5W-20	5W-20, 5W-30, 10W-30	5W-30	10W-40	5W-30, 10W-30
	Remarks		Mazda genuine DEXELIA oil	–	–	Mazda genuine DEXELIA oil		–

End Of Sie

COOLING SYSTEM

AME931001001W03

Item			Engine		
			L3	AJ	MZR-CD (RF Turbo)
Coolant capacity (Approximate quantity) (L {US qt, Imp qt})		Australian spec	–	With rear heater: 12.0 {12.7, 10.6} Without rear heater: 10.2 {10.8, 9.0}	–
		General (L.H.D. R.H.D), Israeli specs		With rear heater: 12.4 {13.1, 10.9} Without rear heater: 10.6 {11.2, 9.3}	
		European (L.H.D. R.H.D.) specs	With rear heater: 10.5 {11.1, 9.2} Without rear heater: 8.8 {9.3, 7.7}	–	With rear heater: 10.7 {11.3, 9.4} Without rear heater: 8.6 {9.1, 7.6}
Radiator cap	Cap valve opening pressure (kPa {kgf/cm^2, psi})		94—122 {0.95—1.25, 13.6—17.7}		
Thermostat	Type		Wax, bottom-bypass		
	Initial-opening temperature (°C {°F})		80—84 {176—183}	84—88 {183—190}	80—84 {176—183}
	Full-opening temperature (°C {°F})		97{206}	99{210}	95{203}
	Full-open lift (mm {in})		more than 8.0{0.31}	more than 7.3{0.29}	more than 8.5{0.33}
Cooling fan	Type		Electric		
	Blade	Number	Main fan : 5, Additional fan: 7	Main fan: 4, Additional fan: 5	Main fan: 5, Additional fan: 7
		Outer diameter (mm {in})	320 {12.6}	340 {13.4}	320 {12.6}

End Of Sie

TD

FUEL AND EMISSION CONTROL SYSTEMS

AME931001001W04

Item		Engine	
		L3	AJ
Idle speed (rpm)		600—700 (650±50)	635—735 (685±50)
Ignition timing (BTDC°/rpm)		Approx. 8/650	Approx. 10/685
Idle-up speed*1	E/L*2 ON	600—700 (650±50)	635—735 (685±50)
	A/C ON	650—750 (700±50)	650—750 (700±50)
	P/S ON	650—750 (700±50)	650—750 (700±50)
CO concentration		Within the regulation	
HC concentration			
Fuel pressure (kPa {kgf/cm^2, psi}	Hold pressure	More than 200 {2.03, 29.0}	More than 176 {1.79, 25.5}
	Fuel leakage (drop/2 minutes)	Less than 1	
Fuel injector	Injection volume (ml {cc, fl oz}/15 sec.)	61—71 {61—71, 2.2—2.7}	49—65 {49—65, 1.7—2.1}
	Resistance (ohm) [20°C {68°F}]	11.4—12.6	13.1—14.5

*1 : Excludes temporary idle speed drop just after the electrical loads are turned on.
*2 : Blower motor is operating at high speed. Headlight switch is turned on. Rear window defroster switch is turned on. Cooling fans are operating.

Item		Engine
		MZR-CD (RF Turbo)
Idle speed (rpm)		725—825 (775±50)
Injection timing		–
Boost relief pressure	(kPa {mmHg, inHg})	Approx. –14.5
Idle-up speed (rpm)	When A/C is operated	725—825 (775±50)
	When P/S is operated	–
	When engine is cold	–
Fuel injection pump	Cam lift (mm {in})	–
Injection nozzle	Injection starting pressure (MPa {khf/cm^2, psi})	–
	Nossle leakage (MPa {khf/cm^2, psi})	–
Diesel smoke (%)		–

End Of Sie

ENGINE ELECTRICAL SYSTEM

AME931001001W05

Item					Engine		
					L3	AJ	MZR-CD (RF Turbo)
Battery	Electrolyte gravity				1.27—1.29		
	Back-up current*1 (mA)				Max. 20		
	Type				55D23L (48) 80D26L(55)*4 *5		95D31L (64) 115D31L (70)*4
	Test load chart (A)	Battery type	55D23L (48)		180		–
			80D26L (55)		195		–
			95D31L (64)		–		250
			115D31L (70)		–		320
	Slow charge (A)	Battery type (5-hour rate)	55D23L (48)		4.5—5.5		–
			80D26L (55)		5.5—6.5		–
			95D31L (64)		–		6.5—8.0
			115D31L (70)		–		7.0—8.5
	Quick charge (A/30 min)	Battery type (5-hour rate)	55D23L (48)		30		–
			80D26L (55)		35		–
			95D31L (64)		–		40
			115D31L (70)		–		45
Generator	Standard voltage (V)	Ignition switch (engine switch) ON	Terminal	B	B+		–
				P	Below approx. 1		–
				D	Approx. 0		–
				B	–		B+
				L	–		Approx. 1
				S	–		B+
		Idle [20 °C{68 °F}]	Terminal	B	13—15		–
				P	Approx. 3—8		–
				D	*3		–
				B	–		14.1—14.7
				L	–		14.1—14.7
				S	–		14.1—14.7
	Generated current*2 (Reference) (A)	Engine speed (rpm)		1,000	0—80	0—90	0—80
				2,000	0—100	0—105	0—90
Ignition coil	Resistance [20 °C {68 °F}]	Primary coil (ohm)			0.49—0.57	0.51—0.53	–
		Secondary coil (kilohm)			9.5—11.1	4.6—5.6	–
		Insulation resistance of case (Megohm)			Above 10		–
High-tension lead	Resistance (kilohm)	No.1 lead			9.84—22.96	–	
		No.2 lead					
		No.3 lead					
		No.4 lead					
Spark plug	Type	NGK			ITR6F-13	–	–
		Motorcraft			–	AGSF-32WM	–
Starter	No load test	Voltage (V)			11		
		Current (A)			Below 90		Below 130

*1 : Back-up current is the constant flow of current present (for the audio unit, clock, PCM, etc.) when the ignition switch (engine switch) is off and with the ignition key removed.
*2 : 0 A is not included.
*3 : Turn the following electrical loads on and verify that the voltage reading increases.
—Headlights, blower motor, and rear window defroster
*4 : Cold area
*5 : Except General (R.H.D.) specs.

TD

CLUTCH

AME931001024W01

Item				Specification	
Manual transaxle type				G15M-R	A65M-R
Clutch pedal	Height (with carpet)		mm {in}	231—236 {9.09—9.29} (Reference value)	
	Free play	Pedal free play	mm {in}	5.2—14 {0.20—0.55}	
		Push rod free play at clutch pedal	mm {in}	0.7—3.5 {0.02—0.13} (Reference value)	
	Disengagement point	Disengagement stroke	mm {in}	23—43 {0.91—1.69}	
		Pedal stroke	mm {in}	148 {5.83} (Reference value)	
Clutch cover	Diaphragm spring fingers	Depth	mm {in}	0.6 {0.024}	
		Misalignment	mm {in}	0.6 {0.024}	
	Maximum clearance of flatness of the pressure plate		mm {in}	0.3 {0.012}	
Clutch disc	Minimum thickness		mm {in}	0.3 {0.012}	
	Run out limit		mm {in}	0.7 {0.028}	
Flywheel	Run out limit		mm {in}	0.1 {0.004}	0.3 {0.012}

MANUAL TRANSAXLE

AME931001024W02

Item		Specification
Manual transaxle type		A65M-R
Transaxle control		Floor-shift
Operation system		Cable
Shift assist		Synchromesh
Gear ratio	1st	3.416
	2nd	1.789
	3rd	1.193
	4th	0.902
	5th	0.659
	Reverse	3.252
Final gear ratio		4.133
Transaxle oil	Grade	API service GL-4 or GL-5
	Viscosity (All-season)	SAE 75W-90
	Capacity (approximate quantity) (L {US qt, Imp qt})	2.30 {2.4, 2.0}

AUTOMATIC TRANSAXLE

AME931001024W03

Item			Automatic transaxle type
			JA5A-EL
Line pressure (kPa {kgf/cm^2, psi})	D, S range	Idle	290—490 {3.0—5.0, 42—71}
		Stall	1,280—1,480 {13.1—15.1, 186—215}
	L range, R position	Idle	550—750 {5.6—7.6, 80—109}
		Stall	1,550—1,750 {15.8—17.8, 225—254}
Engine stall speed (rpm)	R, D, S, L		2,100—2,500
Time lag (second)	N-D		Approx. 0.5—1.0
	N-R		Approx. 0.6—1.1
Transaxle fluid temperature (TFT) sensor (kilohm)	-20 °C {–4 °F}		15.87—17.54
	0 °C {32 °F}		5.73—6.33
	20 °C {68 °F}		2.38—2.63
	40 °C {104 °F}		1.10—1.22
	60 °C {140 °F}		0.56—0.62
	80 °C {176 °F}		0.31—0.34
	100 °C {212 °F}		0.18—0.20
	120 °C {248 °F}		0.11—0.12
	130 °C {266 °F}		0.09—0.10
Input/turbine speed sensor (ohm)	ATF temperature: 20 °C {68 °F}		513—627
Intermediate sensor (ohm)	ATF temperature: 20 °C {68 °F}		513—627
Vehicle speedometer sensor (ohm)	ATF temperature: 20 °C {68 °F}		513—627
Solenoid valves (ohm)	Shift solenoid A		14—18
	Shift solenoid B		14—18
	Shift solenoid C		14—18
	Neutral shift solenoid valve		14—18
	Reduction timing solenoid valve		14—18
	TCC solenoid valve		12.0—13.2
	2-4 brake solenoid valve		2.6—3.2
	High clutch solenoid valve		2.6—3.2
	Pressure control solenoid		2.6—3.2
ATF	Type		M-III or equivalent (e.g. Dexron ® III)
	Capacity (Approximate quantity) (L {US qt, Imp qt})		9.7 {10.3, 8.5}

End Of Sie

FRONT AND REAR AXLE

AME931001018W01

Item			Specification		
ENGINE			**L3**	**AJ**	**MZR-CD (RF Turbo)**
Shaft length (Air in boot at atmospheric pressure)	(mm {in})	Left side	651.7—657.7 {25.66—25.89}	627.9—637.9 {24.73—25.11}	647.7—653.7 {25.50—25.73}
		Right side	601.7—607.7 {23.69—23.92}	565.9—575.9 {22.28—22.67}	571.7—577.7 {22.51—22.74}

End Of Sie

TD

STEERING SYSTEM

AME931001034W01

Item			Specification		
Engine			**L3**	**AJ**	**MZR-CD (RF Turbo)**
Steering gear	Gear housing fluid pressure (MPa {kgf·cm^2, psi})		8.23—8.92 {84.0—90.9, 1,200—1,290}		8.64—9.13 {88.2—93.1, 1,260—1,320}
Power steering oil pump	Oil pump fluid pressure (MPa {kgf·cm^2, psi})		8.23—8.92 {84.0—90.9, 1,200—1,290}		8.64—9.13 {88.2—93.1, 1,260—1,320}
Power steering system	Fluid	Type	ATF M-III or equivalent (e.g. Dexron®II)		
		Capacity* (Approximate quantity) (L {US qt, Imp qt})	L.H.D.: 1.09 {1.15, 0.96} R.H.D.: 1.04 {1.10, 0.92}	L.H.D.: 1.05 {1.11, 0.92} R.H.D.: 1.00 {1.06, 0.88}	L.H.D.: 0.96 {1.01, 0.84} R.H.D.: 0.90 {0.95, 0.79}

* : When reservoir tank is at maximum volume

End Of Sie

BRAKE

Item			Specification
CONVENTIONAL BRAKE SYSTEM			
Power brake unit	Fluid pressure (kPa {kgf/cm^2, psi})	At 0 kPa {0 mmHg, 0 inHg}	790 {8.06, 115} min.
		At 66.7 kPa {500 mmHg, 19.7 inHg}	8,830 {90.04, 1,280} min.
PARKING BRAKE SYSTEM			
Parking brake lever	Lever stroke when pulled at 98 N {10 kgf, 22 lbf} (notches)		4—5 (no drag)

End Of Sie

SUSPENSION

AME931001013W01

Suspension

Item		Fuel gauge indication				
		Empty	**1/4**	**1/2**	**3/4**	**Full**
Front wheel alignment (unloaded*1)	Camber angle*2	–0°12′±1°		–0°13′±1°		–0°14′±1°
	Caster angle*2	1°57′±1°	1°58′±1°	1°59′±1°	2°00′±1°	2°02′±1°
	Steering axis inclination (reference value)	11°08′	11°09′	11°10′	11°11′	

*1 : Engine coolant and engine oil are at specified levels. Spare tire, jack and tools are in designated positions.
*2 : Difference between left and right must not exceed 1°30'.

Wheels and Tires
European (L.H.D. U.K.), General (L.H.D.) specs.

Item					Specification		
Standard tire	Tire	Size			215/65R15 94H* (General (L.H.D.) specs.)	215/60R16 95H	
		Air pressure (kPa {kgf/cm^2, psi})	Front	Up to 4 persons	240 {2.4, 35}	240 {2.4, 35}	
				More than 4 persons to full load	250 {2.6, 37}	250 {2.6, 37}	
			Rear	Up to 4 persons	240 {2.4, 35}	240 {2.4, 35}	
				More than 4 persons to full load	290 {3.0, 43}	290 {3.0, 43}	
		Remaining tread	Standard tire (mm {oz})		1.6 {0.063}	1.6 {0.063}	
			Snow tire		50% of tread	50% of tread	
	Wheel	Size			15 x 6 JJ	16 x 6 1/2JJ	
		Material			Steel	Steel (MZR–CD (RF Turbo) and Israeli specs.)	Aluminum alloy
		Offset (mm {in})			50 {1.97}	50 {1.97}	
		Pitch circle diameter (mm {in})			114.3 {4.50}	114.3 {4.50}	
	Runout limit (mm {in})			Horizontal	2.5 {0.098}	2.5 {0.098}	2.0 {0.079}
				Vertical	1.5 {0.059}	1.5 {0.059}	
	Unbalance limit (at rim edge) (g {oz})				9 {0.32}	8 {0.28}	
	Wheel nut tightening torque (N·m {kgf·m, ft·lbf})				107.8—147.0 {11.00—14.98, 79.6—108.4}	107.8—147.0 {11.00—14.98, 79.6—108.4}	
Temporary spare tire (Karakuri models)	Tire	Size			T135/90D 15	T145/80D 16	
		Air pressure (kPa {kgf/cm^2,psi})			420 {4.2, 60}		
	Wheel	Size			15 x 4T	16 x 4T	
		Material			Steel		
		Offset (mm {in})			45 {1.77}		
		Pitch circle diameter (mm {in})			114.3 {4.50}		
	Wheel nut tightening torque (N·m {kgf·m, ft·lbf})				107.8—147.0 {11.00—14.98, 79.6—108.4}		

*: Applied VIN (Assumed) JM8 LW28A**# 200612—, JM8 LW28J**# 200612—

Australian, General (R.H.D.) specs.

Item					Specification	
Standard tire	Tire	Size			215/65R15 94H (Australian specs.)	215/60R16 95H
		Air pressure (kPa {kgf/cm^2, psi})		Front	240 {2.4, 35}	240 {2.4, 35}
				Rear		
		Remaining tread	Standard tire	(mm {oz})	1.6 {0.063}	1.6 {0.063}
			Snow tire		50% of tread	50% of tread
	Wheel	Size			15 x 6 JJ	16 x 6 1/2JJ
		Material			Steel	Aluminum alloy
		Offset		(mm {in})	50 {1.97}	50 {1.97}
		Pitch circle diameter		(mm {in})	114.3 {4.50}	114.3 {4.50}
	Runout limit			Horizontal	2.5 {0.098}	2.5 {0.098}
				Vertical	1.5 {0.059}	1.5 {0.059}
	Unbalance limit (at rim edge)			(g {oz})	8 {0.28}	8 {0.28}
	Wheel nut tightening torque			(N·m {kgf·m, ft·lbf})	107.8—147.0 {11.00—14.98, 79.6—108.4}	107.8—147.0 {11.00—14.98, 79.6—108.4}
Temporary spare tire	Tire	Size			T135/90D 15 (for Singapore)	T145/80D 16 (for Hong Kong)
		Air pressure		(kPa {kgf/cm^2,psi})	420 {4.2, 60}	
	Wheel	Size			15 x 4T (for Singapore)	16 x 4T (for Hong Kong)
		Material			Steel	
		Offset		(mm {in})	45 {1.77}	
		Pitch circle diameter		(mm {in})	114.3 {4.50}	
	Wheel nut tightening torque			(N·m {kgf·m, ft·lbf})	107.8—147.0 {11.00—14.98, 79.6—108.4}	

*: Applied VIN (Assumed) JM0 LW10J200 200702—

End Of Sie

BODY ELECTRICAL SYSTEM

AME931001047W01

Item			Specifications
Exterior light bulb capacity	(W)	Back-up light	18× 1
		Taillight	5× 1
Warning and indicator light bulb capacity	(W)	Glow indicator light	2 × 1
		Sedimender indicator light	2 × 1
		TCS indicator light	2 × 1
		TCS OFF light	2× 1

End Of Sie

HEATER AND AIR CONDITIONER SYSTEMS

AME931001038W01

Item			Specification
REFRIGERANT SYSTEM			
Refrigerant	Type		R–134a
	Regular amount (g {oz})	Twin A/C	800 {28.2}
		Single A/C	600 {21.2}

End Of Sie

SPECIAL TOOLS

SPECIAL TOOLS ST-2
ENGINE ST-2
LUBRICATION SYSTEM ST-3
COOLING SYSTEM ST-3
FUEL AND EMISSION CONTROL SYSTEMS ST-4
CLUTCH ST-4
MANUAL TRANSAXLE ST-4
AUTOMATIC TRANSAXLE ST-5
FRONT AND REAR AXLE ST-6
STEERING SYSTEM ST-7
BRAKE ST-8
SUSPENSION ST-8
BODY & ACCESSORIES ST-8

SPECIAL TOOLS

ENGINE

AME941001001W01

1: Mazda SST number
2: Global SST number

Example

1: 49 UN30 3009 2: 303-009 Crankshaft damper remover	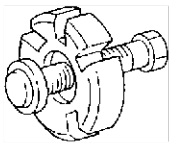

1:49 UN30 3464 2:303-464 Camshaft seal replacer (AJ)	1:49 UN30 3463 2:303-463 Camshaft seal protector (AJ)	1:49 UN30 3456 2:303-456 Water pump pulley plate (AJ)
1:49 UN21 1185 2:211-185 Pump pully replacer (AJ)	1:49 UN30 3009 2:303-009 Crankshaft damper remover (AJ)	1:49 UN01 002 2:303-102 Crankshaft damper replacer (AJ)
1:49 UN30 3335 2:303-335 Crankshaft seal installer/aligner (AJ)	1:49 D032 316 2:– Protractor (AJ, L3, MZR-CD (RF Turbo))	1: 49 L017 5A0 2:– Support hanger (AJ, L3, MZR-CD (RF Turbo))
1:49 E017 5A0 2:– Engine support (AJ, L3, MZR-CD (RF Turbo))	1:49 UN30 3457 2:303-457 Shaft protector (AJ)	1:49 UN30 3050 2:303-050 Engine lifting bracket (AJ)
1:49 G032 354 2:– Adjusting wrench (L3)	1:49 JE01 061 2:303–507 Peg (L3)	1:49 UN20 5072 2:205–072 Holder (L3)
1:49 UN20 507202 2:205–072–02 Adapter (L3)	1:49 JE01 054 2: 303–376 Plate (L3)	1:49 H010 401 2: – Oil seal installer (L3)

1:49 S120 710 2:– Coupling flange holder (MZR-CD (RF Turbo)) 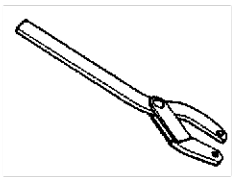	1:49 G033 107A 2:– Dust cover installer (MZR-CD (RF Turbo)) 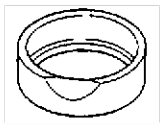	1:49 S120 215B 2:– Puller pulley (MZR-CD (RF Turbo)) 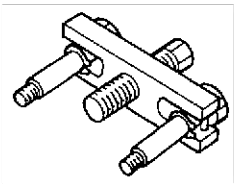
1:49 G011 106 2:– Camshaft pulley puller (MZR-CD (RF Turbo)) 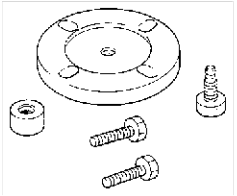	1:49 S013 1A1 2:– Compression gauge set (MZR-CD (RF Turbo)) 	1:49 B010 002 2:– Oil seal installer (MZR-CD (RF Turbo)) 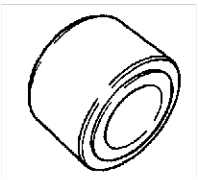
1:49 G012 0A0 2:– Tappet adjust wrench set (MZR-CD (RF Turbo)) 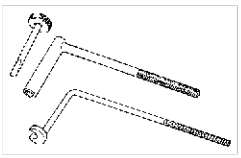	1:49 G011 105 2:– Crankshaft lock tool (MZR-CD (RF Turbo)) 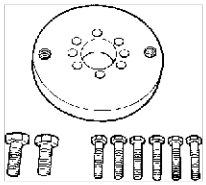	1:49 U027 003 2:– Oil seal installer (MZR-CD (RF Turbo)) 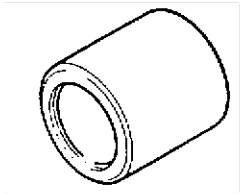

End Of Sie

LUBRICATION SYSTEM

AME941001001W02

49 0187 280A Oil pressure gauge (L3, MZR-CD (RF Turbo)) 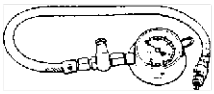	49 E019 001 Adapter (L3) 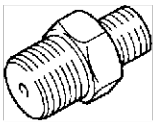	49 G032 354 Adjusting wrench (L3) 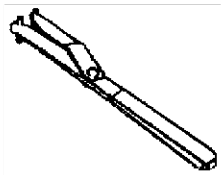
49 D032 316 Protractor (AJ) 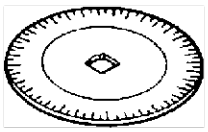	—	—

End Of Sie

COOLING SYSTEM

AME941001001W03

WDS 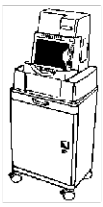	49 9200 145 Radiator cap tester adaper set (L3, MZR-CD (RF-Turbo)) 	—

End Of Sie

ST

FUEL AND EMISSION CONTROL SYSTEMS

AME941001001W04

49 UN01 052 Spring lock coupler tool (green) 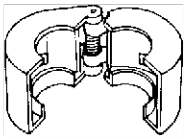	49 N013 1A0B Fuel pressure gauge 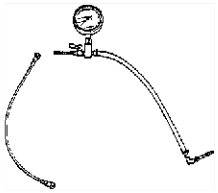	49 L018 001 O2 sensor wrench 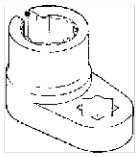
49 D015 001 Box wrench 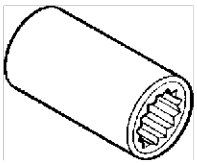	WDS 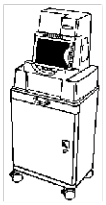	—

End Of Sie

CLUTCH

AME941001024W01

49 0259 770B Flare Nut Wrench 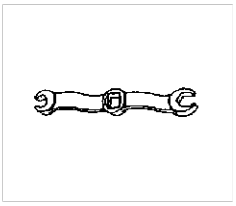	49 SE01 310A Clutch Disc Centering Tool 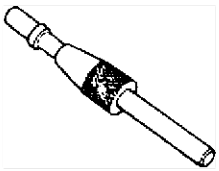	49 E011 1A0 Ring Gear Brake Set 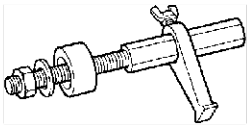

End Of Sie

MANUAL TRANSAXLE

AME941001024W02

49 E017 5A0 Engine Support Set 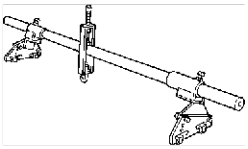	49 L017 5A0 Support Hunger Set 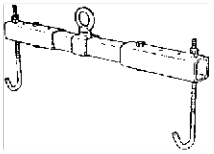	49 G030797 Handle
49 U027 003 Oil Seal Installer 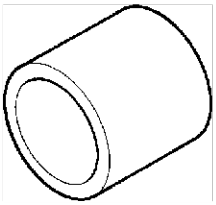	—	—

End Of Sie

AUTOMATIC TRANSAXLE

AME941001024W03

49 0378 400C Oil pressure gauge set 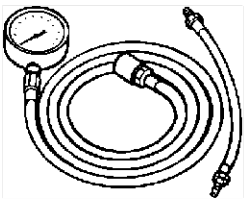	49 B019 901B Oil pressure gauge 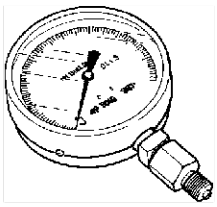	49 L019 014 Adapter
49 L019 016 Installer 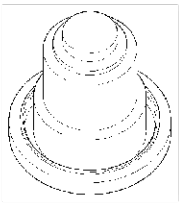	49 G030 797 Handle 	49 L019 013 Adapter 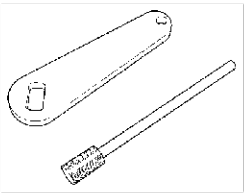
49 E011 1A0 Ring gear brake set 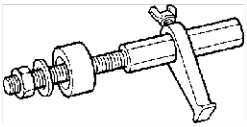	WDS 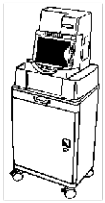	49 L017 5A0 Support hanger 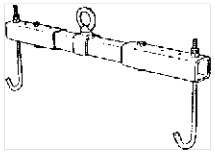
49 E017 5A0 Engine support 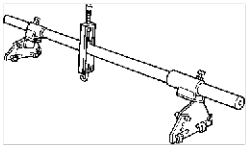	—	—

End Of Ste

ST

FRONT AND REAR AXLE

AME941001018W01

49 T028 3A0 Ball joint puller set 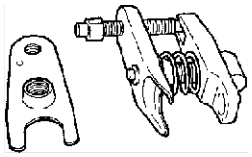	49 G030 455 Diff. side gear holder 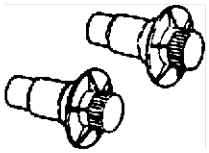	49 F026 102 Bearing installer 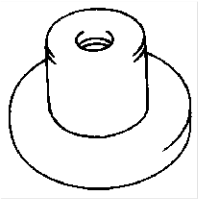
49 W034 301 Support block 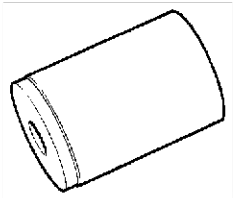	49 B014 001 Oil seal installer 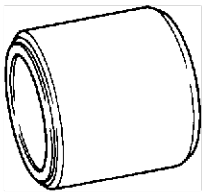	49 S231 626 Support block 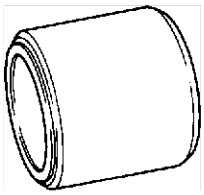
49 G030 797 Handle 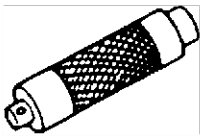	49 B025 004 Dust boot installer 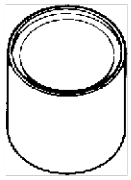	49 F027 005 Attachment ø62 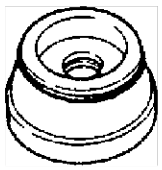
49 W027 003 Bearing installer 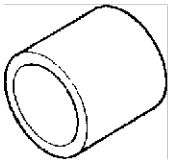	49 H025 001 Bearing installer 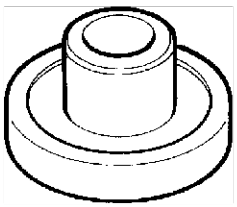	49 G026 103 Support block 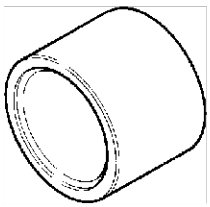
49 L025 002 Bearing installer 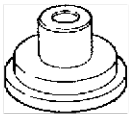	49 F027 009 Attachment ø68 & 77 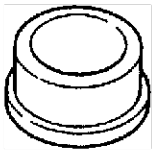	49 B018 003 Body B 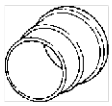
49 U027 003 Oil seal installer 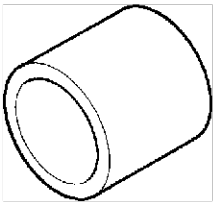	49 B025 006A Sensor rotor installer 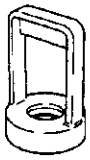	49 B025 009A Installer attachment 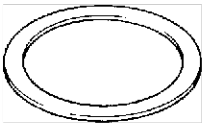
49 T025 001 Boot clamp crimper 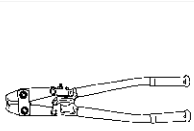	—	—

End Of Sta

STEERING SYSTEM

AME941001034W01

49 T028 3A0 Ball joint puller set 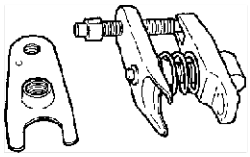	49 1232 670B Power steering gauge set 	49 1232 672A Gauge (Part of 49 1232 670B)
49 1232 673 Valve body (Part of 49 1232 670B) 	49 H002 671 Adapter 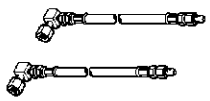	49 G032 3A4 Power steering gauge adapter set
49 G032 351 Adapter (Part of 49 G032 3A4) 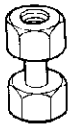	49 G032 352 Adapter (Part of 49 G032 3A4) 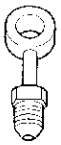	49 G032 353 Bolt (Part of 49 G032 3A4) 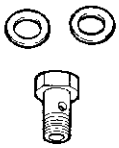
49 F032 301 Power steering pump hanger 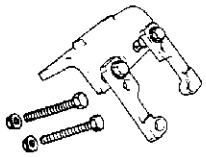	49 F032 3A2 Installer set 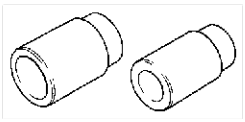	49 F032 320 Installer (Part of 49 F032 3A2) 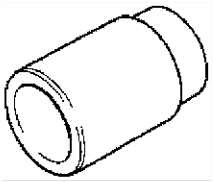
49 F032 321 Installer (Part of 49 F032 3A2) 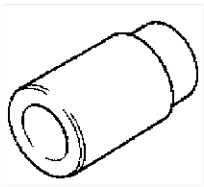	49 G030 665 Oil seal replacer 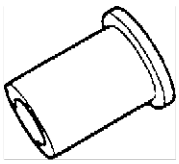	—

End Of Sta

ST

BRAKE

49 0259 770B Flare nut wrench 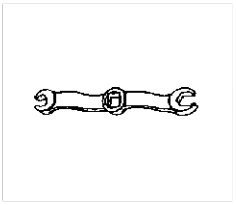	49 U043 0A0A Oil pressure gauge set 	49 U043 005 Joint (Part of 49 U043 0A0A) 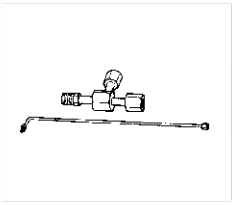
49 U043 004A Oil pressure gauge (Part of 49 U043 0A0A) 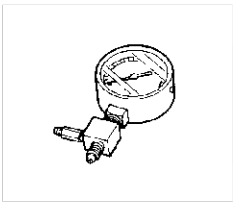	49 E043 003A Turning lock tool 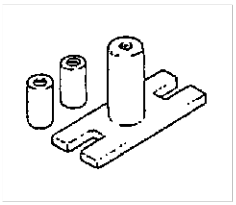	49 F043 001 Adjust gauge 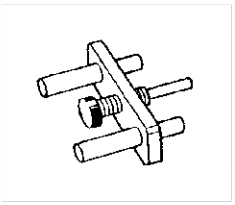
49 B043 004 Socket wrench 	49 G066 001 Adapter harness 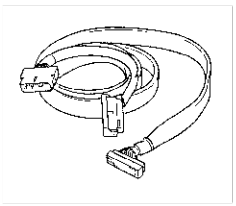	WDS 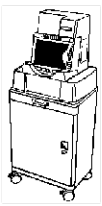

End Of Sie

SUSPENSION

49 L028 2A0 Rubber bushing replacer set 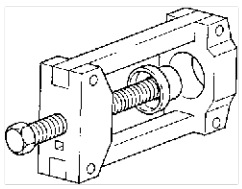	49 L028 201 Attachment (Part of 49 L028 2A0) 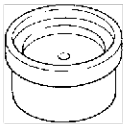	49 L028 202 Bolt (Part of 49 L028 2A0) 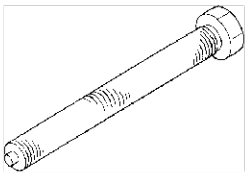
49 L028 203 Body (Part of 49 L028 2A0) 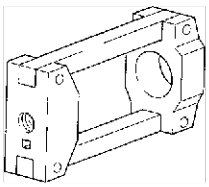	49 0259 770B Flare nut wrench 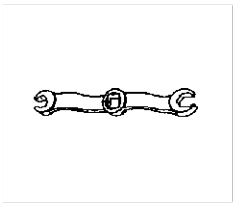	—

End Of Sie

BODY & ACCESSORIES

AME941001047W01

49 N088 0A0 Fuel and Thermometer checker (NEW) 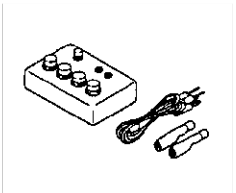	WDS 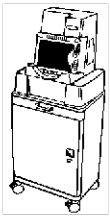	—

End Of Sie